Owner's manual **2027**

FE 501s

Item no.: 3402956en

FOR | PIONEERS

Dear Husqvarna Mobility-customer,

Congratulations on your decision to purchase a Husqvarna motorcycle. You are now the owner of a state-of-the-art sports vehicle which, with proper care, will bring you pleasure for a long time to come.

We hope you enjoy your bike and have a safe journey at all times!

You can enter the serial numbers of your vehicle below to find the serial numbers more quickly if required:

Vehicle identification number (p. 21)	Stamp of the contractual partner
Engine number (p. 21)	

The owner's manual contained the latest information for this model series at the time of publication. Slight deviations resulting from continuing development and design of the motorcycles cannot, however, be completely excluded.

All specifications are non-binding. Husqvarna Mobility GmbH specifically reserve the right to modify or delete technical specifications, prices, colors, forms, materials, services, designs, equipment, etc. without prior notice and without specifying reasons, to adapt these to local conditions, as well as to stop production of a particular model without prior notice. Husqvarna Mobility assumes no liability for delivery options, deviations from figures and descriptions, as well as misprints and other errors. The models portrayed partly contain special equipment that does not belong to the regular scope of supply.

© 2026 Husqvarna Mobility GmbH, Mattighofen Austria

All rights reserved. Figures: Visus Studios/INDG/Husqvarna Mobility

Written permission from the copyright owner is required before any duplication or reproduction.

ISO 9001

Husqvarna Mobility GmbH applies quality assurance processes that lead to the highest possible product quality as defined in the ISO 9001 international quality management standard.

12 100 6061

REG.NO. 12 100 6061

Issuing institution:

TÜV SÜD Management Service GmbH

Husqvarna Mobility GmbH
Stallhofnerstraße 3
5230 Mattighofen, Austria

This document is valid for:

FE 501s US (F2475427)

3402956en

02/09/2026

Table of contents

1 Means of representation 9

1.1 Conventions 9
1.1.1 Icons 9
1.1.2 Formatting 9
1.1.3 Abbreviations 9

2 Safety 10

2.1 Safety instructions 10
2.2 Reporting safety defects 10
2.3 Noise emission warranty 10
2.4 Operating noise warning 11
2.5 Manufacturer warranty for the exhaust monitoring system 11
2.6 Consumer rights 11
2.7 Warning against tampering with the machine 12
2.8 Safe use 12
2.9 Protective clothing 13
2.10 Work rules 13
2.11 Environment 13
2.12 Owner's manual 13
2.13 Use definition – intended use 14
2.14 Improper use 14
2.15 Safety markings on the motorcycle 15
2.15.1 Overview of labels 15
2.15.2 Label in detail 15

3 Important notes 17

3.1 Manufacturer's warranty, implied warranty 17
3.2 Auxiliary material, operating material 17
3.3 Spare parts, accessories 17
3.4 Service 17
3.5 Figures 17
3.6 Customer service 18

4 View of the vehicle 19

4.1 View of vehicle, left side (example) 19
4.2 View of vehicle, right side (example) 19

5 Serial number 21

5.1 Vehicle identification number 21
5.2 Type approval label 21
5.3 Key number 21
5.4 Engine number 21
5.5 Fork part number 22
5.6 Shock absorber part number 22

6 Controls 23

6.1 Clutch lever 23
6.2 Handbrake lever 23
6.3 Throttle grip 23
6.4 Horn button 23
6.5 Light switch 24
6.6 Turn signal switch 24
6.7 Electric starter 24
6.8 Kill switch 25
6.9 Overview of indicator lights 25
6.10 Ignition lock 25
6.11 Opening the fuel tank cap 26
6.12 Closing the fuel tank cap 26
6.13 Cold start button 27
6.14 Idle speed adjustment screw 27
6.15 Gear shift lever 28
6.16 Brake pedal 28
6.17 Side stand 28
6.18 Steering lock 29
6.19 Locking the steering 29
6.20 Unlocking the steering 30

7 Combination instrument 31

7.1 Combination instrument overview 31
7.2 activation and testing 31
7.2.1 Activating combination instrument 31
7.2.2 Display test 31
7.2.3 **WS** (wheel size) 32
7.3 Setting kilometers or miles 32
7.4 Setting the combination instrument 33
7.5 Setting the clock 33
7.6 Viewing the lap time 34
7.7 Display mode **SPEED** (speed) 34
7.8 Display mode **SPEED/H** (operating hours) 34
7.9 Setup menu 35
7.10 Adjusting the unit of measurement 36
7.11 Display mode **SPEED/CLK** (time) 36
7.12 Setting the clock 37
7.13 Display mode **SPEED/LAP** (lap time) 37
7.14 Viewing the lap time 38
7.15 Display mode **SPEED/ODO** (odometer) 38
7.16 Display mode **SPEED/TR1** (trip master 1) 39
7.17 Display mode **SPEED/TR2** (trip master 2) 39
7.18 Adjusting **TR2** (trip master 2) 40

7.19 Display mode **SPEED/A1** (average speed 1) 40
7.20 Display mode **SPEED/A2** (average speed 2) 41
7.21 Display mode **SPEED/S1** (stop watch 1) 41
7.22 Display mode **SPEED/S2** (stop watch 2) 42
7.23 Table of functions 42
7.24 Table of conditions and menu activation..... 44

8 Preparing for use 45

8.1 Notes on preparing for first use 45
8.2 Running in the engine 46
8.3 Starting performance of lithium-ion batteries at low temperatures 46
8.4 Preparing the vehicle for difficult operating conditions 47
8.5 Preparing the vehicle for rides on dry sand 47
8.6 Preparing the vehicle for rides on wet sand 48
8.7 Preparing for rides on wet and muddy surfaces 48
8.8 Preparing vehicle for rides at high temperature or slow speed 49
8.9 Preparing the vehicle for low temperatures or snow 49

9 Riding instructions 50

9.1 Checks and maintenance measures when preparing for use 50
9.2 Starting the vehicle 50
9.3 Starting off 51
9.4 Shifting, riding. 51
9.5 Braking 52
9.6 Stop, park 52
9.7 Transportation 53
9.8 Refueling 53

10 Service schedule 55

10.1 Service schedule 55

11 Tuning the chassis 58

11.1 Checking the basic chassis setting with the rider's weight 58
11.2 Compression damping of the shock absorber 58
11.3 Adjusting the low-speed compression damping of the shock absorber 58
11.4 Adjusting the high-speed compression damping of the shock absorber 59
11.5 Adjusting the rebound damping of the shock absorber 60
11.6 Measuring the dimension of the unloaded rear wheel 61
11.7 Checking the static sag of the shock absorber 62
11.8 Checking the rider sag of the shock absorber 62
11.9 Adjusting the preload for the shock absorber 63
11.10 Adjusting the rider sag 64
11.11 Checking the basic setting of the fork 65
11.12 Adjusting the compression damping of the fork 65
11.13 Adjusting the rebound damping of the fork 66
11.14 Handlebar position 66
11.15 Adjusting the handlebar position 67

12 Service work on the chassis 68

12.1 Raising the motorcycle with a lift stand 68
12.2 Removing the motorcycle from the lift stand 68
12.3 Bleeding the fork legs 68
12.4 Cleaning the dust boots of the fork legs 69
12.5 Removing the fork protector 70
12.6 Installing the fork protector 70
12.7 Removing the frame protector 70
12.8 Installing the frame protector 71
12.9 Removing the fork legs 71
12.10 Installing the fork legs 72
12.11 Removing the lower triple clamp 73
12.12 Installing the lower triple clamp 74
12.13 Checking the steering head bearing play 76
12.14 Adjusting the steering head bearing play 77
12.15 Lubricating the steering head bearing 78
12.16 Removing the front top fender 78
12.17 Installing the front top fender 79
12.18 Removing the shock absorber 79
12.19 Installing the shock absorber 81
12.20 Removing the seat 83

Table of contents

12.21 Mounting the seat 83
12.22 Removing air filter box cover 84
12.23 Installing air filter box cover 84
12.24 Removing the air filter 84
12.25 Installing the air filter 85
12.26 Cleaning the air filter and air filter box 85
12.27 Removing the right side fairing 86
12.28 Installing the right side cover 87
12.29 Removing the muffler 87
12.30 Installing muffler 88
12.31 clean spark arrestor 88
12.32 Changing the damping material on the main silencer 90
12.33 Removing the fuel tank 90
12.34 Installing the fuel tank 92
12.35 Checking the chain for dirt 94
12.36 Cleaning the chain 94
12.37 Checking the chain tension 95
12.38 Adjusting the chain tension 96
12.39 Checking the chain, rear sprocket, front sprocket, and chain guide 97
12.40 Checking the frame 99
12.41 Checking the swingarm 99
12.42 Checking the throttle cable routing 99
12.43 Checking the hand grip 100
12.44 Adjusting the basic position of the clutch lever 101
12.45 Checking/correcting the fluid level of hydraulic clutch 101
12.46 Changing the hydraulic clutch fluid 102
12.47 Removing the skid plate 103
12.48 Installing the skid plate 104

13 Brake system 105

13.1 Checking the free travel on the hand brake lever 105
13.2 Adjusting the free travel of the handbrake lever 105
13.3 Checking the brake discs 105
13.4 Checking the brake fluid level for the front brake 106
13.5 Adding brake fluid for the front brake 107
13.6 Checking that the brake pads of the front brake are secured 108
13.7 Changing the brake pads of the front brake 109
13.8 Checking the free travel of the brake pedal 111
13.9 Adjusting the basic position of the brake pedal 111
13.10 Checking the brake fluid level for the rear brake 112
13.11 Adding brake fluid for the rear brake 113
13.12 Checking that the brake pads of the rear brake are secured 114
13.13 Changing the rear brake pads 115

14 Wheels, tires 118

14.1 Removing the front wheel 118
14.2 Installing the front wheel 119
14.3 Removing the rear wheel 119
14.4 Installing the rear wheel 120
14.5 Checking the tire condition 121
14.6 Checking the tire pressure 122
14.7 Checking the spoke tension 123

15 Electrics 124

15.1 Removing the 12 V battery 124
15.2 Installing the 12 V battery 125
15.3 Charging the 12 V battery 126
15.4 Changing the main fuse 129
15.5 Removing the headlight mask with the headlight 129
15.6 Installing the headlight mask with the headlight 130
15.7 Changing the headlight bulb 130
15.8 Checking the headlight setting 131
15.9 Adjusting the headlight range 132
15.10 Changing the turn signal bulb 132
15.11 Combination instrument battery, changing 133
15.12 Diagnostic connector 134
15.13 OCU 134

16 Cooling system 135

16.1 Cooling system 135
16.2 Checking the frost protection and coolant level 135
16.3 Checking the coolant level 136
16.4 Draining the coolant 137
16.5 Refilling the coolant 137
16.6 Changing the coolant 138

17 Tuning the engine 140

17.1 Checking the play in the throttle cable 140
17.2 Adjusting the throttle cable play 140
17.3 Adjusting the characteristic map of the throttle response 141
17.4 Adjusting the idle speed 143
17.5 Teaching the throttle valve position 143
17.6 Checking the basic position of the gear shift lever 144
17.7 Adjusting the basic position of the gear shift lever 144

18 Service work on the engine 146

18.1 Changing the fuel screen 146
18.2 Checking the engine oil level 147
18.3 Changing the engine oil and oil filter, cleaning the oil screens 148
18.4 Adding engine oil 150

19 Cleaning, care 152

19.1 Cleaning the motorcycle 152
19.2 Checks and maintenance steps for winter operation 153

20 Storage 155

20.1 Storage 155
20.2 Preparing for use after storage 156

21 Troubleshooting 157

21.1 troubleshooting 157

22 Flash code 159

22.1 Flash codes 159

23 Technical specifications 162

23.1 Engine 162
23.1.1 Technical data - engine 162
23.1.2 Capacities - engine 163
23.2 Chassis 163
23.2.1 Technical data - chassis 163
23.2.2 Technical data - tires 164
23.2.3 Capacities - vehicle 164
23.3 Electrics 164
23.3.1 Battery 164
23.3.2 Fuses 164
23.3.3 Lamps 164
23.4 Fork 165
23.4.1 Technical data - fork 165
23.4.2 Capacities - fork 165
23.5 Shock absorber 166
23.5.1 Technical data - shock absorber 166
23.5.2 Capacities - shock absorber 166
23.6 Tightening torque 167
23.6.1 Engine tightening torques 167
23.6.2 Chassis tightening torques 170

24 Recycling 174

24.1 Recycling 174

Notes 175

A Technical terms 175

B Fuels 176

C Operating supplies 177

D Cleaning agents 179

E Icons 180

E.1 Symbol colors 180
E.1.1 Yellow and orange symbols 180

Index 181

1.1 Conventions

1.1.1 Icons

✓	Indicates a desired result (e.g. of a work step or a function).
✗	Indicates an undesired result (e.g. of a work step or a function).
	All work marked with this symbol requires specialist knowledge and technical understanding. Ensure that this work is carried out or supervised by trained personnel from an authorized contractual partner, and that any special tools required are used.
	Indicates a page reference.
	Indicates information with more details.
	Indicates a tip, e.g. to simplify work.
»	Indicates the result from a test step.
◀	Indicates the end of an activity, including any rework.

1.1.2 Formatting

Proprietary name	Indicates a proprietary name.
Name ®	Indicates a protected name.
Brand ™	Indicates a brand available on the open market.
Underlined terms	Refer to technical details of the vehicle or indicate technical terms that are explained in the glossary.

1.1.3 Abbreviations

2-pc.	two-part
Part no.	Part number
or	respectively
approx.	circa
etc.	et cetera
poss.	possibly/possible
if necessary	if necessary
cmpl.	complete
min.	at least
no.	number
no fig.	no figure
s.	see
among others	among others/not limited to
and the like	and the like
etc.	et cetera
cf.	compare
e.g.	for example

2.1 Safety instructions

Function of the safety instruction

Safety instruction brings attention to dangers when handling the product. Hazards are classified, named, described, and supplemented with information on how to avoid them.

- If there is a safety instruction before a list of instructions, the danger exists throughout the entire activity.
- If there is a safety instruction immediately before an instruction, the next step presents a danger.

Safety instruction layout

All safety instructions are identified by a signal word and a warning symbol. The combination of signal word and warning symbol determines the degree of danger.

DANGER
Indicates an imminent danger that leads to serious injury or death.

WARNING
Indicates a potentially imminent danger that could lead to serious injury or death.

CAUTION
Indicates a potentially imminent danger that can lead to minor or slight injuries.

NOTE
Indicates a situation that can lead to damage to the product or the product environment.

NOTE
Indicates a situation that can lead to environmental damage.

2.2 Reporting safety defects

If you believe that your vehicle has a defect which could cause an accident resulting in injury or death, you should immediately inform the National Highway Traffic Safety Administration (NHTSA) in addition to notifying Husqvarna Mobility North America, Inc.

If the NHTSA receives multiple similar complaints, it may open an investigation. and if it finds that a safety defect exists in a group of vehicles, it may order a recall and remedy campaign. However, NHTSA cannot become involved in individual problems between you, your contracting party, or Husqvarna Mobility North America, Inc.

You can contact the NHTSA via the toll-free “Auto Safety Hotline” on 1–888–327–4236, visit the www.nhtsa.dot.gov website, or write to: NHTSA Headquarters, 1200 New Jersey Avenue, SE, West Building, Washington, DC 20590, USA. You can also obtain other information about motor vehicle safety from the hotline.

2.3 Noise emission warranty

Husqvarna Mobility warrants that this exhaust system, at the time of sale, meets all applicable US EPA noise standards.

This manufacturer’s warranty extends to the first person who purchases this exhaust system for purposes other than resale, and to all subsequent buyers.

Warranty claims should be directed to:

Husqvarna Mobility North America, Inc., c/o KTM North America, Inc., Customer Support, 1119 Milan Ave., Amherst, OH 44001, USA

Phone: (440) 985–3553

www.husqvarna-motorcycles.com

Husqvarna Mobility North America, Inc., c/o KTM Canada, Inc., 8701 Rue SamuelHatt, Chambly, QC J3L 6V4, Canada

Phone: (450) 441–4451

www.husqvarna-motorcycles.com

2.4 Operating noise warning

This product should be checked for necessary repair or replacement parts if the motorcycle noise has increased significantly through use. Otherwise, the owner may become subject to penalties under the applicable ordinances.

2.5 Manufacturer warranty for the exhaust monitoring system

Husqvarna Mobility North America, Inc. guarantees that, at the time of sale, the exhaust monitoring system complies with all the standards of the US Environmental Protection Agency (EPA) and the California Air Resources Board (CARB).

This manufacturer warranty applies in respect of the first owner of the motorcycle and all subsequent owners.

Your exhaust monitoring system may include parts, such as the fuel injection system, ignition, catalytic converter, control units, hoses, connectors and other emission related assemblies, fuel tank, crankcase breather, fuel tank lid for vehicles with fuel evaporation monitoring, oil filler cap, pressure control valve, fuel/vapor separator, canister, ignition coils, ignition wire, capacitors and spark plugs, if a fault occurs before the first scheduled replacement; it may also include the hoses, fittings, and pipes that are used directly in these components.

If the warranty conditions are met, Husqvarna Mobility will repair your motorcycle for you free of charge, including diagnosis, parts and labor.

As the owner of the motorcycle, you are responsible for the required maintenance specified in the Owner's Manual.

Please note that Husqvarna Mobility is entitled to reject warranty claims if your motorcycle or a part fails due to misuse, negligence, an accident, participation in racing or similar events, improper service work, or unauthorized modifications.

Scope of the manufacturer's warranty

- Five (5) years or 30,000 kilometers (18,641 miles), whichever occurs first.

If you have any questions regarding the manufacturer warranty for the exhaust monitoring system, please address these to:

Husqvarna Mobility North America, Inc., c/o KTM North America, Inc., Customer Support, 1119 Milan Ave., Amherst, OH 44001, USA

Phone: (888) 985-6090

U.S. Environmental Protection Agency, 2000 Traverwood Drive, Ann Arbor, MI 48105, USA

California Air Resources Board, 1001 "I" Street, Sacramento, CA 95814, USA

2.6 Consumer rights

Warranty claims must be made to an authorized dealer. If you are not satisfied, please contact:

Husqvarna Mobility North America, Inc., c/o KTM North America, Inc., Customer Support, 1119 Milan Ave., Amherst, OH 44001, USA

Phone: (440) 985–3553

www.husqvarna-motorcycles.com

Husqvarna Mobility North America, Inc., c/o KTM Canada, Inc., 8701 Rue Samuel-Hatt, Chambly, QC J3L 6V4, Canada

Phone: (450) 441–4451

www.husqvarna-motorcycles.com

Different rights may apply, according to national or regional legislation.

2.7 Warning against tampering with the machine

Tampering with the noise control system is prohibited. Federal law prohibits the following acts or the causing thereof:

1. The removal or rendering inoperative by any person other than for purposes of servicing, repair, or replacement, of any device or element of design incorporated into any new vehicle for the purpose of noise control prior to its sale or delivery to the ultimate purchaser or while it is in use, or
2. the use of the vehicle after such device or element of design has been removed or rendered inoperative by any person.

Among those acts presumed to constitute tampering are the acts listed below:

1. Removing or drilling through rear mufflers, baffle plates, manifolds, or other components that conduct exhaust gases.
2. Removing or puncturing parts of the intake system.
3. Lack of proper maintenance.
4. Replacing moving parts of the vehicle, or parts of the exhaust system or intake system, with parts other than those specified by the manufacturer.

2.8 Safe use

DANGER

Danger of accidents A rider who is not fit to ride poses a danger to themself and to others.

– Do not operate the vehicle if you are not fit to ride due to alcohol, drugs, or medication.
– Do not operate the vehicle if you are physically or mentally incapable of doing so.

DANGER

Danger of poisoning Exhaust gases are toxic and inhaling them may result in unconsciousness and death.

– Always ensure that there is sufficient ventilation when running the engine.
– Use suitable exhaust extraction when starting or running the engine in an enclosed space.

WARNING

Danger of burns Some vehicle components become hot when the vehicle is operated.

– Do not touch any parts such as the exhaust system, radiator, engine, damper, or brake system before the vehicle parts have cooled down.
– Allow the vehicle parts to cool down before performing any work on the vehicle.

The vehicle should only be used when it is in perfect technical condition, for its intended purpose, and in a safe and environmentally-friendly manner.

An appropriate driver's license is needed to drive the vehicle on public roads.

Have any faults that impair safety immediately remedied by an authorized contractual partner.

Observe the information and warning stickers on the vehicle.

2.9 Protective clothing

WARNING

Risk of injury Missing or inadequate protective clothing increases the risk of injury.

- Wear appropriate protective clothing such as helmet, boots, gloves as well as pants and a jacket with protectors on all rides.
- Always wear protective clothing that is in good condition and meets the legal regulations.

2.10 Work rules

Unless specified otherwise, the ignition must be switched off during all work (models with ignition lock, models with transponder key) or the engine must be at a standstill (models without ignition lock or transponder key).

Special tools are required for some work. The tools are not part of the vehicle, but can be ordered using the number in parentheses. Example: bearing puller (15112017000)

Unless otherwise noted, normal conditions apply to all tasks and descriptions.

Ambient temperature	20 °C (68.0 °F)
Ambient air pressure	1,013 mbar (14.69 psi)
Relative air humidity	60 ±5 %

During assembly, use new parts to replace parts which cannot be reused (e.g. self-locking screws and nuts, expansion screws, seals, sealing rings, O-rings, pins, and lock washers).

A thread lock (e.g. **Loctite®**) is required for some screw connections. Observe the manufacturer's specific instructions for use.

If thread lock (e.g. **Precote®**) has already been applied to a new part, do not apply any additional thread lock.

After disassembly, clean the parts that are to be reused and check them for damage and wear. Replace damaged or worn parts.

After completing a repair or service, check the operating safety of the vehicle.

2.11 Environment

Handling the vehicle responsibly reduces the risk of conflict with other road users and the surrounding area. The future of motorcycling also depends on using motorcycles legally, being environmentally conscious and respecting the rights of others.

When disposing of used oil, other operating and auxiliary fluids, and used components, the laws and regulations of the respective country must be observed.

As motorcycles are not subject to the EU regulations governing the disposal of end-of-life vehicles, there are no legal regulations that pertain to the disposal of an end-of-life motorcycle. More information is available from the authorized contractual partner.

2.12 Owner's manual

Read this owner's manual carefully and in full before riding off for the first time. The owner's manual contains information and tips on how to operate, handle, and service your vehicle, as well as advice on optimum tuning and how to avoid injuries.

Tip

Store the owner's manual on your terminal device, for example, so that you can read it whenever you need to.

An authorized contractual partner will be happy to assist you if you are unsure.

The owner's manual is an important component of the vehicle. If the vehicle is sold, the owner's manual must be downloaded again by the new owner.

The owner's manual can be downloaded multiple times using the QR code or the link on the delivery certificate.

The owner's manual is also available for download from authorized contractual partners and on the Husqvarna Mobility website.

International Husqvarna Mobility website: https://www.husqvarna-motorcycles.com

A printed copy can be ordered from the following address.

Website for printed copy: https://print.ktm.com

2.13 Use definition – intended use

This vehicle has been designed and built to withstand the normal stresses and strains of offroad leisure use.

Note

This vehicle is homologated and approved for use on public roads.

No homologation-relevant components may be removed or modified.

2.14 Improper use

The vehicle may only be used as intended.

Improper use can result in danger to people, property and the environment.

Any use of the vehicle beyond the intended and defined use constitutes misuse.

Improper use includes the use of operating and auxiliary materials that do not meet the required specifications for the respective use.

2.15 Safety markings on the motorcycle

2.15.1 Overview of labels

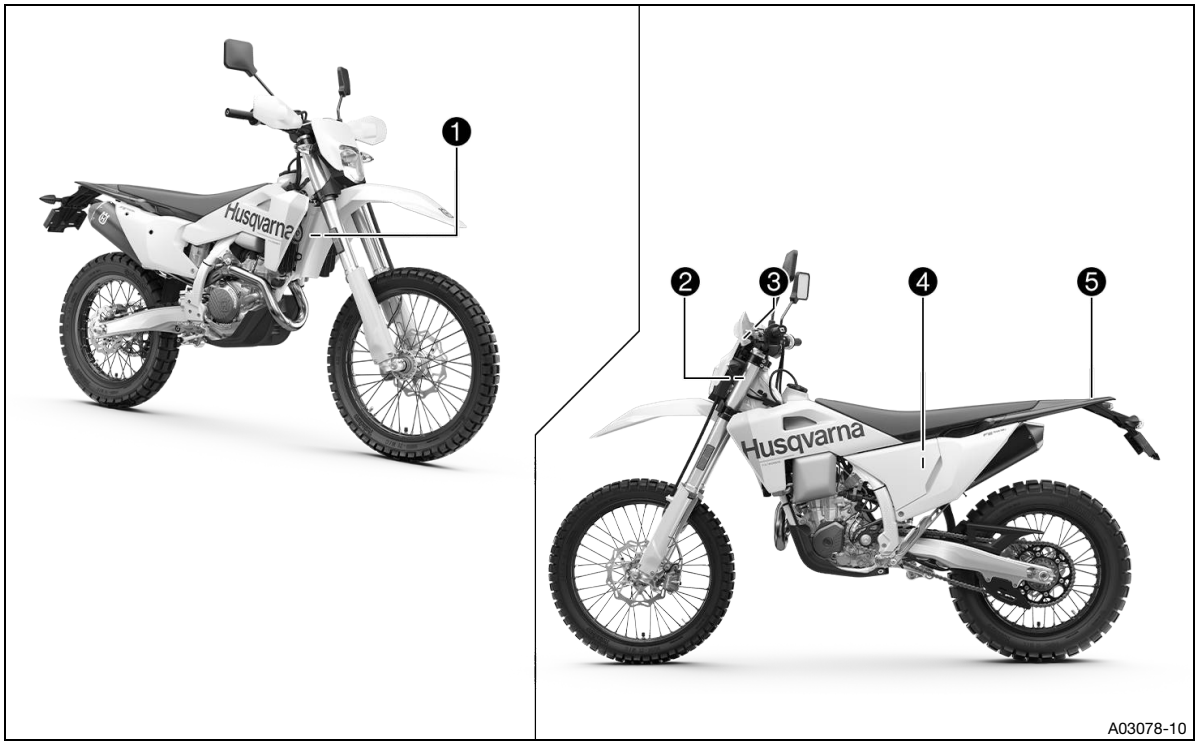

1. Type label USA/CAN
2. Information on noise emissions
3. Information on emissions control
4. Information on chain tension
5. Information on preparations for use

2.15.2 Label in detail

MANUFACTURED BY/FABRIQUÉ PAR: KTM AG AUSTRIA

GVWR / PNBV: 739 lbs 335 kg | Type: | Date: 09/26

WHEEL ROUE	GAWR / PNBE:		TIRE PNEU	RIM JANTE	COLD INFLATION PRESSURE PRESSION DE GONFLAGE À FROID		
	lbs	kg			psi/LPC	kPa	bar
FRONT/1st	320	145	90/90-21	1.60x21	29	200	2.0
REAR/2nd	419	190	140/80-18	2.15x18	29	200	2.0

THIS VEHICLE CONFIRMS TO ALL APPLICABLE U.S. FEDERAL MOTOR VEHICLE SAFETY STANDARDS IN EFFECT ON THE DATE OF MANUFACTURE SHOWN ABOVE

VIN/NIV: DUMMY*

THIS VEHCILE CONFIRMS TO ALL APPLICABLE STANDARDS PRESCRIBED UNDER THE CANADIAN MOTOR VEHICLE SAFETY REGULATIONS IN EFFECT ON THE DATE OF MANUFACTURE - CE VEHICULE EST CONFORME A TOUTES LES NORMES QUI LUI SONT, APPLICABLES EN VERTU DU RÉGLEMENT SUR LA SÉCURITÉ DES VÉHICULES AUTOMOBILES DU CANADA EN VIGUEUR À LA DATE DE SA FABRICATION

SAMPLE

A04004-10

Type label USA/CAN

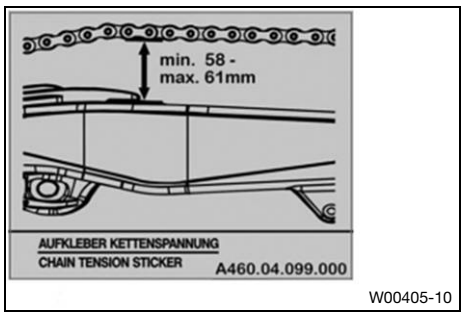

Information on chain tension

Information on preparations for use

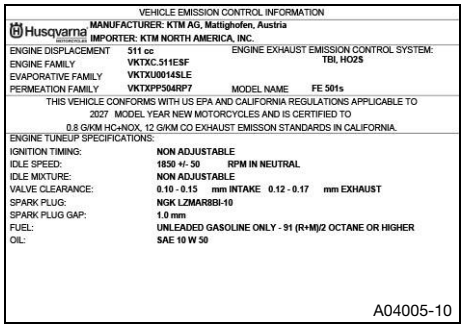

Information on emissions control

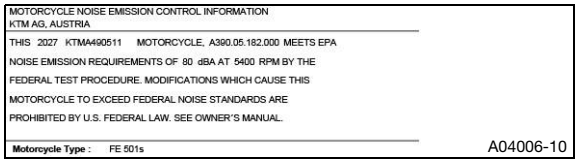

Information on noise emissions

3.1 Manufacturer's warranty, implied warranty

The work prescribed in the service schedule must only be carried out by an authorized contractual partner and then confirmed in the electronic proof of service, as otherwise all warranty claims will be void. Damage or secondary damage caused by tampering with and/or conversions on the vehicle are not covered by the manufacturer's warranty.

3.2 Auxiliary material, operating material

Use operating materials and auxiliary materials in accordance with the operating instructions and specifications.

3.3 Spare parts, accessories

For safety reasons, only spare parts and accessory products approved by Husqvarna Mobility may be used. They may only be installed by an authorized contractual partner. Husqvarna Mobility accepts no liability for other products and any resulting damage or loss.

Certain spare parts and accessory products are specified in parentheses in the descriptions. Authorized contractual partners will be happy to help.

The current accessories for your vehicle can be found on the Husqvarna Mobility website.

International Husqvarna Mobility website: https://www.husqvarna-motorcycles.com

3.4 Service

A prerequisite for perfect operation and prevention of premature wear is that the service, care, and tuning work on the engine and chassis is properly carried out as described in the owner's manual. An incorrect suspension setting can lead to damage and breakage of chassis components.

Use of the vehicle under arduous conditions, such as on sand or on wet, dusty and muddy surfaces, can result in significantly increased wear of components, such as the powertrain, brake system, air filter, or suspension components. For this reason, it may be necessary to inspect or replace parts before the next scheduled service interval.

Please adhere to the prescribed run-in times and service intervals at all times. Strictly adhering to this will ensure a much longer service life for your motorcycle.

The relevant mileage or time interval is whichever occurs first.

A list of services that have already been carried out on the vehicle can be found in the Service area on the international Husqvarna Mobility website:

International Husqvarna Mobility website: https://www.husqvarna-motorcycles.com

Authorized contractual partners will be happy to answer any questions regarding the services performed.

The list of authorized contractual partners is available on the Husqvarna Mobility website.

3.5 Figures

Some of the figures in this document contain optional extras.

For clarity, some components may be shown disassembled or may not be shown at all. Disassembly is not always absolutely necessary in order to carry out the activities described. The textual information takes precedence.

3.6 Customer service

Authorized contractual partners will be happy to answer questions about the vehicle and Husqvarna Mobility.
The list of authorized contractual partners is available on the Husqvarna Mobility website.
International Husqvarna Mobility website: https://www.husqvarna-motorcycles.com

4.1 View of vehicle, left side (example)

Note
Arrow faces in the direction of forward travel.

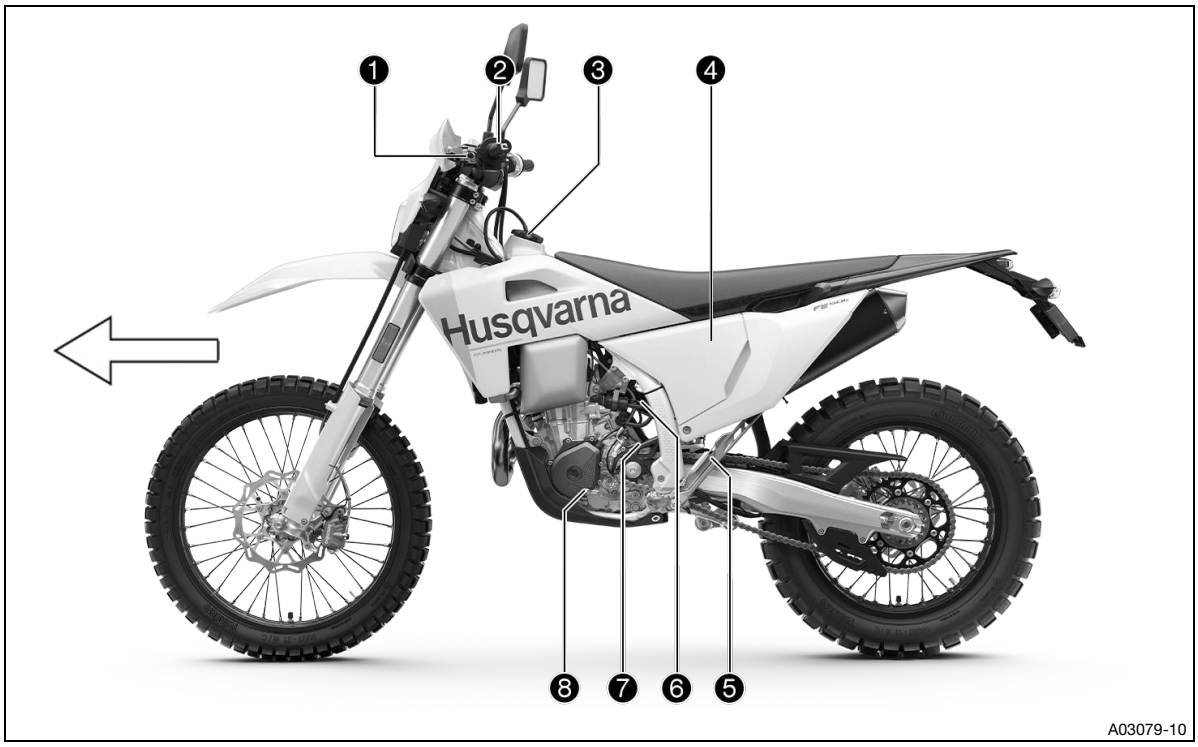

1. Clutch lever (p. 23)
2. Horn button (p. 23)
2. Light switch (p. 24)
2. Turn signal switch (p. 24)
3. Fuel tank cap
4. Air filter box cover
5. Side stand (p. 28)
6. Cold start button (p. 27)
7. Engine number (p. 21)
8. Gear shift lever (p. 28)

4.2 View of vehicle, right side (example)

Note
Arrow faces in the direction of forward travel.

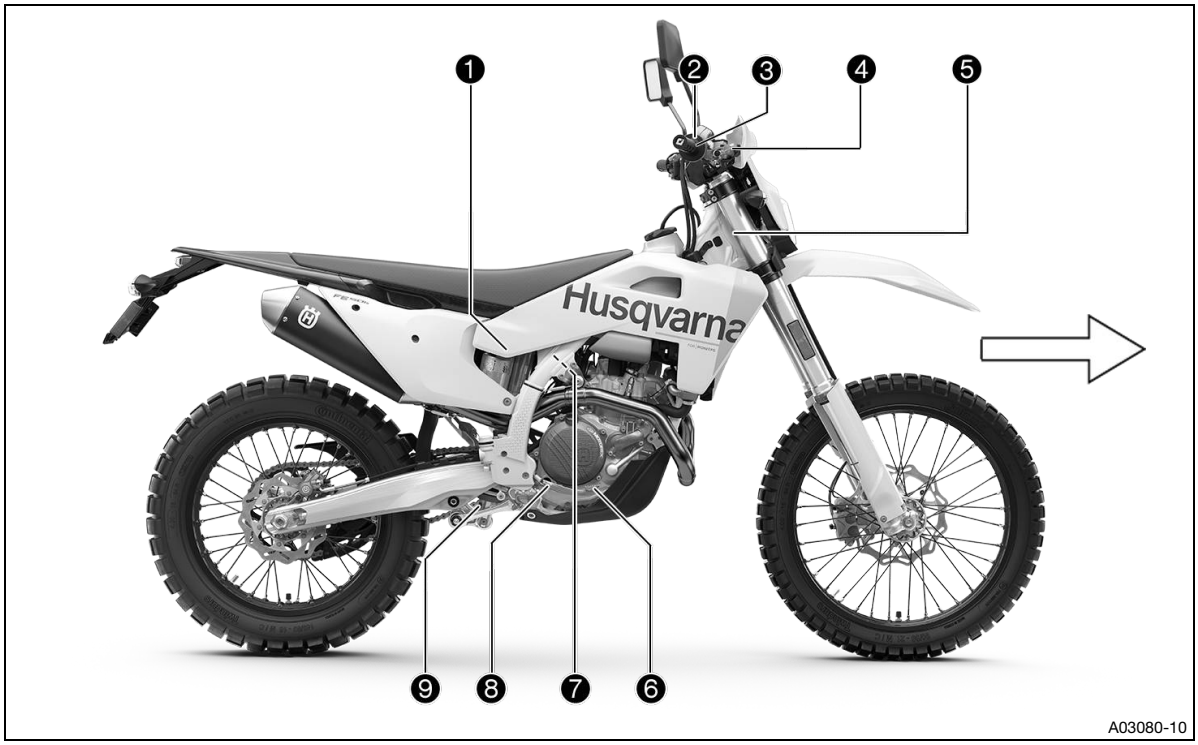

1. Shock absorber compression adjustment
2. Electric starter (p. 24)
3. Throttle grip (p. 23)
4. Handbrake lever (p. 23)
5. Vehicle identification number (p. 21)
6. Brake pedal (p. 28)
7. Idle speed adjustment screw (p. 27)
8. Level viewer, engine oil
9. Shock absorber rebound adjustment

5.1 Vehicle identification number

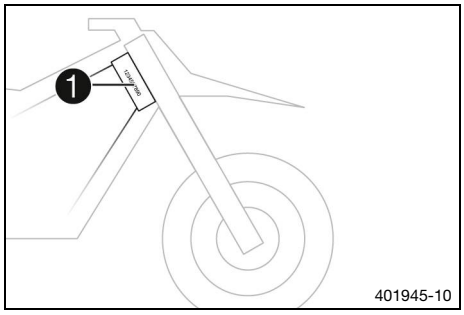

The vehicle identification number ❶ is stamped on the right side of the steering head.

The vehicle identification number is also shown on the type label.

5.2 Type approval label

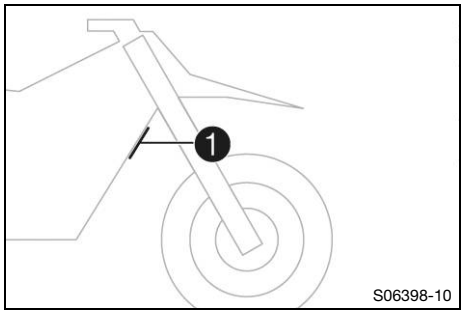

The type approval label for the USA and Canada ❶ is fixed to the front of the frame breast pipe.

5.3 Key number

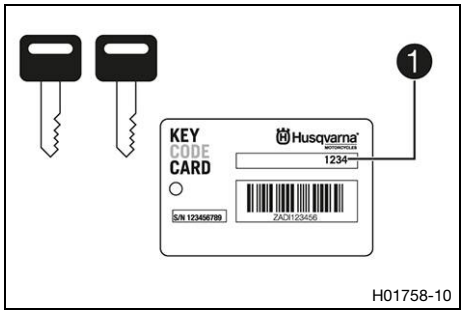

Key number ❶ for the ignition and steering lock is indicated on the **KEYCODECARD**.

Note

You need the key number to order a spare key. Keep the **KEYCODECARD** in a safe place.

5.4 Engine number

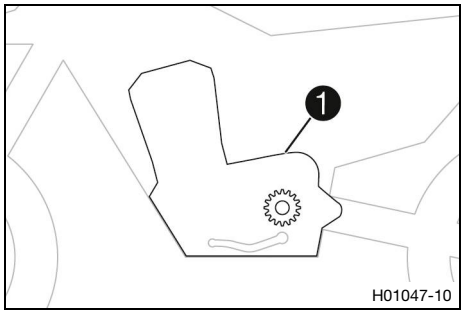

The engine number ❶ is stamped on the left side of the engine above the front sprocket.

5.5 Fork part number

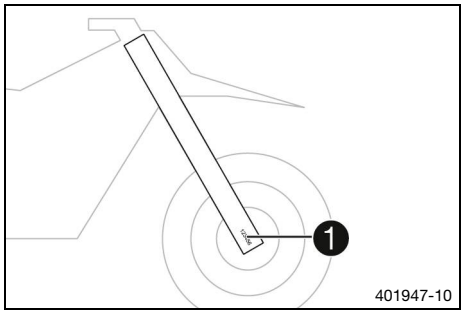

Fork part number ❶ is stamped on the inside of the fork shoe.

5.6 Shock absorber part number

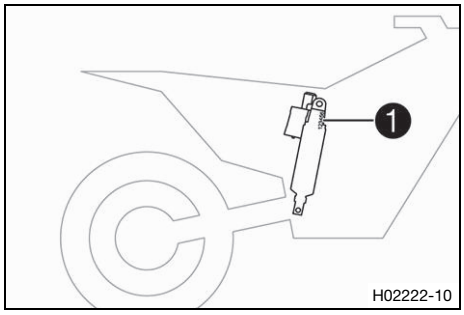

Shock absorber part number ❶ is stamped on the top of the shock absorber above the adjusting ring towards the engine side.

6.1 Clutch lever

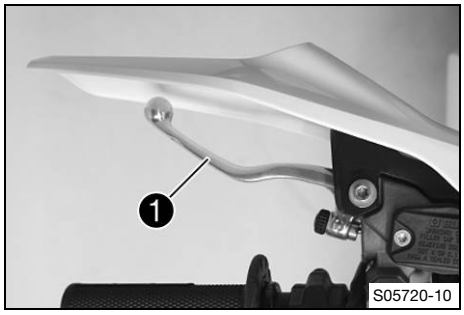

Clutch lever ❶ is fitted on the left side of the handlebar.
The clutch is activated hydraulically and adjusts itself automatically.

6.2 Handbrake lever

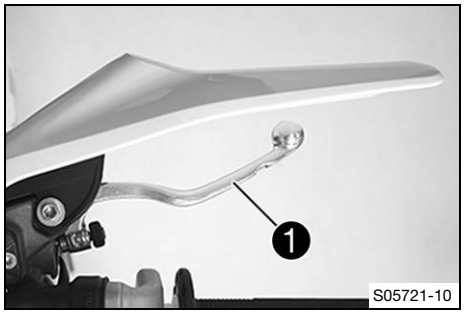

Hand brake lever ❶ is fitted on the right side of the handlebar.
The front brake is engaged using the hand brake lever.

6.3 Throttle grip

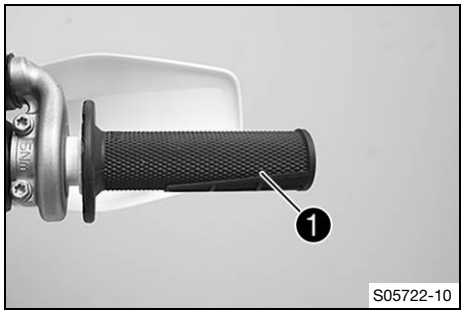

The throttle twist grip ❶ is fitted on the right side of the handlebar.

6.4 Horn button

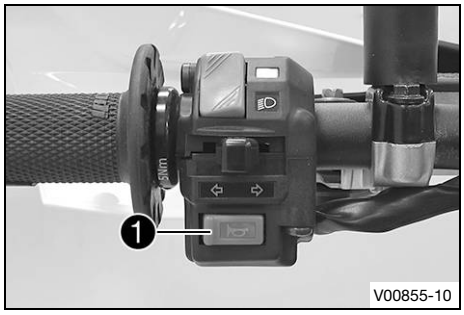

Horn button ❶ is fitted on the left side of the handlebar.

Condition	Meaning
Horn buttons in the basic position	No function
Horn buttons pressed	The horn is operated in this position.

6.5 Light switch

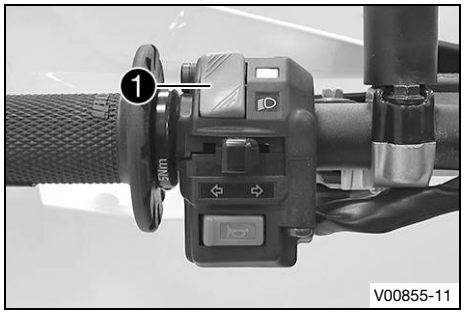

Light switch ❶ is fitted on the left side of the handlebar.

Condition		Meaning
	High/low beam switch is pressed down.	In this position, the dipped beam and the tail light are switched on.
	High/low beam switch is pushed up.	In this position, the high beam and the tail light are switched on.

6.6 Turn signal switch

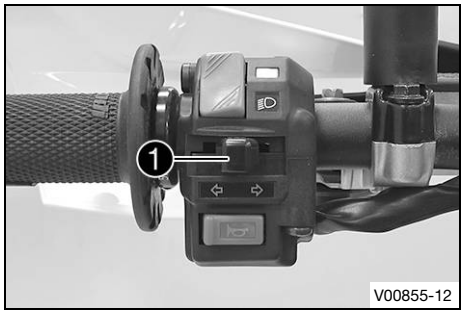

Turn signal switch ❶ is fitted on the left side of the handlebar.
To switch off the turn signal, press the turn signal switch towards the switch case.

Condition		Meaning
	Turn signal switch pressed to the left	Left turn signal on.
	Turn signal switch pressed to the right	Right turn signal on.

Note
The turn signal switch returns automatically to the central position after use.

6.7 Electric starter

Electric starter ❶ is fitted on the right side of the handlebar.

Condition	Meaning
Electric starter in the basic position	No function.
Electric starter pressed	In this position, the starter motor is actuated.

6.8 Kill switch

Stop button ❶ is located on the right side of the handlebar.

Condition	Meaning
Kill button ⊗ is not pressed.	In this position, the ignition circuit is closed, and the engine can be started.
The kill button ⊗ is pressed and held.	In this position, the ignition circuit is interrupted, a running engine stops, and an engine at standstill will not start.

6.9 Overview of indicator lights

Condition		Meaning
Fi	Malfunction indicator lamp lights up/flashes yellow	The **OBD** has detected an error in the vehicle electronics. Come safely to a halt, and contact an authorized dealer.
⛽	The fuel level warning lamp lights up yellow	The fuel level has reached the reserve mark.

6.10 Ignition lock

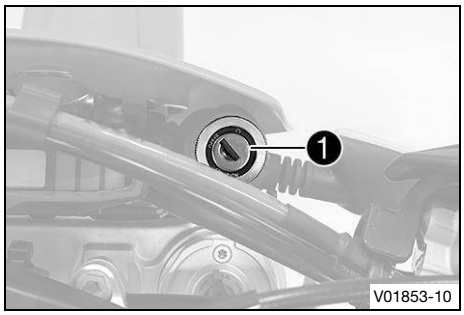

Ignition lock ❶ is located to the right of the combination instrument.

6.11 Opening the fuel tank cap

DANGER

Fire hazard Fuel is highly flammable.

The fuel in the fuel tank expands when warm and can escape if overfilled.

- Do not refuel the vehicle in the vicinity of open flames, glowing, or smoldering objects.
- Make sure that nobody smokes in the vicinity of the vehicle during the refueling process.
- Switch off the engine for refueling.
- Make sure that no fuel is spilled; particularly not on hot parts of the vehicle.
- If any fuel is spilled, wipe it up immediately.
- Do not overfill the fuel tank.

WARNING

Danger of poisoning Fuel is harmful to health.

- Do not allow fuel to come into contact with skin, eyes, or clothing.
- Consult a doctor immediately if fuel has been ingested.
- Do not inhale fuel vapors.
- Rinse the affected area immediately with plenty of water in the event of contact with skin.
- Rinse eyes thoroughly with water and consult a doctor immediately if fuel comes into contact with eyes.
- If fuel spills on to your clothing, change the clothing.
- Store fuel properly in a suitable container and keep out of the reach of children.

NOTE

Environmental hazard Improper handling of fuel is dangerous to the environment.

- Do not allow fuel to enter the groundwater, the soil, or the sewage system.

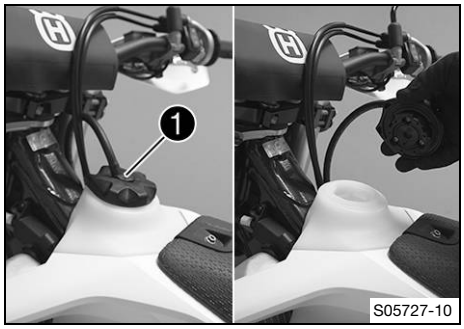

- Press release button ❶, turn the fuel tank cap counterclockwise, and lift it off.

6.12 Closing the fuel tank cap

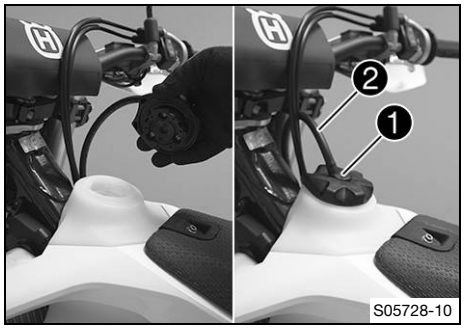

- Mount the fuel tank filler cap and turn it clockwise until release button ❶ engages.

Route hose of fuel tank vent ❷ without kinks.

6.13 Cold start button

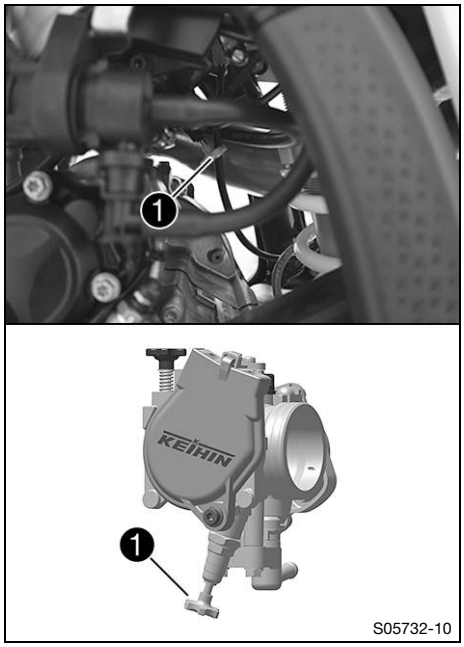

The cold start button ❶ is fitted to the bottom of the throttle valve body.

The electronic fuel injection extends the injection time when the engine is cold and the ambient temperature is low. To help the engine burn the increased amount of fuel, it must be supplied with additional oxygen by pushing the cold start button.

After briefly opening up the throttle and then releasing the throttle twist grip again, or turning the throttle twist grip towards the front, the cold start button returns to its original position.

Note

Check whether the cold start button has returned to its basic position.

Condition	Meaning
The cold start button is pushed in all the way to the stop.	Cold start button activated
The cold start button is in the basic position.	Cold start button deactivated

6.14 Idle speed adjustment screw

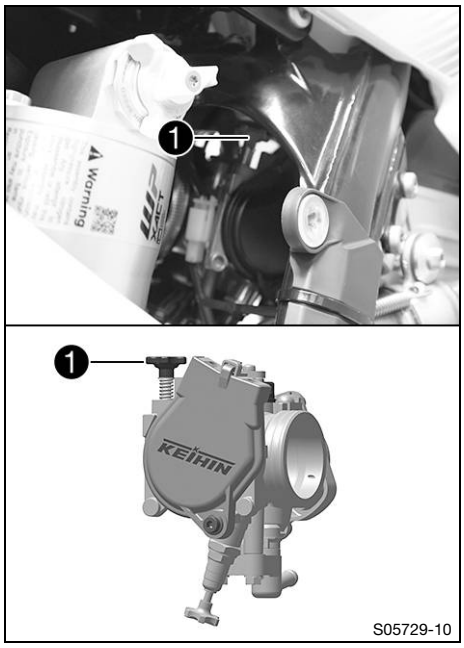

The idle setting of the throttle body substantially influences the vehicle's starting behavior, a stable idle speed, and the vehicle's response when the throttle is opened.

An engine with a correctly set idle speed is easier to start than an engine with the idle speed set incorrectly.

The idle speed is adjusted using idle speed adjusting screw ❶.

Increase the idle speed by turning the idle speed adjustment screw clockwise.

Decrease the idle speed by turning the idle speed adjustment screw counterclockwise.

6.15 Gear shift lever

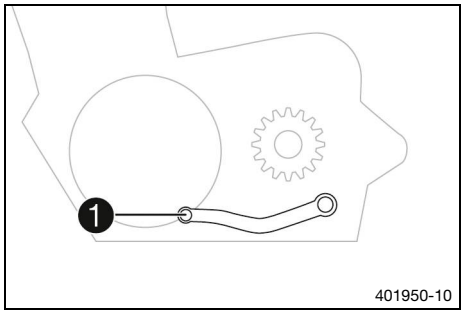

Gear shift lever ❶ is mounted on the left of the engine.

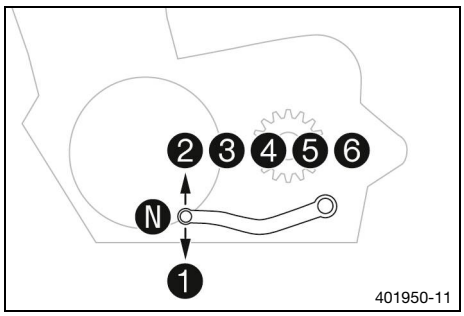

The gear positions can be seen in the figure.
The neutral or idle position is between the first and second gears.

6.16 Brake pedal

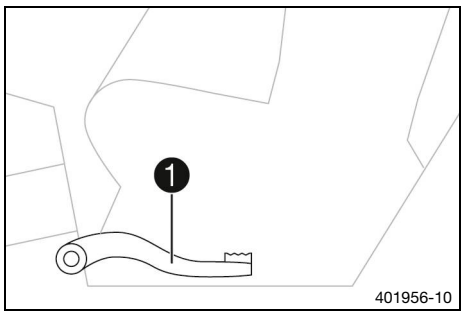

Brake pedal ❶ is located in front of the right footpeg.
The rear brake is operated with the brake pedal.

6.17 Side stand

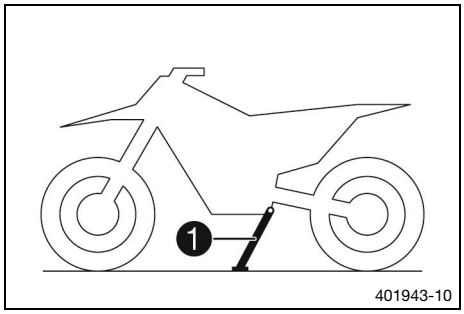

The side stand ❶ is attached to the left side of the vehicle.

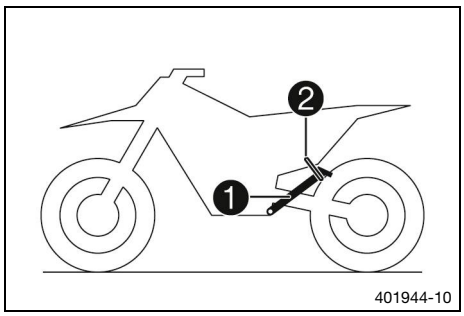

The side stand is used for parking the motorcycle.

Note
When you are riding, side stand ❶ must be folded up and secured with rubber band ❷.

6.18 Steering lock

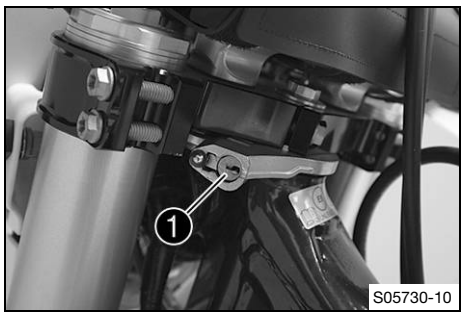

Steering lock ❶ is fitted on the left side of the steering head.
The steering lock is used to lock the steering. Steering and riding is then no longer possible.

6.19 Locking the steering

NOTE
Material damage The vehicle may be damaged if parked incorrectly.
Damage can occur if the vehicle rolls away or falls over.
The components for parking the vehicle are designed only for the weight of the vehicle.
– Park the vehicle on a firm and level surface.
– Make sure that nobody sits on the vehicle when it is parked on a stand.

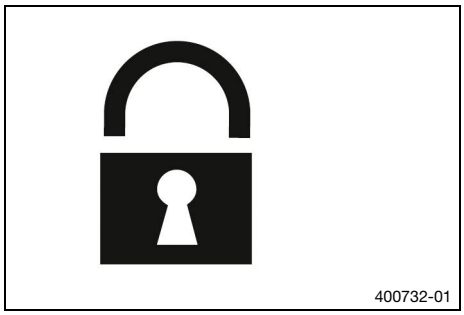

– Park the vehicle.
– Turn handlebar as far as possible to the right.
– Lubricate the steering lock regularly.

Universal oil spray (p. 177)

– Insert the key for the steering lock into the steering lock (p. 29), turn it to the left, push it in, and turn it to the right. Pull out the key for the steering lock.

Never leave the key for the steering lock in the steering lock.

6.20 Unlocking the steering

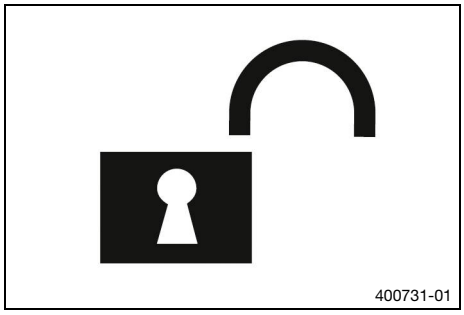

– Insert the key for the steering lock into thesteering lock (p. 29), turn it to the left, pull it out, pull it out, and turn it to the right. Pull out the key for the steering lock.

Never leave the key for the steering lock in the steering lock.

7.1 Combination instrument overview

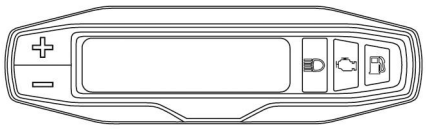

V00799-01

- Press the **button** + to control different functions.
- Press the **button** — to control different functions.

Note
When the vehicle is delivered, only the **SPEED/H** and **SPEED/ODO** display modes are activated.

7.2 activation and testing

7.2.1 Activating combination instrument

400313-01

The combination instrument is activated when one of the buttons is pressed or an impulse comes from the wheel speed sensor.

7.2.2 Display test

400313-01

To enable you to check that the display is functioning properly, all display segments light up briefly.

7.2.3 WS (wheel size)

400314-01

After the display function check, the wheel circumference **WS** is displayed briefly.

Note
The number 2205 equals the circumference of the 21" front wheel with standard tires.

The indicator then changes to the last selected mode.

7.3 Setting kilometers or miles

Note
If you change the unit, the value **ODO** is retained and converted accordingly.
The values **TR1**, **TR2**, **A1**, **A2** and **S1** are cleared when the unit of measure is changed.

Condition: Motorcycle is stationary

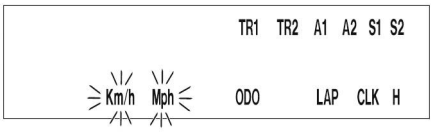

400329-01

– Briefly and repeatedly press button + until indicator **H** appears in the bottom right of the display.
– Press button + for 2–3 seconds.
  ✓ The Setup menu is displayed and the active functions are shown.
– Press button + briefly until indicator **Km/h** / **Mph** flashes.

– Select one of the following alternatives.

Adjusting the Km/h
  – Press button +.

Adjusting the Mph
  – Press button —.

– Wait 3 - 5 seconds.
  ✓ The settings are stored.

Note
If no button is pressed for 10–12 seconds, or if an impulse comes from the wheel speed sensor, the settings are automatically saved and the setup menu is closed.

7.4 Setting the combination instrument

Note
When the vehicle is delivered, only the **SPEED/H** and **SPEED/ODO** display modes are activated.

Condition: Motorcycle is stationary

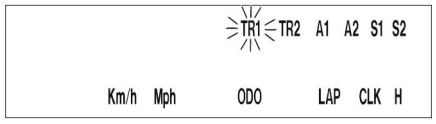

400318-01

– Briefly and repeatedly press button + until indicator **H** appears in the bottom right of the display.
– Press button + for 2–3 seconds.
  ✓ The Setup menu is displayed and the active functions are shown.

Note
If no button is pressed for 10–12 seconds, the settings are automatically saved.
If no button is pressed for 20 seconds, or if an impulse comes from the wheel speed sensor, the settings are automatically saved and the setup menu is closed.

– Press button + briefly until the desired function flashes.
  ✓ The selected function flashes.
– Select one of the following alternatives.

Activating the function
– Press button +.
  ✓ The symbol continues to appear in the display and the indicator switches to the next function.

Deactivating a function
– Press button —.
  ✓ The symbol disappears in the display and the indicator switches to the next function.

7.5 Setting the clock

Condition: Motorcycle is stationary

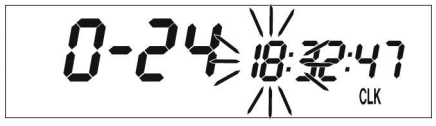

400330-01

– Briefly and repeatedly press button + until indicator **CLK** appears in the bottom right of the display.
– Press button + for 2–3 seconds.
  ✓ The hour display flashes.
– Adjust the hour display with the **button** + or **button** —.
– Wait 3 - 5 seconds.
  ✓ The next segment of the display flashes and can be set.
– You can set the following segments in the same way as the hours by pressing the **button** + and **button** —.

Note
The seconds can only be set to zero.
If no button is pressed for 15–20 seconds, or if a pulse comes from the wheel speed sensor, the settings are automatically saved and the setup menu is closed.

7.6 Viewing the lap time

Note
This function can only be opened if lap times have actually been timed.

Condition: Motorcycle is stationary

400321-01

- Briefly and repeatedly press button + until indicator **LAP** appears in the bottom right of the display.
- Press button + briefly.
  ✓ **LAP 1** appears on the left side of the display.
- The laps 1–10 can be viewed with the **button** —.
- Press the **button** + for 3–5 seconds.
  ✓ The lap times are deleted.
- Press button + briefly.
  ✓ Next display mode

Note
When an impulse is received from the wheel speed sensor, the left side of the display changes back to the **SPEED** mode.

7.7 Display mode SPEED (speed)

- Briefly and repeatedly press button + until indicator **SPEED** appears in the left of the display.

The current speed is displayed in the **SPEED** display mode.
The current speed can be displayed in **Km/h** or **Mph**.

Note
Make the setting according to the country.
When an impulse comes from the front wheel, the left side of the display changes to the **SPEED** mode and the current speed is shown.

7.8 Display mode SPEED/H (operating hours)

Condition: Motorcycle is stationary

- Briefly and repeatedly press button + until indicator **H** appears in the bottom right of the display.

In display mode **H**, the operating hours of the engine are displayed.
The operating hour counter stores the total traveling time.

Note
The operating hour counter is necessary for ensuring that service work is carried out at the right intervals.
If the combination instrument is in **H** display mode when starting off, it automatically changes to the **ODO** display mode.
The **H** display mode is suppressed during the journey.

– Press button + for 2–3 seconds.	The display changes to the functions setup menu.
– Press button + briefly.	Next display mode
– Press button — for 2–3 seconds.	No function
– Press button — briefly.	No function

7.9 Setup menu

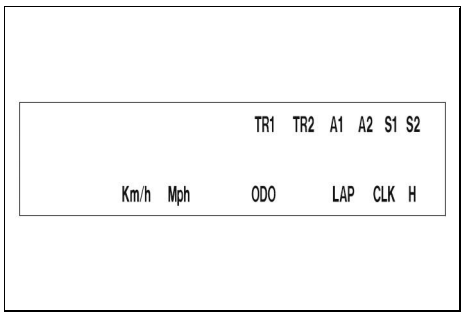

Condition: Motorcycle is stationary

– Briefly and repeatedly press button + until indicator **H** appears in the bottom right of the display.
– Press button + for 2–3 seconds.

The Setup menu displays the active functions.

Note

Repeatedly press the **button** + briefly until the desired function is reached.

If no button is pressed for 20 seconds, the settings are automatically saved.

– Press button + briefly.	Activates the flashing display and changes to the next display
– Press button + for 2–3 seconds.	No function
– Press button — briefly.	Deactivates the flashing display and changes to the next display
– Press button — for 2–3 seconds.	No function
– Wait 3 - 5 seconds.	Changes to the next display without changes
– Wait 10–12 seconds.	Setup menu starts, stores the settings, and changes to **H** or **ODO**.

7.10 Adjusting the unit of measurement

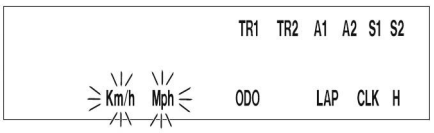

Condition: Motorcycle is stationary

– Briefly and repeatedly press button + until indicator **H** appears in the bottom right of the display.
– Press button + for 2–3 seconds.
– Press button + briefly until indicator **Km/h** / **Mph** flashes.

In measurement unit mode, you can change the unit of measurement.

Note
If no button is pressed for 5 seconds, the settings are automatically saved.

– Press button + briefly.	Starts selection, activates **Km/h** display
– Press button + for 2–3 seconds.	No function
– Press button — briefly.	Activates **Mph** display
– Press button — for 2–3 seconds.	No function
– Wait 3 - 5 seconds.	Changes to the next display, changes from selection to the Setup menu
– Wait 10–12 seconds.	Stores and closes the Setup menu

7.11 Display mode SPEED/CLK (time)

– Briefly and repeatedly press button + until indicator **CLK** appears in the bottom right of the display.

The time is shown in display mode **CLK**.

– Press button + for 2–3 seconds.	The display changes to the Setup menu of the clock.
– Press button + briefly.	Next display mode
– Press button — for 2–3 seconds.	No function

– Press button — briefly.	No function

7.12 Setting the clock

Condition: Motorcycle is stationary

– Briefly and repeatedly press button + until indicator **CLK** appears in the bottom right of the display.
– Press button + for 2–3 seconds.

– Press button + for 2–3 seconds.	Increases the value
– Press button + briefly.	Increases the value
– Press button — for 2–3 seconds.	Reduces the value
– Press button — briefly.	Reduces the value
– Wait 3 - 5 seconds.	Changes to the next value
– Wait 10–12 seconds.	Exit the Setup menu

7.13 Display mode SPEED/LAP (lap time)

– Briefly and repeatedly press button + until indicator **LAP** appears in the bottom right of the display.

In the **LAP** display mode, up to 10 lap times can be timed with the stop watch.

Note

If the lap time continues running after the **button** — is pressed, 9 memory locations are filled.

Lap 10 must be timed with the **button** +.

– Press button + for 2–3 seconds.	The stop watch and the lap time are reset.
– Press button + briefly.	Next display mode

– Press button — for 2–3 seconds.	Stops the clock.
– Press button — briefly.	Starts the stop watch or stop the current lap time measurement, stores it and the stop watch starts the next lap.

7.14 Viewing the lap time

Condition: Motorcycle is stationary

– Briefly and repeatedly press button + until indicator **LAP** appears in the bottom right of the display.
– Press button + briefly.

– Press button + for 2–3 seconds.	The stop watch and the lap time are reset.
– Press button + briefly.	Select a lap from 1–10
– Press button — for 2–3 seconds.	No function
– Press button — briefly.	View the next lap time.

7.15 Display mode SPEED/ODO (odometer)

– Briefly and repeatedly press button + until indicator **ODO** appears in the bottom right of the display.

The total traveled distance is shown in display mode **ODO**.

– Press button + for 2–3 seconds.	No function
– Press button + briefly.	Next display mode
– Press button — for 2–3 seconds.	No function
– Press button — briefly.	No function

7.16 Display mode SPEED/TR1 (trip master 1)

– Briefly and repeatedly press button + until indicator **TR1** appears in the top right of the display.

TR1 (trip master 1) runs constantly and counts up to 999.9.

You can use it to measure trips or the distance between refueling stops.

TR1 is coupled with **A1** (average speed 1) and **S1** (stop watch 1).

Note

If 999.9 is exceeded, the values of **TR1**, **A1** and **S1** are automatically reset to 0.0.

– Press button + for 2–3 seconds.	Displays of **TR1**, **A1** and **S1** are reset to 0.0.
– Press button + briefly.	Next display mode
– Press button — for 2–3 seconds.	No function
– Press button — briefly.	No function

7.17 Display mode SPEED/TR2 (trip master 2)

– Briefly and repeatedly press button + until indicator **TR2** appears in the top right of the display.

It **TR2** (trip master 2) runs constantly and counts up to 999.9.

– Press button + for 2–3 seconds.	Clears the values **TR2** and **A2**.
– Press button + briefly.	Next display mode
– Press button — for 2–3 seconds.	Reduces value of **TR2**.
– Press button — briefly.	Reduces value of **TR2**.

7.18 Adjusting TR2 (trip master 2)

Condition: Motorcycle is stationary

– Briefly and repeatedly press button + until indicator **TR2** appears in the top right of the display.
– Press the **button** — for 2–3 seconds until **TR2** flashes.

The displayed value can be set manually with the **button** + and **button** —. This is a very practical function when riding using the road book.

Note

The **TR2** value can also be corrected manually during the journey using the **button** + and the **button** —.

If 999.9 is exceeded, the value of **TR2** is automatically reset to 0.0.

– Press button + for 2–3 seconds.	Increases value of **TR2**.
– Press button + briefly.	Increases value of **TR2**.
– Press button — for 2–3 seconds.	Reduces value of **TR2**.
– Press button — briefly.	Reduces value of **TR2**.
– Wait 10–12 seconds.	Stores and closes the Setup menu.

7.19 Display mode SPEED/A1 (average speed 1)

– Briefly and repeatedly press button + until indicator **A1** appears in the top right of the display.

A1 (average speed 1) shows the average speed calculated using **TR1** (trip master 1) and **S1** (stop watch 1).

The calculation of this value is activated by the first impulse of the wheel speed sensor and ends 3 seconds after the last impulse.

– Press button + for 2–3 seconds.	Displays of **TR1**, **A1** and **S1** are reset to 0.0.
– Press button + briefly.	Next display mode

– Press button — for 2–3 seconds.	No function
– Press button — briefly.	No function

7.20 Display mode SPEED/A2 (average speed 2)

– Briefly and repeatedly press button + until indicator **A2** appears in the top right of the display.

A2 (average speed 2) shows the average speed on the basis of the current speed if the stop watch **S2** (stop watch 2) is running.

Note
The displayed value can differ from the actual average speed if **S2** was not stopped after the ride.

– Press button + briefly.	Next display mode
– Press button + for 2–3 seconds.	No function
– Press button — for 2–3 seconds.	No function
– Press button — briefly.	No function

7.21 Display mode SPEED/S1 (stop watch 1)

– Briefly and repeatedly press button + until indicator **S1** appears in the top right of the display.

S1 (Stop watch 1) shows the riding time based on **TR1** and continues running as soon as an impulse arrives from the wheel speed sensor.

The calculation of this value starts with the first impulse from the wheel speed sensor and ends 3 seconds after the last impulse.

– Press button + for 2–3 seconds.	Displays of **TR1**, **A1** and **S1** are reset to 0.0.
– Press button + briefly.	Next display mode

– Press button — for 2–3 seconds.	No function
– Press button — briefly.	No function

7.22 Display mode SPEED/S2 (stop watch 2)

– Briefly and repeatedly press button + until indicator **S2** appears in the top right of the display.

S2 (Stop watch 2) is a manual stop watch.

If **S2** is running in the background, indicator **S2** in the display flashes.

– Press button + for 2–3 seconds.	The displays of **S2** and **A2** are set to 0,0.
– Press button + briefly.	Next display mode
– Press button — for 2–3 seconds.	No function
– Press button — briefly.	Starts or stops **S2**.

7.23 Table of functions

Display	Press button + for 2–3 seconds.	Press button + briefly.	Press button — for 2–3 seconds.	Press button — briefly.	Wait 3 - 5 seconds.	Wait 10–12 seconds.
Display mode **SPEED/S2** (stop watch 2)	The displays of **S2** and **A2** are set to 0,0.	Next display mode	No function	Starts or stops **S2**.		
Display mode **SPEED/S1** (stop watch 1)	Displays of **TR1**, **A1** and **S1** are reset to 0.0.	Next display mode	No function	No function		
Display mode **SPEED/A2** (average speed 2)	No function	Next display mode	No function	No function		
Display mode **SPEED/A1** (average speed 1)	Displays of **TR1**, **A1** and **S1** are reset to 0.0.	Next display mode	No function	No function		

Display	Press button + for 2–3 seconds.	Press button + briefly.	Press button — for 2–3 seconds.	Press button — briefly.	Wait 3 - 5 seconds.	Wait 10–12 seconds.
Adjusting **TR2** (trip master 2)	Increases value of **TR2**.	Increases value of **TR2**.	Reduces value of **TR2**.	Reduces value of **TR2**.		Stores and closes the Setup menu.
Display mode **SPEED/TR2** (trip master 2)	Clears the values **TR2** and **A2**.	Next display mode	Reduces value of **TR2**.	Reduces value of **TR2**.		
Display mode **SPEED/TR1** (trip master 1)	Displays of **TR1**, **A1** and **S1** are reset to 0.0.	Next display mode	No function	No function		
Display mode **SPEED/ODO** (odometer)	No function	Next display mode	No function	No function		
Viewing the lap time	The stop watch and the lap time are reset.	Select a lap from 1–10	No function	View the next lap time.		
Display mode **SPEED/LAP** (lap time)	The stop watch and the lap time are reset.	Next display mode	Stops the clock.	Starts the stop watch or stop the current lap time measurement, stores it and the stop watch starts the next lap.		
Setting the clock	Increases the value	Increases the value	Reduces the value	Reduces the value	Changes to the next value	Exit the Setup menu
Display mode **SPEED/CLK** (time)	The display changes to the Setup menu of the clock.	Next display mode	No function	No function		
Adjusting the unit of measurement	No function	Starts selection, activates **Km/h** display	No function	Activates **Mph** display	Changes to the next display, changes from selection to the Setup menu	Stores and closes the Setup menu
Setup menu	No function	Activates the flashing display and changes to the next display	No function	Deactivates the flashing display and changes to the next display	Changes to the next display without changes	Setup menu starts, stores the settings, and changes to **H** or **ODO**.
Display mode **SPEED/H** (operating hours)	The display changes to the functions setup menu.	Next display mode	No function	No function		

7.24 Table of conditions and menu activation

Display	Motorcycle is stationary	Menu can be activated
Display mode **SPEED/S2** (stop watch 2)		•
Display mode **SPEED/S1** (stop watch 1)		•
Display mode **SPEED/A2** (average speed 2)		•
Display mode **SPEED/A1** (average speed 1)		•
Adjusting **TR2** (trip master 2)	•	
Display mode **SPEED/TR2** (trip master 2)		•
Display mode **SPEED/TR1** (trip master 1)		•
Display mode **SPEED/ODO** (odometer)		
Viewing the lap time	•	
Display mode **SPEED/LAP** (lap time)		•
Setting the clock	•	
Display mode **SPEED/CLK** (time)		
Adjusting the unit of measurement	•	
Setup menu	•	
Display mode **SPEED/H** (operating hours)	•	
Display mode **SPEED** (speed)		

8.1 Notes on preparing for first use

DANGER
Danger of accidents A rider who is not fit to ride poses a danger to themself and to others.
– Do not operate the vehicle if you are not fit to ride due to alcohol, drugs, or medication.
– Do not operate the vehicle if you are physically or mentally incapable of doing so.

WARNING
Danger of accidents The vehicle is not designed to carry passengers.
– Do not ride with a passenger.

WARNING
Danger of accidents The brake system fails in the event of overheating.
If the brake pedal is not released, the brake pads grind continuously.
– Take your foot off the brake pedal when you are not braking.

WARNING
Danger of accidents Not adapting the riding style constitutes a major risk.
– Adapt the vehicle speed to the road conditions and your riding ability.

WARNING
Danger of accidents Total weight and axle loads influence the handling characteristic.
– Do not exceed the maximum permissible total weight or the axle loads.

WARNING
Risk of injury People who act without authorization endanger themselves and others.
– Never leave the vehicle unattended while the engine is running.
– Secure the vehicle against unauthorized access.

WARNING
Danger of accidents Different tire profiles on the front and rear wheels can make it more difficult to control the vehicle.
– Make sure that only tires of the same tread type are mounted to the front and rear wheel.

WARNING
Risk of injury Missing or inadequate protective clothing increases the risk of injury.
– Wear appropriate protective clothing such as helmet, boots, gloves as well as pants and a jacket with protectors on all rides.
– Always wear protective clothing that is in good condition and meets the legal regulations.

Note
When using the motorcycle, remember that others may be disturbed by excessive noise.

– Ensure that the pre-delivery inspection has been carried out by an authorized contractual partner.
  ✓ The delivery certificate is transferred upon vehicle handover.
– Read the entire owner's manual before riding for the first time.
– Get to know the controls.
– Adjust the basic position of the clutch lever. (p. 101)
– Adjust the free travel of the handbrake lever. (p. 105)
– Adjust the basic position of the brake pedal. (p. 111)
– Adjust the basic position of the gear shift lever. (p. 144)

– Get used to the handling characteristics of the motorcycle on suitable terrain before undertaking a more challenging ride.

Note
When off-road, it is recommended that you be accompanied by another person with another vehicle so that you can help each other.

– Also, ride as slowly as possible and in a standing position to get a better feel for the motorcycle.
– Do not make any trips that exceed your ability and experience.
– Hold the handlebar firmly with both hands and keep your feet on the footpegs when riding.
– If luggage is carried, ensure it is fixed firmly as close as possible to the center of the vehicle and ensure even weight distribution between the front and rear wheels.

Note
Motorcycles react sensitively to any changes of weight distribution.

– The maximum permissible total weight and the maximum permissible axle loads must not be exceeded.

Maximum permissible total weight	335 kg (738.5 lb)
Maximum permissible front axle load	145 kg (319.7 lb)
Maximum permissible rear axle load	190 kg (418.9 lb)

– Check the spoke tension. (p. 123)

The spoke tension must be checked after half an hour of operation.

– Run in the engine. (p. 46)

8.2 Running in the engine

– Do not exceed the specified engine speed and load during the running-in time.

Maximum engine speed	
During the first operating hour	7,000 rpm (116.67 Hz)

Maximum engine power	
during the first 3 operating hours	≤ 75 %

Avoid fully opening the throttle.

8.3 Starting performance of lithium-ion batteries at low temperatures

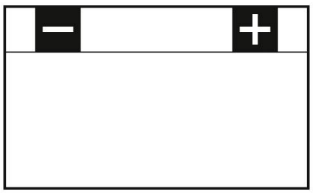

Lithium-ion batteries are far lighter than lead batteries, have a low self-discharge rate, and have more starting power at temperatures over 6 °C (43 °F).

Several attempts to start may be required. Press the start button for 5 seconds, and wait 15 seconds between attempts. At low temperatures, wait for 30 seconds. The pauses are necessary so that the heat created can be distributed through the lithium-ion battery without damaging the lithium-ion battery.

The starting power increases as the battery warms up.

Always make sure the lithium-ion battery is charged to that there is enough power to spare for starting at low temperatures.

After 6 unsuccessful starting attempts, do not try again, and check the vehicle for other faults instead.

8.4 Preparing the vehicle for difficult operating conditions

Note

Use of the vehicle under difficult conditions, such as on sand or on wet and muddy surfaces, can result in significantly increased wear of components, such as the drive train, brake system, or suspension components. For this reason, it may be necessary to inspect or replace parts before the next scheduled service interval.

– Clean the air filter and air filter box. (p. 85)

Check the air filter approx. every 30 minutes.

– Check the connector for humidity and corrosion and to ensure it is firmly seated.
  » If moisture, corrosion, or damage is found:
    – Clean and dry the socket connector, or change it if necessary.
– Riding on dry sand. (p. 47)
– Riding on wet sand. (p. 48)
– Rides on wet and muddy surfaces. (p. 48)
– Riding at high temperatures or slow speed. (p. 49)
– Riding at low temperatures and in snow. (p. 49)

8.5 Preparing the vehicle for rides on dry sand

102136-01

– Mount the air filter dust protection.

Read the accompanying mounting instructions.

Air filter dust protection cover (79006920000)

102138-01

– Mount the air filter sand protection.

Read the accompanying mounting instructions.

Air filter sand protection (79006922000)

600868-01

– Clean the chain.

Chain cleaner (p. 179)

– Mount the steel sprocket.
– Grease the chain.

Universal oil spray (p. 177)

– Clean the radiator fins.
– Straighten the bent radiator fins carefully.

8.6 Preparing the vehicle for rides on wet sand

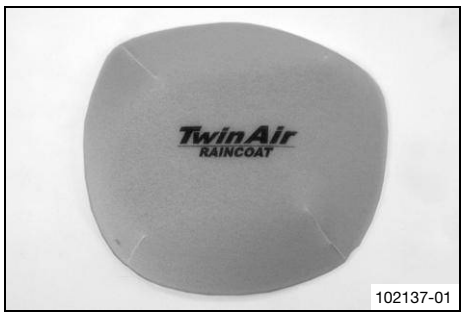

102137-01

– Mount the air filter water protection.

Read the accompanying mounting instructions.

Air filter water protection (79006921000)

600868-01

– Clean the chain.

Chain cleaner (p. 179)

– Mount the steel sprocket.
– Grease the chain.

Universal oil spray (p. 177)

– Clean the radiator fins.
– Straighten the bent radiator fins carefully.

8.7 Preparing for rides on wet and muddy surfaces

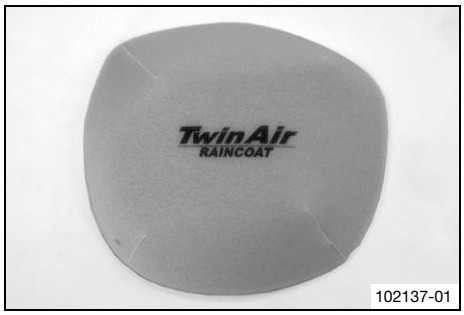

102137-01

– Mount the air filter water protection.

Read the accompanying mounting instructions.

Air filter water protection (79006921000)

– Mount the steel sprocket.
– Clean the motorcycle. (p. 152)
– Straighten the bent radiator fins carefully.

8.8 Preparing vehicle for rides at high temperature or slow speed

– Adjust the secondary transmission to the road conditions.

Note
The engine oil heats up quickly when the clutch is operated frequently due to an excessively high secondary ratio.

– Clean the chain. (p. 94)
– Clean the radiator fins.
– Straighten the bent radiator fins carefully.
– Check the coolant level. (p. 136)

8.9 Preparing the vehicle for low temperatures or snow

– Mount the air filter water protection.

Read the accompanying mounting instructions.

Air filter water protection (79006921000)

9.1 Checks and maintenance measures when preparing for use

Note
Before every trip, check the condition of the vehicle and ensure that it is safe to operate.
The vehicle must be in perfect technical condition when it is being operated.

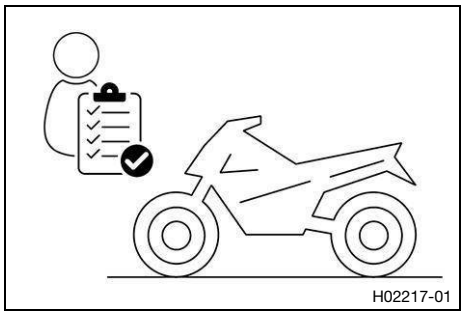

- Check the engine oil level. (p. 147)
- Check the electrical system.
- Check the brake fluid level for the front brake. (p. 106)
- Check the brake fluid level for the rear brake. (p. 112)
- Check that the brake pads of the front brake are secured. (p. 108)
- Check that the brake pads of the rear brake are secured. (p. 114)
- Check that the brake system is functioning properly.
- Check the coolant level. (p. 136)
- Check the chain for dirt. (p. 94)
- Check the chain, rear sprocket, engine sprocket, and chain guide. (p. 97)
- Check the chain tension. (p. 95)
- Check the tire condition. (p. 121)
- Check the tire pressure. (p. 122)
- Check the spoke tension. (p. 123)

  The spoke tension must be checked regularly as incorrect spoke tension will severely impair riding safety.
- Clean the dust boots of the fork legs. (p. 69)
- Bleed the fork legs. (p. 68)
- Check the air filter.
- Check the settings of all controls and ensure that they can be operated smoothly.
- Check all screws, nuts, and hose clamps regularly for tightness.
- Check the fuel level.

9.2 Starting the vehicle

DANGER
Danger of poisoning Exhaust gases are toxic and inhaling them may result in unconsciousness and death.
- Always ensure that there is sufficient ventilation when running the engine.
- Use suitable exhaust extraction when starting or running the engine in an enclosed space.

NOTE
Engine failure Running a cold engine at high engine speeds negatively impacts the service life of the engine.
- Always warm up the engine at low engine speeds.

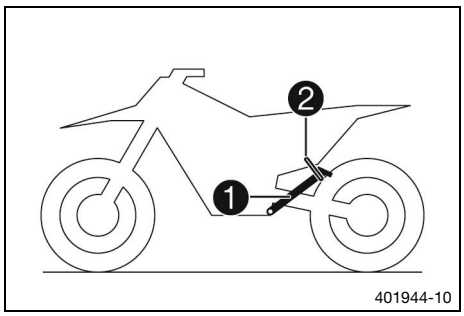

– Take the motorcycle off side stand ❶ and secure the side stand with rubber band ❷.
– Shift the transmission into the neutral position.
– Turn the ignition key in the ignition lock to position ◯.

Condition: Ambient temperature: < 20 °C (< 68.0 °F)

– Press the cold start button in all the way to the stop.

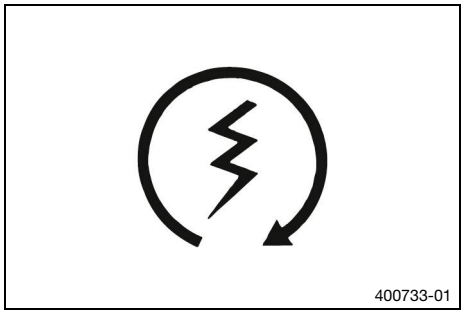

– Press **electric starter** ⚡.

Press the electric starter for a maximum of 5 seconds. Wait for 30 seconds before a further attempt at starting.

Note
At temperatures below 6 °C (43 °F), several attempts at starting may be necessary to warm-up the lithium-ion battery and thereby increase the starting power.
The malfunction indicator light lights up during the starting process.

9.3 Starting off

Note
When you are riding, the side stand must be folded up and secured with the rubber band.

– Pull the clutch lever, shift into first gear, release the clutch lever slowly and at the same time carefully open the throttle.

9.4 Shifting, riding.

WARNING
Danger of accidents If you downshift at high engine speed, the rear wheel blocks and the engine races.
– Do not downshift to a lower gear at high engine speeds.

Note
If you hear unusual noises while riding, stop immediately, switch off the engine, and contact an authorized contractual partner.
First gear is used for starting off or for steep inclines.

– Shift into a higher gear when conditions allow (incline, riding situation, etc.). To do so, release the throttle while simultaneously pulling the clutch lever, shift into the next gear, release the clutch lever and open the throttle.
– If you pushed the cold start button while starting, open the throttle briefly and release the throttle twist grip or turn the throttle twist grip forward.
  ✓ The cold start button goes to the basic position.

- After reaching maximum speed by fully opening the throttle twist grip, turn the throttle back so that it is ¾ open. This will reduce the speed slightly, but the fuel consumption will be considerably lower.
- Only open the throttle as much as the engine can handle. Abruptly opening the throttle increases fuel consumption.
- To shift down, apply the brakes and close the throttle at the same time.
- Pull the clutch lever and shift into a lower gear, release the clutch lever slowly, and either open the throttle or shift again.
- Switch off the engine if you are likely to be running at idle speed or stationary for a long time.

≥ 2 min

- Avoid frequent and lengthy slipping of the clutch. This causes the engine oil, engine and cooling system to heat up.
- Ride at a low engine speed instead of at a high engine speed when riding the clutch.

9.5 Braking

WARNING
Danger of accidents A spongy pressure point on the front or rear brake reduces the brake action.
- Do not drive the vehicle if the brake system has a spongy pressure point.

WARNING
Danger of accidents Braking with excessive force locks the wheels.
- Adapt your braking to the riding situation and the road conditions.

WARNING
Danger of accidents Moisture and dirt impair the brake system.
- Brake carefully several times to dry out and remove dirt from the brake pads and the brake discs.

- On sandy, wet, or slippery surfaces, use the rear brake.
- Always finish braking before you go into a bend. Shift into a lower gear that suits the speed.
- Use the brake action of the engine on long downhill stretches. Shift down one or two gears, but do not overrev the engine when doing so. This means that significantly less braking is required and means the brake system does not overheat.

9.6 Stop, park

WARNING
Danger of burns Some vehicle components become hot when the vehicle is operated.
- Do not touch any parts such as the exhaust system, radiator, engine, damper, or brake system before the vehicle parts have cooled down.
- Allow the vehicle parts to cool down before performing any work on the vehicle.

WARNING
Risk of injury People who act without authorization endanger themselves and others.
- Never leave the vehicle unattended while the engine is running.
- Secure the vehicle against unauthorized access.

NOTE
Fire hazard Hot vehicle components pose a fire hazard and explosion risk.
- Do not park the vehicle near materials which are highly flammable or explosive.
- Allow the vehicle to cool down before covering it.

NOTE
Material damage The vehicle may be damaged if parked incorrectly.
Damage can occur if the vehicle rolls away or falls over.
The components for parking the vehicle are designed only for the weight of the vehicle.
– Park the vehicle on a firm and level surface.
– Make sure that nobody sits on the vehicle when it is parked on a stand.

– Brake the motorcycle.
– Shift the transmission into the neutral position.
– Press kill switch when the engine is at idle speed until the engine stops.
– Turn the ignition key in the ignition lock to position with the engine at idle speed.
– Park the motorcycle on firm ground.

9.7 Transportation

NOTE
Fire hazard Hot vehicle components pose a fire hazard and explosion risk.
– Do not park the vehicle near materials which are highly flammable or explosive.
– Allow the vehicle to cool down before covering it.

NOTE
Material damage The vehicle may be damaged if parked incorrectly.
Damage can occur if the vehicle rolls away or falls over.
The components for parking the vehicle are designed only for the weight of the vehicle.
– Park the vehicle on a firm and level surface.
– Make sure that nobody sits on the vehicle when it is parked on a stand.

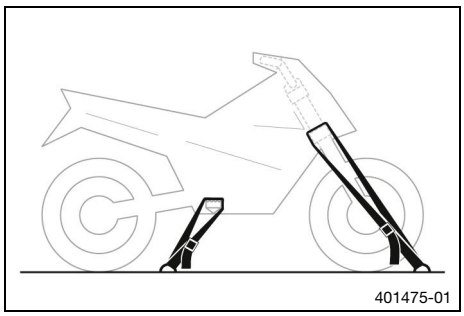

– Switch off the engine.
– Use tension belts or other suitable devices to secure the motorcycle against falling over or rolling away.

9.8 Refueling

DANGER
Fire hazard Fuel is highly flammable.
The fuel in the fuel tank expands when warm and can escape if overfilled.
– Do not refuel the vehicle in the vicinity of open flames, glowing, or smoldering objects.
– Make sure that nobody smokes in the vicinity of the vehicle during the refueling process.
– Switch off the engine for refueling.
– Make sure that no fuel is spilled; particularly not on hot parts of the vehicle.
– If any fuel is spilled, wipe it up immediately.
– Do not overfill the fuel tank.

WARNING

Danger of poisoning Fuel is harmful to health.

- Do not allow fuel to come into contact with skin, eyes, or clothing.
- Consult a doctor immediately if fuel has been ingested.
- Do not inhale fuel vapors.
- Rinse the affected area immediately with plenty of water in the event of contact with skin.
- Rinse eyes thoroughly with water and consult a doctor immediately if fuel comes into contact with eyes.
- If fuel spills on to your clothing, change the clothing.
- Store fuel properly in a suitable container and keep out of the reach of children.

NOTE

Material damage Inadequate fuel quality can lead to losses in performance and consequential damage.

- Refuel only with clean fuel that meets the specified standards.

NOTE

Environmental hazard Improper handling of fuel is dangerous to the environment.

- Do not allow fuel to enter the groundwater, the soil, or the sewage system.

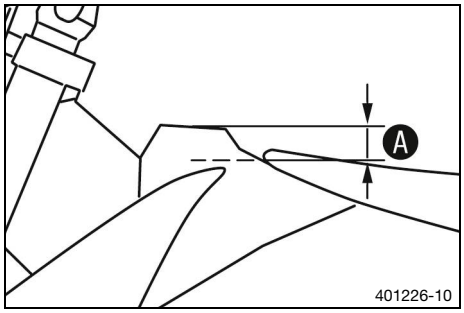

- Switch off the engine.
- Open the fuel tank cap. (p. 26)
- Fill the fuel tank with fuel no higher than A.

Level A	35 mm (1.38 in)

Total fuel tank capacity, approx.	
Super unleaded (ROZ 95) (p. 176)	8.0 l (2.11 liq. gal_{US})

- Close the fuel tank cap. (p. 26)

10.1 Service schedule

Any further work that results from the service work must be ordered separately and invoiced separately.

Different service intervals may apply in your country, depending on the local operating conditions.

Individual service intervals and scopes may change in the course of technical developments. The most up-to-date service schedule is available for authorized contractual partners for the electronic proof of service. Your authorized contractual partner will be happy to advise you.

** For California residents only: Inspection and adjustment is free until 5 years or 30,000 km (18,641 mi), whichever comes first.

					Every 24 months
				every 6,000 km (3,728.2 mi)	
			every 3,000 km (1,864.1 mi)		
		every 1,000 km (621.4 mi)			
	after 70 km (43.5 mi)				
Read out the fault memory using the diagnostics tool.	○	●	●	●	●
Program the gear position sensor.		●	●	●	
Check that the electrical equipment is functioning properly.	○	●	●	●	
Check and charge the 12 V battery.		●	●	●	●
Check that the brake pads of the front brake are secured. (p. 108)		●	●	●	●
Check that the brake pads of the rear brake are secured. (p. 114)		●	●	●	●
Check the brake discs. (p. 105)		●	●	●	●
Check the brake lines for damage and tightness.		●	●	●	●
Check the brake fluid level for the front brake. (p. 106)		●	●		
Change the brake fluid for the front brake.				●	●
Check the brake fluid level for the rear brake. (p. 112)		●	●		
Change the brake fluid for the rear brake.				●	●
Check/correct the fluid level of the hydraulic clutch. (p. 101)			●		
Change the hydraulic clutch fluid. (p. 102)				●	●
Check the free travel on the hand brake lever. (p. 105)	○	●	●	●	●
Check the free travel of the brake pedal. (p. 111)		●	●	●	●
Check idle speed. **	○	●	●	●	●
Change the engine oil and the oil filter, clean the oil screens. (p. 148)	○	●	●	●	●
Check all hoses (e.g. fuel, cooling, bleeder, drainage, etc.) and boots for cracking, leaks, and correct routing.	○	●	●	●	●
Check the cables for damage and that there are no kinks in the routing.		●	●	●	●
Check that the clutch cables are undamaged, routed without kinks, and set correctly.		●	●	●	
Check the frame. (p. 99)		●	●	●	
Check the swingarm. (p. 99)		●	●	●	
Check the swingarm bearing for play.			●	●	
Check the heim joint on the shock absorber for play.			●	●	
Check the shock absorber linkage.		●	●	●	
Check the tire condition. (p. 121)		●	●	●	●
Check the tire pressure. (p. 122)		●	●	●	●

					Every 24 months
				every 6,000 km (3,728.2 mi)	
			every 3,000 km (1,864.1 mi)		
		every 1,000 km (621.4 mi)			
	after 70 km (43.5 mi)				
Check the wheel bearing for play.		●	●	●	
Check the hubs.		●	●	●	
Check the rim run-out.	○	●	●	●	
Check the spoke tension. (p. 123)	○	●	●	●	
Check the chain, rear sprocket, engine sprocket, and chain guide. (p. 97)	○	●	●	●	
Check the chain tension. (p. 95)	○	●	●	●	●
Grease all moving parts (e.g. side stand, hand lever, chain, etc.) and check for smooth operation.	○	●	●	●	●
Check valve clearance. **	○		●	●	
Change the fuel filter.				●	●
Check the clutch.			●	●	
Clean the air filter and air filter box. (p. 85)		●	●	●	●
Check the inlet membrane.			●	●	
Change the damping material on the main silencer. (p. 90)			●	●	
Carry out fork service.			●	●	
Service the shock absorber.			●	●	
Check all screws, nuts, and hose clamps for a tight fit.	○	●	●	●	●
Change the fuel screen. (p. 146)	○	●	●	●	●
Check the fuel pressure.	○		●	●	●
Check the frost protection and coolant level. (p. 135)			●	●	
Check the coolant level. (p. 136)	○	●			
Change the coolant. (p. 138)					●
Check that the radiator fan is functioning properly.	○	●	●	●	
Check the steering head bearing play. (p. 76)	○	●			
Lubricate the steering head bearing. (p. 78)			●	●	●
Check the headlight adjustment. (p. 131)		●	●	●	
Clean spark arrestor. (p. 88)				●	●
Perform engine service including removing and installing the engine. (Change the spark plug and spark plug connector. Change the piston. Check/measure the cylinder. Check the cylinder head. Change the valves, valve springs, valve spring retainers and valve spring seats. Check the camshaft, rocker arm and rocker arm shafts. Change the connecting rod, conrod bearing and crank pin. Check the transmission and shift mechanism. Check the oil pressure control valve. Change the suction pump. Check the force pump and lubrication system. Check the timing assembly. Change the timing chain. Change all engine bearings and all gaskets. Change the freewheel.)				●	
Final check: Check the vehicle is roadworthy and take a test ride.	○	●	●	●	●
Read out the fault memory after the test ride using the diagnostics tool.	○	●	●	●	●
Enter the electronic proof of service in the contractual partner portal.	○	●	●	●	●

- ○ One-time interval
- ● Periodic interval

11.1 Checking the basic chassis setting with the rider's weight

Note
When adjusting the basic chassis setting, first adjust the shock absorber and then the fork.

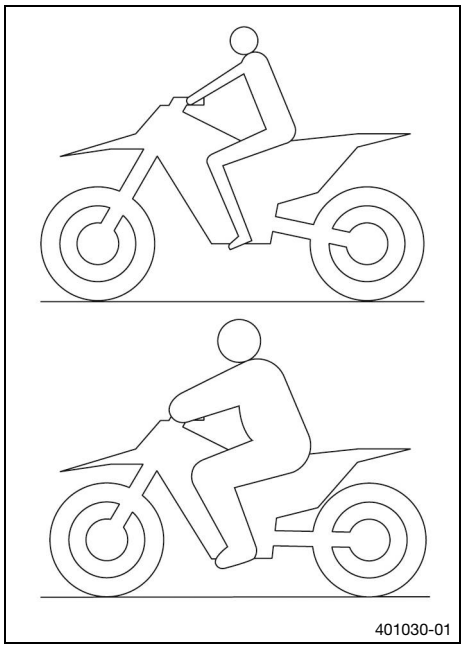

- For optimal motorcycle riding characteristics and to avoid damage to forks, shock absorbers, swingarm, and frame, the basic settings of the suspension components must match the rider's weight.
- On delivery, Husqvarna Mobility offroad motorcycles are adjusted for an average rider's weight (with full protective clothing).

Standard rider weight	75 kg … 85 kg (165.3 lb … 187.4 lb)

- If the rider's weight is above or below this range, the basic setting of the suspension components must be adjusted accordingly.
- Small weight differences can be compensated for by adjusting the preload, but in the case of large weight differences, the springs must be replaced.

11.2 Compression damping of the shock absorber

The compression damping of the shock absorber is divided into two ranges: high-speed and low-speed.

High-speed and low-speed refer to the compression speed of the rear wheel suspension and not to the vehicle speed.

The high-speed compression has an effect, for example, when landing after a jump: the rear wheel suspension compresses quickly.

The low-speed compression has an effect, for example, when riding over long bumps: the rear wheel suspension compresses slowly.

These two ranges can be adjusted separately, although the transition between high-speed and low-speed is floating. As a result, changes in the high-speed range affect the compression damping in the low-speed range and vice versa.

11.3 Adjusting the low-speed compression damping of the shock absorber

CAUTION
Risk of injury Parts of the shock absorber will move erratically if the shock absorber is detached incorrectly.

The shock absorber is filled with highly compressed nitrogen.

- Please follow the description provided.

Note
The effect of the low-speed compression adjustment can be seen in slow to normal compression of the shock absorber.

Preparatory work

– Remove the seat. (p. 83)
– Remove the right side fairing. (p. 86)

Main work

– Turn adjusters ❶ clockwise up to the last perceptible click.
– Turn counterclockwise by the number of clicks corresponding to the shock absorber type.

Low-speed compression damping	
Comfort	18 clicks
Standard	15 clicks
Sport	12 clicks

Note
Turning clockwise increases damping; turning anti-clockwise reduces damping.

Reworking

– Install the right side cover. (p. 87)
– Mount the seat. (p. 83)

11.4 Adjusting the high-speed compression damping of the shock absorber

CAUTION
Risk of injury Parts of the shock absorber will move erratically if the shock absorber is detached incorrectly.
The shock absorber is filled with highly compressed nitrogen.
– Please follow the description provided.

Note
The effect of the high-speed compression adjustment can be seen in the fast compression of the shock absorber.

Preparatory work

– Remove the seat. (p. 83)
– Remove the right side fairing. (p. 86)

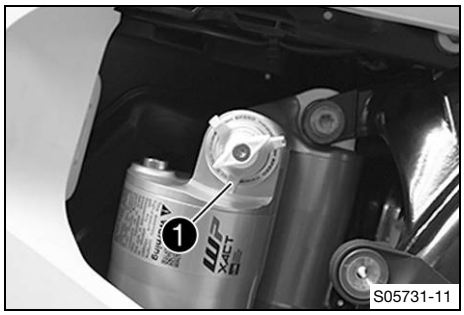

Main work

– Turn adjusters ❶ clockwise all the way to the stop.
– Turn counterclockwise by the number of turns corresponding to the shock absorber type.

High-speed compression damping	
Comfort	2.5 turns (900°)
Standard	2 turns (720°)
Sport	1.5 turns (540°)

Note
Turning clockwise increases damping; turning counterclockwise reduces damping during compression.

Reworking

– Install the right side cover. (p. 87)
– Mount the seat. (p. 83)

11.5 Adjusting the rebound damping of the shock absorber

CAUTION
Risk of injury Parts of the shock absorber will move erratically if the shock absorber is detached incorrectly.
The shock absorber is filled with highly compressed nitrogen.
– Please follow the description provided.

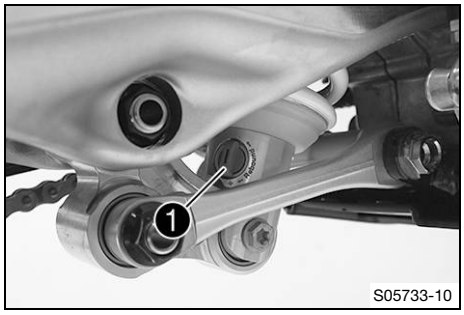

– Turn adjusters ❶ clockwise up to the last perceptible click.
– Turn counterclockwise by the number of clicks corresponding to the shock absorber type.

Rebound damping	
Comfort	18 clicks
Standard	15 clicks
Sport	12 clicks

Note
Turning clockwise increases damping; turning anticlockwise reduces damping on rebound.

11.6 Measuring the dimension of the unloaded rear wheel

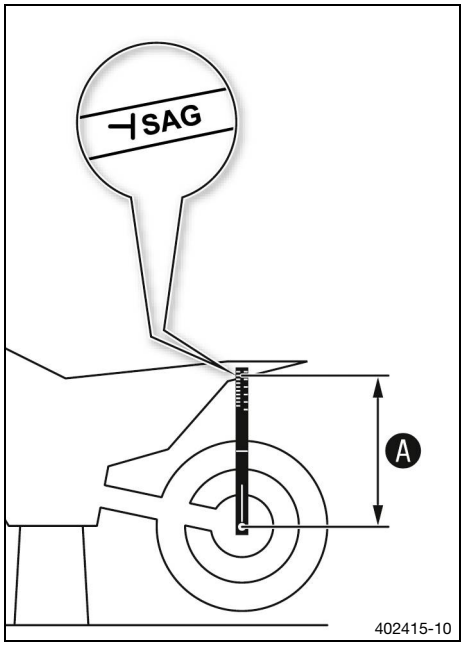

Preparatory work

– Raise the motorcycle with a lift stand. (p. 68)

Main work

– Position the sag gage in the rear axle and measure the distance to marking **SAG** on the rear fender.

Sag scale (00029090200)

– Note the value as dimension **A**.

Reworking

– Remove the motorcycle from the lift stand. (p. 68)

11.7 Checking the static sag of the shock absorber

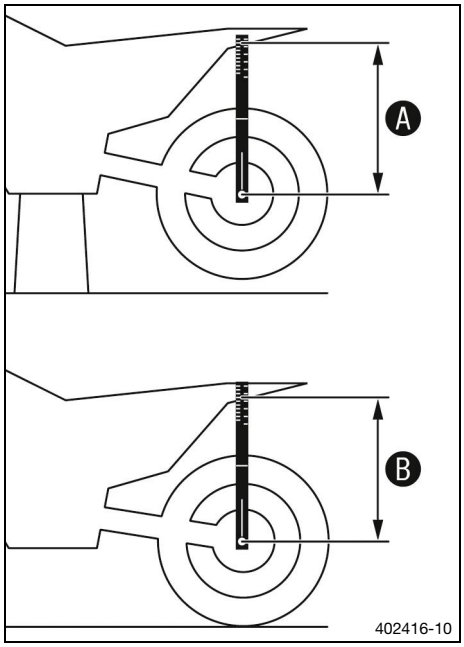

– Determine rear wheel dimension A. (p. 61)
– Hold the motorcycle upright with aid of an assistant.
– Measure the distance again between the rear axle and marking SAG on the rear fender using the sag scale.
– Note the value as dimension B.

Note
The static sag is the difference between measurements A and B.

– Check the static sag.

Static sag	40 mm (1.57 in)

» If the static sag is more or less than the specified value:
  – Adjust the preload for the shock absorber. (p. 63)

11.8 Checking the rider sag of the shock absorber

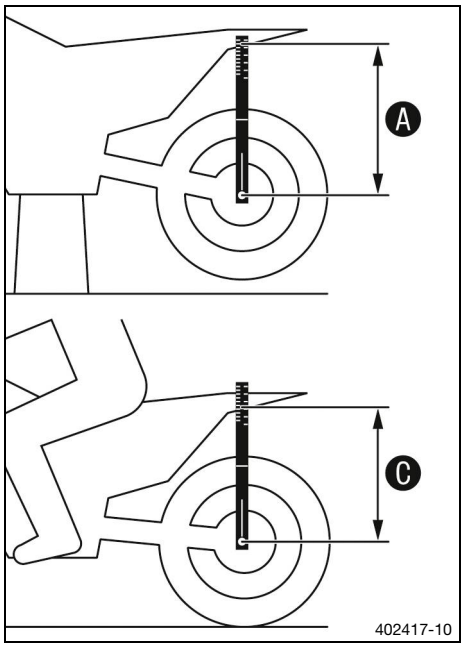

– Determine rear wheel dimension A. (p. 61)
– With another person holding the motorcycle, sit on the saddle with full protective clothing in a normal sitting position (feet on footrests) and bounce up and down a few times.
  ✓ The rear wheel suspension levels out.
– With the help of another person, remeasure the distance between the rear axle and marking SAG on the rear fender using the sag scale.
– Note the value as dimension C.

Note
The rider sag is the difference between measurements A and C.

– Check the rider sag.

Rider sag	110 mm (4.33 in)

» If the rider sag differs from the specified measurement:
  – Adjust the rider sag. (p. 64)

11.9 Adjusting the preload for the shock absorber

CAUTION

Risk of injury Parts of the shock absorber will move erratically if the shock absorber is detached incorrectly.

The shock absorber is filled with highly compressed nitrogen.

– Please follow the description provided.

Note

Note the current adjustment before changing the spring preload - e.g. measure the spring length.

Preparatory work

– Raise the motorcycle with a lift stand. (p. 68)
– Remove air filter box cover. (p. 84)
– Remove the seat. (p. 83)
– Remove the right side fairing. (p. 86)
– Remove the frame protector. (p. 70)
– Remove the shock absorber. (p. 79)
– After removing the shock absorber, clean it thoroughly.

Main work

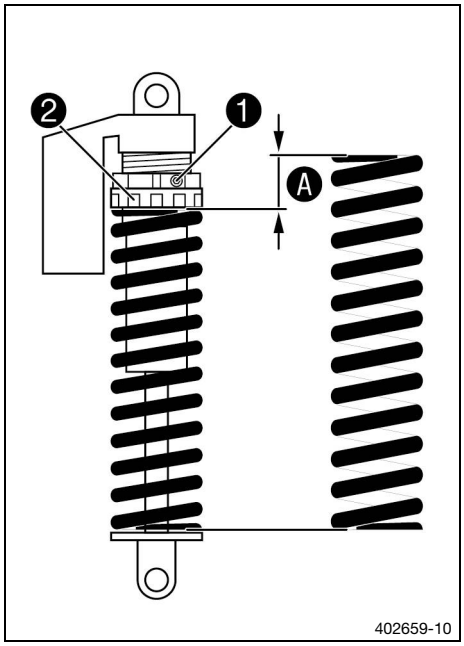

– Loosen screw 1.
– Turn adjusting ring 2 until the spring is no longer under tension.

If the spring cannot be fully released, the spring must be removed to accurately measure the spring length.

Hook wrench (90129051000)

– Measure the total spring length while the spring is not under tension.
– Tension the spring by turning adjusting ring 2 to the specified degree A.

Preload	7 mm (0.28 in)

Note

Depending on the static sag and/or the rider sag, it may be necessary to increase or decrease the spring preload.

– Tighten screw 1.

Screw, shock absorber adjusting ring	
M5	5 Nm (3.7 ft·lb_f)

Make sure that the adjusting ring does not touch any other components when installed.

Reworking

- Install the shock absorber. (p. 81)
- Install the frame protector. (p. 71)
- Install the right side cover. (p. 87)
- Mount the seat. (p. 83)
- Install the air filter box cover. (p. 84)
- Remove the motorcycle from the lift stand. (p. 68)
- Check the static sag of the shock absorber. (p. 62)
- Check the rider sag of the shock absorber. (p. 62)
- Adjust the rebound damping of the fork. (p. 66)

11.10 Adjusting the rider sag

Preparatory work

- Raise the motorcycle with a lift stand. (p. 68)
- Remove air filter box cover. (p. 84)
- Remove the seat. (p. 83)
- Remove the right side fairing. (p. 86)
- Remove the frame protector. (p. 70)
- Remove the shock absorber. (p. 79)
- After removing the shock absorber, clean it thoroughly.

Main work

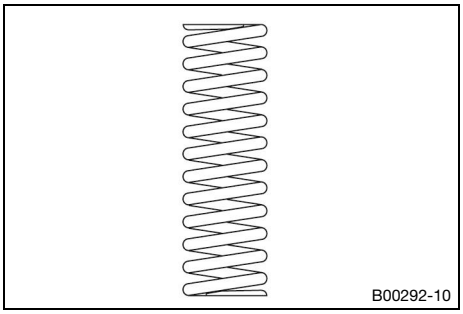

- Select and mount a suitable spring.

Weight of rider: 65 kg … 75 kg (143.3 lb … 165.3 lb)	42 N/mm (239.8 lb_f/in)
Weight of rider: 75 kg … 85 kg (165.3 lb … 187.4 lb)	45 N/mm (257.0 lb_f/in)
Weight of rider: 85 kg … 95 kg (187.4 lb … 209.4 lb)	48 N/mm (274.1 lb_f/in)

Note

The spring rate is shown on the outside of the spring. Smaller weight differences can be compensated by changing the spring preload.

Reworking

- Install the shock absorber. (p. 81)
- Install the frame protector. (p. 71)
- Install the right side cover. (p. 87)
- Mount the seat. (p. 83)
- Install the air filter box cover. (p. 84)
- Remove the motorcycle from the lift stand. (p. 68)
- Check the static sag of the shock absorber. (p. 62)

– Check the rider sag of the shock absorber. (p. 62)
– Adjust the rebound damping of the shock absorber. (p. 60)

11.11 Checking the basic setting of the fork

Note
For various reasons, no exact rider sag can be determined for the fork.

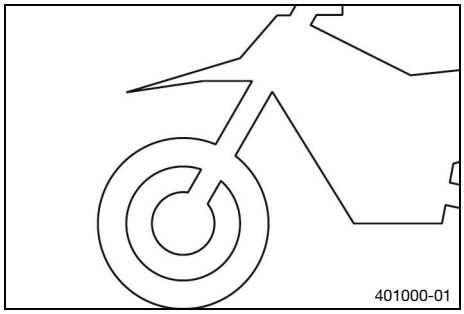

– As with the shock absorber, smaller differences in the rider's weight can be compensated by the spring preload.
– However, if the fork frequently bottoms out (hard end stop on compression), harder springs must be fitted to avoid damage to the fork and frame.
– If the fork feels unusually hard after extended periods of operation, the fork legs need to be bled.

11.12 Adjusting the compression damping of the fork

Note
The hydraulic compression damping determines the fork suspension behavior.

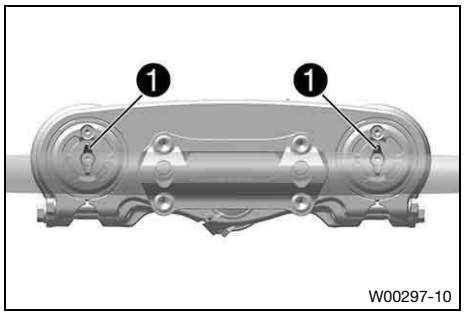

– Turn white adjuster ❶ clockwise as far as it will go.

Note
Adjusters ❶ **COMP** are located at the top end of the fork legs.

– Turn counterclockwise by the number of clicks corresponding to the fork type.

Compression damping	
Comfort	17 clicks
Standard	15 clicks
Sport	7 clicks

Note
Turning clockwise increases damping; turning counterclockwise reduces damping during compression.

11.13 Adjusting the rebound damping of the fork

Note
The hydraulic rebound damping determines the fork suspension behavior.

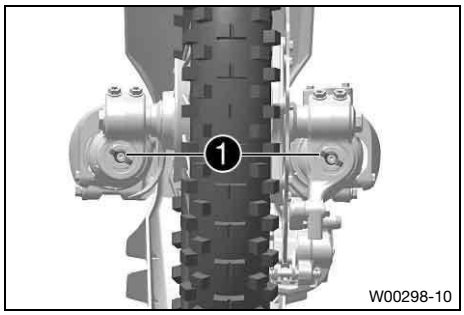

– Turn red adjuster ❶ clockwise as far as it will go.

Note
Adjusters ❶ **REB** are located at the bottom end of the fork legs.

– Turn counterclockwise by the number of clicks corresponding to the fork type.

Rebound damping	
Comfort	19 clicks
Standard	17 clicks
Sport	9 clicks

Note
Turning clockwise increases damping; turning anti-clockwise reduces damping on rebound.

11.14 Handlebar position

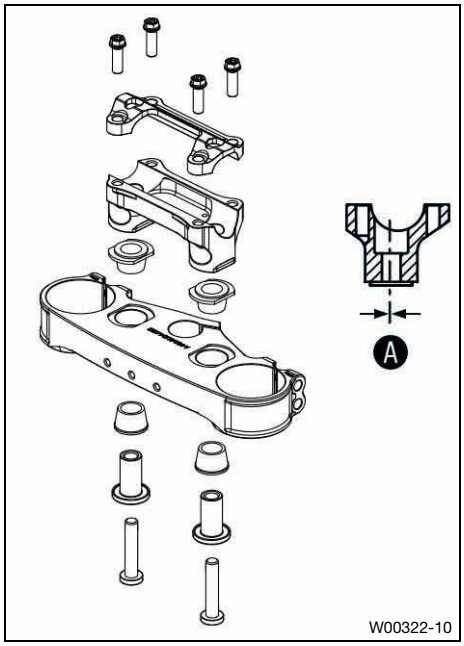

The holes on the handlebar support are placed at a distance of Ⓐ from the center.

Hole distance Ⓐ	3.5 mm (0.138 in)

The handlebar support can be mounted in two different positions.

11.15 Adjusting the handlebar position

WARNING

Danger of accidents A repaired handlebar poses a safety risk.

If the handlebar is bent or straightened, the material becomes fatigued. The handlebar may break as a result.

– Change the handlebar if the handlebar is damaged or bent.

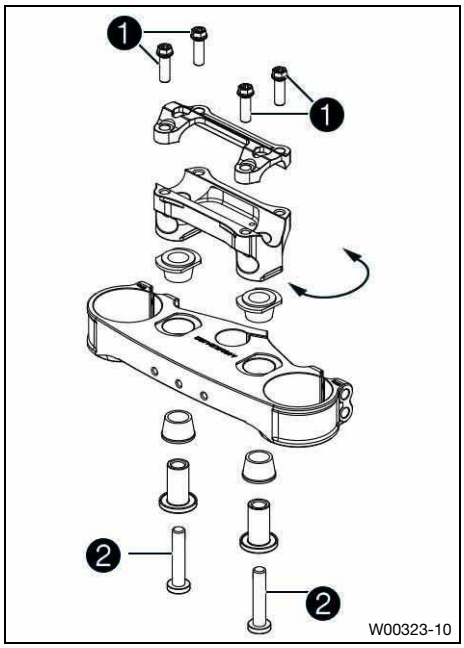

– Remove ❶ screws. Take off the handlebar clamp. Remove the handlebar and lay it to one side.

Protect the components against damage by covering them.
Do not kink the cables or lines.

– Remove ❷ screws. Take off the handlebar support.
– Place the handlebar mount in the required position. Mount and tighten screws ❷.

Screw, handlebar mount	
M10	40 Nm (29.5 ft·lb$_f$) **Loctite® 243**

Position the handlebar support so that it is even.

– Position the handlebar.

Make sure the cables and wiring are positioned correctly.

– Position the handlebar clamp. Mount screws ❶ and tighten evenly.

Handlebar clamp screw	
M8	20 Nm (14.8 ft·lb$_f$)

Make sure the installed gap widths are even.

12.1 Raising the motorcycle with a lift stand

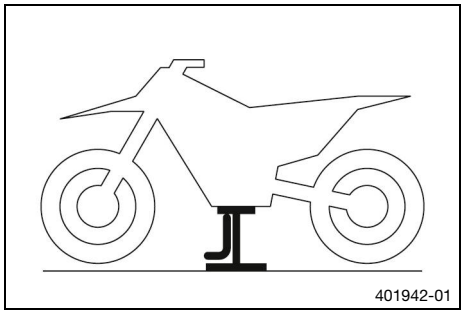

NOTE

Material damage The vehicle may be damaged if parked incorrectly.

Damage can occur if the vehicle rolls away or falls over.

The components for parking the vehicle are designed only for the weight of the vehicle.

– Park the vehicle on a firm and level surface.
– Make sure that nobody sits on the vehicle when it is parked on a stand.

– Raise the motorcycle at the frame underneath the engine.

Lift stand (78129955100)

✓ Neither wheel is in contact with the ground.

– Secure the motorcycle against falling over.

12.2 Removing the motorcycle from the lift stand

NOTE

Material damage The vehicle may be damaged if parked incorrectly.

Damage can occur if the vehicle rolls away or falls over.

The components for parking the vehicle are designed only for the weight of the vehicle.

– Park the vehicle on a firm and level surface.
– Make sure that nobody sits on the vehicle when it is parked on a stand.

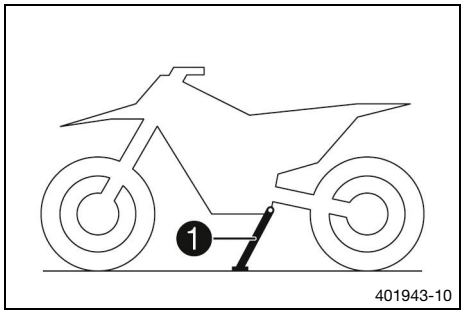

– Remove the motorcycle from the lift stand.
– Remove the lift stand.
– To park the motorcycle, press side stand ❶ to the ground with your foot and lean the motorcycle on it.

When you are riding, the side stand must be folded up and secured with the rubber band.

12.3 Bleeding the fork legs

Preparatory work

– Raise the motorcycle with a lift stand. (p. 68)

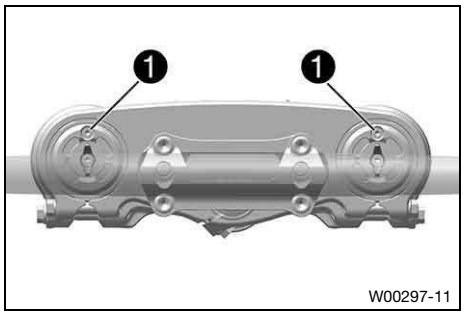

Main work

– Loosen bleeder screw ❶.
  ✓ Any excess pressure escapes from the inner fork.
– Tighten the bleeder screw.

Reworking

– Remove the motorcycle from the lift stand. (p. 68)

12.4 Cleaning the dust boots of the fork legs

Preparatory work

– Raise the motorcycle with a lift stand. (p. 68)
– Remove the fork protector. (p. 70)

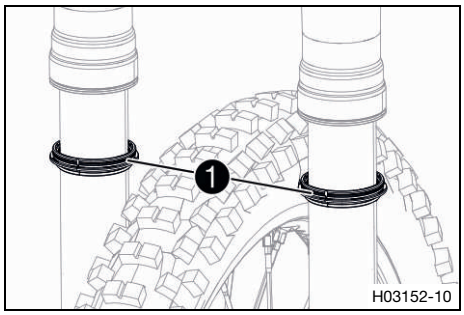

Main work

– Push dust boot ❶ downward on both fork legs.

Note
The dust boots should remove dust and coarse dirt particles from the inner fork tubes. Over time, dirt can accumulate behind the dust boots. If this dirt is not removed, the oil seals behind can start to leak.

WARNING
Danger of accidents Oil, grease or wax on the brake discs reduces the brake action.
– Always keep the brake discs free of oil, fat and wax.
– Clean the brake discs with brake cleaner when necessary.

– Clean and oil the dust boots and the inner fork tube of both fork legs.

Universal oil spray (p. 177)

– Press the dust boots back into their installation position.
– Remove excess oil.

Reworking

– Install the fork protector. (p. 70)
– Remove the motorcycle from the lift stand. (p. 68)

12.5 Removing the fork protector

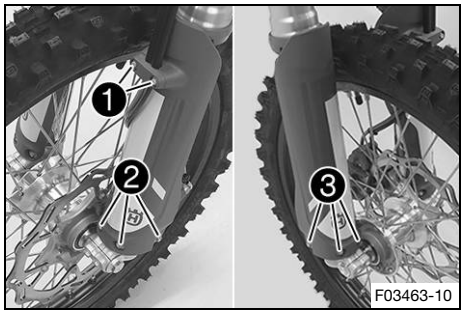

- Remove screw ❶ and take off the clamp.
- Remove screws ❷ on the left fork leg and take off the left fork protector.
- Remove screws ❸ on the right fork leg and take off the right fork protector.

12.6 Installing the fork protector

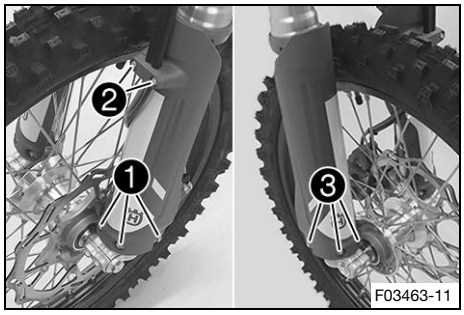

- Position the fork protector on the left fork leg. Mount and tighten screws ❶.

Remaining screws on chassis	
M6	10 Nm (7.4 ft·lb$_f$)

- Position the brake line, the wiring harness, and the clamp. Mount and tighten screws ❷.

Remaining screws on chassis	
EJOT PT® – K60×25 – Z	2 Nm (1.5 ft·lb$_f$)

- Position the fork protector on the right fork leg. Mount and tighten screws ❸.

Remaining screws on chassis	
M6	10 Nm (7.4 ft·lb$_f$)

12.7 Removing the frame protector

Preparatory work

- Remove air filter box cover. (p. 84)
- Remove the seat. (p. 83)
- Remove the right side fairing. (p. 86)

Main work

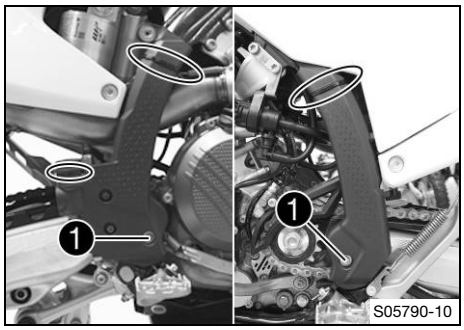

- Remove the cable ties.
- Remove screws ❶ with the bushings.
- Take off the left frame protector.
- Push the right frame protector to the front and take off at the bottom.

12.8 Installing the frame protector

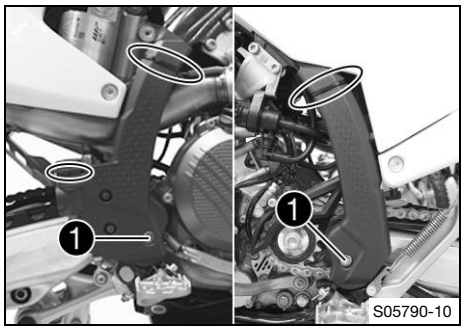

Main work

- Position the left frame protector.
- Insert the right frame protector from below and push it to the rear.
- Mount screws ❶ with the bushings and tighten.

Screw, frame protector	
M5	3 Nm (2.2 ft·lb$_f$)

- Secure the frame protector with cable ties.

Turn the head of the cable tie so far back that it does not touch any other components.

Reworking

- Install the right side cover. (p. 87)
- Mount the seat. (p. 83)
- Install the air filter box cover. (p. 84)

12.9 Removing the fork legs

Preparatory work

- Raise the motorcycle with a lift stand. (p. 68)
- Remove the front wheel. (p. 118)

Main work

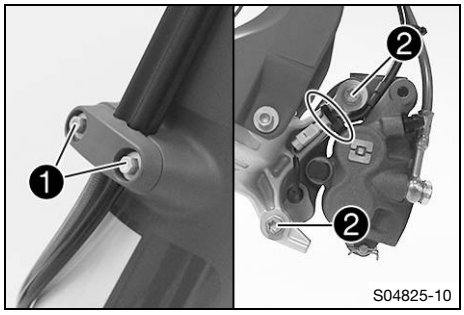

- Remove screws ❶ and take off the clamp.
- Remove the cable ties.
- Remove screws ❷ and take off the brake caliper.
- Allow the brake caliper and the brake line to hang loosely to the side.

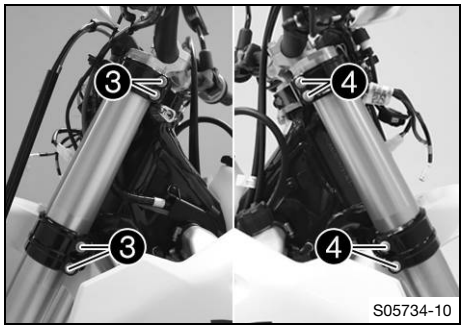

- Loosen screws ❸.
- Remove the left fork leg.
- Loosen screws ❹.
- Remove the right fork leg.

12.10 Installing the fork legs

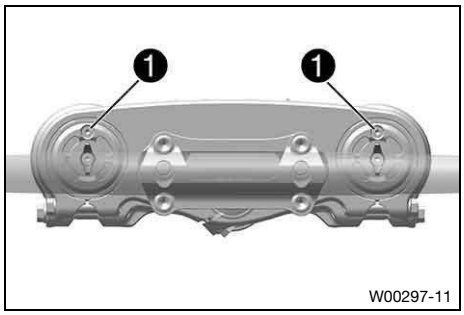

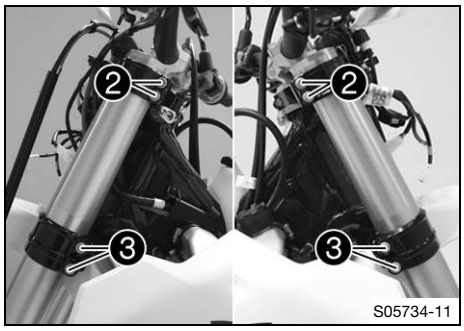

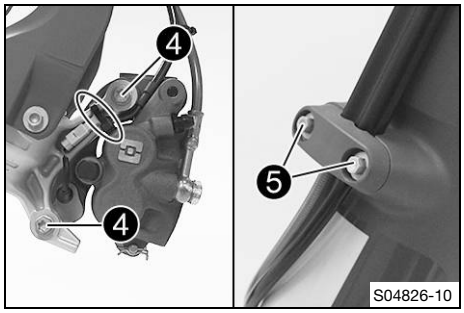

Main work

– Position the fork legs.

✓ Bleeder screws ❶ are positioned toward the front.

> **Note**
> Grooves are milled into the side of the upper end of the fork legs. The second milled groove (from the top) must be flush with the upper edge of the upper triple clamp.
> The pressure and rebound damping is located in the left and right fork leg.

– Tighten screws ❷.

Milled upper triple clamp screw	
M8	17 Nm (12.5 ft·lb$_f$)

– Tighten screws ❸.

Milled lower triple clamp screw	
M8	12 Nm (8.9 ft·lb$_f$)

– Position the brake caliper, and mount and tighten screws ❹.

Screw, front brake caliper	
M8	25 Nm (18.4 ft·lb$_f$) **Loctite® 243**

– Mount cable ties.

– Position the brake line, the wiring harness, and the clamp. Mount and tighten screws ❺.

Remaining screws on chassis	
EJOT PT® – K60×25 – Z	2 Nm (1.5 ft·lb$_f$)

Reworking

– Install the front wheel. (p. 119)

– Remove the motorcycle from the lift stand. (p. 68)

12.11 Removing the lower triple clamp

Preparatory work

- Raise the motorcycle with a lift stand. (p. 68)
- Remove the front wheel. (p. 118)
- Remove the fork legs. (p. 71)
- Remove the headlight mask with the headlight. (p. 129)
- Remove the front top fender. (p. 78)
- Remove the seat. (p. 83)
- Remove the fuel tank. (p. 90)
- Remove the handlebar pad.

Main work

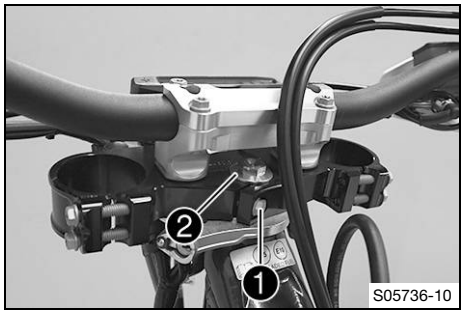

- Loosen screw ❶.
- Remove screw ❷.
- Take off the upper triple clamp with the handlebar and hang them to the side.

Protect the components against damage by covering them.
Do not kink the cables or lines.

- Remove protective ring ❸.
- Take off the lower triple clamp with the steering stem.
- Remove the upper steering head bearing.

12.12 Installing the lower triple clamp

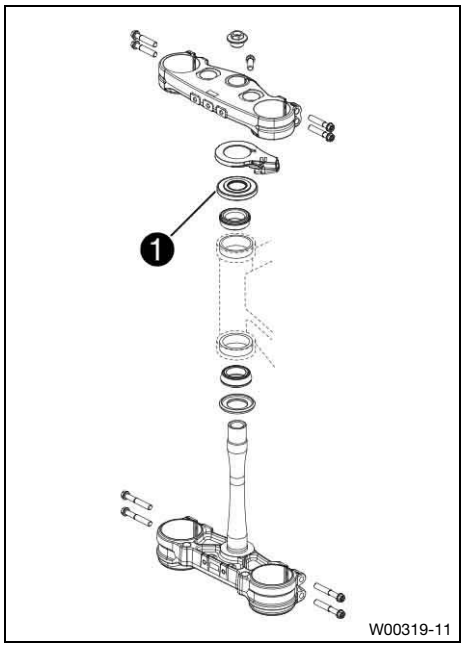

Main work

– Clean the bearing and sealing elements, check for damage, and grease.

High viscosity grease (p. 177)

– Insert the lower triple clamp with the steering stem. Mount the upper steering head bearing.

– Push on protective ring ❶.

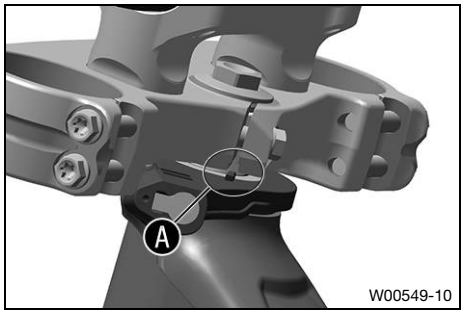

– Make sure the steering lock in area Ⓐ is positioned correctly.

✓ The catch on the steering lock engages in the notch on the triple clamp.

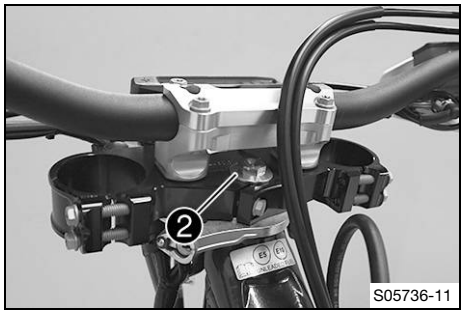

– Position the upper triple clamp and handlebar.

– Mount screw ❷, but do not tighten it yet.

Screw, top steering head	
M20×1.5	12 Nm (8.9 ft·lb_f)

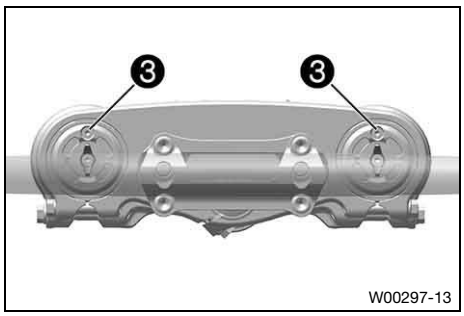

– Position the fork legs.

✓ Bleeder screws ❸ are positioned toward the front.

Note

Grooves are milled into the side of the upper end of the fork legs. The second milled groove (from the top) must be flush with the upper edge of the upper triple clamp.

The pressure and rebound damping is located in the left and right fork leg.

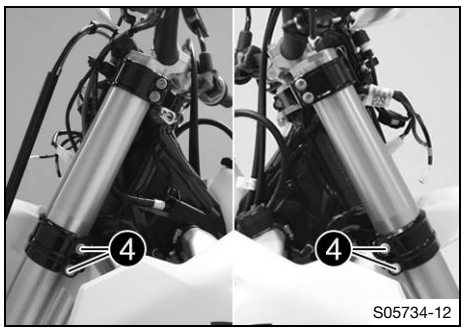

– Tighten screws ❹.

Milled lower triple clamp screw	
M8	12 Nm (8.9 ft·lb$_f$)

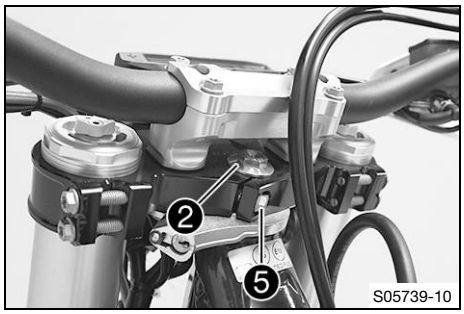

– Tighten screw ❷.

Screw, top steering head	
M20×1.5	12 Nm (8.9 ft·lb$_f$)

– Tighten screw ❺.

Screw, upper steering stem	
M8	20 Nm (14.8 ft·lb$_f$) **Loctite® 243**

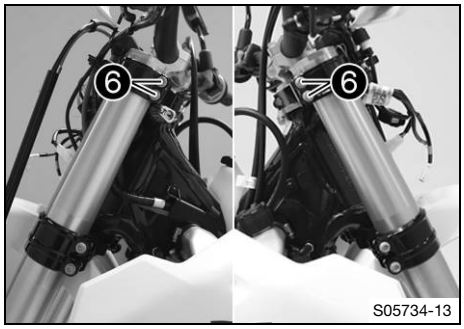

– Tighten screws ❻.

Milled upper triple clamp screw	
M8	17 Nm (12.5 ft·lb$_f$)

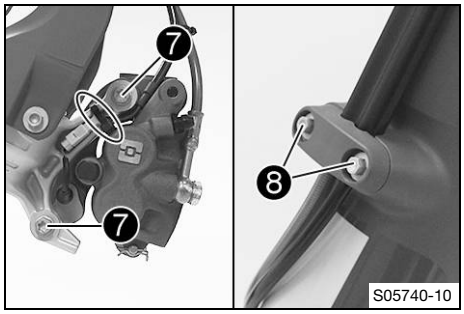

– Position the brake caliper, and mount and tighten screws ❼.

Screw, front brake caliper	
M8	25 Nm (18.4 ft·lb$_f$) **Loctite® 243**

– Mount cable ties.
– Position the brake line, the wiring harness, and the clamp. Mount and tighten screws ❽.

Remaining screws on chassis	
EJOT PT® – K60×25 – Z	2 Nm (1.5 ft·lb$_f$)

Reworking

– Mount the handlebar pad.
– Install the front top fender. (p. 79)
– Install the front wheel. (p. 119)
– Install the headlight mask with the headlight. (p. 130)
– Check the wiring harness, cables, and brake and clutch lines for freedom of movement and correct routing.
– Check the steering head bearing play. (p. 76)
– Remove the motorcycle from the lift stand. (p. 68)
– Check the headlight adjustment. (p. 131)
– Install the fuel tank. (p. 92)
– Mount the seat. (p. 83)

12.13 Checking the steering head bearing play

WARNING

Danger of accidents Incorrect steering head bearing play can impair the handling characteristic and damage components.

– Correct incorrect steering head bearing play immediately.

Note

If the vehicle is operated for a lengthy period with play in the steering head bearing, the bearings and the bearing seats in the frame can become damaged.

Preparatory work

– Raise the motorcycle with a lift stand. (p. 68)

Main work

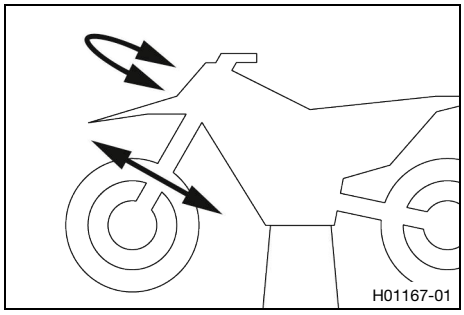

– Move the handlebar to the straight-ahead position. Move the fork legs to and fro in the direction of travel.

Play should not be detectable on the steering head bearing.

» If there is detectable play:
  – Adjust the steering head bearing play. (p. 77)

– Move the handlebar back and forth over the entire steering range.

It must be possible to move the handlebar easily over the entire steering range. There should be no detectable detent positions.

» If detent positions are detected:
  – Adjust the steering head bearing play. (p. 77)
  – Check the steering head bearing and replace if necessary.

Reworking

– Remove the motorcycle from the lift stand. (p. 68)

12.14 Adjusting the steering head bearing play

Preparatory work

– Raise the motorcycle with a lift stand. (p. 68)

Main work

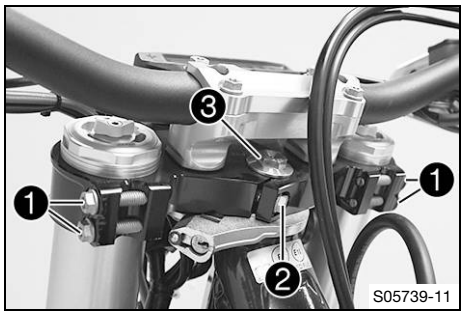

– Loosen screws ❶ and ❷.
– Loosen and retighten screw ❸.

Screw, top steering head	
M20×1.5	12 Nm (8.9 ft·lb$_f$)

– Using a plastic hammer, tap lightly on the upper triple clamp to avoid stresses.
– Tighten screw ❷.

Screw, upper steering stem	
M8	17 Nm (12.5 ft·lb$_f$) **Loctite® 243**

– Tighten screws ❶.

Milled upper triple clamp screw	
M8	17 Nm (12.5 ft·lb$_f$)

Reworking

– Check the steering head bearing play. (p. 76)
– Remove the motorcycle from the lift stand. (p. 68)

12.15 Lubricating the steering head bearing

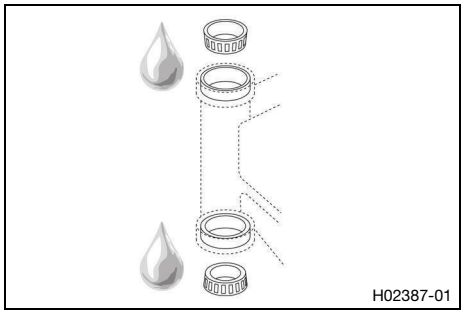

– Remove the lower triple clamp. (p. 73)
– Install the lower triple clamp. (p. 74)

Note
The steering head bearing is cleaned and lubricated in the course of removal and installation of the lower triple clamp.

12.16 Removing the front top fender

Preparatory work
– Remove the headlight mask with the headlight. (p. 129)

Main work
– Remove ❶ screws.
– Remove ❷ screws.
– Remove the front fender.

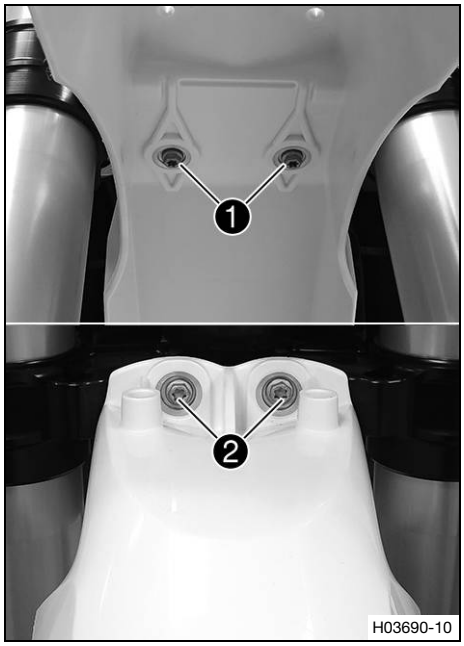

12.17 Installing the front top fender

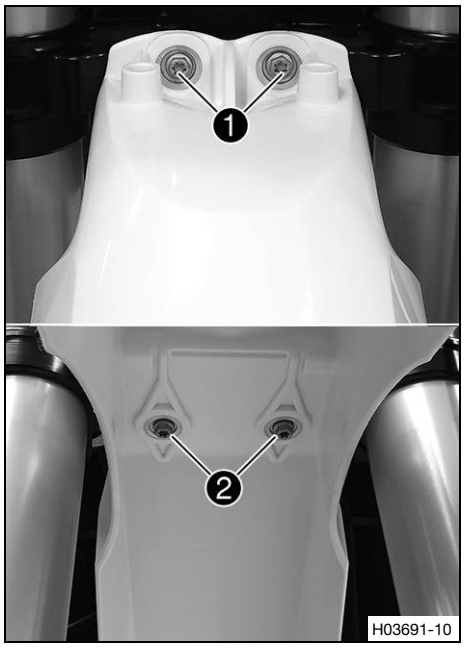

Main work

– Position the front fender.
– Mount and tighten screws ❶.

Remaining screws on chassis	
M6	10 Nm (7.4 ft·lb$_f$)

– Mount and tighten screws ❷.

Remaining screws on chassis	
M6	10 Nm (7.4 ft·lb$_f$)

Reworking

– Install the headlight mask with the headlight. (p. 130)
– Check the headlight adjustment. (p. 131)

12.18 Removing the shock absorber

Preparatory work

– Raise the motorcycle with a lift stand. (p. 68)
– Remove air filter box cover. (p. 84)
– Remove the seat. (p. 83)
– Remove the right side fairing. (p. 86)
– Remove the frame protector. (p. 70)

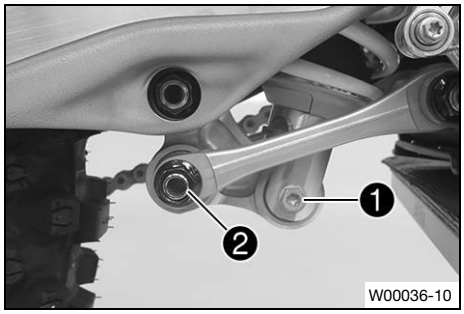

Main work

– Remove screw ❶.
– Remove fitting ❷.

Tip
Raise the swingarm slightly to be able to remove the screws more easily.

– Disconnect the plug-in connector of the brake light switch.

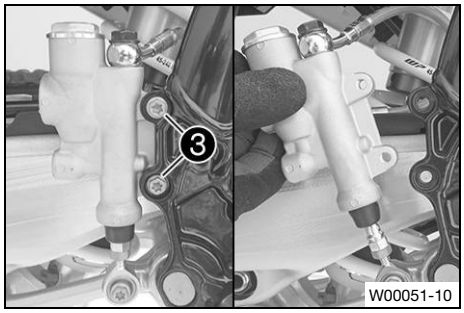

– Remove screws ❸.
– Pull brake cylinder off of the push rod.

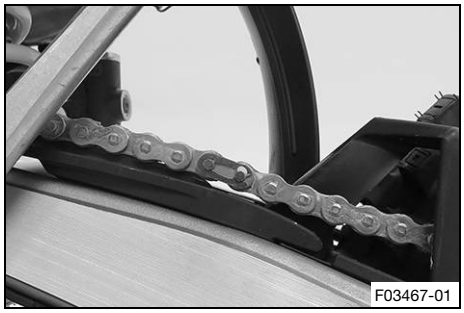

– Remove the connecting link on the chain.

Protect the components against damage by covering them.

– Take off the chain.

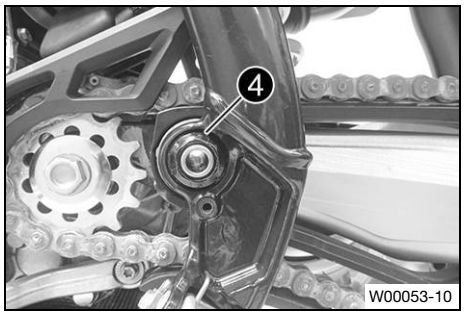

– Remove nut ❹ and pull out the swingarm pivot.
– Push the swingarm back and secure it against falling over.

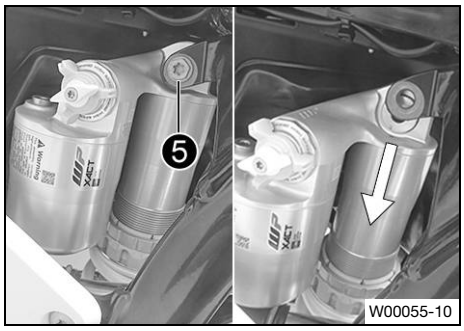

– Hold the shock absorber and remove screw ❺.
– Remove the shock absorber carefully at the bottom.

12.19 Installing the shock absorber

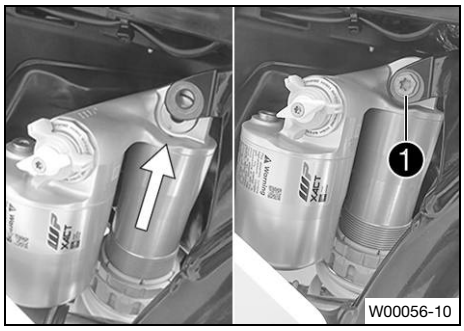

Main work

– Carefully position the shock absorber into the vehicle from the bottom.

– Mount and tighten screw ❶.

Top shock absorber screw	
M10	60 Nm (44.3 ft·lb$_f$) **Loctite® 2701**

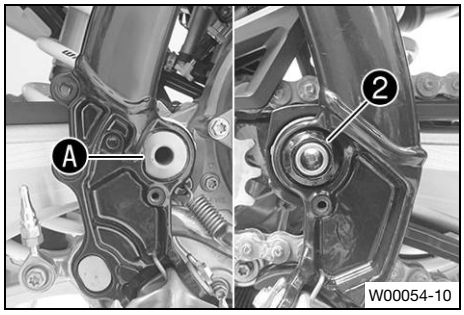

– Position the swingarm and fit the swingarm pivot.

Pay attention to flat area Ⓐ.

– Mount and tighten nut ❷.

Nut, swingarm pivot	
M16×1.5	100 Nm (73.8 ft·lb$_f$)

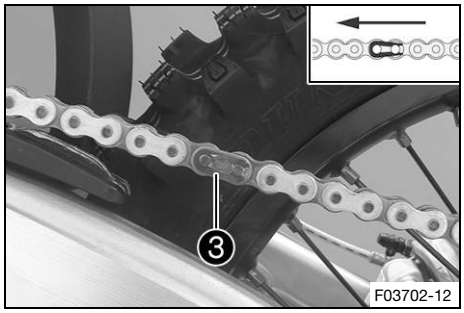

– Mount the chain.

– Connect the chain with connecting link ❸.

The closed side of the master link clip must face in the direction of travel.

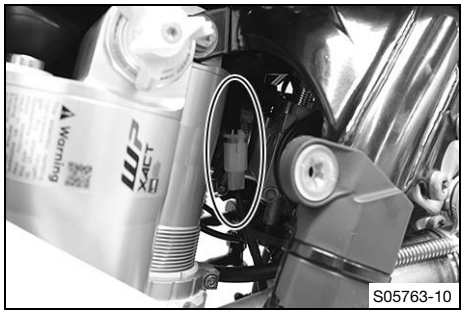

– Join plug-in connector of the brake light switch.

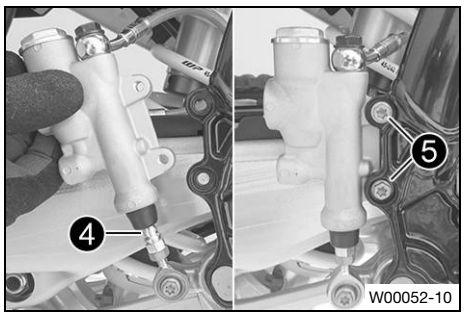

– Position the brake cylinder.
  ✓ Push rod ❹ engages in the brake cylinder.
  ✓ The dust boot is correctly positioned.
– Mount and tighten screws ❺.

Remaining screws on chassis	
M6	10 Nm (7.4 ft·lb$_f$)

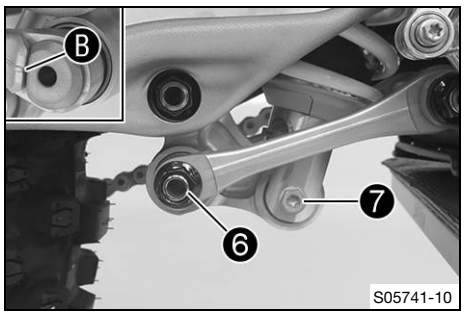

– Position the power valve control lever and linkage lever.
– Mount and tighten screw connection ❻.

Pay attention to flat area Ⓑ.

Nut, linkage lever on angle lever	
M16x1,5	80 Nm (59.0 ft·lb$_f$)

– Mount and tighten screw ❼.

Bottom shock absorber screw	
M10	60 Nm (44.3 ft·lb$_f$) **Loctite® 2701**

Reworking

– Install the frame protector. (p. 71)
– Install the right side cover. (p. 87)
– Mount the seat. (p. 83)
– Install the air filter box cover. (p. 84)
– Remove the motorcycle from the lift stand. (p. 68)

12.20 Removing the seat

– Remove screw ❶.
– Push the seat forward and remove it upward.

12.21 Mounting the seat

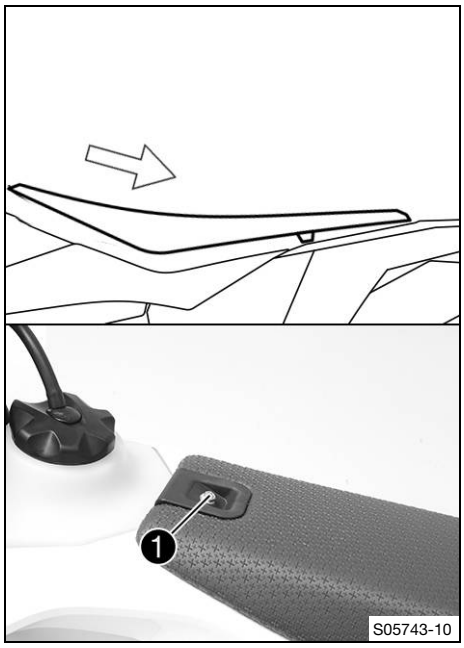

– Mount the front of the seat on the collar bushings of the fuel tank, lower the seat at the rear, and push the seat to the rear.
  ✓ The holding lugs engage in the recesses at the back.
– Make sure the seat is latched in place correctly.
– Mount and tighten screw ❶.

Remaining screws on chassis	
M6	10 Nm (7.4 ft·lb$_f$)

12.22 Removing air filter box cover

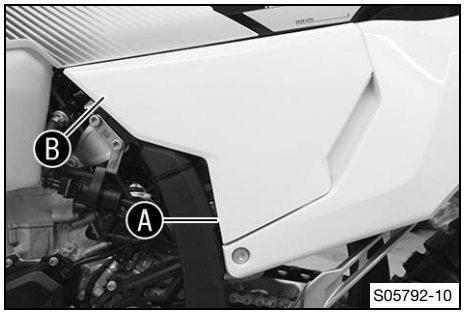

– Pull off the air filter box cover sideways in areas A and B, and take off toward the front.

12.23 Installing air filter box cover

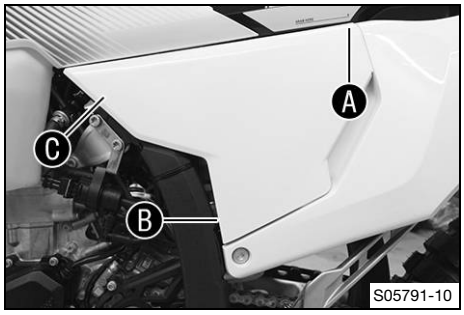

– Attach the air filter box cover in area A and push it backward.
– Allow the air filter box cover to engage in areas B and C.

12.24 Removing the air filter

NOTE

Engine failure Unfiltered intake air has a negative effect on the service life of the engine.
Dust and dirt can enter the engine if there is no air filter or if the air filter is mounted incorrectly.

– Only operate the vehicle if an air filter is correctly fitted.

NOTE

Environmental hazard Hazardous substances cause environmental damage.

– Dispose of oils, grease, filters, fuel, cleaning agents, brake fluid, etc. correctly and in accordance with the applicable regulations.

Preparatory work

– Remove air filter box cover. (p. 84)

Main work

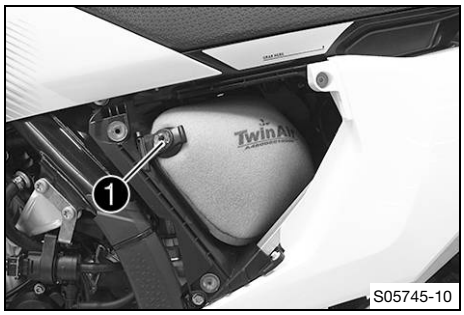

– Detach tab 1.
– Remove air filter with air filter support.
– Remove the air filter with the air filter support.

12.25 Installing the air filter

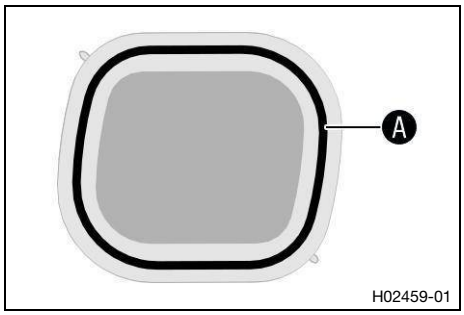

Main work

– Mount the clean air filter on the air filter support.
– Grease the air filter in area A.

Long-life grease (p. 177)

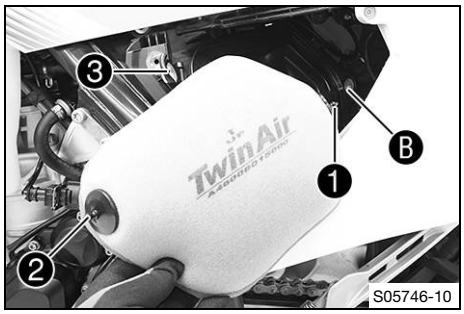

– Insert air filter and position retaining pin 1 in bushing B.
  ✓ The air filter is correctly positioned.
– Attach tab 3.
  ✓ Retaining pin 2 is secured with retaining tab 3.

Note
If the air filter is not mounted correctly, dust and dirt may enter the engine and result in damage.

Reworking

– Install the air filter box cover. (p. 84)

12.26 Cleaning the air filter and air filter box

NOTE
Environmental hazard Hazardous substances cause environmental damage.
– Dispose of oils, grease, filters, fuel, cleaning agents, brake fluid, etc. correctly and in accordance with the applicable regulations.

Preparatory work

– Remove air filter box cover. (p. 84)
– Remove the air filter. (p. 84)

Main work

– Wash the air filter thoroughly in special cleaning liquid and allow it to dry properly.

Do not clean the air filter with fuel or petroleum as these substances will damage the foam rubber.
Only press the air filter to dry it, do not wring it out.

Air filter cleaning agent (p. 179)

– Oil the dry air filter with a high-grade air filter oil.

Oil for foam air filter (p. 178)

– Clean the air filter box.
– Check intake flange for damage and looseness.

Reworking

– Install the air filter. (p. 85)
– Install the air filter box cover. (p. 84)

12.27 Removing the right side fairing

Preparatory work

– Remove the seat. (p. 83)

Main work

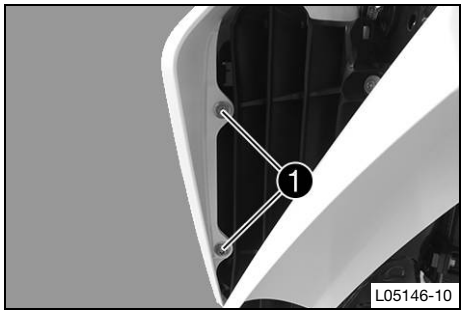

– Remove screws 1.

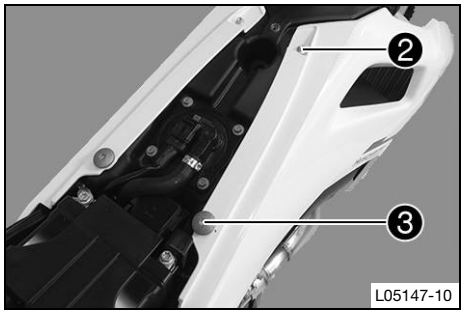

– Remove screw 2.
– Remove screw 3.

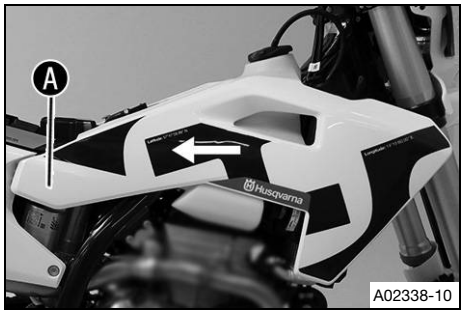

– Detach the side fairing in area A and remove it toward the rear.

12.28 Installing the right side cover

Main work

– Position the right side fairing and press it forward to lock it into place.
– Press the side panel into the rubber bushing in area Ⓐ.

Make sure the side fairing is correctly hooked into area Ⓐ.

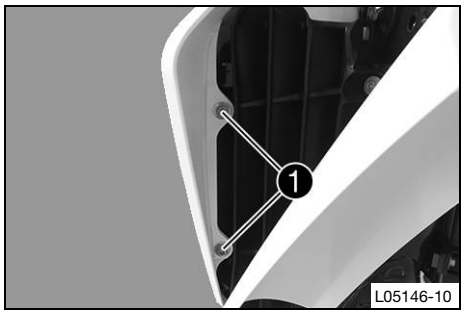

– Mount and tighten screws ❶.

Screw, fuel tank spoiler on radiator	
M6	6 Nm (4.4 ft·lb$_f$)

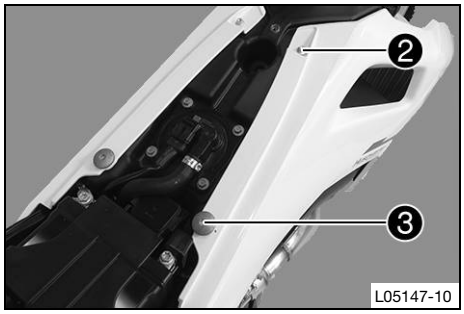

– Mount and tighten screw ❷.

Screw, seat installation	
EJOT EJOFORM® – K60×23/18	2.5 Nm (1.84 ft·lb$_f$)

– Mount and tighten screw ❸.

Screw, seat installation	
EJOT EJOFORM® – K60×23/18	2.5 Nm (1.84 ft·lb$_f$)

Reworking

– Mount the seat. (p. 83)

12.29 Removing the muffler

WARNING

Danger of burns The exhaust system gets hot when the vehicle is driven.

– Allow the exhaust system to cool down before performing any work on the vehicle.

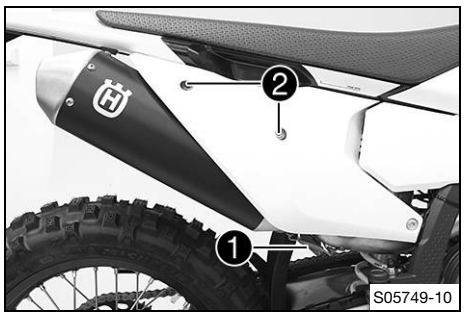

– Detach spring ❶.

Spring hook (50305017000C1)

– Remove screws ❷ and take off the main silencer.

12.30 Installing muffler

– Position the main silencer.
– Mount screws ❶, but do not tighten yet.
– Attach spring ❷.

Spring hook (50305017000C1)

– Tighten screws ❶.

Remaining screws on chassis	
M6	10 Nm (7.4 ft·lb$_f$)

12.31 clean spark arrestor

WARNING
Danger of burns The exhaust system gets hot when the vehicle is driven.
– Allow the exhaust system to cool down before performing any work on the vehicle.

Note
Soot particles accumulate on the screen of the spark arrestor over time.
This changes the performance characteristics.

Preparatory work
– Remove the muffler. (p. 87)

Main work

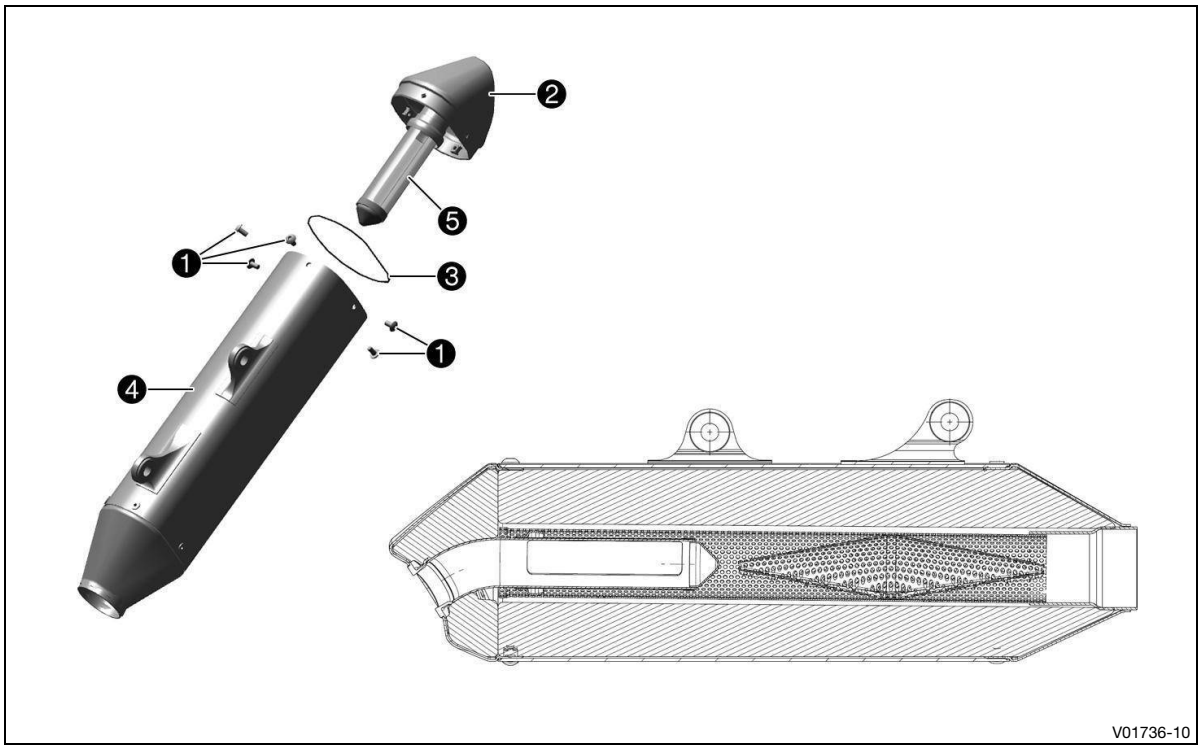

– Remove screws ❶ and take off silencer cap ❷ with O-ring ❸.

Note
Do not remove the glass fiber filling.

CAUTION
Health hazard Soot particles irritate the eyes and mucuous membranes.
– Wear suitable breathing and eye protection when cleaning the main silencer and carbon screen.

– Clean main silencer sleeve ❹ and screen ❺ of the spark arrestor with compressed air.
– Mount new O-ring ❸ on silencer cap ❷.
– Position silencer cap ❷. Mount and tighten screws ❶.

Screws on muffler	
M5	7 Nm (5.2 ft·lb_f)

Reworking
– Install the muffler. (p. 88)

12.32 Changing the damping material on the main silencer

WARNING
Danger of burns The exhaust system gets hot when the vehicle is driven.
– Allow the exhaust system to cool down before performing any work on the vehicle.

Note
Over time, the fibers of the rock wool dissipate and the main silencer “burns out”.
Not only does this make the noise level higher, but the performance characteristics also change.

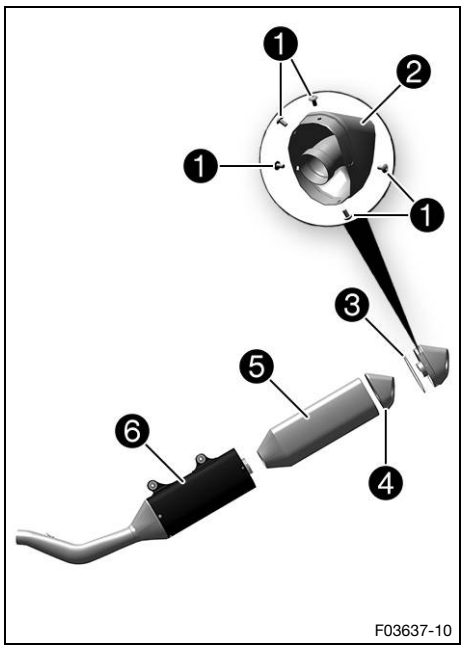

Preparatory work
– Remove the muffler. (p. 87)

Main work
– Remove the screws ❶ on the main silencer.
– Take off silencer cap ❷ and O-ring ❸.
– Pull damping material ❹ out of the silencer cap.
– Pull damping material ❺ off the inner tube.
– Clean the parts that need to be reinstalled and check for damage.
– Mount new damping material ❺ on the inner tube.
– Position new damping material ❹ in the silencer cap.
– Insert O-ring and silencer cap into outer tube ❻.
– Mount and tighten screws ❶.

Screws on muffler	
M5	7 Nm (5.2 ft·lb$_f$)

Reworking
– Install the muffler. (p. 88)

12.33 Removing the fuel tank

DANGER
Fire hazard Fuel is highly flammable.
The fuel in the fuel tank expands when warm and can escape if overfilled.
– Do not refuel the vehicle in the vicinity of open flames, glowing, or smoldering objects.
– Make sure that nobody smokes in the vicinity of the vehicle during the refueling process.
– Switch off the engine for refueling.
– Make sure that no fuel is spilled; particularly not on hot parts of the vehicle.
– If any fuel is spilled, wipe it up immediately.
– Do not overfill the fuel tank.

WARNING

Danger of poisoning Fuel is harmful to health.

- Do not allow fuel to come into contact with skin, eyes, or clothing.
- Consult a doctor immediately if fuel has been ingested.
- Do not inhale fuel vapors.
- Rinse the affected area immediately with plenty of water in the event of contact with skin.
- Rinse eyes thoroughly with water and consult a doctor immediately if fuel comes into contact with eyes.
- If fuel spills on to your clothing, change the clothing.
- Store fuel properly in a suitable container and keep out of the reach of children.

NOTE

Environmental hazard Improper handling of fuel is dangerous to the environment.

- Do not allow fuel to enter the groundwater, the soil, or the sewage system.

Preparatory work

- Remove the seat. (p. 83)

Main work

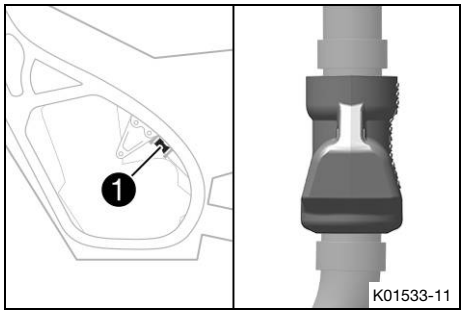

- Remove protection cap ❶ of the fuel line.

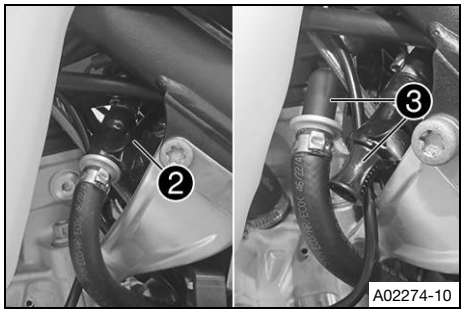

- Clean quick-lock coupling ❷ thoroughly with compressed air.

  Dirt must not enter into the fuel line. Dirt in the fuel line clogs the injector!

- Disconnect the quick-lock coupling.

  Note
  Remaining fuel may flow out of the fuel line.

- Mount wash cap set ❸.

  Wash cap set (81212016100)

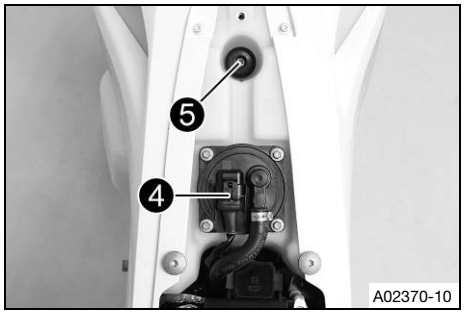

- Unplug socket connector ❹ of the fuel pump.
- Remove screw ❺ with the rubber bushing.
- Remove the hose from the fuel tank breather.

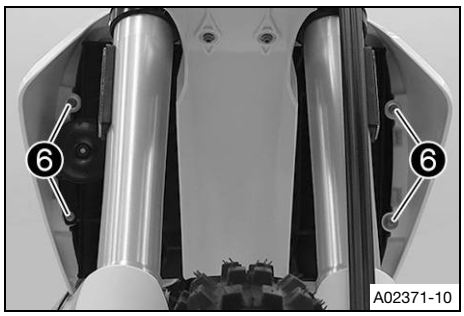

– Remove screws ❻.
– Hang the horn and horn bracket to one side.

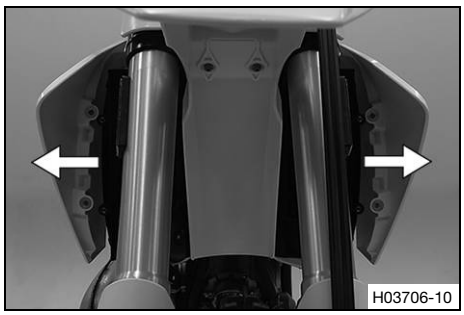

– Pull both spoilers laterally off the radiator and lift off the fuel tank.

12.34 Installing the fuel tank

DANGER
Fire hazard Fuel is highly flammable.
The fuel in the fuel tank expands when warm and can escape if overfilled.
– Do not refuel the vehicle in the vicinity of open flames, glowing, or smoldering objects.
– Make sure that nobody smokes in the vicinity of the vehicle during the refueling process.
– Switch off the engine for refueling.
– Make sure that no fuel is spilled; particularly not on hot parts of the vehicle.
– If any fuel is spilled, wipe it up immediately.
– Do not overfill the fuel tank.

WARNING
Danger of poisoning Fuel is harmful to health.
– Do not allow fuel to come into contact with skin, eyes, or clothing.
– Consult a doctor immediately if fuel has been ingested.
– Do not inhale fuel vapors.
– Rinse the affected area immediately with plenty of water in the event of contact with skin.
– Rinse eyes thoroughly with water and consult a doctor immediately if fuel comes into contact with eyes.
– If fuel spills on to your clothing, change the clothing.
– Store fuel properly in a suitable container and keep out of the reach of children.

NOTE
Environmental hazard Improper handling of fuel is dangerous to the environment.
– Do not allow fuel to enter the groundwater, the soil, or the sewage system.

Main work
– Check the throttle cable routing. (p. 99)

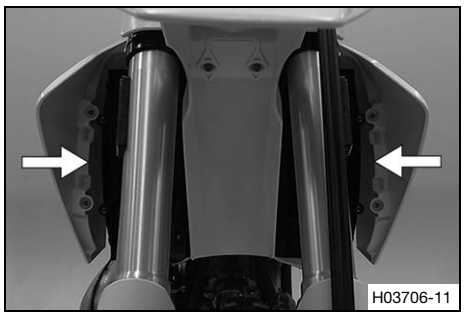

– Position the fuel tank and fit the two spoilers to the sides in front of the radiator bracket.

Make sure that no wires or cables are trapped or damaged.

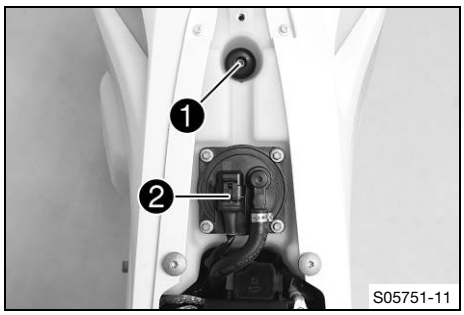

– Attach the fuel tank breather hose.
– Mount and tighten screw ❶ with the rubber bushing.

Remaining screws on chassis	
M6	10 Nm (7.4 ft·lb$_f$)

– Plug in fuel pump socket connector ❷.

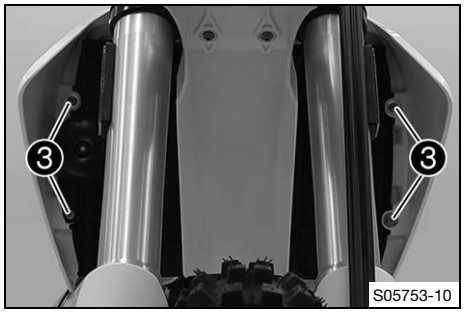

– Position the horn with the horn bracket.
– Mount and tighten screws ❸.

Remaining screws on chassis	
M6	10 Nm (7.4 ft·lb$_f$)

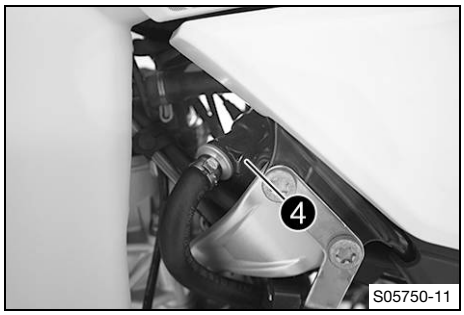

– Remove the wash cap set.
– Clean the quick release coupling thoroughly with compressed air.

Dirt must not enter into the fuel line. Dirt in the fuel line clogs the injector!

– Spray silicone spray onto a lint-free cleaning cloth and lightly lubricate the O-ring of the quick-lock coupling.

Silicone spray (p. 178)

– Join quick release coupling ❹.

Route the wire and fuel line at a safe distance from the exhaust system.

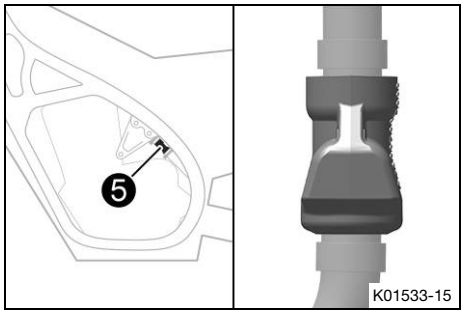

– Mount protection cap ❺ of the fuel line.

Reworking

– Mount the seat. (p. 83)

12.35 Checking the chain for dirt

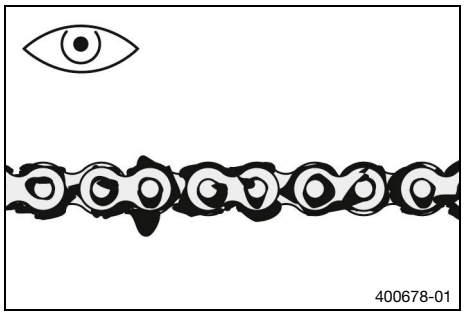

– Check the chain for coarse dirt accumulation.
  » If the chain is very dirty:
    – Clean the chain. (p. 94)

12.36 Cleaning the chain

WARNING
Danger of accidents Oil, grease or wax on the brake discs reduces the brake action.
– Always keep the brake discs free of oil, fat and wax.
– Clean the brake discs with brake cleaner when necessary.

WARNING
Danger of accidents Lubricants on the tires reduces the road grip.
– Remove lubricants from the tires using a suitable cleaning agent.

NOTE
Environmental hazard Hazardous substances cause environmental damage.
– Dispose of oils, grease, filters, fuel, cleaning agents, brake fluid, etc. correctly and in accordance with the applicable regulations.

Note
The service life of the chain depends largely on its maintenance.

Preparatory work

– Raise the motorcycle with a lift stand. (p. 68)

Main work

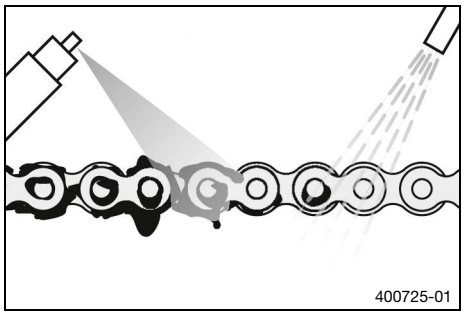

– Rinse off the loose dirt with a gentle jet of water.
– Remove old grease residues with a chain cleaner.

Chain cleaner (p. 179)

– After drying, apply chain spray.

Off-road chain spray (p. 177)

Reworking

– Remove the motorcycle from the lift stand. (p. 68)

12.37 Checking the chain tension

WARNING

Danger of accidents Incorrect chain tension can damage components and result in an accident.

If the chain is tension is too high, the chain, front sprocket, rear sprocket, transmission, and rear wheel bearings wear more quickly. Some components may break if overloaded.

If the chain is too loose, the chain may fall off the front sprocket or the rear sprocket. This can damage the rear wheel or the engine.

– Check the chain tension regularly.
– Set the chain tension in accordance with the specification.

Preparatory work

– Raise the motorcycle with a lift stand. (p. 68)

Main work

– Pull the chain at the end of the chain slider upward to measure chain tension A.

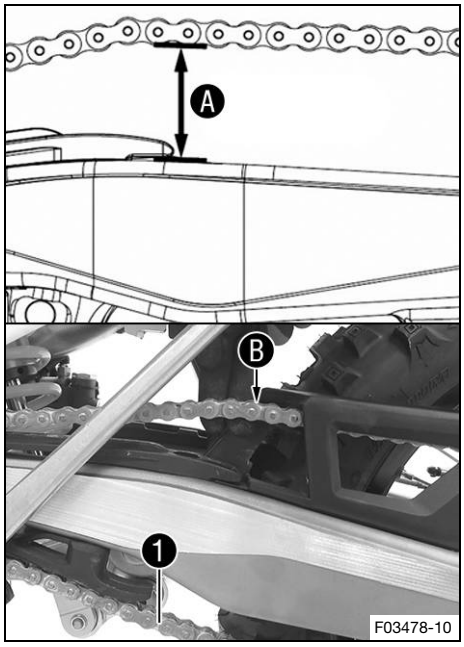

Chain tension	58 mm … 61 mm (2.28 in … 2.40 in)
Lower chain section 1 must be taut.	
When the chain guard is mounted, it must be possible to pull up the chain at least to the point where it makes contact with chain guard B.	
Repeat this measurement at different chain positions.	

Note

Chains do not always wear evenly.

» If the chain tension does not meet the specification:
  – Adjust the chain tension. (p. 96)

Reworking

– Remove the motorcycle from the lift stand. (p. 68)

12.38 Adjusting the chain tension

WARNING

Danger of accidents Incorrect chain tension can damage components and result in an accident.

If the chain is tension is too high, the chain, front sprocket, rear sprocket, transmission, and rear wheel bearings wear more quickly. Some components may break if overloaded.

If the chain is too loose, the chain may fall off the front sprocket or the rear sprocket. This can damage the rear wheel or the engine.

– Check the chain tension regularly.
– Set the chain tension in accordance with the specification.

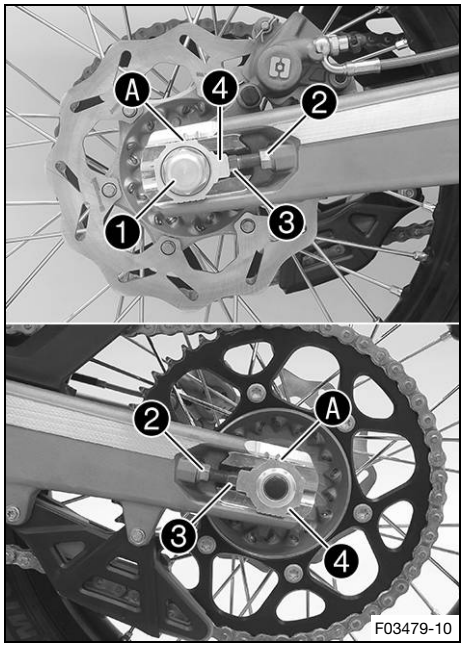

Preparatory work

– Raise the motorcycle with a lift stand. (p. 68)

Main work

– Loosen nut ❶.
– Loosen nuts ❷.
– Adjust the chain tension by turning adjusting screws ❸ on the left and right.

Chain tension	58 mm … 61 mm (2.28 in … 2.40 in)
In order for the rear wheel to be correctly aligned, the markings on the left and right chain adjusters must be in the same position relative to reference markings Ⓐ.	

– Tighten nuts ❷.
– Make sure that chain tension adjusters ❹ are fitted correctly on adjusting screws ❸.
– Tighten nut ❶.

Nut, wheel spindle, rear	
M22	80 Nm (59.0 ft·lb_f)

Note

The wide adjustment range of the chain adjusters enables different secondary ratios with the same chain length.

Chain tension adjusters ❹ can be turned by 180°.

Reworking

– Check the chain tension. (p. 95)
– Remove the motorcycle from the lift stand. (p. 68)

12.39 Checking the chain, rear sprocket, front sprocket, and chain guide

Preparatory work

– Raise the motorcycle with a lift stand. (p. 68)

Main work

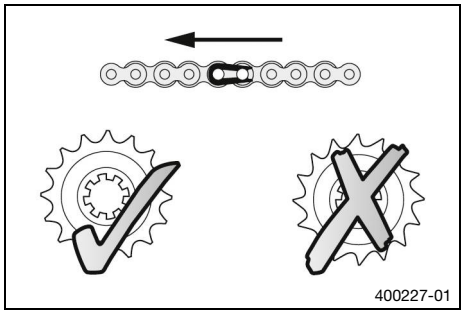

– Shift the transmission into the neutral position.
– Check the chain, rear sprocket, and front sprocket for wear.
  » If the chain, rear sprocket or engine sprocket is worn:
    – Change the drivetrain kit.

Always replace the front sprocket, rear sprocket, and chain together.

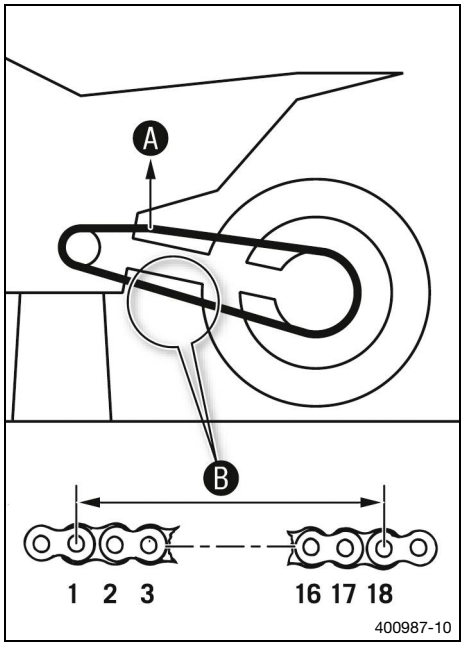

– Pull on the top section of the chain with the specified weight A.

Weight, chain wear measurement	10 kg … 15 kg (22.0 lb … 33.1 lb)

– Measure distance B of chain rollers in the lower chain section.

Maximum distance B of chain rollers at the longest chain section	272 mm (10.71 in)
Chain wear is not always even, so repeat this measurement at different positions on the chain.	

  » If distance B is greater than the specified measurement:
    – Change the drivetrain kit.

When installing a new chain, also replace the rear sprocket and front sprocket.

Note
New chains wear out faster on old, worn sprockets.

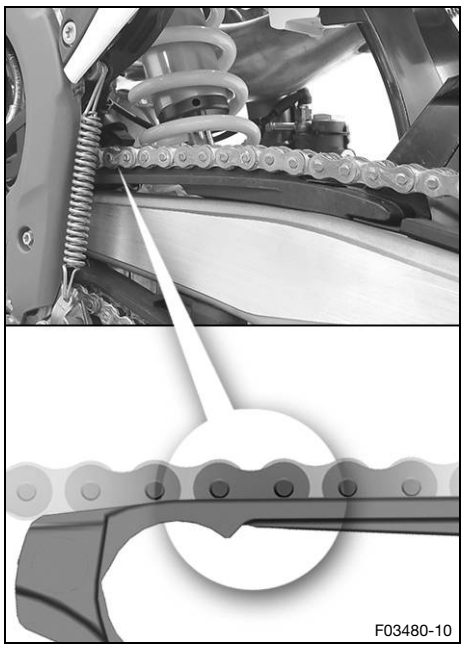

– Check the chain slider at the top for wear.
  » If the lower edge of the chain pins is in line with, or below, the chain slider:
    – Change the chain slider.
– Check that the chain slider is firmly seated.
  » If the chain slider is loose:
    – Tighten the screws of the chain slider.

Screw, chain slider guard	
M6	6 Nm (4.4 ft·lb$_f$) **Loctite® 243**

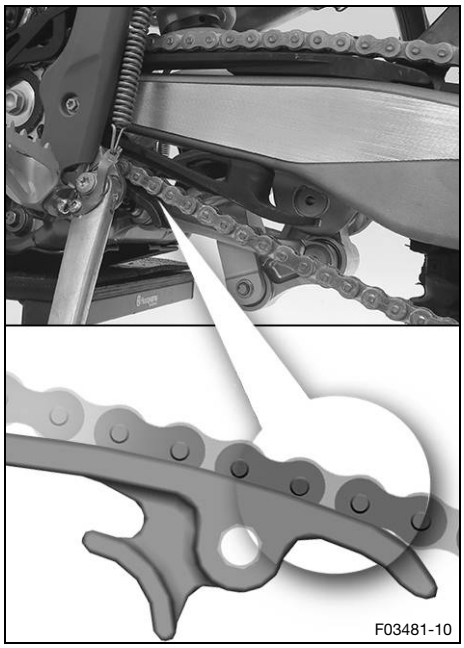

– Check the chain slider for wear.
  » If the lower edge of the chain pins is in line with or below the chain slider:
    – Change the chain slider.
– Check that the chain slider is firmly seated.
  » If the chain slider is loose:
    – Tighten the screw of the chain sliding piece.

Screw, chain slider	
M8	15 Nm (11.1 ft·lb$_f$)

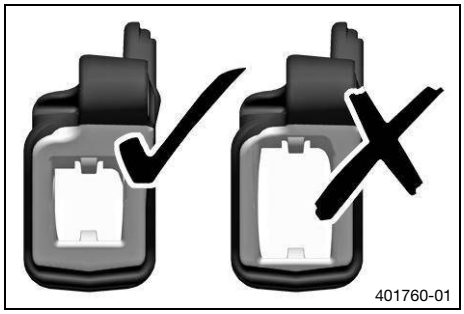

– Check the chain guide for wear.

Note
Wear can be seen on the front of the chain guide.

  » If the light part of the chain guide is worn:
    – Change the chain guide.

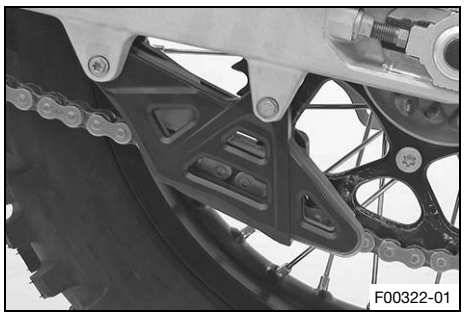

– Check that the chain guide is firmly seated.
  » If the chain guide is loose:
    – Tighten the screws on the chain guide.

Remaining screws on chassis	
M6	10 Nm (7.4 ft·lb$_f$)
Remaining nuts on chassis	
M6	10 Nm (7.4 ft·lb$_f$)

Reworking

– Remove the motorcycle from the lift stand. (p. 68)

12.40 Checking the frame

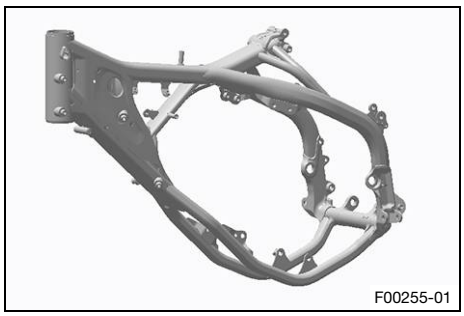

– Check the frame for damage, cracks, and deformation.
  » If the frame shows signs of damage, cracks, or deformation:
    – Change the frame.

Repairs on the frame are not permitted.

12.41 Checking the swingarm

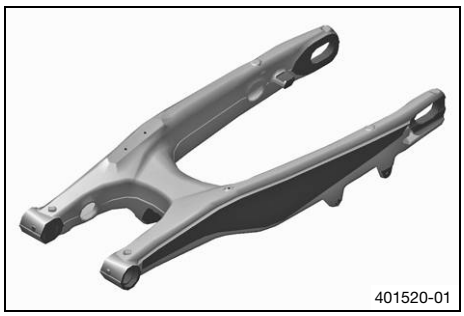

– Check the swingarm for damage, cracks, and deformation.
  » If the swingarm shows signs of damage, cracks, or deformation:
    – Change the swingarm.

Repairs on the swingarm are not permitted.

12.42 Checking the throttle cable routing

WARNING

Danger of accidents The throttle cable can become kinked, jammed, or blocked if it has been routed incorrectly.

If the throttle cable is kinked, jammed or blocked, the speed can no longer be controlled.

– Make sure that the throttle cable routing and the play in the throttle cable complies with the specification.

Preparatory work

– Remove the seat. (p. 83)
– Remove the fuel tank. (p. 90)

Main work

– Check the throttle cable routing.

Both throttle cables must be routed, side by side, on the back of the handlebars and above the fuel tank bracket, to the throttle valve body. Both throttle cables must be secured behind the rubber strap of the fuel tank support.

» If the throttle cable routing is not as specified:
  – Correct the throttle cable routing.

Reworking

– Install the fuel tank. (p. 92)
– Mount the seat. (p. 83)

12.43 Checking the hand grip

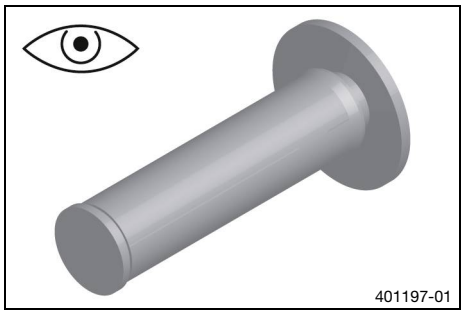

– Check the hand grips on the handlebar for damage, wear, and that they are firmly seated.

Note

The hand grips are vulcanized onto a sleeve on the left and onto the grip tube of the throttle grip on the right. The left sleeve is clamped onto the handlebar.

The hand grip can only be replaced with the sleeve or the gas pipe.

» If a rubber grip is damaged, worn, or loose:
  – Replace the hand grip.

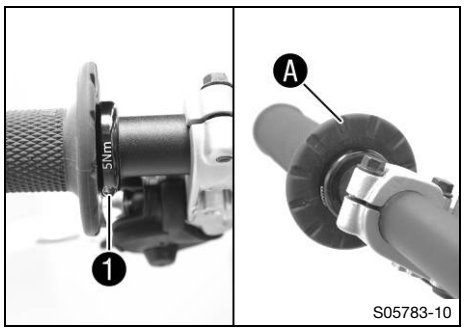

– Check that screw ❶ is firmly seated.

Screw, fixed grip	
M4	5 Nm (3.7 ft·lb$_f$) **Loctite® 243**

Diamond Ⓐ must be positioned visibly as shown in the figure.

12.44 Adjusting the basic position of the clutch lever

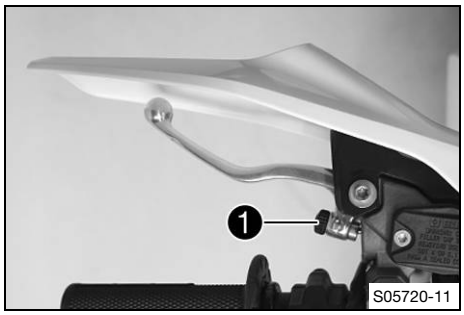

– Adjust the basic position of the clutch lever to your hand size by turning adjusting screw ❶.

Only turn the adjusting screw by hand, and do not use force.
Do not make any adjustments while riding.

Note

When the adjusting screw is turned clockwise, the clutch lever moves away from the handlebar.

When the adjusting screw is turned counterclockwise, the clutch lever moves closer to the handlebar.

The range of adjustment is limited.

12.45 Checking/correcting the fluid level of hydraulic clutch

WARNING

Health hazard Brake fluid is a harmful substance.

- Keep brake fluid out of the reach of children.
- Wear suitable protective clothing and safety glasses.
- Do not allow brake fluid to come into contact with the skin, the eyes, or clothing.
- Consult a doctor immediately if brake fluid has been ingested.
- Rinse the affected area with plenty of water in the event of contact with the skin.
- Rinse eyes thoroughly with water immediately and consult a doctor if brake fluid comes into contact with the eyes.
- If brake fluid spills on to your clothing, change the clothing.

NOTE

Environmental hazard Hazardous substances cause environmental damage.

- Dispose of oils, grease, filters, fuel, cleaning agents, brake fluid, etc. correctly and in accordance with the applicable regulations.

Note

The fluid level rises with increasing wear of the friction plates.

Avoid contact between brake fluid and painted parts. Brake fluid corrodes paint.

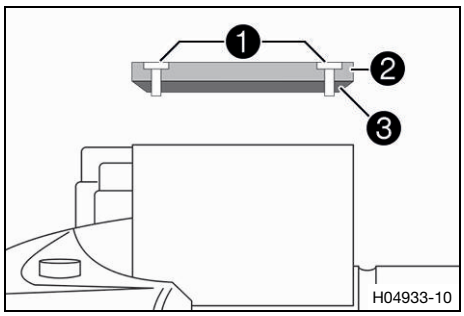

– Move the hydraulic clutch fluid reservoir mounted on the handlebar into a horizontal position.
– Remove ❶ screws.
– Take off cover ❷ with diaphragm ❸.
– Check the fluid level.

Fluid level below reservoir rim	4 mm (0.16 in)

» If the fluid level does not meet the specifications:
  – Correct the fluid level of the hydraulic clutch.

  Brake fluid DOT 5.1 (p. 178)

– Position the cover with diaphragm. Mount and tighten the screws.

Immediately clean up any brake fluid that has overflowed or spilled with water.

12.46 Changing the hydraulic clutch fluid

WARNING

Health hazard Brake fluid is a harmful substance.
– Keep brake fluid out of the reach of children.
– Wear suitable protective clothing and safety glasses.
– Do not allow brake fluid to come into contact with the skin, the eyes, or clothing.
– Consult a doctor immediately if brake fluid has been ingested.
– Rinse the affected area with plenty of water in the event of contact with the skin.
– Rinse eyes thoroughly with water immediately and consult a doctor if brake fluid comes into contact with the eyes.
– If brake fluid spills on to your clothing, change the clothing.

NOTE

Environmental hazard Hazardous substances cause environmental damage.
– Dispose of oils, grease, filters, fuel, cleaning agents, brake fluid, etc. correctly and in accordance with the applicable regulations.

Note

Avoid contact between brake fluid and painted parts. Brake fluid corrodes paint.

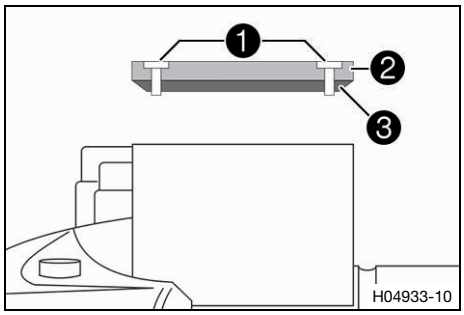

– Move the hydraulic clutch fluid reservoir mounted on the handlebar into a horizontal position.
– Remove ❶ screws.
– Take off cover ❷ with diaphragm ❸.

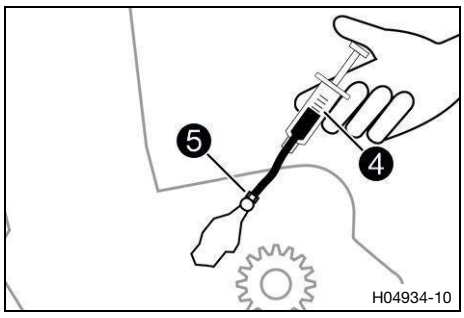

– Fill bleeding syringe ❹ with the appropriate hydraulic fluid.

Syringe (50329050000)
Brake fluid DOT 5.1 (p. 178)

– On the clutch slave cylinder, remove the protection cap, remove bleeder screw ❺ and mount bleeding syringe ❹.

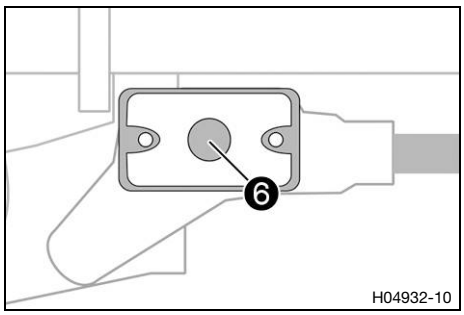

– Now inject fluid into the system until it escapes from the openings ❻ of the master cylinder without bubbles.
– Occasionally extract the fluid from the master cylinder reservoir to prevent overflowing.
– Remove the bleeding syringe. Mount and tighten the bleeder screw. Mount the protection cap.
– Correct the fluid level of the hydraulic clutch.

Fluid level below reservoir rim	4 mm (0.16 in)

– Position the cover with diaphragm. Mount and tighten the screws.

Immediately clean up any brake fluid that has overflowed or spilled with water.

12.47 Removing the skid plate

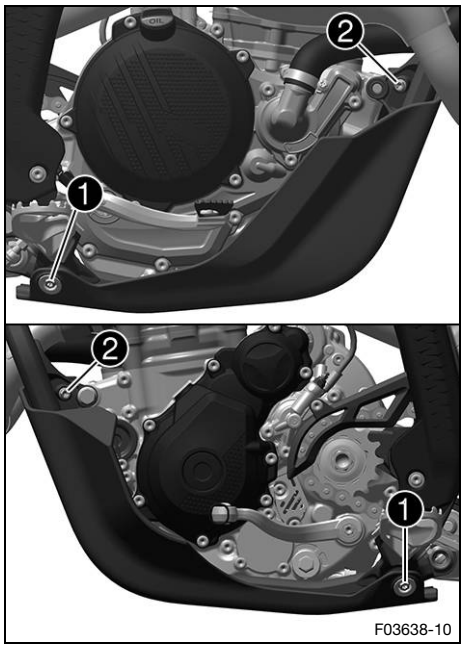

– Remove screws ❶ with the bushings.
– Remove screws ❷.
– Take off the skid plate.

12.48 Installing the skid plate

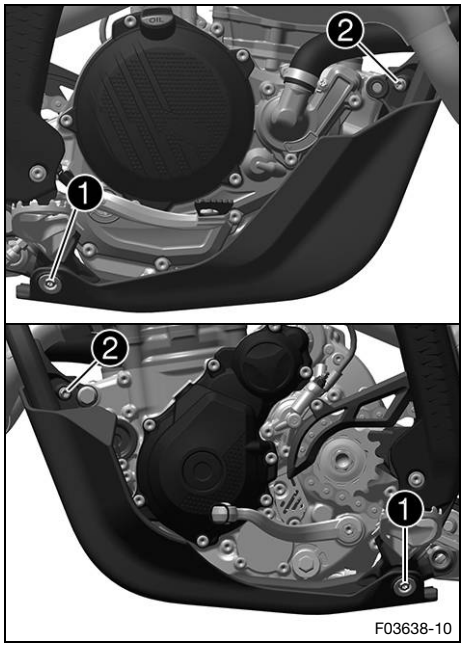

– Mount screws ❶ with the bushings and tighten.

Remaining screws on chassis	
M6	10 Nm (7.4 ft·lb$_f$)

– Mount and tighten screws ❷.

Remaining screws on chassis	
M6	10 Nm (7.4 ft·lb$_f$)

13.1 Checking the free travel on the hand brake lever

WARNING
Danger of accidents The brake system fails in the event of overheating.
If there is no free travel on the brake lever, pressure builds up in the brake system.
– Set the free travel on the brake lever as specified.

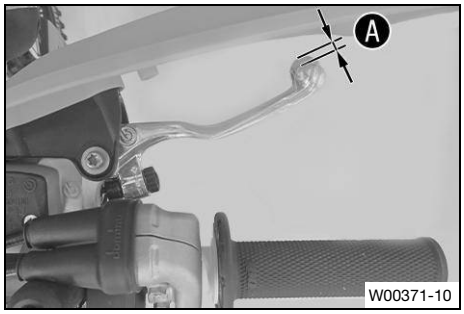

– Push the hand brake lever to the handlebar and check free travel A.

Free travel of hand brake lever	≥ 3 mm (≥ 0.12 in)

» If the free travel does not meet the specifications:
  – Adjust the free travel of the handbrake lever. (p. 105)

13.2 Adjusting the free travel of the handbrake lever

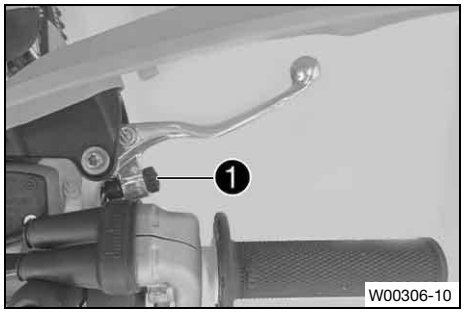

– Check the free travel on the hand brake lever. (p. 105)
– Adjust the free travel of the hand brake lever with adjusting screw 1.

Only turn the adjusting screw by hand, and do not use force.
Do not make any adjustments while riding.

Note
Turn the adjusting screw clockwise to reduce free travel. The pressure point moves away from the handlebar.
Turn the adjusting screw counterclockwise to increase free travel. The pressure point moves towards the handlebar.
The range of adjustment is limited.

13.3 Checking the brake discs

WARNING
Danger of accidents Worn-out brake discs reduce the braking action.
– Make sure that worn-out brake discs are replaced immediately.

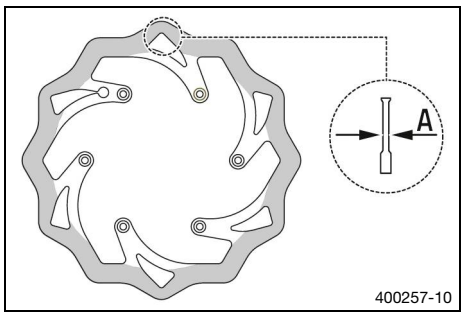

– Check the brake disc thickness of the front and rear brake disc at several places on the disc to see if they conform to measurement Ⓐ.

Brake disc wear limit	
front	2.5 mm (0.098 in)
rear	3.5 mm (0.138 in)

Note
Wear reduces the thickness of the brake discs at the contact surface of the brake pads.

» If the brake disc thickness is less than the specified value:
  – Change the brake discs of the front brake.
  – Change the brake discs on the rear brake.

– Check the front and rear brake discs for damage, cracks, and deformation.
  » If the brake disc shows signs of damage, cracks, or deformation:
    – Change the brake discs of the front brake.
    – Change the brake discs on the rear brake.

13.4 Checking the brake fluid level for the front brake

WARNING
Danger of accidents Brake fluid which is too old or of the wrong type impairs the function of the brake system.
– Make sure that brake fluid for the front and rear brake is changed in accordance with the service schedule.
– Make sure that only clean, approved brake fluid from a tightly sealed container is used.

WARNING
Danger of accidents An insufficient brake fluid level will cause the brake system to fail.
If the brake fluid level drops below the specified marking or the specified value, the brake system has a leak or the brake pads are worn down.
– Have the brake system checked and make sure that the problem has been eliminated before the vehicle is used again.

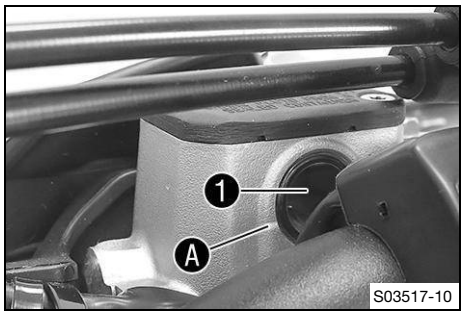

– Move the brake reservoir mounted on the handlebar to a horizontal position.
– Check the brake fluid level in sight glass ❶.
  » If the brake fluid level has fallen below marking Ⓐ:
    – Add brake fluid for the front brake. (p. 107)

13.5 Adding brake fluid for the front brake

WARNING

Danger of accidents Brake fluid which is too old or of the wrong type impairs the function of the brake system.

- Make sure that brake fluid for the front and rear brake is changed in accordance with the service schedule.
- Make sure that only clean, approved brake fluid from a tightly sealed container is used.

WARNING

Danger of accidents An insufficient brake fluid level will cause the brake system to fail.

If the brake fluid level drops below the specified marking or the specified value, the brake system has a leak or the brake pads are worn down.

- Have the brake system checked and make sure that the problem has been eliminated before the vehicle is used again.

WARNING

Health hazard Brake fluid is a harmful substance.

- Keep brake fluid out of the reach of children.
- Wear suitable protective clothing and safety glasses.
- Do not allow brake fluid to come into contact with the skin, the eyes, or clothing.
- Consult a doctor immediately if brake fluid has been ingested.
- Rinse the affected area with plenty of water in the event of contact with the skin.
- Rinse eyes thoroughly with water immediately and consult a doctor if brake fluid comes into contact with the eyes.
- If brake fluid spills on to your clothing, change the clothing.

NOTE

Environmental hazard Hazardous substances cause environmental damage.

- Dispose of oils, grease, filters, fuel, cleaning agents, brake fluid, etc. correctly and in accordance with the applicable regulations.

Note

Avoid contact between brake fluid and painted parts. Brake fluid corrodes paint.

Preparatory work

- Check that the brake pads of the front brake are secured. (p. 108)

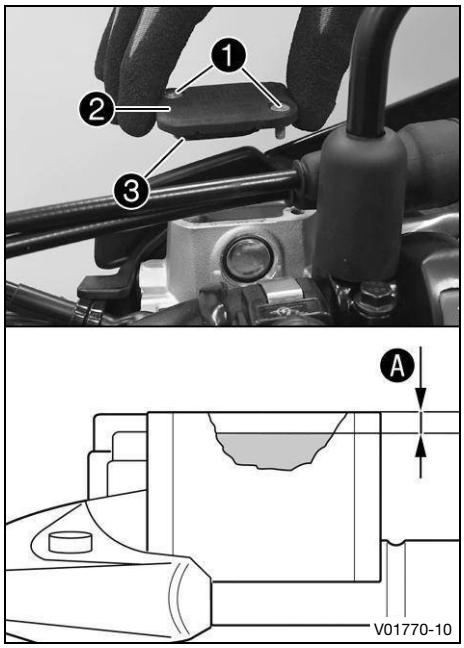

Main work

– Move the brake reservoir mounted on the handlebar to a horizontal position.
– Remove ❶ screws.
– Take off cover ❷ with diaphragm ❸.
– Add brake fluid up to level Ⓐ.

Level Ⓐ (brake fluid level below reservoir rim)	5 mm (0.20 in)

Brake fluid DOT 5.1 (p. 178)

– Position the cover with diaphragm. Mount and tighten the screws.

Immediately clean up any brake fluid that has overflowed or spilled with water.

13.6 Checking that the brake pads of the front brake are secured

WARNING
Danger of accidents Worn brake pads reduce the brake action.
– Make sure that worn brake pads are replaced immediately.

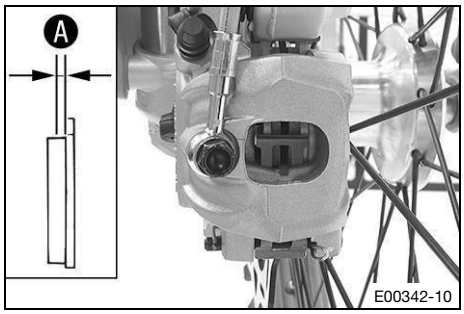

– Check all brake pads on both brake calipers for their lining thickness Ⓐ.

Minimum pad thickness Ⓐ	≥ 1 mm (≥ 0.04 in)

» If it is less than the minimum thickness:
  – Change the front brake pads. (p. 109)
– Check the brake linings for damage and cracking.
» If there is damage or cracking:
  – Change the front brake pads. (p. 109)
– Check that the brake pads are secured.
» If the brake pads are not secured correctly:
  – Secure brake pads, replace with new parts if necessary.

13.7 Changing the brake pads of the front brake

WARNING
Danger of accidents Brake pads which have not been approved alter the braking action.
– Only use brake pads approved and recommended by the vehicle manufacturer.

WARNING
Danger of accidents Incorrect servicing will cause the brake system to fail.
– Ensure that service work and repairs are performed professionally.

WARNING
Danger of accidents Brake fluid which is too old or of the wrong type impairs the function of the brake system.
– Make sure that brake fluid for the front and rear brake is changed in accordance with the service schedule.
– Make sure that only clean, approved brake fluid from a tightly sealed container is used.

WARNING
Danger of accidents Oil, grease or wax on the brake discs reduces the brake action.
– Always keep the brake discs free of oil, fat and wax.
– Clean the brake discs with brake cleaner when necessary.

WARNING
Health hazard Brake fluid is a harmful substance.
– Keep brake fluid out of the reach of children.
– Wear suitable protective clothing and safety glasses.
– Do not allow brake fluid to come into contact with the skin, the eyes, or clothing.
– Consult a doctor immediately if brake fluid has been ingested.
– Rinse the affected area with plenty of water in the event of contact with the skin.
– Rinse eyes thoroughly with water immediately and consult a doctor if brake fluid comes into contact with the eyes.
– If brake fluid spills on to your clothing, change the clothing.

NOTE
Environmental hazard Hazardous substances cause environmental damage.
– Dispose of oils, grease, filters, fuel, cleaning agents, brake fluid, etc. correctly and in accordance with the applicable regulations.

Note
Avoid contact between brake fluid and painted parts. Brake fluid corrodes paint.

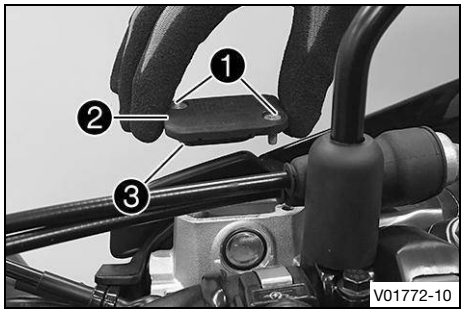

– Move the brake reservoir mounted on the handlebar to a horizontal position.
– Remove screws ❶.
– Take off cover ❷ with diaphragm ❸.

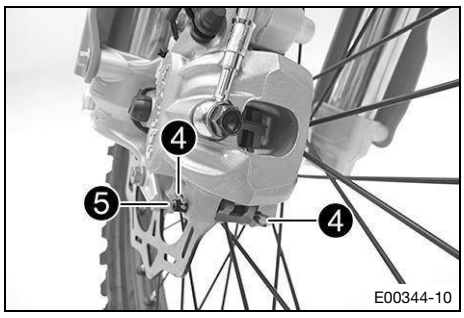

– Manually press the brake caliper toward the brake disc to push back the brake pistons. Ensure that brake fluid does not flow out of the brake fluid reservoir; extract some if necessary.
– Remove cotter pin ❹.
– Pull out pin ❺.
– Remove the brake pads.
– Clean brake caliper and brake caliper support.

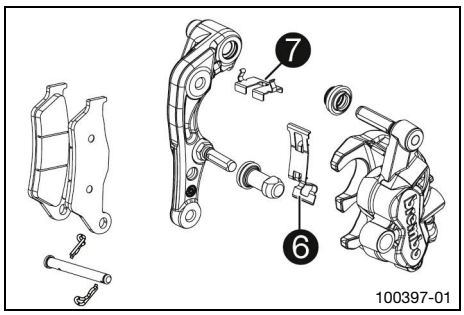

– Check that spring steel clip ❻ in the brake caliper and brake pad guide plate ❼ in the brake caliper support are properly seated.

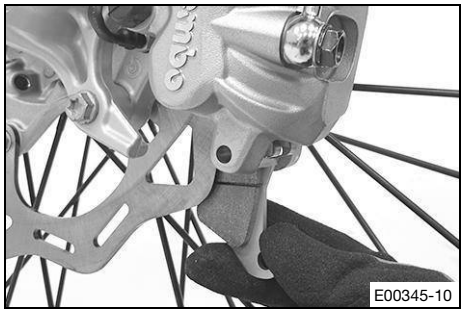

– Insert the new brake linings.

Always replace brake pads in sets.

– Insert bolt.
– Mount cotter pin.

Make sure the brake pads and retaining spring are properly seated.
Mount the outer cotter pins from the front to the rear. Mount the inner cotter pins from the rear to the front.

– Operate the hand brake lever repeatedly until the brake pads are in contact with the brake disc and a pressure point is reached.

Tip
To make it easier to mount the stud, push the brake pads upward against the retaining spring.

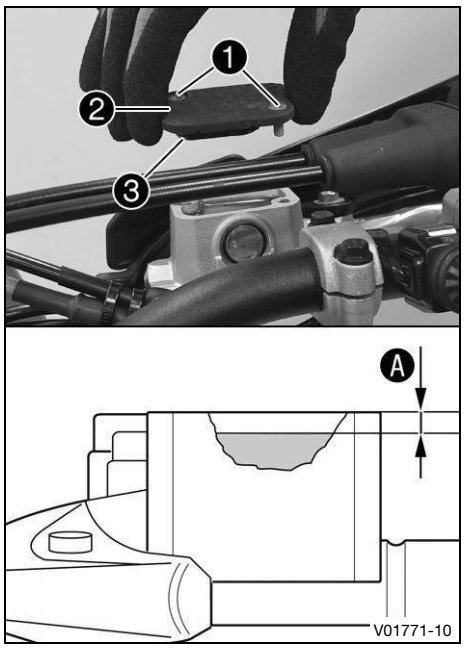

– Correct the brake fluid level to level A.

Level A (brake fluid level below reservoir rim)	5 mm (0.20 in)

Brake fluid DOT 5.1 (p. 178)

– Position cover 2 with diaphragm 3.
– Mount and tighten screws 1.

Immediately clean up any brake fluid that has overflowed or spilled with water.

13.8 Checking the free travel of the brake pedal

WARNING
Danger of accidents The brake system fails in the event of overheating.
If there is no free travel on the brake lever, pressure builds up in the brake system.
– Set the free travel on the brake lever as specified.

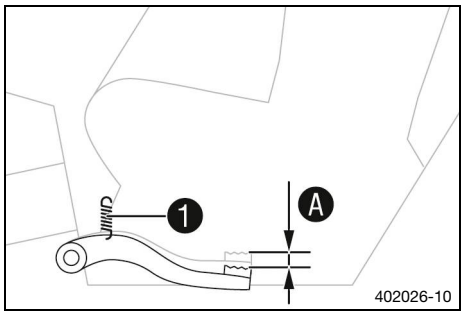

– Detach spring 1.
– Move the brake pedal back and forth between the end stop and the brake pedal cylinder piston actuation and check free travel A.

Free travel of brake pedal	3 mm … 5 mm (0.12 in … 0.20 in)

» If the free travel does not meet the specifications:
  – Adjust the basic position of the brake pedal. (p. 111)
– Attach spring 1.

13.9 Adjusting the basic position of the brake pedal

WARNING
Danger of accidents The brake system fails in the event of overheating.
If there is no free travel on the brake lever, pressure builds up in the brake system.
– Set the free travel on the brake lever as specified.

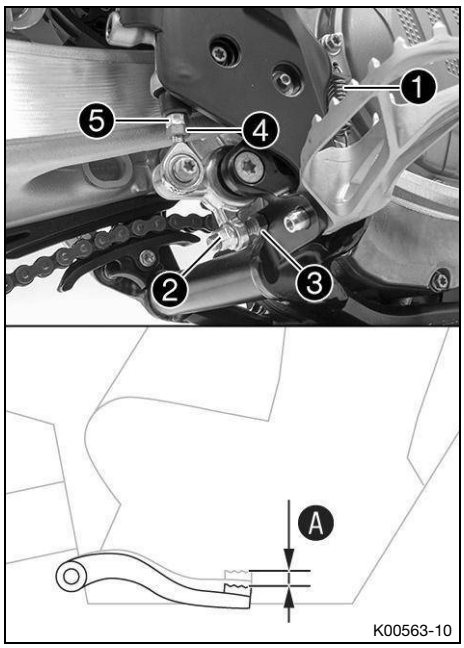

– Detach spring ❶.
– Loosen nut ❹ and unscrew it with push rod ❺ until you have maximum free travel.
– To adjust the basic position of the brake pedal to individual requirements, loosen nut ❷ and turn screw ❸ accordingly.

Note
The range of adjustment is limited.

– Turn push rod ❺ accordingly until you have free travel Ⓐ. If necessary, adjust the basic position of the brake pedal.

Free travel of brake pedal	3 mm … 5 mm (0.12 in … 0.20 in)

– Hold screw ❸ and tighten nut ❷.

Rear brake lever stop nut	
M8	20 Nm (14.8 ft·lb$_f$)

– Hold push rod ❺ and tighten nut ❹.

Remaining nuts on chassis	
M6	10 Nm (7.4 ft·lb$_f$)

– Attach spring ❶.

13.10 Checking the brake fluid level for the rear brake

WARNING
Danger of accidents Brake fluid which is too old or of the wrong type impairs the function of the brake system.
– Make sure that brake fluid for the front and rear brake is changed in accordance with the service schedule.
– Make sure that only clean, approved brake fluid from a tightly sealed container is used.

WARNING
Danger of accidents An insufficient brake fluid level will cause the brake system to fail.
If the brake fluid level drops below the specified marking or the specified value, the brake system has a leak or the brake pads are worn down.
– Have the brake system checked and make sure that the problem has been eliminated before the vehicle is used again.

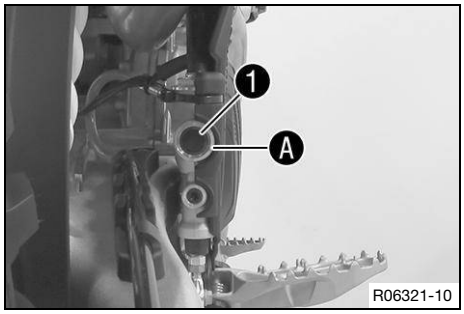

– Stand the vehicle upright.
– Check the brake fluid level in sight glass ❶.
» If the brake fluid level has fallen below marking Ⓐ:
– Add brake fluid for the rear brake. (p. 113)

13.11 Adding brake fluid for the rear brake

WARNING

Danger of accidents Brake fluid which is too old or of the wrong type impairs the function of the brake system.

- Make sure that brake fluid for the front and rear brake is changed in accordance with the service schedule.
- Make sure that only clean, approved brake fluid from a tightly sealed container is used.

WARNING

Danger of accidents An insufficient brake fluid level will cause the brake system to fail.

If the brake fluid level drops below the specified marking or the specified value, the brake system has a leak or the brake pads are worn down.

- Have the brake system checked and make sure that the problem has been eliminated before the vehicle is used again.

WARNING

Health hazard Brake fluid is a harmful substance.

- Keep brake fluid out of the reach of children.
- Wear suitable protective clothing and safety glasses.
- Do not allow brake fluid to come into contact with the skin, the eyes, or clothing.
- Consult a doctor immediately if brake fluid has been ingested.
- Rinse the affected area with plenty of water in the event of contact with the skin.
- Rinse eyes thoroughly with water immediately and consult a doctor if brake fluid comes into contact with the eyes.
- If brake fluid spills on to your clothing, change the clothing.

NOTE

Environmental hazard Hazardous substances cause environmental damage.

- Dispose of oils, grease, filters, fuel, cleaning agents, brake fluid, etc. correctly and in accordance with the applicable regulations.

Note

Avoid contact between brake fluid and painted parts. Brake fluid corrodes paint.

Preparatory work

- Check that the brake pads of the rear brake are secured. (p. 114)
- Remove air filter box cover. (p. 84)
- Remove the seat. (p. 83)
- Remove the right side fairing. (p. 86)
- Remove the frame protector. (p. 70)

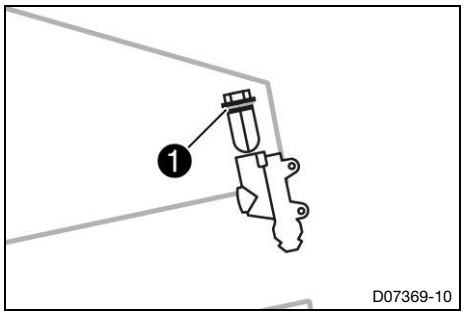

Main work

– Stand the vehicle upright.
– Remove screw cap 1 with the membrane and the O-ring.

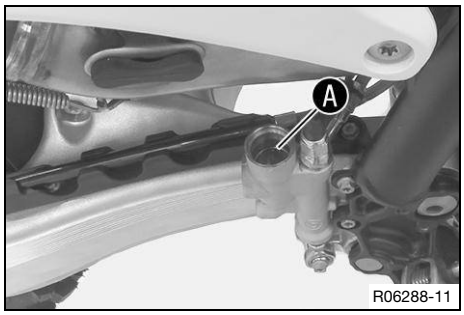

– Add brake fluid to mark A.

Brake fluid DOT 5.1 (p. 178)

– Mount and tighten the screw cap with the membrane and O-ring.

Immediately clean up any brake fluid that has overflowed or spilled using water.

Reworking

– Install the frame protector. (p. 71)
– Install the right side cover. (p. 87)
– Mount the seat. (p. 83)
– Install the air filter box cover. (p. 84)

13.12 Checking that the brake pads of the rear brake are secured

WARNING
Danger of accidents Worn brake pads reduce the brake action.
– Make sure that worn brake pads are replaced immediately.

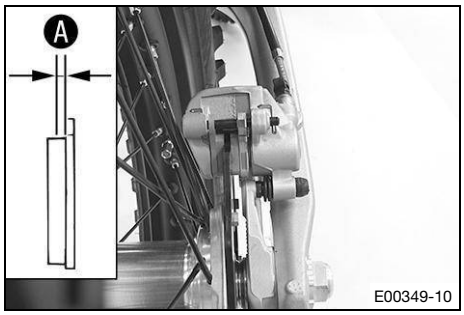

– Check all brake pads on both brake calipers for their lining thickness A.

Minimum pad thickness A	≥ 1 mm (≥ 0.04 in)

» If it is less than the minimum thickness:
  – Change the rear brake pads. (p. 115)
– Check the brake linings for damage and cracking.
» If there is damage or cracking:
  – Change the rear brake pads. (p. 115)
– Check that the brake pads are secured.
» If the brake pads are not secured correctly:
  – Secure brake pads, replace with new parts if necessary.

13.13 Changing the rear brake pads

WARNING
Danger of accidents Brake pads which have not been approved alter the braking action.
– Only use brake pads approved and recommended by the vehicle manufacturer.

WARNING
Danger of accidents Incorrect servicing will cause the brake system to fail.
– Ensure that service work and repairs are performed professionally.

WARNING
Danger of accidents Brake fluid which is too old or of the wrong type impairs the function of the brake system.
– Make sure that brake fluid for the front and rear brake is changed in accordance with the service schedule.
– Make sure that only clean, approved brake fluid from a tightly sealed container is used.

WARNING
Danger of accidents Oil, grease or wax on the brake discs reduces the brake action.
– Always keep the brake discs free of oil, fat and wax.
– Clean the brake discs with brake cleaner when necessary.

WARNING
Health hazard Brake fluid is a harmful substance.
– Keep brake fluid out of the reach of children.
– Wear suitable protective clothing and safety glasses.
– Do not allow brake fluid to come into contact with the skin, the eyes, or clothing.
– Consult a doctor immediately if brake fluid has been ingested.
– Rinse the affected area with plenty of water in the event of contact with the skin.
– Rinse eyes thoroughly with water immediately and consult a doctor if brake fluid comes into contact with the eyes.
– If brake fluid spills on to your clothing, change the clothing.

NOTE
Environmental hazard Hazardous substances cause environmental damage.
– Dispose of oils, grease, filters, fuel, cleaning agents, brake fluid, etc. correctly and in accordance with the applicable regulations.

Note
Avoid contact between brake fluid and painted parts. Brake fluid corrodes paint.

Preparatory work
– Remove air filter box cover. (p. 84)
– Remove the seat. (p. 83)
– Remove the right side fairing. (p. 86)
– Remove the frame protector. (p. 70)

Main work

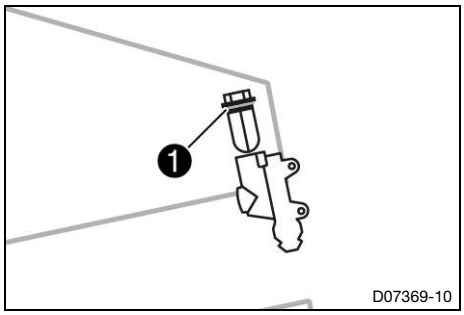

- Stand the vehicle upright.
- Remove screw cap ❶ with the membrane and the O-ring.
- Press the brake piston back to its basic position and make sure that no brake fluid overflows from the brake reservoir, extract some brake fluid if necessary.

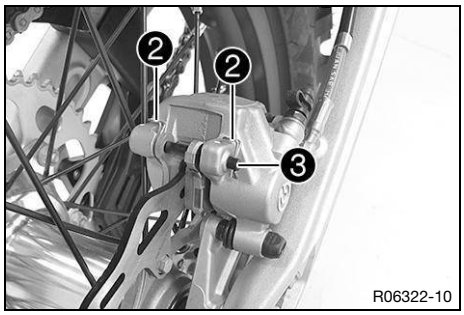

- Remove cotter pin ❷, pull out pin ❸, and remove the brake linings.
- Clean brake caliper and brake caliper support.

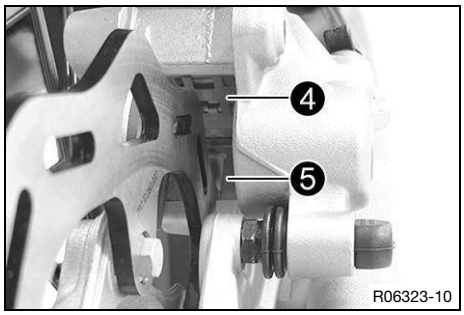

- Check that spring steel clip ❹ in the brake caliper and brake pad guide plate ❺ in the brake caliper support are properly seated.
  - ✓ The arrow on the spring steel clip points in the rotation direction of the brake disc.

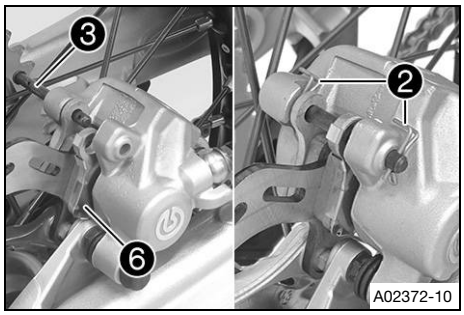

- Insert the new brake pads, mount stud ❸ and cotter pins ❷.

Always replace brake pads in sets.
Make sure that decoupling plate ❻ is mounted on the piston side of the brake pad.

- Actuate the brake disc repeatedly until the brake pads are in contact with the brake disc and a pressure point is achieved.

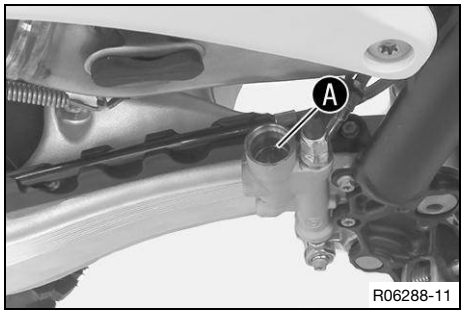

- Correct the brake fluid level to mark Ⓐ.

Brake fluid DOT 5.1 (p. 178)

- Mount and tighten screw cap ❶ with the membrane and O-ring.

Immediately clean up any brake fluid that has overflowed or spilled using water.

Reworking

– Install the frame protector. (p. 71)
– Install the right side cover. (p. 87)
– Mount the seat. (p. 83)
– Install the air filter box cover. (p. 84)

14.1 Removing the front wheel

Preparatory work

– Raise the motorcycle with a lift stand. (p. 68)

Main work

– Manually press the brake caliper toward the brake disc to push back the brake pistons.

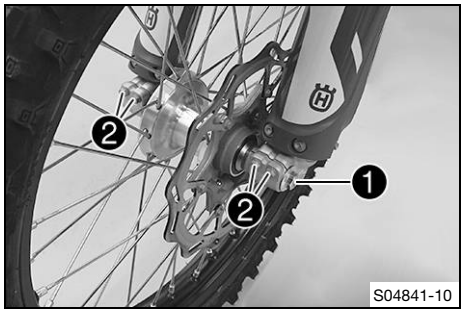

– Loosen screw ❶ by four turns.
– Loosen screws ❷.
– Press on screw ❶ to push the wheel spindle out of the fork shoe.
– Remove screw ❶.

WARNING

Danger of accidents Damaged brake discs reduce the braking action.

– Always lay the wheel down in such a way that the brake disc is not damaged.

– Hold front wheel and remove wheel spindle. Take the front wheel out of the fork.

> Do not actuate the hand brake lever when the front wheel is removed.

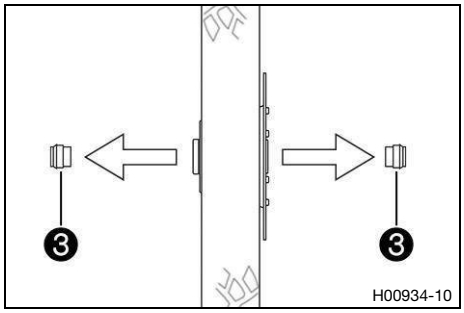

– Remove spacers ❸.

14.2 Installing the front wheel

WARNING

Danger of accidents Oil, grease or wax on the brake discs reduces the brake action.

- Always keep the brake discs free of oil, fat and wax.
- Clean the brake discs with brake cleaner when necessary.

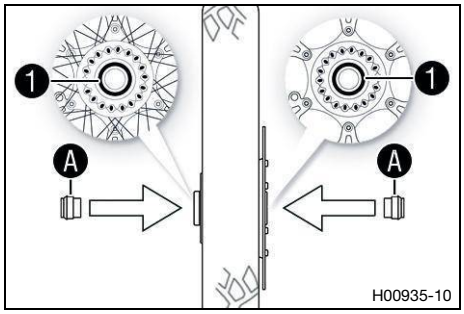

- Check the wheel bearing for damage and wear.
  - » If the wheel bearing is damaged or worn:
    - Change the front wheel bearing.
- Clean and grease radial shaft seal ❶ and contact surfaces Ⓐ on the spacers.

Long-life grease (p. 177)

- Insert spacers.
- Clean and lightly grease the wheel spindle.

Long-life grease (p. 177)

- Position the front wheel and insert the wheel spindle.
  - ✓ The brake pads are positioned correctly.

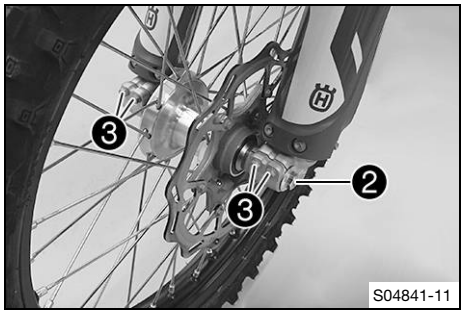

- Mount and tighten screw ❷.

Screw, wheel spindle, front	
M20×1.5	35 Nm (25.8 ft·lb$_f$)

- Operate the hand brake lever several times until the brake pads are in contact with the brake disc.
- Remove the motorcycle from the lift stand. (p. 68)
- Operate the front brake and compress the fork a few times firmly.
  - ✓ The fork legs straighten.
- Tighten screws ❸.

Screw, fork shoe	
M8	15 Nm (11.1 ft·lb$_f$)

14.3 Removing the rear wheel

Preparatory work

- Raise the motorcycle with a lift stand. (p. 68)

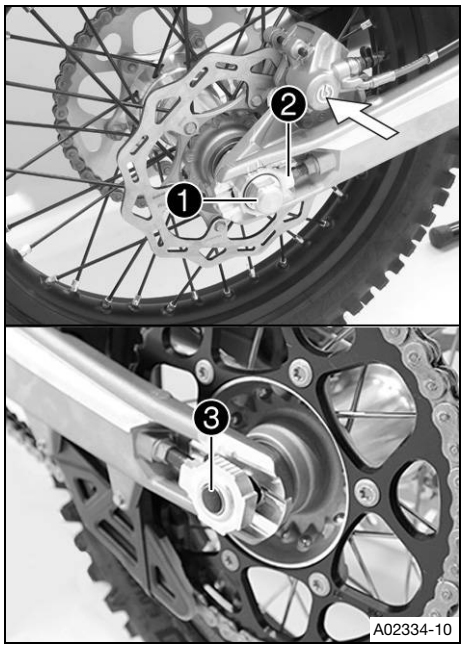

Main work

- Manually press the brake caliper toward the brake disc to push back the brake pistons.
- Remove nut ❶.
- Remove chain tension adjuster ❷.
- Pull out wheel spindle ❸ far enough to allow the rear wheel to be pushed forward.
- Push the rear wheel forward as far as possible. Remove the chain from the rear sprocket.

Protect the components against damage by covering them.

WARNING

Danger of accidents Damaged brake discs reduce the braking action.

- Always lay the wheel down in such a way that the brake disc is not damaged.

- Hold the rear wheel and remove wheel spindle. Take the rear wheel out of the swingarm.

Do not actuate the brake pedal when the rear wheel is removed.

- Remove spacers ❹.

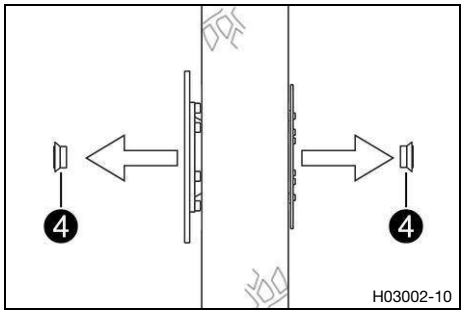

14.4 Installing the rear wheel

WARNING

Danger of accidents Oil, grease or wax on the brake discs reduces the brake action.

- Always keep the brake discs free of oil, fat and wax.
- Clean the brake discs with brake cleaner when necessary.

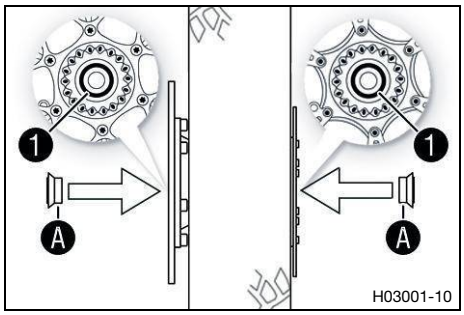

Main work

- Check the wheel bearing for damage and wear.
  - » If the wheel bearing is damaged or worn:
    - Change the rear wheel bearing.
- Clean and grease radial shaft seal ❶ and contact surfaces Ⓐ on the spacers.

Long-life grease (p. 177)

- Insert spacers.

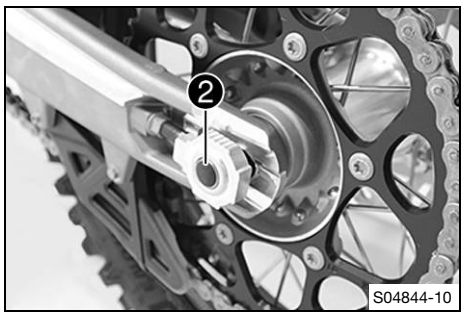

– Clean and lightly grease the wheel spindle.

Long-life grease (p. 177)

– Position the rear wheel and insert wheel spindle ❷.
  ✓ The brake pads are positioned correctly.
– Attach the chain.

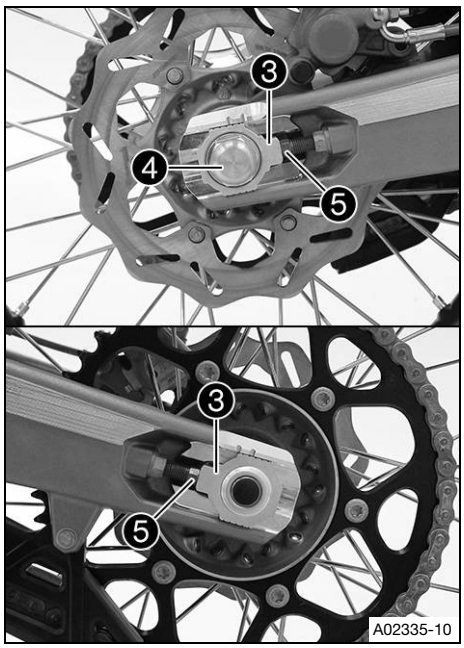

– Position chain tension adjuster ❸.
– Mount nut ❹ but do not tighten yet.
– Make sure that chain tension adjusters ❸ are fitted correctly on adjusting screws ❺.
– Check the chain tension. (p. 95)
– Tighten nut ❹.

Nut, wheel spindle, rear	
M22	80 Nm (59.0 ft·lb$_f$)

Note
The wide adjustment range of the chain adjusters enables different secondary ratios with the same chain length.
Chain tension adjusters ❸ can be turned by 180°.

– Actuate the brake disc repeatedly until the brake pads are in contact with the brake disc and a pressure point is achieved.

Reworking
– Remove the motorcycle from the lift stand. (p. 68)

14.5 Checking the tire condition

Note
Only mount tires approved and/or recommended by Husqvarna Mobility.
Other tires could have a negative effect on handling characteristics.
The type, condition, and pressure of the tires all have a major impact on the handling of the motorcycle.
The tires mounted on the front and rear wheels must have a similar profile.
Worn tires have a negative effect on handling characteristics, especially on wet surfaces.

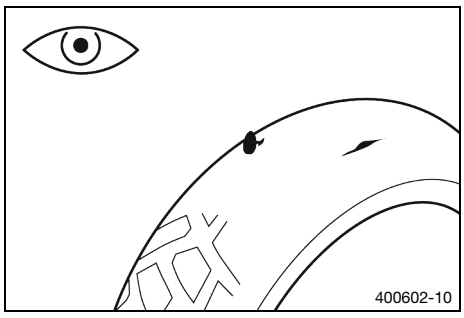

– Check the front and rear tires for cuts, embedded objects, and other damage.
  » If the tires have cuts, run-in objects, or other damage:
    – Change the tires.
– Check the tread depth.

Minimum tread depth	≥ 2 mm (≥ 0.08 in)

Note
Observe the minimum tread depth required by national law.

» If the tread depth is less than the minimum tread depth:
  – Change the tires.

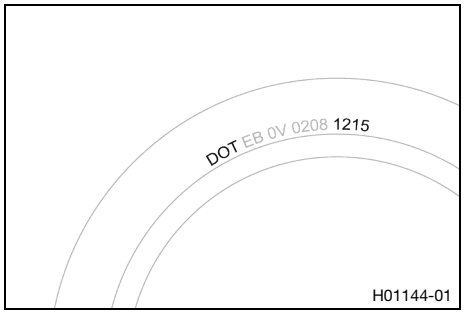

– Check the tire age.

Note
The tire date of manufacture is usually contained in the tire label and is indicated by the last four digits of the **DOT** number. The first two digits indicate the week of manufacture and the last two digits the year of manufacture.
Husqvarna Mobility recommends changing the tires, regardless of the actual wear, after 5 years at the latest.

» If the tires are older than five years:
  – Change the tires.

14.6 Checking the tire pressure

Note
Low tire pressure leads to abnormal wear and the tire overheating.
Correct tire pressure ensures optimal riding comfort and maximum tire service life.

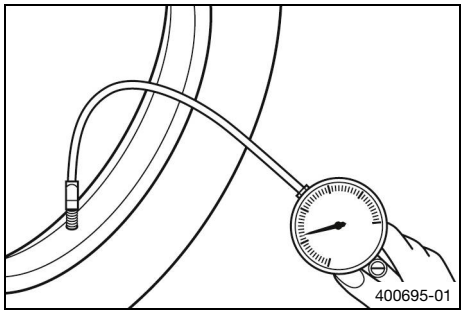

– Remove the protection cap.
– Check the tire pressure when the tires are cold.

Off-road tire pressure	
front	1.0 bar (14.5 psi)
rear	1.0 bar (14.5 psi)

Street tire pressure	
front	2.0 bar (29.0 psi)
rear	2.0 bar (29.0 psi)

» If the tire pressure does not meet specifications:
  – Correct the tire air pressure.
– Mount the protection cap.

14.7 Checking the spoke tension

WARNING

Danger of accidents Incorrectly tensioned spokes impair the handling characteristic and can result in secondary damage.

If the spokes are too tight, they can break due to being overloaded.

Loose spokes can cause lateral or radial run-out in the wheel and other spokes will loosen as a result.

– Check the spoke tension regularly, especially on a new vehicle.

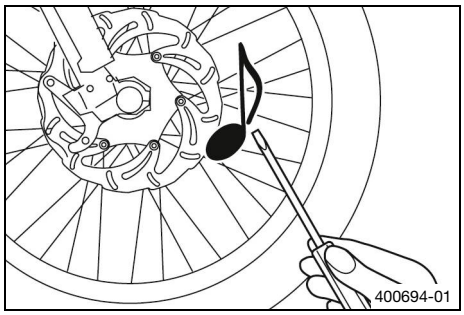

– Briefly tap each spoke with a screwdriver.

You should hear a high-pitched sound.

Note

The frequency of the sound depends on the spoke length and spoke diameter.

If you hear different pitches on different spokes of equal length and diameter, this is an indication of different spoke tensions.

» If the spoke tension differs:

– Correct the spoke tension.

– Check the spoke torque.

Spoke nipple, front wheel	
M4,5	6 Nm (4.4 ft·lb$_f$)
Spoke nipple, rear wheel	
M4,5	6 Nm (4.4 ft·lb$_f$)

Torque wrench kit (58429094000)

15.1 Removing the 12 V battery

WARNING

Risk of injury 12-V batteries contain harmful substances.

- Keep 12-V batteries out of the reach of children.
- Keep the battery away from sparks or open flames.
- Only charge batteries in well-ventilated rooms.
- Maintain a minimum distance from flammable materials when charging 12-V batteries.

Minimum distance	1 m (3 ft – 3 in)

- Do not charge deeply discharged 12- V batteries if the charge is already below the minimum voltage.

Minimum voltage before starting charging	9 V

- Dispose of 12 V batteries correctly if they have less than the minimum voltage.

NOTE

Environmental hazard 12-V batteries contain environmentally-hazardous materials.

- Do not dispose of 12-V batteries as household waste.
- Dispose of 12-V batteries at a collection point for used batteries.

NOTE

Environmental hazard Hazardous substances cause environmental damage.

- Dispose of oils, grease, filters, fuel, cleaning agents, brake fluid, etc. correctly and in accordance with the applicable regulations.

Preparatory work

- Remove the seat. (p. 83)

Main work

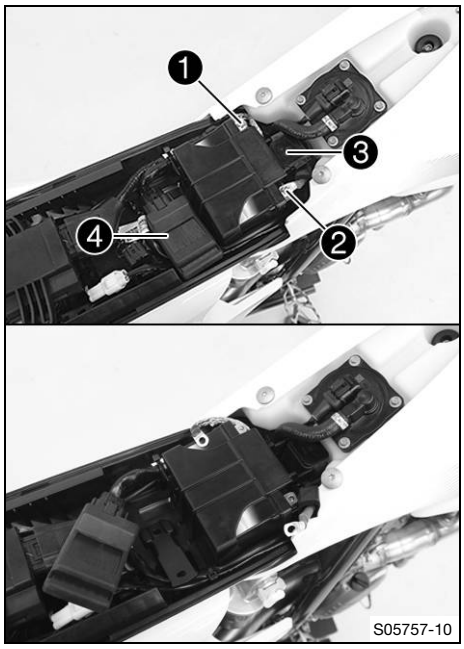

- Disconnect negative cable ❶ from the 12 V battery.
- Pull back positive terminal cover and disconnect positive cable ❷ from the 12-V battery.
- Pull off starter relay ❸ and OCU ❹ and hang to the side.

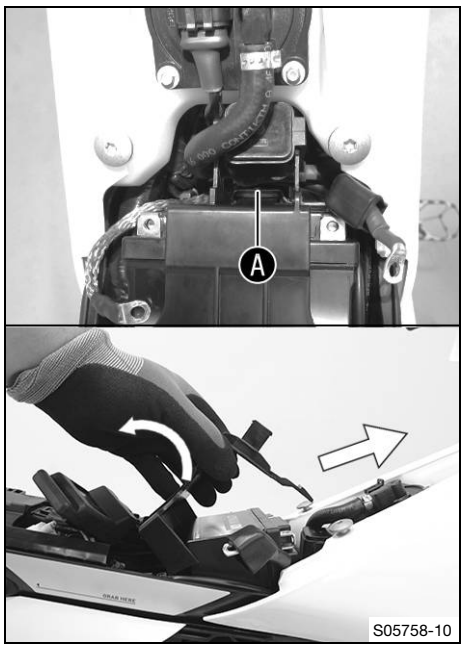

– Open battery holding bracket in area A and pull upward.
– Take out the 12 V battery to the front.

15.2 Installing the 12 V battery

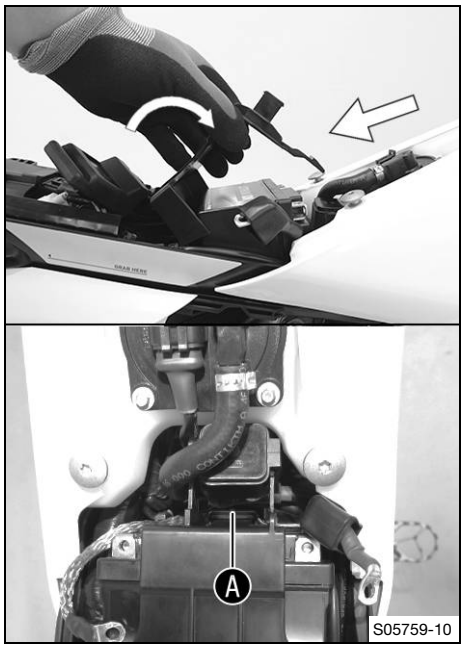

Main work

– Insert the 12 V battery into the battery compartment with the terminals facing forward and secure with holding bracket.

Ensure that the cable is routed correctly.

12-V battery (HJTZ5S-FP-C)

– Attach the battery holding bracket in area A and allow to engage.

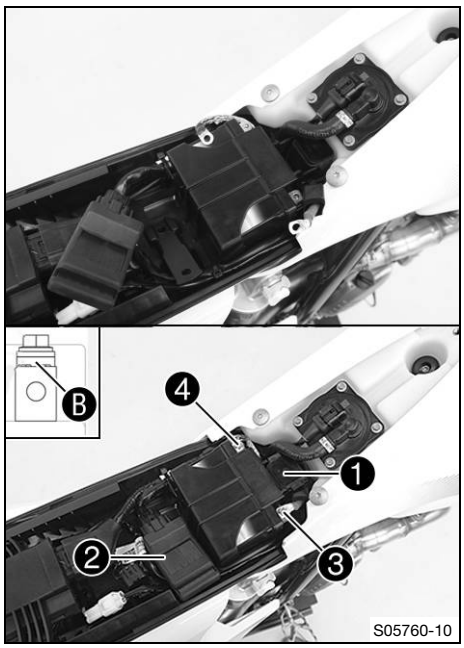

– Attach starter relay ❶ and OCU ❷ to the holding bracket.
– Connect positive cable ❸ to the 12-V battery.

Screw, battery terminal	
M5	2.5 Nm (1.84 ft·lb$_f$)

Contact disks Ⓑ must be mounted under the screws and the cable lug with the claws toward the battery terminal.

– Connect negative cable ❹ to the 12 V battery.

Screw, battery terminal	
M5	2.5 Nm (1.84 ft·lb$_f$)

Contact disks Ⓑ must be mounted under the screws and the cable lug with the claws toward the battery terminal.

– Slide the positive terminal cover over the positive terminal.

Reworking

– Mount the seat. (p. 83)

15.3 Charging the 12 V battery

WARNING

Risk of injury 12-V batteries contain harmful substances.

– Keep 12-V batteries out of the reach of children.
– Keep the battery away from sparks or open flames.
– Only charge batteries in well-ventilated rooms.
– Maintain a minimum distance from flammable materials when charging 12-V batteries.

Minimum distance	1 m (3 ft – 3 in)

– Do not charge deeply discharged 12- V batteries if the charge is already below the minimum voltage.

Minimum voltage before starting charging	9 V

– Dispose of 12 V batteries correctly if they have less than the minimum voltage.

NOTE

Environmental hazard 12-V batteries contain environmentally-hazardous materials.

– Do not dispose of 12-V batteries as household waste.
– Dispose of 12-V batteries at a collection point for used batteries.

NOTE

Environmental hazard Hazardous substances cause environmental damage.

– Dispose of oils, grease, filters, fuel, cleaning agents, brake fluid, etc. correctly and in accordance with the applicable regulations.

Note

Even when there is no load on the 12 V battery, it discharges steadily each day.
The state of charge and the method of charging are very important for the service life of the 12 V battery.
Rapid recharging with a high charging current shortens the service life of the battery.
If the charging current, charging voltage, or charging time is exceeded, the 12 V battery will be destroyed.
If the 12 V battery is left in a discharged state for an extended period, it will become deeply discharged and suffer a loss of capacity, destroying the battery.
The 12 V battery is maintenance-free.

Preparatory work

– Remove the seat. (p. 83)
– Remove the 12 V battery. (p. 124)

Main work

– Do not remove cover 1.
– Check the battery voltage.

» Battery voltage:
  - < 9 V
  – Do not charge the 12 V battery.
  – Replace the 12 V battery and dispose of the old 12 V battery properly.

» If the specifications have been met:
  Battery voltage:
  - ≥ 9 V
  – Connect a charger to the 12 V battery. Switch the charger on.

Read the accompanying instructions.	
Maximum charging voltage	14.4 V
Minimum charging voltage	3.0 A
Maximum charging time	12 h
The charging current, charging voltage, and charging time must not be exceeded.	
Recharge the 12 V battery regularly when the motorcycle is not being used.	3 months
If the 12 V battery is depleted from starting the vehicle repeatedly, the battery must be charged immediately.	
Ideal charging and storage temperature of the lithium-ion battery	10 °C … 20 °C (50.0 °F … 68.0 °F)

Battery charger (79629974000)
(US) battery charger (79629974500)

Note

This battery charger tests whether the 12 V battery retains its voltage. It is also impossible to overcharge the 12 V battery with this battery charger. The charging time may be longer at low temperatures.

This battery charger is only suitable for lithium iron phosphate batteries.

– Switch off the charger after charging and disconnect from the 12 V battery.

Reworking

– Install the 12 V battery. (p. 125)
– Mount the seat. (p. 83)

15.4 Changing the main fuse

WARNING
Fire hazard Incorrect fuses overload the electrical system.
– Use only fuses with the prescribed amperage.
– Do not bypass or repair fuses.

Note
The main fuse protects all electrical power loads of the vehicle. It is located in the starter relay housing under the seat.

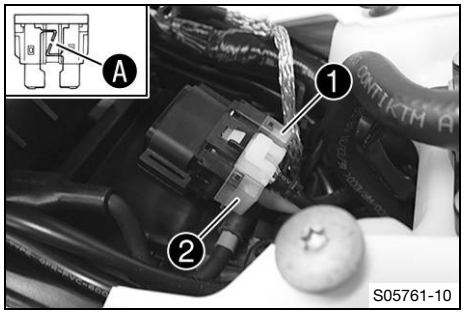

Preparatory work
– Remove the seat. (p. 83)
– Remove the 12 V battery. (p. 124)

Main work
– Take off the protection caps and remove faulty fuse 1.

Note
A faulty fuse has a burned-out fuse wire A.
A spare fuse 2 is located in the starter relay.

– Insert the main fuse.

Fuse (58011109120)

– Check that the electrical equipment is functioning properly.

Tip
Insert a new spare fuse so that it is available if needed.

– Mount the protection caps.
– Mount the starter relay onto the holder and route the cable.

Reworking
– Install the 12 V battery. (p. 125)
– Mount the seat. (p. 83)

15.5 Removing the headlight mask with the headlight

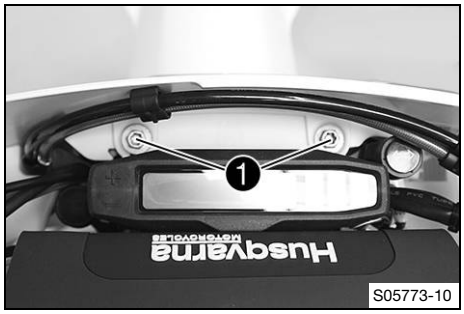

– Release screws 1.
– Slide the headlight mask up and swing it forward.
– Disconnect the brake line at the headlight mask.

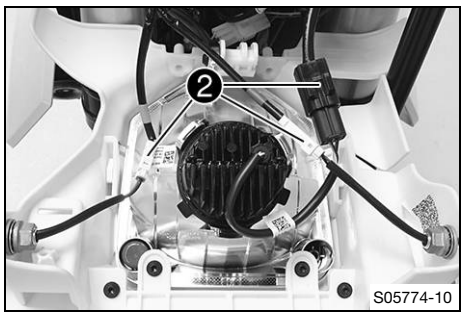

– Detach plug-in connectors ❷ and take off the headlight mask with the headlight.

15.6 Installing the headlight mask with the headlight

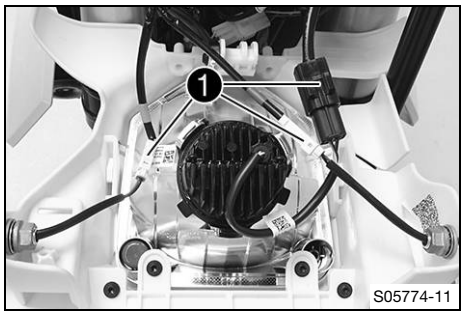

Main work

– Join plug-in connectors ❶.

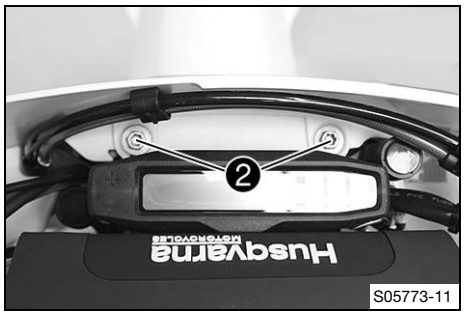

– Position the brake line in the brake line guide.
– Position the headlight mask.
  ✓ The holding lugs engage in the fender.
– Tighten screws ❷.

Remaining screws on chassis	
M6	10 Nm (7.4 ft·lb$_f$)

Reworking

– Check the headlight adjustment. (p. 131)

15.7 Changing the headlight bulb

Preparatory work

– Remove the headlight mask with the headlight. (p. 129)

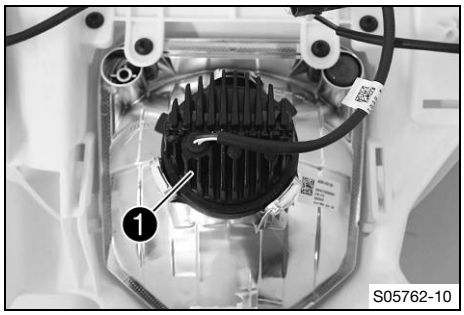

Main work

– Turn LED unit ❶ counterclockwise all the way and take it out of the reflector.

Only touch the LED unit on the cooling element.

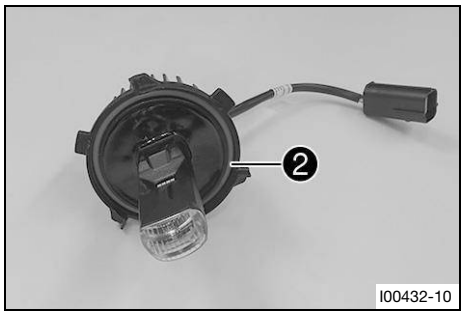

– Insert the LED unit into the reflector and turn it clockwise all the way.

Ensure that O-ring ❷ is seated properly.

Headlight (LED)

Reworking

– Install the headlight mask with the headlight. (p. 130)
– Check the headlight adjustment. (p. 131)

15.8 Checking the headlight setting

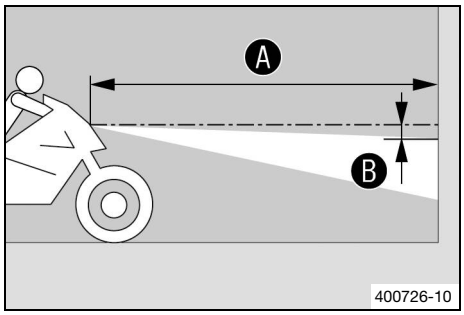

– Park the vehicle on a horizontal surface in front of a light-colored wall and make a mark at the height of the center of the low beam headlight.
– Make another mark at a distance Ⓑ under the first marking.

Distance Ⓑ	5 cm (2.0 in)

– Position the vehicle vertically at a distance Ⓐ away from the wall.

Distance Ⓐ	5 m (16 ft – 5 in)

– Sit on the motorcycle.
– Switch on the low beam.
– Check the headlight adjustment.

The boundary between light and dark must be exactly on the lower mark for a motorcycle with rider.

» If the boundary between light and dark does not meet specifications:
  – Adjust headlight range. (p. 132)

15.9 Adjusting the headlight range

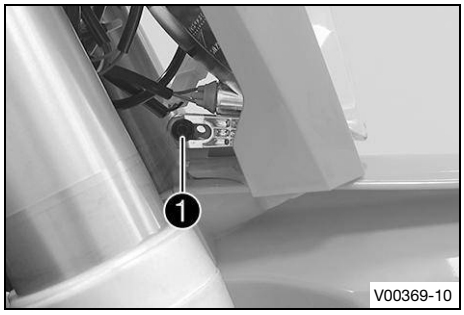

Preparatory work

– Check the headlight adjustment. (p. 131)

Main work

– Loosen screw 1.
– Adjust the headlight range by pivoting the headlight.

The boundary between light and dark must be exactly on the lower mark for a motorcycle with rider (instructions on how to apply the mark: Checking the headlight setting).

Note
A change in weight may require a correction of the headlight range.

– Tighten screw 1.

15.10 Changing the turn signal bulb

NOTE
Impairments to reflectors and lamps Grease on the reflector reduces the emitted light.
Grease on the bulb will evaporate due to the heat and be deposited on the reflector.
Grease residue on the bulb reduces heat dissipation and increases the heat of the bulb, thus reducing its service life.
– Clean and degrease the bulbs before mounting.
– Do not touch the bulbs with your bare hands.

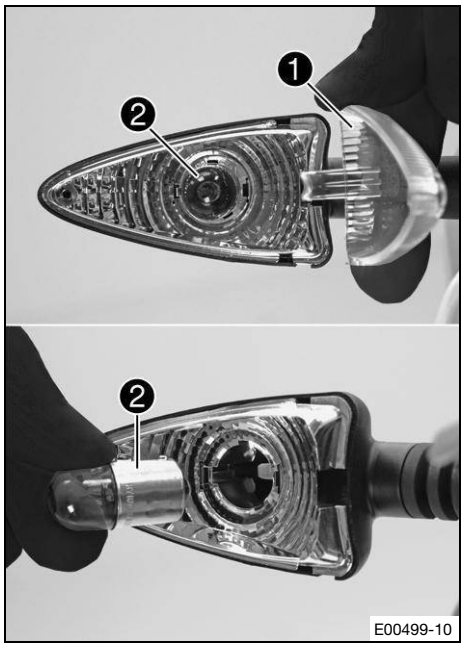

Main work

– Remove the screw and carefully take off turn signal glass 1.
– Press the turn signal bulb 2 carefully into the socket, turn it counterclockwise by about 30°, and pull it out of the socket.

Do not touch the reflector with your fingers and keep it free from grease.

– Press the new turn signal bulb carefully into the socket and turn it clockwise until it stops.

Turn signal (R10W / Sockel BA15s)

– Position the turn signal glass.
– Insert the screw and first turn counterclockwise until it engages in the thread with a small jerk.
– Tighten the screw lightly.

Reworking

– Check that the turn signal system is functioning properly.

15.11 Combination instrument battery, changing

Preparatory work

– Remove the headlight mask with the headlight. (p. 129)

Main work

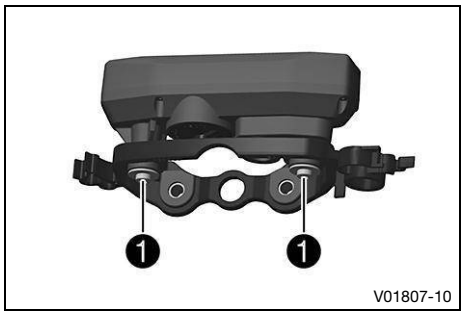

– Remove screws ❶ with the washers.
– Pull the combination instrument upward out of the holder.

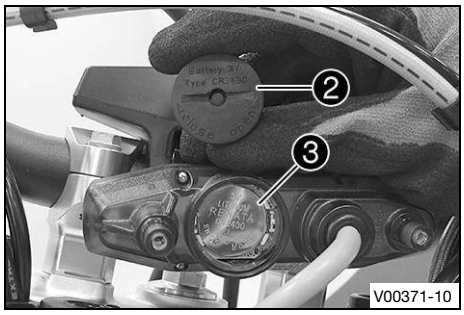

– Using a coin, turn protection cap ❷ all the way counter-clockwise and take it off.
– Remove combination instrument battery ❸.
– Insert the combination instrument with the label facing upward.

Button cell (CR 2430)

– Check the O-ring of the protection cap for correct seating.

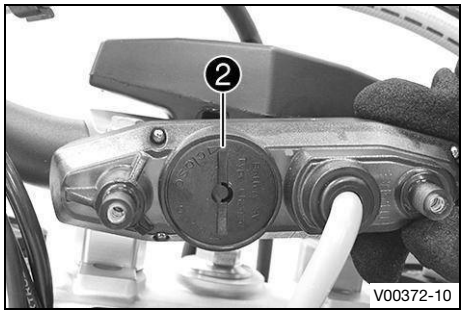

– Position protection cap ❷ and turn all the way clockwise using a coin.
– Press any button on the combination instrument.
  ✓ The combination instrument is activated.
– Position the combination instrument in the holder.
– Mount and tighten the screws with washers.

Reworking

– Install the headlight mask with the headlight. (p. 130)
– Check the headlight adjustment. (p. 131)
– Set the combination instrument.

15.12 Diagnostic connector

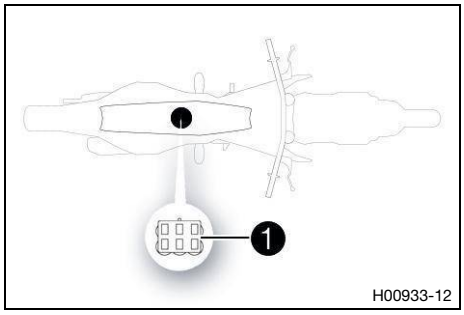

Diagnostics connector ❶ is located under the seat.

15.13 OCU

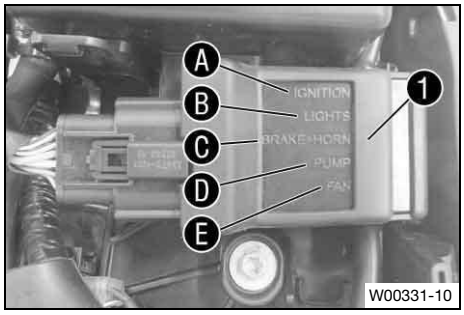

OCU ❶ is located under the seat.

The OCU replaces the electronic fuses and relays.

All outputs are switched independently of the signals of the voltage regulator and ECU.

The outputs are deactivated individually in the event of overcurrent.

This enables easy error detection because the status of each output is indicated via LED lights.

The OCU monitors the electronics system completely independently.

As soon as an indicated error is rectified, the status light of the OCU changes from red to green.

overview

A	Ignition
B	Light
C	Brake light + horn
D	Fuel pump
E	Radiator fan

16.1 Cooling system

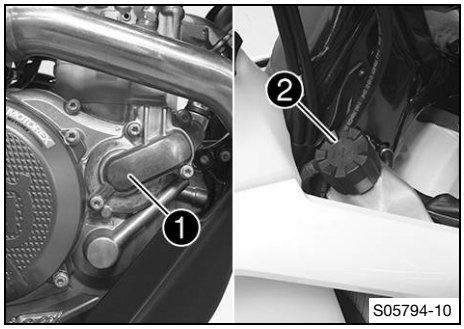

Water pump ❶ in the engine circulates the coolant.
The pressure resulting from the warming of the cooling system is regulated by a valve in radiator cap ❷.
The coolant is cooled by the air stream.
The lower the vehicle speed, the lower the cooling effect. Dirty cooling fins also reduce the cooling effect.
Additional cooling is provided by the radiator fan, which is activated on a temperature-dependent basis.

16.2 Checking the frost protection and coolant level

WARNING
Health hazard Coolant is harmful to health.
- Keep coolant out of the reach of children.
- Do not allow coolant to come into contact with skin, eyes, or clothing.
- Consult a doctor immediately if coolant has been ingested.
- Rinse the affected area immediately with plenty of water in the event of contact with skin.
- Rinse eyes thoroughly with water and consult a doctor immediately if coolant comes into contact with eyes.
- If coolant spills on to your clothing, change the clothing.
- Store coolant properly in a suitable container and keep out of the reach of children.

WARNING
Danger of scalding The coolant heats up and is under high pressure when the vehicle is operated.
- Do not open the radiator, the radiator hoses, or other cooling system components if the engine or the cooling system are at operating temperature.
- Allow the cooling system and the engine to cool down before you open the radiator, the radiator hoses, or other components of the cooling system.
- In the event of scalding, rinse the area affected immediately with lukewarm water.

Condition: The engine is cold

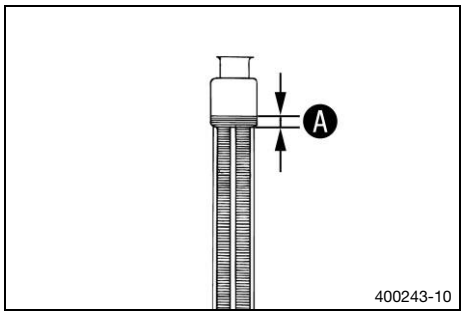

- Stand the motorcycle upright on a level surface.
- Take off the radiator cap.
- Check the frost protection in the coolant.

−45 °C … −25 °C (−49.0 °F … −13.0 °F)

  » If the frost protection in the coolant does not match the specified value:
    - Correct the frost protection in the coolant.
- Check the coolant level in the radiator.

Coolant level Ⓐ above the radiator fins	10 mm (0.39 in)

» If the coolant level does not meet the specifications:
– Correct the coolant level.

coolant	
Coolant (p. 178) Antifreeze protection to at least: −25 °C (−13.0 °F)	0.95 l (0.251 liq. gal_{US})

– Mount the radiator cap.

16.3 Checking the coolant level

WARNING
Health hazard Coolant is harmful to health.
– Keep coolant out of the reach of children.
– Do not allow coolant to come into contact with skin, eyes, or clothing.
– Consult a doctor immediately if coolant has been ingested.
– Rinse the affected area immediately with plenty of water in the event of contact with skin.
– Rinse eyes thoroughly with water and consult a doctor immediately if coolant comes into contact with eyes.
– If coolant spills on to your clothing, change the clothing.
– Store coolant properly in a suitable container and keep out of the reach of children.

WARNING
Danger of scalding The coolant heats up and is under high pressure when the vehicle is operated.
– Do not open the radiator, the radiator hoses, or other cooling system components if the engine or the cooling system are at operating temperature.
– Allow the cooling system and the engine to cool down before you open the radiator, the radiator hoses, or other components of the cooling system.
– In the event of scalding, rinse the area affected immediately with lukewarm water.

Condition: The engine is cold

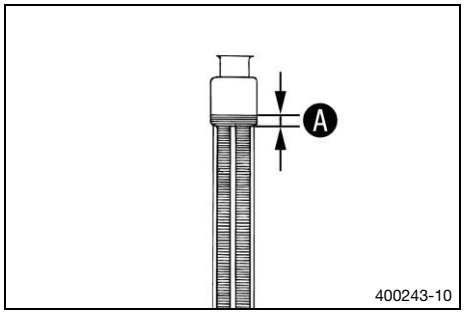

– Stand the motorcycle upright on a level surface.
– Take off the radiator cap.
– Check the coolant level in the radiator.

Coolant level A above the radiator fins	10 mm (0.39 in)

» If the coolant level does not meet the specifications:
– Correct the coolant level.

coolant	
Coolant (p. 178) Antifreeze protection to at least: −25 °C (−13.0 °F)	0.95 l (0.251 liq. gal_{US})

– Mount the radiator cap.

16.4 Draining the coolant

WARNING
Health hazard Coolant is harmful to health.
- Keep coolant out of the reach of children.
- Do not allow coolant to come into contact with skin, eyes, or clothing.
- Consult a doctor immediately if coolant has been ingested.
- Rinse the affected area immediately with plenty of water in the event of contact with skin.
- Rinse eyes thoroughly with water and consult a doctor immediately if coolant comes into contact with eyes.
- If coolant spills on to your clothing, change the clothing.
- Store coolant properly in a suitable container and keep out of the reach of children.

WARNING
Danger of scalding The coolant heats up and is under high pressure when the vehicle is operated.
- Do not open the radiator, the radiator hoses, or other cooling system components if the engine or the cooling system are at operating temperature.
- Allow the cooling system and the engine to cool down before you open the radiator, the radiator hoses, or other components of the cooling system.
- In the event of scalding, rinse the area affected immediately with lukewarm water.

Condition: The engine is cold

Preparatory work
- Remove the skid plate. (p. 103)

Main work
- Stand the motorcycle upright.
- Place an appropriate container under the water pump cover.
- Remove screw ❶.
- Take off radiator cap ❷.
- Completely drain the coolant.
- Mount screw ❶ with the new sealing ring and tighten.

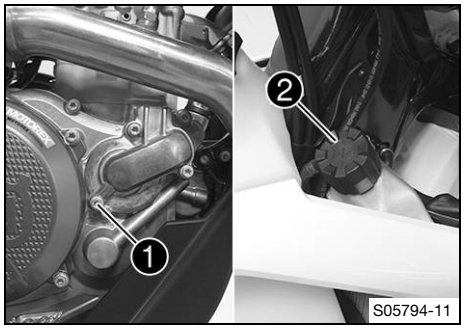

Screw, water pump cover	
M6	10 Nm (7.4 ft·lb$_f$)

16.5 Refilling the coolant

WARNING
Health hazard Coolant is harmful to health.
- Keep coolant out of the reach of children.
- Do not allow coolant to come into contact with skin, eyes, or clothing.
- Consult a doctor immediately if coolant has been ingested.
- Rinse the affected area immediately with plenty of water in the event of contact with skin.
- Rinse eyes thoroughly with water and consult a doctor immediately if coolant comes into contact with eyes.
- If coolant spills on to your clothing, change the clothing.
- Store coolant properly in a suitable container and keep out of the reach of children.

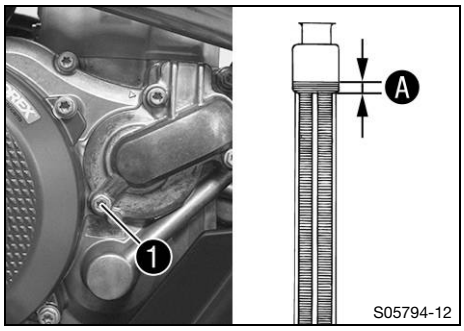

Main work

– Make sure that screw ❶ is tightened.
– Stand the motorcycle upright.
– Pour coolant in up to level Ⓐ above the radiator fins.

10 mm (0.39 in)

coolant	
Coolant (p. 178) Antifreeze protection to at least: −25 °C (−13.0 °F)	0.95 l (0.251 liq. gal_{US})

– Mount the radiator cap.

Reworking

– Install the skid plate. (p. 104)
– Go for a short test ride.
– Check the coolant level. (p. 136)

16.6 Changing the coolant

WARNING

Health hazard Coolant is harmful to health.

– Keep coolant out of the reach of children.
– Do not allow coolant to come into contact with skin, eyes, or clothing.
– Consult a doctor immediately if coolant has been ingested.
– Rinse the affected area immediately with plenty of water in the event of contact with skin.
– Rinse eyes thoroughly with water and consult a doctor immediately if coolant comes into contact with eyes.
– If coolant spills on to your clothing, change the clothing.
– Store coolant properly in a suitable container and keep out of the reach of children.

WARNING

Danger of scalding The coolant heats up and is under high pressure when the vehicle is operated.

– Do not open the radiator, the radiator hoses, or other cooling system components if the engine or the cooling system are at operating temperature.
– Allow the cooling system and the engine to cool down before you open the radiator, the radiator hoses, or other components of the cooling system.
– In the event of scalding, rinse the area affected immediately with lukewarm water.

NOTE

Environmental hazard Hazardous substances cause environmental damage.

– Dispose of oils, grease, filters, fuel, cleaning agents, brake fluid, etc. correctly and in accordance with the applicable regulations.

Condition: The engine is cold

Preparatory work

– Remove the skid plate. (p. 103)

Main work

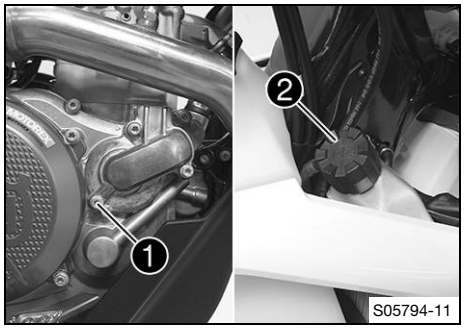

- Stand the motorcycle upright.
- Place an appropriate container under the water pump cover.
- Remove screw ❶.
- Take off radiator cap ❷.
- Completely drain the coolant.
- Mount screw ❶ with the new sealing ring and tighten.

Screw, water pump cover	
M6	10 Nm (7.4 ft·lb$_f$)

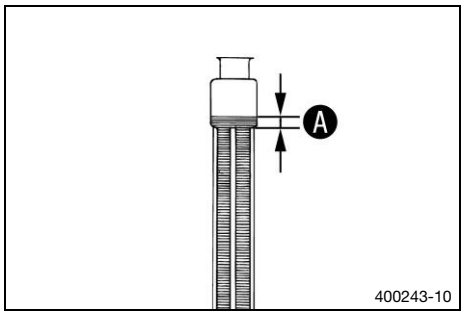

- Pour coolant in up to level Ⓐ above the radiator fins.

Distance Ⓐ above the radiator fins	10 mm (0.39 in)

coolant	
Coolant (p. 178) Antifreeze protection to at least: −25 °C (−13.0 °F)	0.95 l (0.251 liq. gal$_{US}$)

- Mount radiator cap ❷.
- Go for a short test ride.
- Check the coolant level. (p. 136)

Reworking

- Install the skid plate. (p. 104)

17.1 Checking the play in the throttle cable

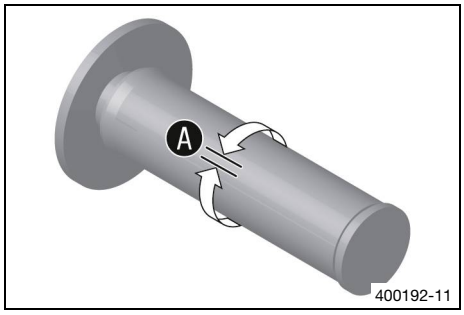

– Check the throttle grip for smooth operation.
– Move the handlebar to the straight-ahead position.
– Turn the throttle twist grip back and forth slightly and determine the play in throttle cable A.

Throttle cable play	3 mm … 5 mm (0.12 in … 0.20 in)

» If the throttle cable play does not meet the specified value:
  – Adjust the throttle cable play. (p. 140)

– Press the cold start button in all the way to the stop.

When the throttle twist grip is turned forward, the cold start button jumps back to the start position.

» If the cold start button does not return to its original position:
  – Adjust the throttle cable play. (p. 140)

DANGER
Danger of poisoning Exhaust gases are toxic and inhaling them may result in unconsciousness and death.
– Always ensure that there is sufficient ventilation when running the engine.
– Use suitable exhaust extraction when starting or running the engine in an enclosed space.

– Start the engine and let it run at idle speed. Move the handlebar back and forth over the entire steering range.

The idle speed must not change.

» If the idle speed changes:
  – Adjust the throttle cable play. (p. 140)

17.2 Adjusting the throttle cable play

Note
If the correct routing of the throttle cables has already been secured, the fuel tank does not need to be removed.

Preparatory work
– Remove the seat. (p. 83)
– Remove the fuel tank. (p. 90)
– Check the throttle cable routing. (p. 99)

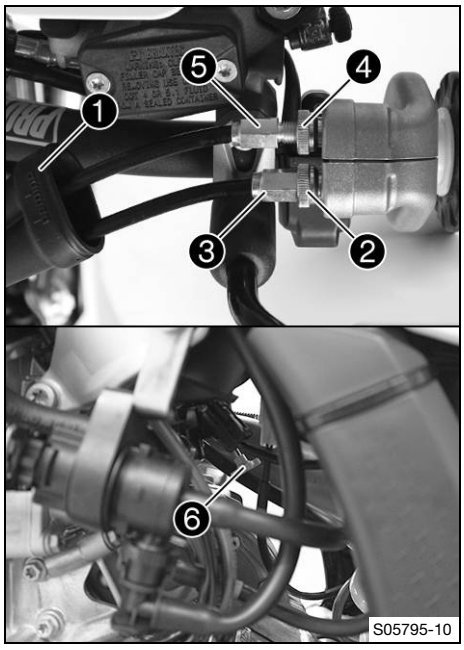

Main work

- Move the handlebar to the straight-ahead position.
- Push back boot ❶.
- Loosen nut ❷.
- Screw adjusting screw ❸ in as far as possible.
- Loosen nut ❹.
- Press cold start button ❻ all the way to the stop.
- Turn adjusting screw ❺ so that the cold start button moves to the basic position when the throttle twist grip is turned forward.
- Tighten nut ❹.
- Turn adjusting screw ❸ so that there is play in the throttle cable at the throttle twist grip.

Throttle cable play	3 mm … 5 mm (0.12 in … 0.20 in)

- Tighten nut ❷.
- Slide on boot ❶.
- Check the throttle grip for smooth operation.

Reworking

- Check the play in the throttle cable. (p. 140)

17.3 Adjusting the characteristic map of the throttle response

Note

On the throttle grip, the characteristic map of the throttle response is changed by changing the guide plate.

A guide plate with a different characteristic map is supplied.

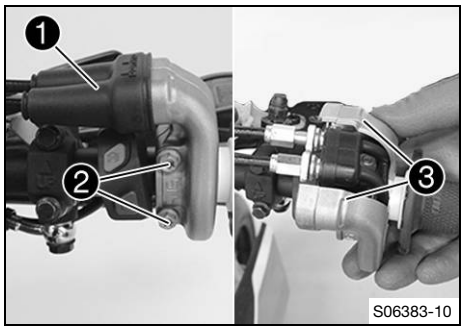

Main work

- Push back sleeve ❶.
- Remove screws ❷ and half-shells ❸.
- Detach the throttle cables and take off the grip tube.

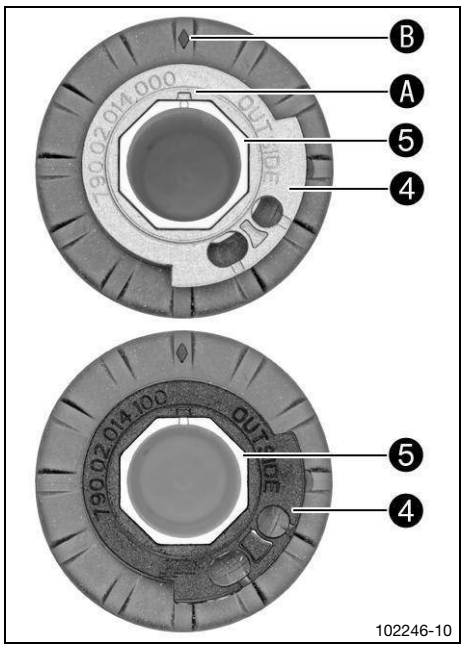

– Remove guide plate ❹ from handle tube ❺.
– Position the required guide plate on the grip tube.

The label **OUTSIDE** must be visible. Marking Ⓐ must be positioned at marking Ⓑ.

Gray guide plate (79002014000)
Work material (Alternative 1 / 1)
Black guide plate (79002014100)

Note

The gray guide plate opens the throttle valve more slowly.

The black guide plate opens the throttle valve more quickly.

The gray guide plate is mounted upon delivery.

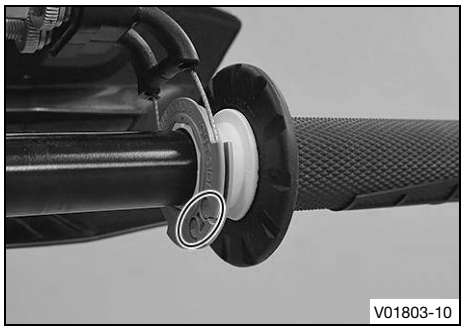

– Clean the outside of the handlebar and the inside of the grip tube. Mount the grip tube on the handlebar.
– Attach the throttle cables to the guide plate and route correctly.

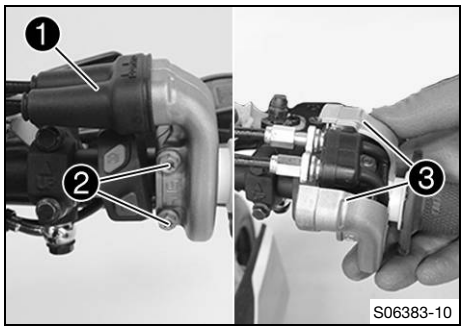

– Position half-shells ❸, mount and tighten screws ❷.

Screw, throttle twist grip	
M6	5 Nm (3.7 ft·lb$_f$)

– Slide on sleeve ❶ and check the throttle grip for ease of movement.

Reworking

– Check the play in the throttle cable. (p. 140)

17.4 Adjusting the idle speed

WARNING
Danger of accidents The engine may suddenly come to a halt if the idle speed is set too low.
– Set the idle speed to the specified value.

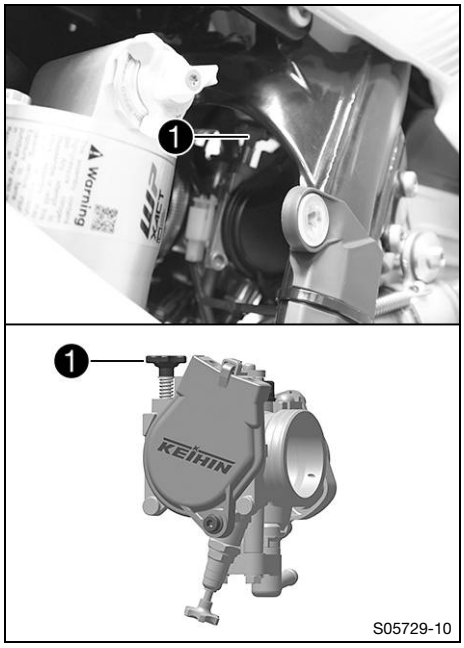

– Run the engine until warm.
✓ The cold start button is in the basic position.

DANGER
Danger of poisoning Exhaust gases are toxic and inhaling them may result in unconsciousness and death.
– Always ensure that there is sufficient ventilation when running the engine.
– Use suitable exhaust extraction when starting or running the engine in an enclosed space.

– Adjust the idle speed by turning idle speed adjusting screw ❶.

Idle speed	1,800 rpm … 1,900 rpm (30.00 Hz … 31.67 Hz)

Service hour counter with revolution counter (A54012920100)

Note
Turning counterclockwise lowers the idle speed.
Turning clockwise increases the idle speed.

17.5 Teaching the throttle valve position

Note
If the control unit detects that the throttle valve position at idle speed needs to be retaught, then the malfunction indicator lamp flashes 2x per second.

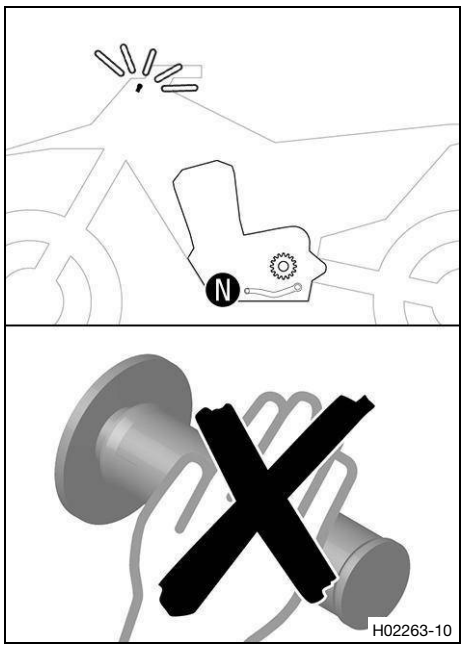

DANGER

Danger of poisoning Exhaust gases are toxic and inhaling them may result in unconsciousness and death.

- Always ensure that there is sufficient ventilation when running the engine.
- Use suitable exhaust extraction when starting or running the engine in an enclosed space.

- Allow the vehicle to run at idle speed.
  ✓ The malfunction indicator lamp stops flashing once teaching is completed.

Note

If the engine becomes too warm, perform a cool-down ride at medium speed.

Then do not switch off the engine after this, but leave it running at idle speed until teaching is completed.

17.6 Checking the basic position of the gear shift lever

Note

When driving, the gear shift lever must not touch the rider's boot when in the basic position.

If the shift lever is permanently touching the boot, the transmission will be subject to excessive load; this can cause a malfunction of the quickshifter.

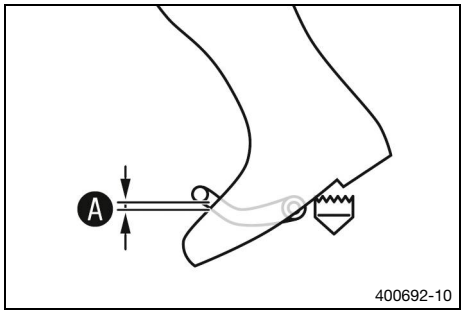

- Sit on the vehicle in the riding position and measure the distance A between the upper edge of your boot and the shift lever.

Distance between the gear shift lever and upper edge of boot	10 mm … 20 mm (0.39 in … 0.79 in)

» If the distance does not meet the specifications:
  - Adjust the basic position of the gear shift lever. (p. 144)

17.7 Adjusting the basic position of the gear shift lever

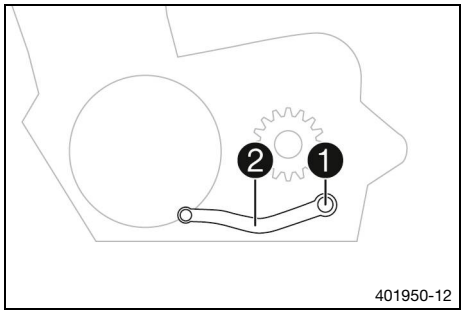

- Remove screw 1 with the washers and take off shift lever 2.

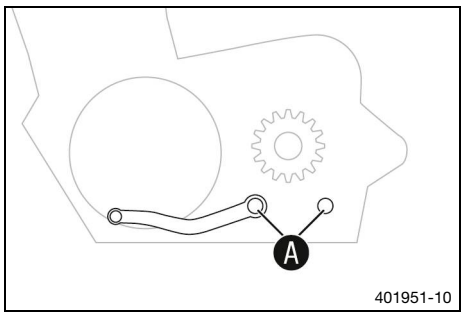

– Clean gear teeth Ⓐ of the shift lever and shift shaft.
– Mount the gear shift lever on the shift shaft in the desired position and engage the toothing.

The gear shift lever must not come into contact with any other vehicle components during the shift procedure.

Note
The range of adjustment is limited.

– Mount and tighten screw ❶ with washers.

Screw, shift lever	
M6×16	14 Nm (10.3 ft·lb$_f$) **Loctite® 243**

18.1 Changing the fuel screen

DANGER

Fire hazard Fuel is highly flammable.

The fuel in the fuel tank expands when warm and can escape if overfilled.

- Do not refuel the vehicle in the vicinity of open flames, glowing, or smoldering objects.
- Make sure that nobody smokes in the vicinity of the vehicle during the refueling process.
- Switch off the engine for refueling.
- Make sure that no fuel is spilled; particularly not on hot parts of the vehicle.
- If any fuel is spilled, wipe it up immediately.
- Do not overfill the fuel tank.

WARNING

Danger of poisoning Fuel is harmful to health.

- Do not allow fuel to come into contact with skin, eyes, or clothing.
- Consult a doctor immediately if fuel has been ingested.
- Do not inhale fuel vapors.
- Rinse the affected area immediately with plenty of water in the event of contact with skin.
- Rinse eyes thoroughly with water and consult a doctor immediately if fuel comes into contact with eyes.
- If fuel spills on to your clothing, change the clothing.
- Store fuel properly in a suitable container and keep out of the reach of children.

NOTE

Environmental hazard Improper handling of fuel is dangerous to the environment.

- Do not allow fuel to enter the groundwater, the soil, or the sewage system.

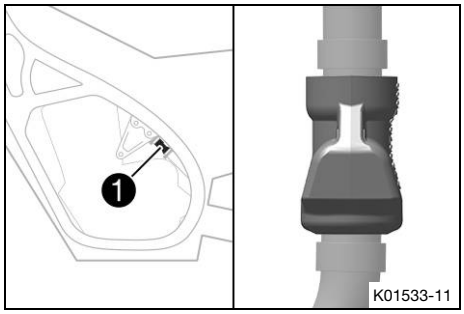

- Remove protection cap ❶ of the fuel line.

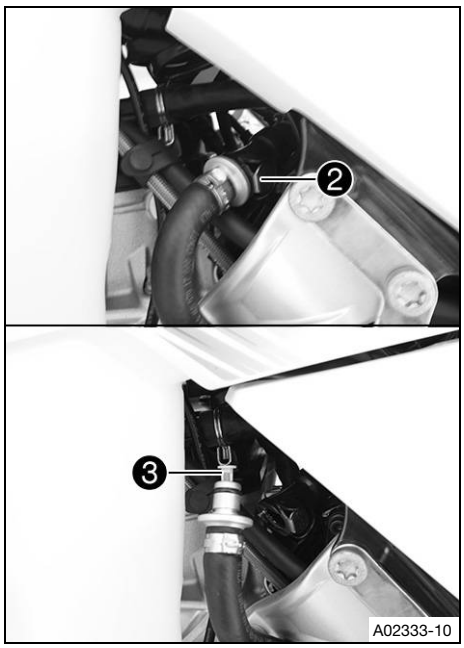

– Clean quick-lock coupling ❷ thoroughly with compressed air.

Dirt must not enter into the fuel line. Dirt in the fuel line clogs the injector!

– Disconnect the quick-lock coupling.

Note
Remaining fuel may flow out of the fuel hose.

– Pull fuel screen ❸ out of the connecting piece.
– Slide the new fuel screen all the way into the connecting piece.
– Spray silicone spray onto a lint-free cleaning cloth and lightly lubricate the O-ring of the quick-lock coupling.

Silicone spray (p. 178)

– Join quick-lock couplings.

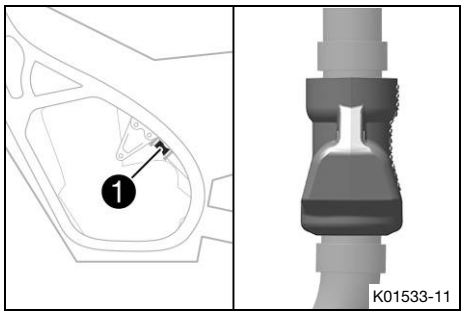

– Mount protection cap ❶ of the fuel line.

DANGER
Danger of poisoning Exhaust gases are toxic and inhaling them may result in unconsciousness and death.
– Always ensure that there is sufficient ventilation when running the engine.
– Use suitable exhaust extraction when starting or running the engine in an enclosed space.

– Start the engine and check the response.

18.2 Checking the engine oil level

Condition: Engine is at operating temperature

Preparatory work
– Stand the motorcycle upright on a level surface.

Main work
– Check the engine oil level.

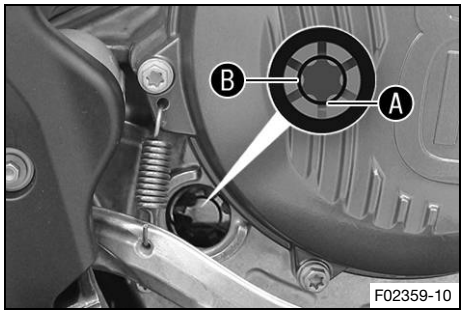

The engine oil is at a level between lower edge Ⓐ and the middle of level viewer Ⓑ.
After switching off the engine, wait one minute before checking the level.

» If the engine oil is not up to lower edge Ⓐ of the level viewer:
– Add engine oil. (p. 150)

18.3 Changing the engine oil and oil filter, cleaning the oil screens

WARNING

Danger of scalding Engine and gear oil heat up when the motorcycle is operated.

– Wear suitable protective clothing and safety gloves.
– In the event of scalding, rinse the area affected immediately with lukewarm water.

NOTE

Environmental hazard Hazardous substances cause environmental damage.

– Dispose of oils, grease, filters, fuel, cleaning agents, brake fluid, etc. correctly and in accordance with the applicable regulations.

Condition: The engine is at operating temperature

Preparatory work

– Remove the skid plate. (p. 103)
– Park the motorcycle on a level surface.

Main work

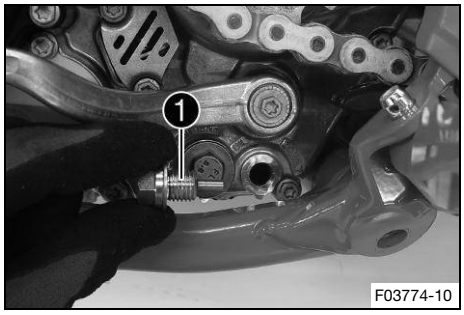

F03774-10

– Position an appropriate container under the engine.
– Remove oil drain plug ❶ with the magnet and seal ring.

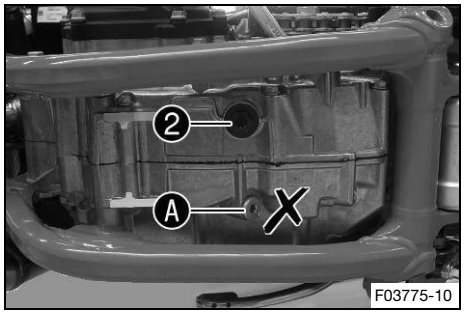

F03775-10

– Remove screw plug ❷ with O-ring.

Do not remove screw Ⓐ.

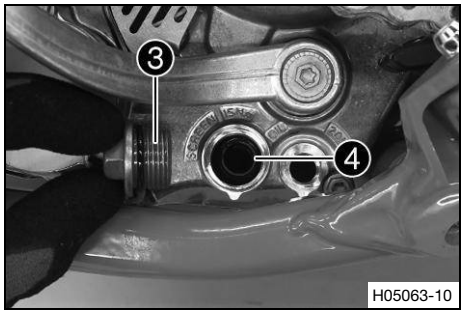

H05063-10

– Remove screw plug ❸ with the long oil screen ❹ and the O-rings.
– Allow the engine oil to drain completely.
– Thoroughly clean the parts and the sealing surfaces.

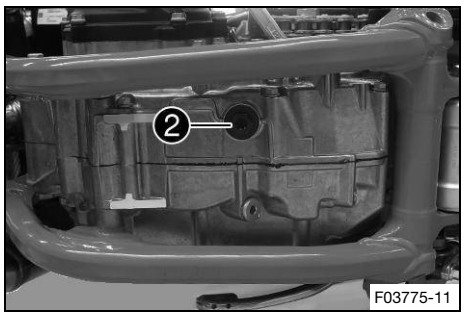

– Mount and tighten screw plug ❷ with new O-ring.

Screw plug, crankcase	
M16×1.5	15 Nm (11.1 ft·lb$_f$)

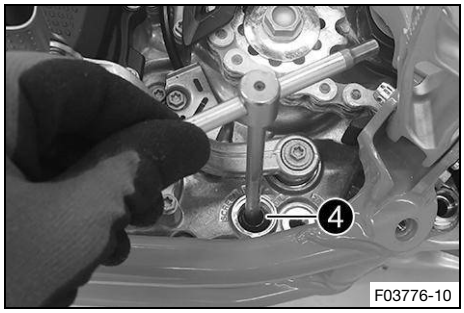

– Position long oil screen ❹ with the O-rings on a pin wrench.
– Position the pin wrench through the drill hole of the screw plug in the opposite section of the engine case.
– Push the oil screen all the way into the engine case.

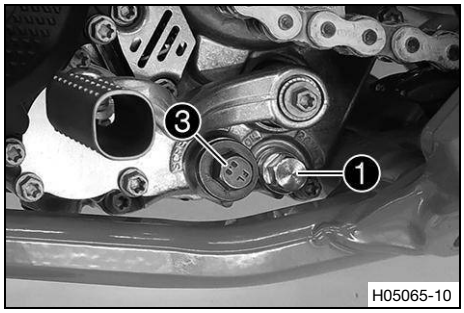

– Mount and tighten screw plug ❸ with O-ring.

Plug, oil screen	
M20×1.5	15 Nm (11.1 ft·lb$_f$)

– Mount and tighten oil drain plug ❶ with the magnet and a new seal ring.

Oil drain plug with magnet	
M12×1.5	20 Nm (14.8 ft·lb$_f$)

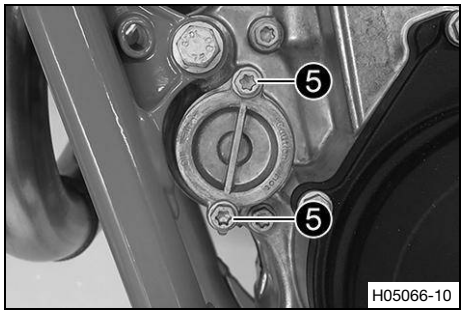

– Remove screws ❺.
– Take off the oil filter cover with the O-ring.

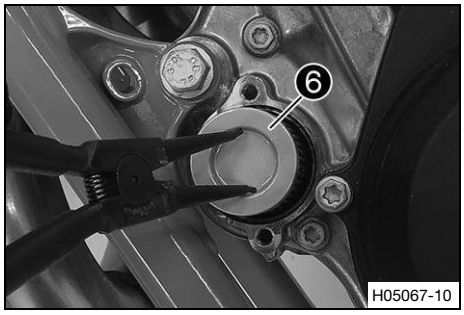

– Pull oil filter ❻ out of the oil filter housing.

Lock ring plier (51012011000)

– Allow the engine oil to drain completely.
– Thoroughly clean the parts and the sealing surface.

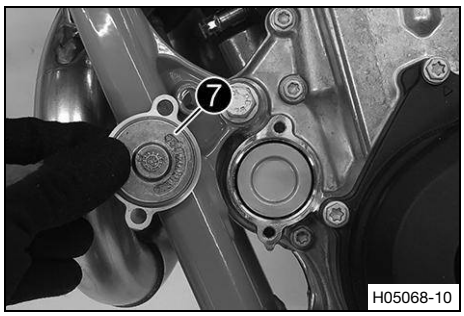

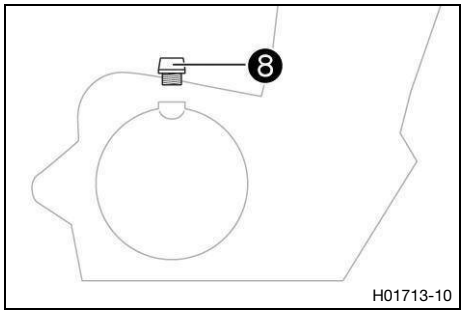

– Lay the motorcycle on its side and fill the oil filter housing to about ⅓ full with engine oil.
– Insert the new oil filter into the oil filter housing.
– Oil the O-ring of the oil filter cover and mount it together with oil filter cover ❼.
– Mount and tighten the screws.

Screw, oil filter cover	
M6×16	10 Nm (7.4 ft·lb$_f$)

– Stand the motorcycle upright.
– Remove filler plug ❽ with the O-ring, and fill up with engine oil.

engine oil	
Engine oil (10W/50) (p. 177) fully synthetic	1.2 l (0.32 liq. gal$_{US}$)

Note
Too little engine oil or poor-quality engine oil will result in premature wear of the engine.

– Mount and tighten the oil plug together with the O-ring.

DANGER
Danger of poisoning Exhaust gases are toxic and inhaling them may result in unconsciousness and death.
– Always ensure that there is sufficient ventilation when running the engine.
– Use suitable exhaust extraction when starting or running the engine in an enclosed space.

– Start the engine and check it for leaks.

Reworking
– Install the skid plate. (p. 104)
– Check the engine oil level. (p. 147)

18.4 Adding engine oil

Note
Too little engine oil or poor-quality engine oil will result in premature wear of the engine.

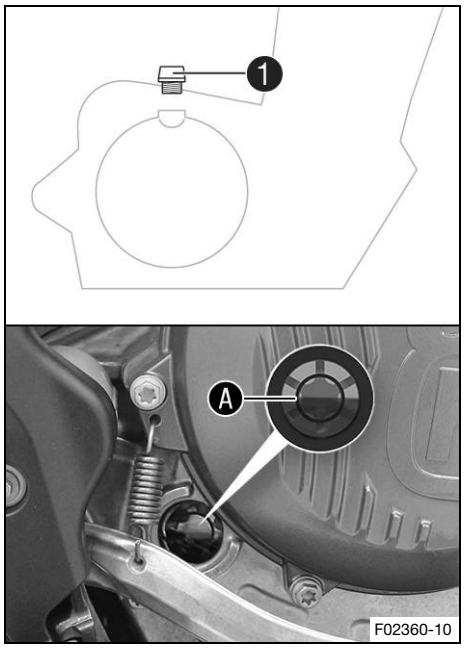

Main work

– Remove oil plug ❶ with O-ring.
– Fill engine oil to the middle Ⓐ of the level viewer.

engine oil	
Engine oil (10W/50) (p. 177) fully synthetic	1.2 l (0.32 liq. gal_{US})

Note
In order to achieve optimal engine oil performance, it is not advisable to mix different engine oils.
Husqvarna Mobility recommends changing the engine oil when necessary.

– Mount and tighten the oil plug together with the O-ring.

DANGER
Danger of poisoning Exhaust gases are toxic and inhaling them may result in unconsciousness and death.
– Always ensure that there is sufficient ventilation when running the engine.
– Use suitable exhaust extraction when starting or running the engine in an enclosed space.

– Start the engine and check it for leaks.

Reworking

– Check the engine oil level. (p. 147)

19.1 Cleaning the motorcycle

NOTE

Material damage Components can be damaged or destroyed if a high-pressure cleaner is used incorrectly.

The high pressure forces water into the electrical components, socket connectors, clutch cables, and bearings, etc.

Too high a pressure can cause malfunctions and destroy components.

– Do not direct the water jet directly on to electrical components, socket connectors, clutch cables, or bearings.
– Maintain a minimum distance between the nozzle of the high-pressure cleaner and the component.

Minimum distance	60 cm (23.6 in)

NOTE

Environmental hazard Hazardous substances cause environmental damage.

– Dispose of oils, grease, filters, fuel, cleaning agents, brake fluid, etc. correctly and in accordance with the applicable regulations.

Note

Clean the motorcycle regularly to maintain its value and appearance over a long period.

Avoid direct sunshine when cleaning the motorcycle.

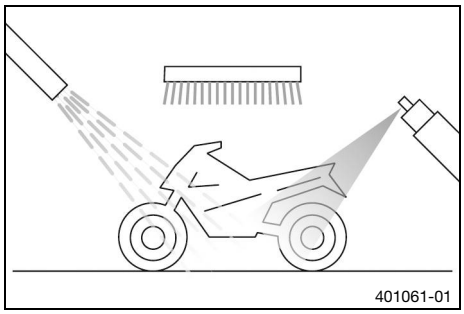

– Close off the exhaust system to keep water from entering.
– Remove the coarse dirt particles with a gentle water jet.
– Spray the heavily soiled parts with a standard commercial motorcycle cleaner and clean using a brush.

Never apply motorcycle cleaner to a dry vehicle; always rinse the vehicle with water first.

Environmentally neutral universal cleaning agent (p. 179)

– After rinsing the motorcycle with a gentle spray of water, allow it to dry thoroughly.
– Remove the cover from the exhaust system.

WARNING

Danger of accidents Moisture and dirt impair the brake system.

– Brake carefully several times to dry out and remove dirt from the brake pads and the brake discs.

– After cleaning, ride the vehicle a short distance until the engine warms up.

Note

The heat produced causes water to evaporate at inaccessible locations in the engine and on the brake system.

– After the motorcycle has cooled off, lubricate all moving parts and pivot points.
– Clean the chain. (p. 94)

WARNING
Danger of accidents Oil, grease or wax on the brake discs reduces the brake action.
– Always keep the brake discs free of oil, fat and wax.
– Clean the brake discs with brake cleaner when necessary.

– Treat bare metal (except for brake discs and the exhaust system) with an anticorrosive.

Preserving materials (p. 179)

– Treat all plastic parts and powder-coated parts with a mild cleaning and care product.

Cleaning agents for plastics, glass, lacquers, metals, windshields and visors (p. 179)

– Lubricate the steering lock.

Universal oil spray (p. 177)

– Grease the ignition switch.

Universal oil spray (p. 177)

19.2 Checks and maintenance steps for winter operation

WARNING
Danger of accidents Moisture and dirt impair the brake system.
– Brake carefully several times to dry out and remove dirt from the brake pads and the brake discs.

WARNING
Danger of accidents Salt on the roads impairs the brake system.
– Brake carefully several times to remove salt from the brake linings and the brake discs.

Note
If you use the vehicle in winter, you must expect salt on the roads. You should therefore take precautions against aggressive road salt.

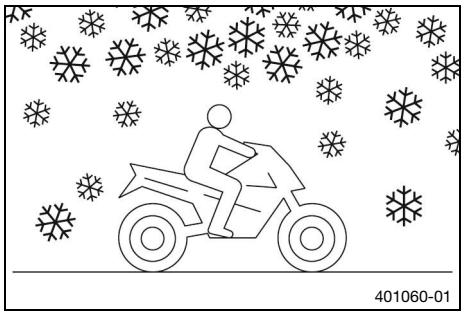

– Clean the motorcycle. (p. 152)
– Clean brake system.

After **EVERY** trip on salted roads, thoroughly clean the brake calipers and brake linings, after they have cooled down and without removing them, with cold water and dry them carefully.
After riding on salted roads, thoroughly clean the vehicle with cold water and dry it well.

Note
Warm water enhances the corrosive effects of salt.

– Treat the engine, swingarm, and all other bare or zinc-plated parts (except the brake discs) with a wax-based anticorrosive.

Corrosion inhibitor must not come in contact with the brake discs as this would greatly reduce the braking force.

– Clean the chain. (p. 94)

20.1 Storage

WARNING

Danger of poisoning Fuel is harmful to health.

- Do not allow fuel to come into contact with skin, eyes, or clothing.
- Consult a doctor immediately if fuel has been ingested.
- Do not inhale fuel vapors.
- Rinse the affected area immediately with plenty of water in the event of contact with skin.
- Rinse eyes thoroughly with water and consult a doctor immediately if fuel comes into contact with eyes.
- If fuel spills on to your clothing, change the clothing.
- Store fuel properly in a suitable container and keep out of the reach of children.

Note

If the vehicle will not be ridden for an extended period, additional steps are recommended.

Before storing the vehicle, check all parts for function and wear. If service, repairs, or replacements are necessary, you should do this during the storage period (less overload of the authorized partner). This allows you to avoid long waiting periods when the next season starts.

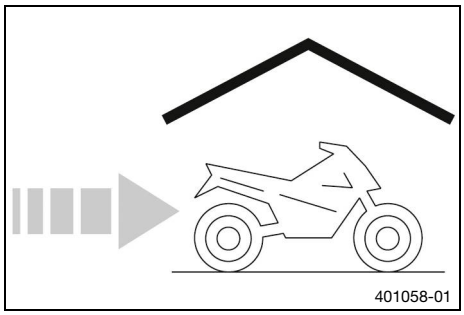

- When refueling for the last time before taking the motorcycle out of service, add fuel additive.

Fuel additive (p. 176)

- Refuel. (p. 53)

Tip

Fill the fuel tank completely as specified, using fuel with the lowest possible ethanol content.

- Clean the motorcycle. (p. 152)
- Change the engine oil and the oil filter, clean the oil screens. (p. 148)
- Check the frost protection and coolant level. (p. 135)
- Check the tire pressure. (p. 122)
- Remove the 12 V battery. (p. 124)
- Charge the 12 V battery. (p. 126)

Ideal charging and storage temperature of the lithium-ion battery	10 °C … 20 °C (50.0 °F … 68.0 °F)

- Store the vehicle in a dry location that is not subject to large fluctuations in temperature.

Note

Husqvarna Mobility recommends picking up the motorcycle.

- Raise the motorcycle with a lift stand. (p. 68)
- Cover the motorcycle with a tarp or cover that is permeable to air.

Do not use non-porous materials because they prevent humidity from escaping and thus cause corrosion.

Note

Avoid running the engine of a motorcycle in storage for a short time only. Since the engine cannot warm up properly, the water vapor produced during combustion condenses and causes valves and the exhaust system to rust.

20.2 Preparing for use after storage

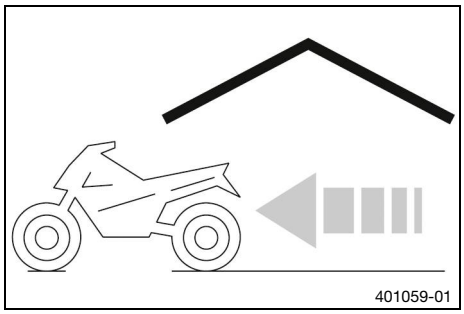

- Remove the motorcycle from the lift stand. (p. 68)
- Install the 12 V battery. (p. 125)
- Perform checks and maintenance measures when preparing for use. (p. 50)
- Take a test ride.

21.1 troubleshooting

Cause	Finding	Remedy
The engine does not turn over (starter motor)	Operating error 12 V battery discharged Main fuse blown Starter relay defective Starter motor defective	– Carry out the starting procedure. (p. 50) – Charge the 12 V battery. (p. 126) – Check the charging voltage. – Check the open-circuit current. – Check the stator winding of the alternator – Change the main fuse. (p. 129) – Check the starter relay. – Check the starter motor.
The engine turns but does not start	Operating error Quick-lock coupling not joined Error in the circuit, OCU LED **A** and **D** lights up. Idle speed is not set correctly Spark plug sooty or wet Plug gap of spark plug too wide Faulty ignition Short-circuit cable in wiring harness frayed, stop button or emergency OFF switch faulty Error in the electronic fuel injection	– Carry out the starting procedure. (p. 50) – Join quick-lock couplings. – Check the electrical system. – Adjust the idle speed. (p. 143) – Clean and dry the spark plug and spark plug connector, or change if necessary. – Adjust plug gap. Plug gap of spark plug: 1.0 mm (0.039 in) – Check the ignition system. – Check the wiring harness. (Visual check). – Check the electrical system. – Read out the fault memory using the diagnostics tool.
Engine does not speed up	Error in the electronic fuel injection Faulty ignition	– Read out the fault memory using the diagnostics tool. – Ignition coil - check the secondary winding. – Check the spark plug connector. – Check the stator winding of the alternator
Engine has too little power	Air filter is very dirty Fuel filter is very dirty Fuel screen is very dirty Error in the electronic fuel injection Exhaust system leaks, deformed or too little damping material in the silencer Valve clearance too little Faulty ignition	– Clean the air filter and air filter box. (p. 85) – Change the fuel filter. – Change the fuel screen. (p. 146) – Read out the fault memory using the diagnostics tool. – Check exhaust system for damage. – Change the damping material on the main silencer. (p. 90) – Adjust the valve clearance.

Cause	Finding	Remedy
		– Ignition coil - check the secondary winding. – Check the spark plug connector. – Check the stator winding of the alternator
The engine dies during the trip	Lack of fuel Error in the circuit, OCU LED **A** and **D** lights up.	– Refuel. (p. 53) – Check the electrical system.
Engine overheats	Too little coolant in cooling system Too little air stream Radiator fins very dirty Foam formation in the cooling system Bent radiator hose Thermostat defective Defect in the radiator fan system, OCU LED **E** lights up.	– Check the transmission and cooling system for leaks. – Check the coolant level. (p. 136) – Switch off the engine when standing. – Clean the radiator fins. – Drain the coolant. (p. 137) – Refill the coolant. (p. 137) – Change the radiator hose. – Check the thermostat. Opening temperature: 70 °C (158.0 °F) – Check the radiator fan. – Check the electrical system.
Malfunction indicator lamp lights up or flashes	Error in the electronic fuel injection	– Stop motorcycle and identify faulty component using the blink code. – Check wiring for damage and electrical plug-in connectors for corrosion and damage. – Read out the fault memory using the diagnostics tool.
High oil consumption	Engine vent hose bent The engine oil level is too high The engine oil is too thin (low viscosity) Piston and cylinder worn	– Route the vent hose without bends or change it if necessary. – Check the engine oil level. (p. 147) – Change the engine oil and the oil filter, clean the oil screens. (p. 148) – Measure the piston/cylinder mounting clearance.
12 V battery discharged	The 12-V battery is not being charged by the alternator unwanted electrical load	– Check the charging voltage. – Check the stator winding of the alternator – Check the open-circuit current.
Values in combination instrument deleted (time, stop watch, lap times)	The combination instrument battery is empty	– Change combination instrument battery. (p. 133)
Fault with the lighting system or horn.	Error in the circuit, OCU LED **B** or **C** lights up.	– Check the electrical system.

22.1 Flash codes

Blink code for malfunction indicator light	Malfunction indicator light lights up
Error level condition	Lambda sensor heater – circuit fault Time: ≥ 3 s Oxygen sensor heater - input signal too high Time: ≥ 0.1 s Oxygen sensor - failure in circuit Time: ≥ 60 s Oxygen sensor - input signal too high Time: ≥ 60 s Fuel vapor valve – input signal too low Fuel vapor valve – input signal too high THREF – internal malfunction of the engine control unit

Blink code for malfunction indicator light	02: Malfunction indicator light flashes 2x short
Error level condition	Crankshaft speed sensor – circuit fault The induction manifold pressure sensor delivers a normal signal (engine running), while the crankshaft speed sensor does not generate any signal at all. Time: ≥ 2.0 s

Blink code for malfunction indicator light	06: Malfunction indicator light flashes 6x short
Error level condition	Throttle valve position sensor circuit A – circuit fault Voltage: ≤ 0.352 V Time: ≥ 3 s Throttle valve position sensor circuit A – input signal too high Voltage: ≥ 4.785 V Time: ≥ 3 s

Blink code for malfunction indicator light	09: Malfunction indicator light flashes 9x short
Error level condition	Induction manifold pressure sensor – circuit fault Voltage: ≥ 4.121 V Time: ≥ 3 s Induction manifold pressure sensor – input signal too low Voltage: ≤ 0.215 V Time: ≥ 3 s

Blink code for malfunction indicator light	12: Malfunction indicator light flashes 1x long, 2x short
Error level condition	Coolant temperature sensor – circuit malfunction Voltage: ≥ 4.785 V Time: ≥ 3 s Coolant temperature sensor – input signal too low Voltage: ≤ 0.137 V Time: ≥ 3 s

Blink code for malfunction indicator light	13: Malfunction indicator light flashes 1x long, 3x short
Error level condition	Intake air temperature sensor - circuit fault Voltage: ≥ 4.824 V Time: ≥ 3 s Intake air temperature sensor – input signal too low Voltage: ≤ 0.195 V Time: ≥ 3 s

Blink code for malfunction indicator light	15: Failure indicator light flashes 1x long, 5x short
Error level condition	Tilt sensor – input signal too low Voltage: ≤ 0.176 V Time: ≥ 25.5 s Tilt sensor – open / input signal too high Voltage: ≥ 4.57 V Time: ≥ 25.5 s

Blink code for malfunction indicator light	21: Malfunction indicator light flashes 2x long, 1x short
Error level condition	Battery voltage – input voltage too high Engine control unit power supply: ≥ 15.98 V Time: ≥ 2 s

Blink code for malfunction indicator light	22: Failure indicator light flashes 2x long, 2x short
Error level condition	Gear position sensor – input signal too low Time: ≥ 0.1 s Gear position sensor – input signal too high Time: ≥ 0.1 s Gear position sensor malfunction

Blink code for malfunction indicator light	33: Malfunction indicator lamp flashes 3x long, 3x short
Error level condition	Injection valve cylinder 1 – circuit fault Time: ≥ 2.0 s

Blink code for malfunction indicator light	37: Malfunction indicator light flashes 3x long, 7x short
Error level condition	Ignition coil – circuit fault Time: ≥ 2.0 s

Blink code for malfunction indicator light	41: Malfunction indicator light flashes 4x long, 1x short
Error level condition	Fuel pump controller – short circuit to ground/open circuit The engine is switched off: ≥ 3 s Fuel pump controller – open circuit/short circuit to plus The engine is switched off: ≥ 3 s

Blink code for malfunction indicator light	43: Failure indicator light flashes 4x long, 3x short
Error level condition	Radiator fan control – short circuit to ground or open circuit Radiator fan control – short circuit to plus

Blink code for malfunction indicator light	65: Failure indicator light flashes 6x long, 5x short
Error level condition	EEPROM – malfunction Read data and write data are different.

23.1 Engine

23.1.1 Technical data - engine

Design	1-cylinder 4-stroke engine, water-cooled
Displacement	510.9 cm³ (31.177 in³)
Stroke	72 mm (2.83 in)
Bore	95 mm (3.74 in)
Compression ratio	12.75:1
Control	OHC, 4 valves controlled via rocker arm
Valve clearance	
Intake at: 20 °C (68.0 °F)	0.10 mm … 0.15 mm (0.0039 in … 0.0059 in)
Exhaust at: 20 °C (68.0 °F)	0.12 mm … 0.17 mm (0.0047 in … 0.0067 in)
Valve diameter, intake	40 mm (1.57 in)
Valve diameter, exhaust	33 mm (1.30 in)
Idle speed	1,800 rpm … 1,900 rpm (30.00 Hz … 31.67 Hz)
Crankshaft bearing	2-cylinder roller bearing
Big (bottom) end bearing	Plain bearing
Wrist pin bearing	Bearing bush
Piston	Forged light alloy
Piston rings	1 compression ring, 1 oil scraper ring
Engine lubrication	Pressure circulation lubrication with 2 trochoidal pumps
Primary transmission	29:72
Alternator	• 14 V • 196 W (0.263 hp)
Clutch	Multidisc clutch in oil bath, hydraulically activated
Transmission	6 speed transmission, claw shift
Gear ratios	
1st gear	13:33
2nd Gear	16:30
3rd Gear	18:26
4th Gear	22:26
5th Gear	23:23
6th Gear	26:22
Ignition system	Contactless controlled fully electronic ignition with digital ignition adjustment
Spark plug	NGK LZMAR8BI-10

Plug gap of spark plug	1.0 mm (0.039 in)
Cooling	Liquid cooling, permanent circulation of coolant by water pump
Starting aid	Starter motor

23.1.2 Capacities - engine

engine oil	
Engine oil (10W/50) (p. 177) fully synthetic	1.2 l (0.32 liq. gal_{US})
coolant	
Coolant (p. 178) Antifreeze protection to at least: −25 °C (−13.0 °F)	0.95 l (0.251 liq. gal_{US})

23.2 Chassis

23.2.1 Technical data - chassis

Frame	Central tube frame made of chrome molybdenum steel tubing
Fork	**WP XPLOR Closed Cartridge**
Suspension travel:	
front	300 mm (11.81 in)
rear	300 mm (11.81 in)
Triple clamp offset	22 mm (0.87 in)
Shock absorber	**WP XACT LDS**
Brake system	Disc brakes, floating brake calipers
Brake discs - diameter	
front	260 mm (10.24 in)
rear	220 mm (8.66 in)
Brake disc wear limit	
front	2.5 mm (0.098 in)
rear	3.5 mm (0.138 in)
Final drive	14:48
Chain	520
Rear sprockets available	• 48 teeth • 50 teeth • 52 teeth
Steering head angle	63.9° (1.115 rad)

Wheelbase	1,489 ±10 mm (58.62 ±0.39 in)
Seat Height unloaded	952 mm (37.48 in)
Ground clearance unloaded	343 mm (13.50 in)
Weight without fuel approx.	109.8 kg (242.07 lb)
Maximum permissible front axle load	145 kg (319.7 lb)
Maximum permissible rear axle load	190 kg (418.9 lb)
Maximum permissible total weight	335 kg (738.5 lb)

23.2.2 Technical data - tires

Tire front	Rear tire
90/90 - 21 M/C 54S M+S TT Continental TKC80	120/90 - 18 M/C 65R TT Continental TKC80
The tires specified represent one of the possible series production tires. For alternative manufacturers, if any, contact an authorized manufacturer or qualified tire dealership. If local road approval regulations apply, these and the respective technical specifications must be observed.	

23.2.3 Capacities - vehicle

Total fuel tank capacity, approx.	
Super unleaded (ROZ 95) (p. 176)	8.0 l (2.11 liq. gal_{US})

23.3 Electrics

23.3.1 Battery

12-V battery	HJTZ5S-FP-C	Lithium-ion battery Battery voltage: 12 V Nominal capacity: 2.0 Ah Maintenance-free
Button cell	CR 2430	Battery voltage: 3 V

23.3.2 Fuses

Fuse	58011109120	20 A

23.3.3 Lamps

Headlight	LED
Parking light	LED

Indicator lamps	W2,3W / Sockel W2x4,6d	12 V 2.3 W (0.0031 hp)
Turn signal	R10W / Sockel BA15s	12 V 10 W (0.013 hp)
Brake/tail light	LED	
License plate lighting	LED	

23.4 Fork

23.4.1 Technical data - fork

Fork part number	A390C169Z402000

Fork	**WP XPLOR Closed Cartridge**
Compression damping	
Comfort	17 clicks
Standard	15 clicks
Sport	7 clicks
Rebound damping	
Comfort	19 clicks
Standard	17 clicks
Sport	9 clicks
Spring length with preload spacer(s)	457 mm (17.99 in)
Spring rate	
Weight of rider: 65 kg … 75 kg (143.3 lb … 165.3 lb)	4.6 N/mm (26.27 lb_f/in)
Weight of rider: 75 kg … 85 kg (165.3 lb … 187.4 lb)	4.8 N/mm (27.41 lb_f/in)
Weight of rider: 85 kg … 95 kg (187.4 lb … 209.4 lb)	5.0 N/mm (28.55 lb_f/in)
Fork length	940 mm (37.01 in)

23.4.2 Capacities - fork

Oil capacity, outer assembly	
Fork oil (48601166S1) (SAE 4) (p. 177)	350 ml (11.83 fl. oz_{US})
Oil capacity, cartridge	
Fork oil (48601166S1) (SAE 4) (p. 177)	175 ml (5.92 fl. oz_{US})

23.5 Shock absorber

23.5.1 Technical data - shock absorber

Shock absorber part number	A390C467Z408000

Shock absorber	**WP XACT LDS**
Low-speed compression damping	
Comfort	18 clicks
Standard	15 clicks
Sport	12 clicks
High-speed compression damping	
Comfort	2.5 turns (900°)
Standard	2 turns (720°)
Sport	1.5 turns (540°)
Rebound damping	
Comfort	18 clicks
Standard	15 clicks
Sport	12 clicks
Preload	7 mm (0.28 in)
Spring rate	
Weight of rider: 65 kg … 75 kg (143.3 lb … 165.3 lb)	42 N/mm (239.8 lb_f/in)
Weight of rider: 75 kg … 85 kg (165.3 lb … 187.4 lb)	45 N/mm (257.0 lb_f/in)
Weight of rider: 85 kg … 95 kg (187.4 lb … 209.4 lb)	48 N/mm (274.1 lb_f/in)
Spring length	240 mm (9.45 in)
Gas assisted	10 bar (145 psi)
Static sag	40 mm (1.57 in)
Rider sag	110 mm (4.33 in)
Installation position	456.3 mm (17.965 in)

23.5.2 Capacities - shock absorber

Oil capacity, shock absorber	
Shock absorber oil (50180751S1) (SAE 2.5) (p. 178)	Fill to the maximum mark

23.6 Tightening torque

23.6.1 Engine tightening torques

Screw, oil nozzle bent for piston cooling M4	2 Nm (1.5 ft·lb$_f$) **Loctite® 243**
Oil nozzle for the clutch lubrication (alternator cover sealing surface) M4	0.8 Nm (0.59 ft·lb$_f$)
Screw, gear position sensor M5×14	5 Nm (3.7 ft·lb$_f$) **Loctite® 243**
Oil nozzle for piston cooling M5	2 Nm (1.5 ft·lb$_f$) **Loctite® 243**
Detent arm screw M5	6 Nm (4.4 ft·lb$_f$) **Loctite® 243**
Screw, pressure pump cover M5×14	6 Nm (4.4 ft·lb$_f$) **Loctite® 243**
Screw, bearing retainer M5	6 Nm (4.4 ft·lb$_f$) **Loctite® 243**
Screw, suction pump cover M5×16	6 Nm (4.4 ft·lb$_f$) **Loctite® 243**
Stator screw M5	6 Nm (4.4 ft·lb$_f$) **Loctite® 2701**
Crankshaft speed sensor screw and cable retainer M5	6 Nm (4.4 ft·lb$_f$) **Loctite® 243**
Oil nozzle for timing chain lubrication M5	2 Nm (1.5 ft·lb$_f$) **Loctite® 243**
Screw, lock washer, oil pump idler gear M5×10	6 Nm (4.4 ft·lb$_f$) **Loctite® 243**
Screws, main bearing lock washer, transmission bearings M5×12	6 Nm (4.4 ft·lb$_f$) **Loctite® 243**
Evaporative emission system vacuum fitting M6	2.5 Nm (1.84 ft·lb$_f$) **Loctite® 243**
Screw plug EVAP M6	5 Nm (3.7 ft·lb$_f$) **Loctite® 243**

Nut, water pump impeller M6	6 Nm (4.4 ft·lb$_f$) **Loctite® 243**
Exhaust flange screw M6×16	10 Nm (7.4 ft·lb$_f$) **Loctite® 243**
Screw, torque governor M6	10 Nm (7.4 ft·lb$_f$) **Loctite® 243**
Screw, starter motor M6×25	10 Nm (7.4 ft·lb$_f$)
Screw, clutch cover M6	10 Nm (7.4 ft·lb$_f$)
Screw, engine case M6	10 Nm (7.4 ft·lb$_f$)
Screw, oil filter cover M6×16	10 Nm (7.4 ft·lb$_f$)
Shift star screw M6×30	10 Nm (7.4 ft·lb$_f$) **Loctite® 243**
Screw, shift lever M6×16	14 Nm (10.3 ft·lb$_f$) **Loctite® 243**
Timing chain-securing guide screw M6	10 Nm (7.4 ft·lb$_f$) **Loctite® 243**
Screw, timing chain tensioner M6	10 Nm (7.4 ft·lb$_f$)
Slide rail screw M6	10 Nm (7.4 ft·lb$_f$) **Loctite® 243**
Screw, valve cover M6	10 Nm (7.4 ft·lb$_f$)
Screw, clutch slave cylinder M6	10 Nm (7.4 ft·lb$_f$)
Drain plug, water pump cover M6×25	10 Nm (7.4 ft·lb$_f$)
Screw, balancer shaft fastening to water pump cover M6	10 Nm (7.4 ft·lb$_f$) **Loctite® 222**
Remaining screws on water pump cover M6	10 Nm (7.4 ft·lb$_f$)
Screw, ignition cover with copper washer M6	10 Nm (7.4 ft·lb$_f$)
Screw, cylinder head M6	10 Nm (7.4 ft·lb$_f$)
Remaining screws, alternator cover M6	10 Nm (7.4 ft·lb$_f$)

Screw, rocker arm bearing M7×1		15 Nm (11.1 ft·lb$_f$)
Oil channel screw plug M7		9 Nm (6.6 ft·lb$_f$) **Loctite® 243**
Crankshaft clamp screw plug M8		10 Nm (7.4 ft·lb$_f$)
Screw plug, timing chain tensioner M8		8 Nm (5.9 ft·lb$_f$)
Coolant temperature sensor M10×1.25		12 Nm (8.9 ft·lb$_f$)
Front sprocket screw M10		60 Nm (44.3 ft·lb$_f$) **Loctite® 2701**
Oil channel screw plug M10		15 Nm (11.1 ft·lb$_f$) **Loctite® 243**
Screw, cylinder head M10×1.25 Engine oil	1.	Apply oil to collar and thread
	2.	10 Nm (7.4 ft·lb$_f$)
	3.	30 Nm (22.1 ft·lb$_f$)
	4.	50 Nm (36.9 ft·lb$_f$)
Spark plug M10×1		10 Nm … 12 Nm (7.4 ft·lb$_f$ … 8.9 ft·lb$_f$)
Screw, rotor M10×1		70 Nm (51.6 ft·lb$_f$)
Oil drain plug with magnet M12×1.5		20 Nm (14.8 ft·lb$_f$)
Screw plug, oil pressure control valve M12×1.5		20 Nm (14.8 ft·lb$_f$)
Screw plug, crankcase M16×1.5		15 Nm (11.1 ft·lb$_f$)
Nut, inner clutch hub M18×1.5		100 Nm (73.8 ft·lb$_f$)
Nut, primary gear wheel M18LH×1.5		120 Nm (88.5 ft·lb$_f$)
Plug, oil screen M20×1.5		15 Nm (11.1 ft·lb$_f$)
Screw plug, alternator cover M24×1.5		18 Nm (13.3 ft·lb$_f$)

23.6.2 Chassis tightening torques

Screw, radiator hoses clip	2.4 Nm (1.77 ft·lb_f)
Screw, hose clamp for air boot on throttle body	2.8 Nm (2.07 ft·lb_f)
Hose connector, active carbon filter	3.8 Nm (2.80 ft·lb_f)
Screw, fixed grip M4	5 Nm (3.7 ft·lb_f) **Loctite® 243**
Screw, hose clamp, throttle body M4	5 Nm (3.7 ft·lb_f)
Remaining nuts on chassis M5	5 Nm (3.7 ft·lb_f)
Remaining screws on chassis M5	5 Nm (3.7 ft·lb_f)
Screw, battery terminal M5	2.5 Nm (1.84 ft·lb_f)
Screw, light switch M5	1 Nm (0.7 ft·lb_f)
Screw, turn signal switch M5	1 Nm (0.7 ft·lb_f)
Screw, intake air temperature sensor M5	2.7 Nm (1.99 ft·lb_f)
Screw, frame protector M5	3 Nm (2.2 ft·lb_f)
Screw, throttle body cover M5	2.6 Nm (1.92 ft·lb_f)
Nut, starter motor M6	4 Nm (3.0 ft·lb_f)
Remaining nuts on chassis M6	10 Nm (7.4 ft·lb_f)
Remaining screws on chassis M6	10 Nm (7.4 ft·lb_f)
Screw, throttle twist grip M6	5 Nm (3.7 ft·lb_f)
Screw, rear brake disc M6	14 Nm (10.3 ft·lb_f) **Loctite® 243**
Screw, front brake disc M6	14 Nm (10.3 ft·lb_f) **Loctite® 243**
Screw, chain slider guard M6	6 Nm (4.4 ft·lb_f) **Loctite® 243**

Screw, ball joint of push rod on rear brake cylinder M6	10 Nm (7.4 ft·lb$_f$) **Loctite® 243**
Fender screw M6	12 Nm (8.9 ft·lb$_f$)
Screw, seat installation M6	8 Nm (5.9 ft·lb$_f$)
Brake line guide screw on swingarm M6	4.5 Nm (3.32 ft·lb$_f$) **Loctite® 243**
Screw, connector support incl. dashboard M6	5 Nm (3.7 ft·lb$_f$)
Screw, ground wire on frame M6	10 Nm (7.4 ft·lb$_f$)
Screw, starter cable to starter relay M6	6 Nm (4.4 ft·lb$_f$)
Screw, hand lever M6	5 Nm (3.7 ft·lb$_f$)
Screw, battery holding bracket M6	6 Nm (4.4 ft·lb$_f$)
Screw, fuel tank spoiler on radiator M6	6 Nm (4.4 ft·lb$_f$)
Nut, throttle cable on throttle body M6	3 Nm (2.2 ft·lb$_f$)
Screw, front chain guide M6	10 Nm (7.4 ft·lb$_f$)
Screw, rear chain guide M6	10 Nm (7.4 ft·lb$_f$) **Loctite® 243**
Nut, rear sprocket screw M8	35 Nm (25.8 ft·lb$_f$) **Loctite® 2701**
Nut, rim lock M8	12 Nm (8.9 ft·lb$_f$)
Rear brake lever stop nut M8	20 Nm (14.8 ft·lb$_f$)
Remaining nuts on chassis M8	25 Nm (18.4 ft·lb$_f$)
Remaining screws on chassis M8	25 Nm (18.4 ft·lb$_f$)
Screw, front brake caliper M8	25 Nm (18.4 ft·lb$_f$) **Loctite® 243**
Milled upper triple clamp screw M8	17 Nm (12.5 ft·lb$_f$)
Milled lower triple clamp screw M8	12 Nm (8.9 ft·lb$_f$)

Screw, fork shoe M8	15 Nm (11.1 ft·lb$_f$)
Screw, upper steering stem M8	20 Nm (14.8 ft·lb$_f$) **Loctite® 243**
Screw, manifold M8	15 Nm (11.1 ft·lb$_f$)
Handlebar clamp screw M8	20 Nm (14.8 ft·lb$_f$)
Screw, chain slider M8	15 Nm (11.1 ft·lb$_f$)
Screw, engine brace on engine M8×20	25 Nm (18.4 ft·lb$_f$) **Loctite® 243**
Screw, subframe, top M8	35 Nm (25.8 ft·lb$_f$) **Loctite® 243**
Screw, side stand attachment M8	33 Nm (24.3 ft·lb$_f$) **Loctite® 2701**
Screw, subframe, bottom M8	30 Nm (22.1 ft·lb$_f$) **Loctite® 2701**
Screw, engine brace on frame M8×15	25 Nm (18.4 ft·lb$_f$) **Loctite® 2701**
Screw, front sprocket cover M8	15 Nm (11.1 ft·lb$_f$)
Screw, wheel speed sensor, fork shoe M8	4.5 Nm (3.32 ft·lb$_f$)
Nut, brake pedal on frame M10	45 Nm (33.2 ft·lb$_f$)
Engine bracket screw M10	60 Nm (44.3 ft·lb$_f$)
Remaining nuts on chassis M10	45 Nm (33.2 ft·lb$_f$)
Remaining screws on chassis M10	45 Nm (33.2 ft·lb$_f$)
Screw, handlebar mount M10	40 Nm (29.5 ft·lb$_f$) **Loctite® 243**
Top shock absorber screw M10	60 Nm (44.3 ft·lb$_f$) **Loctite® 2701**
Bottom shock absorber screw M10	60 Nm (44.3 ft·lb$_f$) **Loctite® 2701**

Screw, sprocket M10	60 Nm (44.3 ft·lb$_f$) **Loctite® 2701**
Screw connection, pull rod on frame M14×1.5	60 Nm (44.3 ft·lb$_f$)
Nut, swingarm pivot M16×1.5	100 Nm (73.8 ft·lb$_f$)
Screw, top steering head M20×1.5	12 Nm (8.9 ft·lb$_f$)
Screw, wheel spindle, front M20×1.5	35 Nm (25.8 ft·lb$_f$)
Nut, wheel spindle, rear M22	80 Nm (59.0 ft·lb$_f$)
Screw-in nozzle, cooling system M24×1.5	7.5 Nm (5.53 ft·lb$_f$) **Loctite® 243**
Outer diaphragm fitting **EJOT PT®** – 35×25	0.8 Nm (0.59 ft·lb$_f$)
Inner diaphragm fitting **EJOT PT®** – 35×25	1 Nm (0.7 ft·lb$_f$)
Spoke nipple, front wheel M4,5	6 Nm (4.4 ft·lb$_f$)
Spoke nipple, rear wheel M4,5	6 Nm (4.4 ft·lb$_f$)
Screw, emergency OFF switch **EJOT PT®** – K50×18	2 Nm (1.5 ft·lb$_f$)
Screw, pressure regulator **EJOT PT®** – K60×25 – Z	2.3 Nm (1.70 ft·lb$_f$)
Screw, seat installation **EJOT EJOFORM®** – K60×23/18	2.5 Nm (1.84 ft·lb$_f$)
Remaining screws on chassis **EJOT PT®** – K60×25 – Z	2 Nm (1.5 ft·lb$_f$)
Screw, fuel pump **EJOT PT®** – K60×30 – AF6	2.5 Nm (1.84 ft·lb$_f$)
Screw, air box subframe **EJOT PT®** – 60×20	5 Nm (3.7 ft·lb$_f$)
Nut, linkage lever on angle lever M16x1,5	80 Nm (59.0 ft·lb$_f$)

24.1 Recycling

I02045-10

Further information is available at the following website.
Recycling information website: https://www.quefairedemesdechets.fr

A Technical terms

OBD	On-board diagnosis	Vehicle system, which monitors the specified parameters of the vehicle electronics

B Fuels

Super unleaded

Standards	
• ROZ 95	→ DIN EN 228

Fuel additive

Recommended supplier
MOTOREX®
• FUEL STABILIZER

C Operating supplies

Off-road chain spray

Recommended supplier	
MOTOREX®	
• CHAINLUBE OFF ROAD	

Fork oil

Order details	
• 48601166S1	
Standards	
• SAE 4	→ SAE

Universal oil spray

Recommended supplier	
MOTOREX®	
• JOKER 440 SYNTHETIC	

Long-life grease

Recommended supplier	
MOTOREX®	
• Bike Grease 2000	

Engine oil

Recommended supplier	
MOTOREX®	
• CROSS POWER 4T	
Standards	
→ JASO T903 MA2	
• 10W/50	→ SAE
Properties	
• fully synthetic	

High viscosity grease

Recommended supplier	
SKF®	
• LGHB 2	

Silicone spray

Recommended supplier	
MOTOREX® • SILICONE SPRAY	

Shock absorber oil

Order details	
• 50180751S1	
Standards	
• SAE 2.5	→ SAE

Oil for foam air filter

Recommended supplier
MOTOREX® • RACING BIO AIR FILTER OIL

Brake fluid DOT 5.1

Recommended supplier
MOTOREX® • BRAKE FLUID DOT 5.1
Standards
→ DOT

Coolant

Recommended supplier	
MOTOREX® • COOLANT M3.0	
Properties	
• Antifreeze protection to at least	−25 °C (−13.0 °F)

D Cleaning agents

Chain cleaner

Recommended supplier

MOTOREX®
- CHAIN CLEAN

Preserving materials

Recommended supplier

MOTOREX®
- MOTO PROTECT

Air filter cleaning agent

Recommended supplier

MOTOREX®
- RACING BIO AIR FILTER CLEANER

Cleaning agents for plastics, glass, lacquers, metals, windshields and visors

Recommended supplier

MOTOREX®
- QUICK CLEANER

Environmentally neutral universal cleaning agent

Recommended supplier

MOTOREX®
- MOTO CLEAN UNIVERSAL

E Icons

E.1 Symbol colors

E.1.1 Yellow and orange symbols

Yellow and orange symbols indicate a malfunction status that requires prompt intervention. Active driving aids are also represented by yellow or orange symbols.

Fi	Malfunction indicator lamp lights up/flashes yellow
	The fuel level warning lamp lights up yellow

1

12 V battery
- charging 126
- installation 125
- removing 124
- starting power 46

A

Accessories 17

Air filter
- cleaning 85
- installing 85
- removing 84

Air filter box
- cleaning 85

Air filter box cover
- installation 84
- removing 84

Auxiliary substances 17

B

Brake discs
- checking 105

Brake fluid
- adding front brake 107
- adding to rear brake 113

Brake fluid level
- checking on front brake 106
- checking on rear brake 112

Brake lining retainers
- checking on front brake 108
- checking on rear brake 114

Brake pad
- checking on front brake 108

Brake pads
- changing on the rear brake 115
- checking on rear brake 114
- of the front brake, changing 109

Brake pedal 28
- adjusting the basic position 111
- checking the free travel 111

C

Chain
- checking 97
- cleaning 94

Chain guide
- checking 97

Chain tension
- adjusting 96
- checking 95

Characteristic map of the throttle response
- adjusting 141

Checking basic chassis setting with
- rider's weight 58

Clothing 13

Clutch
- changing fluid 102
- checking/correcting fluid level 101

Clutch lever 23
- adjusting the basic position 101

Cold start button 27

Combination instrument
- adjusting 33
- Setting the clock 33

Compression damping
- adjusting the fork 65

Coolant
- antifreeze and coolant level, checking 135
- draining 137
- level, checking 136
- refilling 137

Cooling system 135

Customer service 18

D

Dashboard
- Combination instrument battery, changing 133
- overview 31
- setting kilometers or miles 32
- viewing the lap time 34

Defined use 14

Diagnostic connector 134

Difficult operating conditions 47
- dry sand 47
- high temperatures 49
- low temperature 49
- muddy surfaces 48
- slow speed 49
- snow 49
- wet sand 48
- wet surfaces 48

E

Electric starter 24

Engine
running in 46
Engine oil
adding 150
changing 148
Engine oil level
checking 147
Environment 13

F

Figures 17
Fork legs
bleeding 68
checking basic setting 65
cleaning the dust boots 69
installation 72
removing 71
Fork protector
installation 70
removing 70
Frame
checking 99
Frame protector
installation 71
removing 70
Front fender
installation 79
removing 78
Front sprocket
checking 97
Front wheel
installing 119
removing 118
Frost protection
checking 135
Fuel screen
changing 146
Fuel tank
installation 92
removing 90
Fuel tank cap
closing 26
opening 26
Fuse
changing the main fuse 129
Fuses 164

G

Gear shift lever 28
adjusting the basic position 144
checking the basic position 144

H

Hand grip
checking 100
Handbrake lever 23
checking the free travel 105
free travel, adjusting 105
Handlebar position 66
adjusting 67
Headlight
adjusting headlight range 132
Headlight bulb
changing 130
Headlight mask with headlight
installation 130
removing 129
Headlight setting
checking 131
High-speed compression damping
adjusting the shock absorber 59

I

Idle speed
adjusting 143
Idle speed adjustment screw 27
Ignition lock 25
Implied warranty 17
Improper use 14
Intended use 14

K

Kill switch 25

L

Lamps 164
Lower triple clamp
installation 74
removing 73
Low-speed compression damping
adjusting the shock absorber 58

M

Main fuse
changing 129
Manufacturer's warranty 17

Motorcycle
cleaning 152
raising with lift stand 68
removing from lift stand 68

Muffler
changing damping material 90
clean spark arrestor 88
installation 88
removing 87

O

OCU 134

Oil filter
changing 148

Oil screens
cleaning 148

Owner's manual 13

P

Preparing for use
after storage 156
checks and maintenance measures when preparing for use 50
Notes on preparing for first use 45

Protective clothing 13

R

Rear sprocket
checking 97

Rear wheel
installation 120
removing 119

Rebound damping
adjusting the fork 66
adjusting the shock absorber 60

Recycling 174

Refueling
fuel 53

Resources 17

Rider sag
adjusting 64

S

Safe use 12

Seat
mounting 83
removing 83

Service 17

Shock absorber
adjusting the spring preload 63
checking static sag 62
checking the rider sag 62
installation 81
removing 79

Side fairing right
installation 87
removing 86

Side stand 28

Skid plate
installation 104
removing 103

spare parts 17

Spoke tension
checking 123

Starting 50

Starting performance of lithium-ion batteries at low temperatures 46

Steering
locking 29
unlocking 30

Steering head bearing
lubricating 78

Steering head bearing play
adjusting 77
checking 76

Storage 155

Swingarm
checking 99

T

Technical specifications
tires 164

Throttle cable play
adjusting 140
checking 140

Throttle cable routing
checking 99

Throttle twist grip 23

Throttle valve position
programming 143

Tire condition
checking 121

Tire pressure
checking 122

Transportation 53

Turn signal bulb
changing 132

W

Winter operation
checks and maintenance steps 153

Work rules 13

3402956en

02/09/2026

Husqvarna Mobility GmbH
Stallhofnerstraße 3 | 5230 Mattighofen