Owner's manual **2027**

Husqvarna

FE 350
FE 350 PRO

Item no.: 3402953en

FOR | PIONEERS

Dear Husqvarna Mobility-customer,

Congratulations on your decision to purchase a Husqvarna motorcycle. You are now the owner of a state-of-the-art, sporty motorcycle that you will continue to enjoy for a long time if you maintain it properly.

We hope you enjoy your bike and have a safe journey at all times!

You can enter the serial numbers of your vehicle below to find the serial numbers more quickly if required:

Vehicle identification number (p. 18)	Stamp of the contractual partner
Engine number (p. 18)	

The owner's manual contained the latest information for this model series at the time of publication. Slight deviations resulting from continuing development and design of the motorcycles cannot, however, be completely excluded.

All specifications are non-binding. Husqvarna Mobility GmbH specifically reserve the right to modify or delete technical specifications, prices, colors, forms, materials, services, designs, equipment, etc. without prior notice and without specifying reasons, to adapt these to local conditions, as well as to stop production of a particular model without prior notice. Husqvarna Mobility assumes no liability for delivery options, deviations from figures and descriptions, or for misprints and other errors. The models portrayed partly contain special equipment that does not belong to the regular scope of supply.

© 2026 Husqvarna Mobility GmbH, Mattighofen Austria

All rights reserved. Figures: Visus Studios/INDG/Husqvarna Mobility

Written permission from the copyright owner is required before any duplication or reproduction.

ISO 9001

Husqvarna Mobility GmbH applies quality assurance processes that lead to the highest possible product quality as defined in the ISO 9001 international quality management standard.

12 100 6061

REG.NO. 12 100 6061

Issuing institution:

TÜV SÜD Management Service GmbH

Husqvarna Mobility GmbH
Stallhofnerstraße 3
5230 Mattighofen, Austria

This document is valid for:

FE 350 EU (F2203427)

FE 350 BR (F2240427)

FE 350 PRO EU (F2203527)

3402953en

21/08/2026

Table of contents

1 Means of representation 9

1.1 Conventions 9
1.1.1 Icons 9
1.1.2 Formatting 9
1.1.3 Abbreviations 9

2 Safety 10

2.1 Safety instructions 10
2.2 Warning against tampering with the machine 10
2.3 Safe use 11
2.4 Protective clothing 11
2.5 Work rules 11
2.6 Environment 12
2.7 Owner's manual 12
2.8 Use definition – intended use 12
2.9 Improper use 13

3 Important notes 14

3.1 Manufacturer's warranty, implied warranty 14
3.2 Auxiliary material, operating material 14
3.3 Spare parts, accessories 14
3.4 Service 14
3.5 Figures 14
3.6 Customer service 15

4 View of the vehicle 16

4.1 View of vehicle, left side (example) 16
4.2 View of vehicle, right side (example) 16

5 Serial number 18

5.1 Vehicle identification number 18
5.2 Type approval label 18
5.3 Key number 18
5.4 Engine number 18
5.5 Fork part number 19
5.6 Shock absorber part number 19

6 Controls 20

6.1 Clutch lever 20
6.2 Handbrake lever 20
6.3 Throttle grip 20
6.4 Horn button 20
6.5 Light switch 21
6.6 Turn signal switch 21
6.7 Passenger strap **(All special models)** 21
6.8 Electric starter 21
6.9 Kill switch 22
6.10 Combination switch 22
6.11 Overview of indicator lights 23
6.12 Opening the fuel tank cap 23
6.13 Closing the fuel tank cap 24
6.14 Cold start button 24
6.15 Idle speed adjustment screw 25
6.16 Gear shift lever 25
6.17 Brake pedal 26
6.18 Side stand 26
6.19 Steering lock **(All EU models)** 26
6.20 Locking the steering **(All EU models)** 27
6.21 Unlocking the steering **(All EU models)** 27

7 Combination instrument 28

7.1 Combination instrument overview 28
7.2 activation and testing 28
7.2.1 Activating combination instrument 28
7.2.2 Display test 28
7.2.3 **WS** (wheel size) 28
7.3 Setting kilometers or miles 29
7.4 Setting the combination instrument 29
7.5 Setting the clock 30
7.6 Viewing the lap time 30
7.7 Display mode **SPEED** (speed) 31
7.8 Display mode **SPEED/H** (operating hours) 31
7.9 Setup menu 32
7.10 Adjusting the unit of measurement 33
7.11 Display mode **SPEED/CLK** (time) 33
7.12 Setting the clock 34
7.13 Display mode **SPEED/LAP** (lap time) 34
7.14 Viewing the lap time 35
7.15 Display mode **SPEED/ODO** (odometer) 35
7.16 Display mode **SPEED/TR1** (trip master 1) 36
7.17 Display mode **SPEED/TR2** (trip master 2) 36
7.18 Adjusting **TR2** (trip master 2) 37
7.19 Display mode **SPEED/A1** (average speed 1) 38
7.20 Display mode **SPEED/A2** (average speed 2) 38
7.21 Display mode **SPEED/S1** (stop watch 1) 39
7.22 Display mode **SPEED/S2** (stop watch 2) 39

8 Preparing for use 40

8.1 Notes on preparing for first use 40
8.2 Running in the engine 41
8.3 Starting performance of lithium-ion batteries at low temperatures 41
8.4 Preparing the vehicle for difficult operating conditions 42
8.5 Preparing the vehicle for rides on dry sand 42
8.6 Preparing the vehicle for rides on wet sand 43
8.7 Preparing for rides on wet and muddy surfaces 43
8.8 Preparing vehicle for rides at high temperature or slow speed 44
8.9 Preparing the vehicle for low temperatures or snow 44

9 Riding instructions 45

9.1 Checks and maintenance measures when preparing for use 45
9.2 Starting the vehicle 45
9.3 Activating traction control 46
9.4 Starting off 47
9.5 Quickshifter 47
9.6 Activate the quickshifter 47
9.7 Shifting, riding 48
9.8 Braking 48
9.9 Stop, park 49
9.10 Transportation 49
9.11 Refueling 50

10 Service schedule 52

10.1 Service schedule 52

11 Tuning the chassis 54

11.1 Checking the basic chassis setting with the rider's weight 54
11.2 Compression damping of the shock absorber 54
11.3 Adjusting the low-speed compression damping of the shock absorber 54
11.4 Adjusting the high-speed compression damping of the shock absorber 55
11.5 Adjusting the rebound damping of the shock absorber 56
11.6 Measuring the dimension of the unloaded rear wheel 56
11.7 Checking the static sag of the shock absorber 57
11.8 Checking the rider sag of the shock absorber 57
11.9 Adjusting the preload for the shock absorber 58
11.10 Adjusting the rider sag 59
11.11 Checking the basic setting of the fork 60
11.12 Adjusting the compression damping of the fork 60
11.13 Adjusting the spring preload of the fork **(All special models)**..... 61
11.14 Adjusting the rebound damping of the fork 62
11.15 Handlebar position 62
11.16 Adjusting the handlebar position 63

12 Service work on the chassis 64

12.1 Raising the motorcycle with a lift stand 64
12.2 Removing the motorcycle from the lift stand 64
12.3 Bleeding the fork legs 64
12.4 Cleaning the dust boots of the fork legs 65
12.5 Removing the fork protector 66
12.6 Installing the fork protector 66
12.7 Removing the frame protector 67
12.8 Installing the frame protector 67
12.9 Removing the fork legs 67
12.10 Installing the fork legs 68
12.11 Removing the lower triple clamp 69
12.12 Installing the lower triple clamp 70
12.13 Checking the steering head bearing play 73
12.14 Adjusting the steering head bearing play 73
12.15 Lubricating the steering head bearing 74
12.16 Removing the front top fender 74
12.17 Installing the front top fender 75
12.18 Removing the shock absorber 76
12.19 Installing the shock absorber 77
12.20 Removing the seat 79
12.21 Mounting the seat 79
12.22 Removing air filter box cover 80
12.23 Installing air filter box cover 80
12.24 Removing the air filter 80
12.25 Installing the air filter 81

Table of contents

12.26 Cleaning the air filter and air filter box 81
12.27 Removing the right side fairing 82
12.28 Installing the right side cover 83
12.29 Removing the muffler 84
12.30 Installing muffler 84
12.31 Changing the damping material on the main silencer 85
12.32 Removing the fuel tank 85
12.33 Installing the fuel tank 87
12.34 Checking the chain for dirt 89
12.35 Cleaning the chain 89
12.36 Checking the chain tension 90
12.37 Adjusting the chain tension 91
12.38 Checking the chain, rear sprocket, front sprocket, and chain guide 92
12.39 Checking the frame 94
12.40 Checking the swingarm 94
12.41 Checking the throttle cable routing 94
12.42 Checking the hand grip 95
12.43 Program the Quickshifter 96
12.44 Checking/correcting the fluid level of hydraulic clutch 96
12.45 Adjusting the basic position of the clutch lever 97
12.46 Changing the hydraulic clutch fluid 97
12.47 Removing the skid plate 99
12.48 Installing the skid plate 99

13 Brake system 100

13.1 Checking the free travel on the hand brake lever 100
13.2 Adjusting the free travel of the handbrake lever 100
13.3 Checking the brake discs 100
13.4 Checking the brake fluid level for the front brake 101
13.5 Adding brake fluid for the front brake 102
13.6 Checking that the brake pads of the front brake are secured 103
13.7 Changing the brake pads of the front brake 104
13.8 Checking the free travel of the brake pedal 106
13.9 Adjusting the basic position of the brake pedal 106
13.10 Checking the brake fluid level for the rear brake 107
13.11 Adding brake fluid for the rear brake 108
13.12 Checking that the brake pads of the rear brake are secured 109
13.13 Changing the rear brake pads 109

14 Wheels, tires 112

14.1 Removing the front wheel 112
14.2 Installing the front wheel 113
14.3 Removing the rear wheel 114
14.4 Installing the rear wheel 115
14.5 Checking the tire condition 116
14.6 Checking the tire pressure 117
14.7 Checking the spoke tension 117

15 Electrics 119

15.1 Removing the 12 V battery 119
15.2 Installing the 12 V battery 120
15.3 Charging the 12 V battery 121
15.4 Changing the main fuse 124
15.5 Removing the headlight mask with the headlight 124
15.6 Installing the headlight mask with the headlight 125
15.7 Changing the headlight bulb 125
15.8 Checking the headlight setting 126
15.9 Adjusting the headlight range 127
15.10 Changing the turn signal bulb 127
15.11 combination instrument battery, changing 128
15.12 Diagnostic connector 129
15.13 OCU 129

16 Cooling system 130

16.1 Cooling system 130
16.2 Checking the frost protection and coolant level 130
16.3 Checking the coolant level 131
16.4 Draining the coolant 132
16.5 Refilling the coolant 132
16.6 Changing the coolant 133

17 Tuning the engine 135

17.1 Checking the play in the throttle cable 135
17.2 Adjusting the throttle cable play 135
17.3 Adjusting the characteristic map of the throttle response 136
17.4 Changing the mapping 138
17.5 adjusting the idle speed 138

17.6 Teaching the throttle valve position ... 139
17.7 Checking the basic position of the gear shift lever ... 140
17.8 Adjusting the basic position of the gear shift lever ... 140

18 Service work on the engine ... 142

18.1 Changing the fuel screen ... 142
18.2 Checking the engine oil level ... 143
18.3 Changing the engine oil and oil filter, cleaning the oil screens ... 144
18.4 Adding engine oil ... 146

19 Cleaning, care ... 148

19.1 Cleaning the motorcycle ... 148
19.2 Checks and maintenance steps for winter operation ... 149

20 Storage ... 151

20.1 Storage ... 151
20.2 Preparing for use after storage ... 152

21 Troubleshooting ... 153

21.1 troubleshooting ... 153

22 Flash codes ... 155

22.1 Flash codes ... 155

23 Technical specifications ... 158

23.1 Engine ... 158
23.1.1 Technical data - engine ... 158
23.1.2 Capacities - engine ... 159
23.2 Chassis ... 159
23.2.1 Technical data - chassis ... 159
23.2.2 Technical data - tires ... 160
23.2.3 Capacities - vehicle ... 161
23.3 Electrics ... 161
23.3.1 Battery ... 161
23.3.2 Fuses ... 161
23.3.3 Lamps ... 161
23.4 Fork ... 161
23.4.1 Technical data - fork **(All standard models)** ... 161
23.4.2 Capacities - fork **(All standard models)** ... 162
23.4.3 Technical data - fork **(All special models)** ... 162
23.4.4 Capacities - fork **(All special models)** ... 163
23.5 Shock absorber ... 163
23.5.1 Technical data - shock absorber ... 163
23.5.2 Shock absorber capacity ... 164
23.6 Tightening torque ... 164
23.6.1 Engine tightening torques ... 164
23.6.2 Chassis tightening torques ... 167

24 Recycling ... 172

24.1 Recycling ... 172

Notes ... 173

A Technical terms ... 173

B Fuels ... 174

C Operating supplies ... 175

D Cleaning agents ... 178

E Electrics ... 179

F List of symbols ... 181

F.1 Symbol colors ... 181
F.1.1 Yellow and orange symbols ... 181
F.1.2 Green and blue symbols ... 181

Index ... 182

1.1 Conventions

1.1.1 Icons

✓	Indicates a desired result (e.g. of a work step or a function).
✗	Indicates an undesired result (e.g. of a work step or a function).
	All work marked with this symbol requires specialist knowledge and technical understanding. Ensure that this work is carried out or supervised by trained personnel from an authorized contractual partner, and that any special tools required are used.
	Indicates a page reference.
	Indicates information with more details.
	Indicates a tip, e.g. to simplify work.
»	Indicates the result from a test step.
◀	Indicates the end of an activity, including any rework.

1.1.2 Formatting

Proprietary name	Indicates a proprietary name.
Name ®	Indicates a protected name.
Brand ™	Indicates a brand available on the open market.
Underlined terms	Refer to technical details of the vehicle or indicate technical terms that are explained in the glossary.

1.1.3 Abbreviations

2-pc.	two-part
Part no.	Part number
or	respectively
approx.	circa
etc.	et cetera
poss.	possibly/possible
if necessary	if necessary
cmpl.	complete
min.	at least
no.	number
no fig.	no figure
s.	see
among others	among others/not limited to
and the like	and the like
etc.	et cetera
cf.	compare
e.g.	for example

2.1 Safety instructions

Function of the safety instruction

Safety instruction brings attention to dangers when handling the product. Hazards are classified, named, described, and supplemented with information on how to avoid them.

- If there is a safety instruction before a list of instructions, the danger exists throughout the entire activity.
- If there is a safety instruction immediately before an instruction, the next step presents a danger.

Safety instruction layout

All safety instructions are identified by a signal word and a warning symbol. The combination of signal word and warning symbol determines the degree of danger.

DANGER
Indicates an imminent danger that leads to serious injury or death.

WARNING
Indicates a potentially imminent danger that could lead to serious injury or death.

CAUTION
Indicates a potentially imminent danger that can lead to minor or slight injuries.

NOTE
Indicates a situation that can lead to damage to the product or the product environment.

NOTE
Indicates a situation that can lead to environmental damage.

2.2 Warning against tampering with the machine

Tampering with the noise control system is prohibited. Federal law prohibits the following acts or the causing thereof:

1. The removal or rendering inoperative by any person other than for purposes of servicing, repair, or replacement, of any device or element of design incorporated into any new vehicle for the purpose of noise control prior to its sale or delivery to the ultimate purchaser or while it is in use, or
2. the use of the vehicle after such device or element of design has been removed or rendered inoperative by any person.

Among those acts presumed to constitute tampering are the acts listed below:

1. Removing or drilling through rear mufflers, baffle plates, manifolds, or other components that conduct exhaust gases.
2. Removing or puncturing parts of the intake system.
3. Lack of proper maintenance.
4. Replacing moving parts of the vehicle, or parts of the exhaust system or intake system, with parts other than those specified by the manufacturer.

An add-on or modified part must be compliant with applicable ARB evaporative emission control standards. A violation of this requirement is punishable by civil and/or criminal punishment.

2.3 Safe use

DANGER
Danger of accidents A rider who is not fit to ride poses a danger to themself and to others.
– Do not operate the vehicle if you are not fit to ride due to alcohol, drugs, or medication.
– Do not operate the vehicle if you are physically or mentally incapable of doing so.

DANGER
Danger of poisoning Exhaust gases are toxic and inhaling them may result in unconsciousness and death.
– Always ensure that there is sufficient ventilation when running the engine.
– Use suitable exhaust extraction when starting or running the engine in an enclosed space.

WARNING
Danger of burns Some vehicle components become hot when the vehicle is operated.
– Do not touch any parts such as the exhaust system, radiator, engine, damper, or brake system before the vehicle parts have cooled down.
– Allow the vehicle parts to cool down before performing any work on the vehicle.

The vehicle should only be used when it is in perfect technical condition, for its intended purpose, and in a safe and environmentally-friendly manner.
An appropriate driver's license is needed to drive the vehicle on public roads.
Have any faults that impair safety immediately remedied by an authorized contractual partner.
Observe the information and warning stickers on the vehicle.

2.4 Protective clothing

WARNING
Risk of injury Missing or inadequate protective clothing increases the risk of injury.
– Wear appropriate protective clothing such as helmet, boots, gloves as well as pants and a jacket with protectors on all rides.
– Always wear protective clothing that is in good condition and meets the legal regulations.

2.5 Work rules

Unless specified otherwise, the ignition must be switched off during all work (models with ignition lock, models with transponder key) or the engine must be at a standstill (models without ignition lock or transponder key).
Special tools are required for some work. The tools are not part of the vehicle, but can be ordered using the number in parentheses. Example: bearing puller (15112017000)
Unless otherwise noted, normal conditions apply to all tasks and descriptions.

Ambient temperature	20 °C (68.0 °F)
Ambient air pressure	1,013 mbar (14.69 psi)
Relative air humidity	60 ±5 %

During assembly, use new parts to replace parts which cannot be reused (e.g. self-locking screws and nuts, expansion screws, seals, sealing rings, O-rings, pins, and lock washers).
A thread lock (e.g. **Loctite®**) is required for some screw connections. Observe the manufacturer's specific instructions for use.
If thread lock (e.g. **Precote®**) has already been applied to a new part, do not apply any additional thread lock.

After disassembly, clean the parts that are to be reused and check them for damage and wear. Replace damaged or worn parts.

After completing a repair or service, check the operating safety of the vehicle.

2.6 Environment

Handling the vehicle responsibly reduces the risk of conflict with other road users and the surrounding area. The future of motorcycling also depends on using motorcycles legally, being environmentally conscious and respecting the rights of others.

When disposing of used oil, other operating and auxiliary fluids, and used components, the laws and regulations of the respective country must be observed.

As motorcycles are not subject to the EU regulations governing the disposal of end-of-life vehicles, there are no legal regulations that pertain to the disposal of an end-of-life motorcycle. More information is available from the authorized contractual partner.

2.7 Owner's manual

Read this owner's manual carefully and in full before riding off for the first time. The owner's manual contains information and tips on how to operate, handle, and service your vehicle, as well as advice on optimum tuning and how to avoid injuries.

Tip

Save this owner's manual on your smartphone, for example, so that you can access it at any time.

An authorized contractual partner will be happy to assist you if you are unsure.

The owner's manual is an important component of the vehicle. If the vehicle is sold, the owner's manual must be downloaded again by the new owner.

The owner's manual can be downloaded multiple times using the QR code or the link on the delivery certificate.

The owner's manual is also available for download from authorized contractual partners and on the Husqvarna Mobility website.

International Husqvarna Mobility website: https://www.husqvarna-motorcycles.com

A printed copy can be ordered from the following address.

Website for printed copy: https://print.ktm.com

2.8 Use definition – intended use

(All EU models)

This vehicle has been designed and built to withstand the typical stresses and strains of racing. This vehicle complies with the currently valid regulations and categories of the top international motorsports organizations.

Note

This vehicle is only authorized for operation on public roads in the homologated (restricted) version.

The derestricted version of this vehicle must only be operated in closed off areas away from public highway traffic.

This vehicle is designed for use in offroad endurance competition, and not primarily for use in motocross.

(BR models)

This vehicle has been designed and built to withstand the normal stresses and strains of offroad leisure use.

Note
This vehicle is homologated and approved for use on public roads.
No homologation-relevant components may be removed or modified.

2.9 Improper use

The vehicle may only be used as intended.

Improper use can result in danger to people, property and the environment.

Any use of the vehicle beyond the intended and defined use constitutes misuse.

Improper use includes the use of operating and auxiliary materials that do not meet the required specifications for the respective use.

3 Important notes

3.1 Manufacturer's warranty, implied warranty

The work prescribed in the service schedule must only be carried out by an authorized contractual partner and then confirmed in the electronic proof of service, as otherwise all warranty claims will be void. Damage or secondary damage caused by tampering with and/or conversions on the vehicle are not covered by the manufacturer's warranty.

3.2 Auxiliary material, operating material

Use operating materials and auxiliary materials in accordance with the operating instructions and specifications.

3.3 Spare parts, accessories

For safety reasons, only spare parts and accessory products approved by Husqvarna Mobility may be used. They may only be installed by an authorized contractual partner. Husqvarna accepts no liability for other products and any damage or loss resulting from their use.

Certain spare parts and accessory products are specified in parentheses in the descriptions. Authorized contractual partners will be happy to help.

You can find current accessories for your vehicle on the Husqvarna Mobility website.

International Husqvarna Mobility website: https://www.husqvarna-motorcycles.com

3.4 Service

A prerequisite for perfect operation and prevention of premature wear is that the service, care, and tuning work on the engine and chassis is properly carried out as described in the owner's manual. An incorrect suspension setting can lead to damage and breakage of chassis components.

Use of the vehicle under arduous conditions, such as on sand or on wet, dusty and muddy surfaces, can result in significantly increased wear of components, such as the powertrain, brake system, air filter, or suspension components. For this reason, it may be necessary to inspect or replace parts before the next scheduled service interval.

Please adhere to the prescribed run-in times and service intervals at all times. Strictly adhering to this will ensure a much longer service life for your motorcycle.

The relevant mileage or time interval is whichever occurs first.

A list of services that have already been carried out on the vehicle can be found in the Service area on the international Husqvarna Mobility website:

International Husqvarna Mobility website: https://www.husqvarna-motorcycles.com

Authorized contractual partners will be happy to answer any questions regarding the services performed.

The list of authorized contractual partners is available on the Husqvarna Mobility website.

3.5 Figures

Some of the figures in this document contain optional extras.

For clarity, some components may be shown disassembled or may not be shown at all. Disassembly is not always absolutely necessary in order to carry out the activities described. The textual information takes precedence.

3.6 Customer service

Authorized contractual partners will be happy to answer questions about the vehicle and Husqvarna Mobility.
The list of authorized contractual partners can be found on the Husqvarna Mobility website.
International Husqvarna Mobility website: https://www.husqvarna-motorcycles.com

4.1 View of vehicle, left side (example)

Note
Arrow faces in the direction of forward travel.

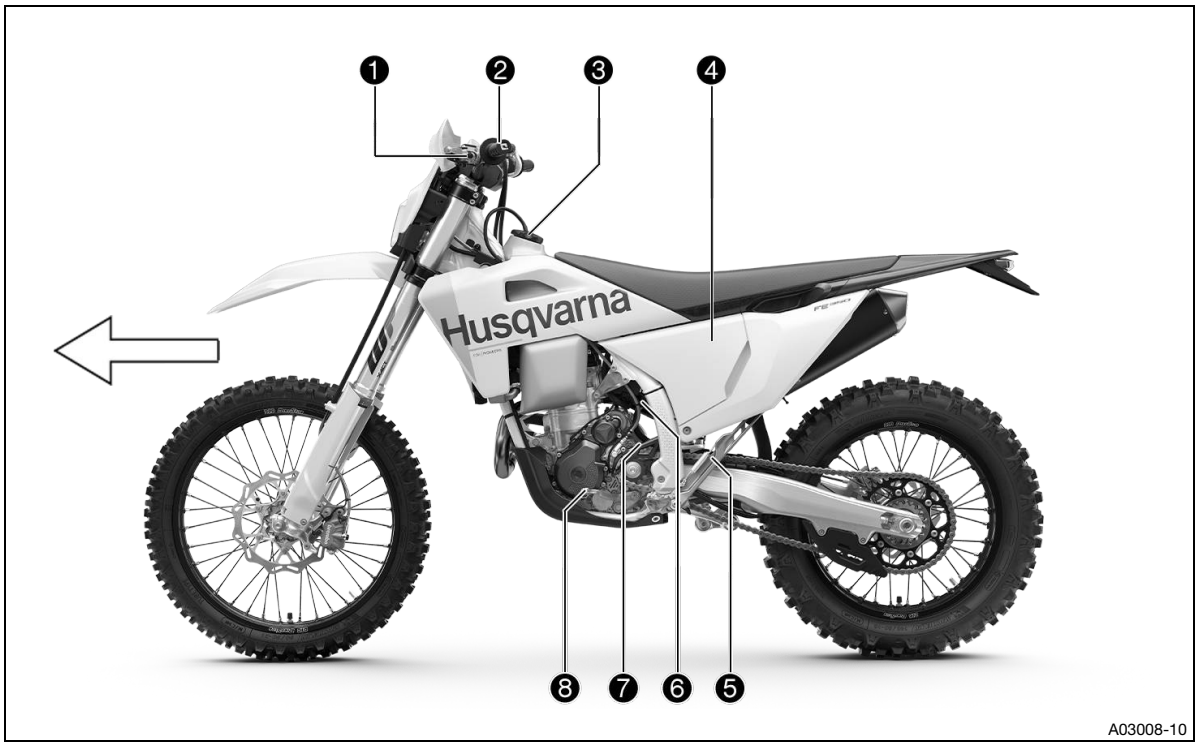

1. Clutch lever (p. 20)
2. Horn button (p. 20)
2. Light switch (p. 21)
2. Turn signal switch (p. 21)
3. Fuel tank cap
4. Air filter box cover
5. Side stand (p. 26)
6. Cold start button (p. 24)
7. Engine number (p. 18)
8. Gear shift lever (p. 25)

4.2 View of vehicle, right side (example)

Note
Arrow faces in the direction of forward travel.

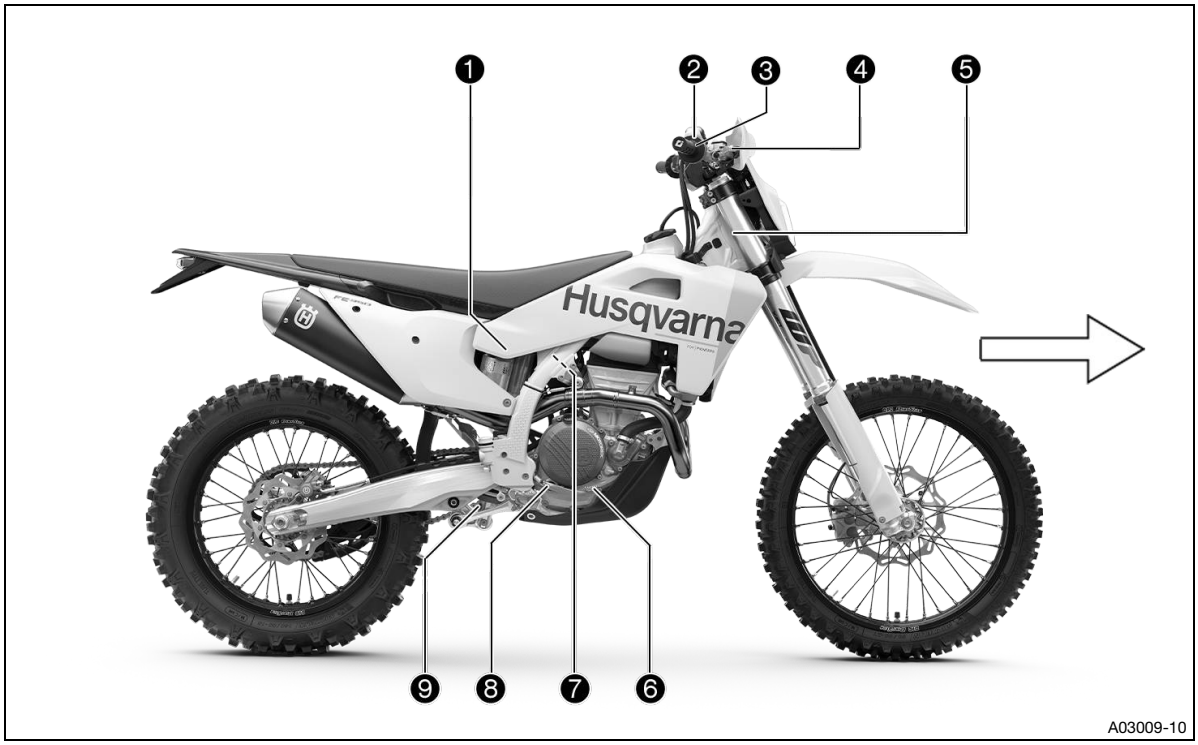

1. Shock absorber compression adjustment
2. Electric starter (p. 21)
3. Throttle grip (p. 20)
4. Handbrake lever (p. 20)
5. Vehicle identification number
6. Brake pedal (p. 26)
7. Idle speed adjustment screw (p. 25)
8. Level viewer, engine oil
9. Shock absorber rebound adjustment

5 Serial number

5.1 Vehicle identification number

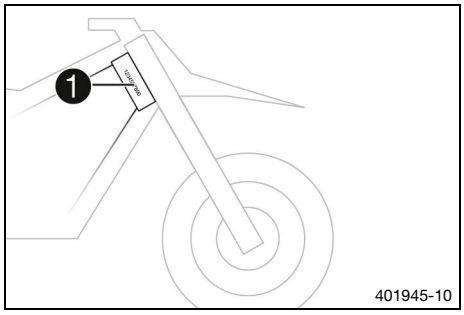

The vehicle identification number ❶ is stamped on the right-hand side of the steering head.

5.2 Type approval label

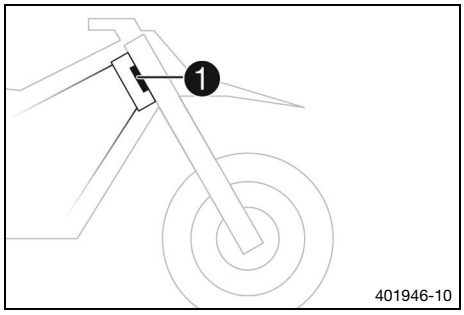

The type approval label ❶ is fixed to the front of the steering head.

5.3 Key number

(All EU models)

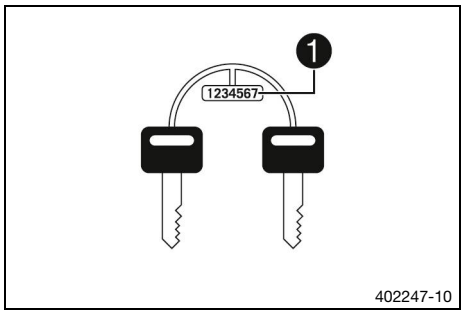

The key number ❶ for the steering lock is stamped onto the key connector.

5.4 Engine number

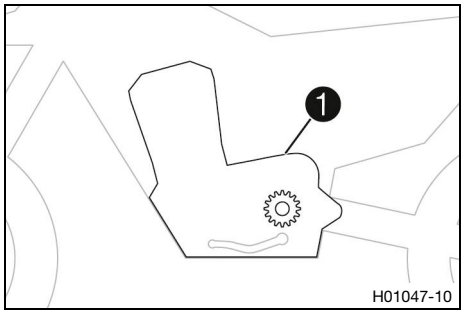

The engine number ❶ is stamped on the left side of the engine above the front sprocket.

5.5 Fork part number

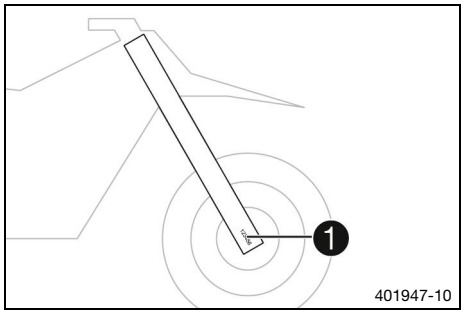

Fork part number ❶ is stamped on the inside of the fork shoe.

5.6 Shock absorber part number

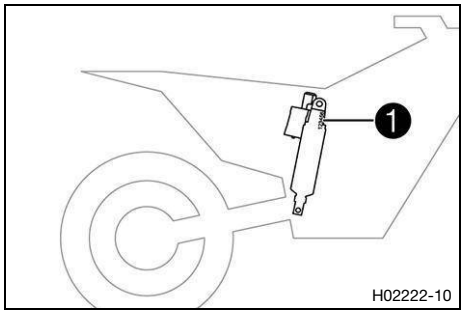

Shock absorber part number ❶ is stamped on the top right of the shock absorber.

6.1 Clutch lever

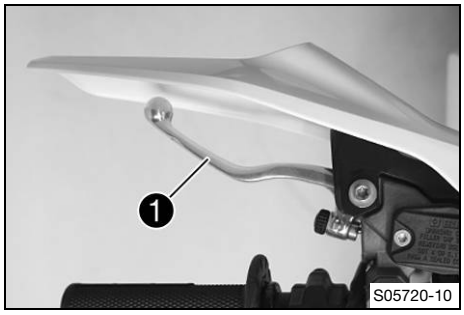

Clutch lever ❶ is fitted on the left side of the handlebar.
The clutch is activated hydraulically and adjusts itself automatically.

6.2 Handbrake lever

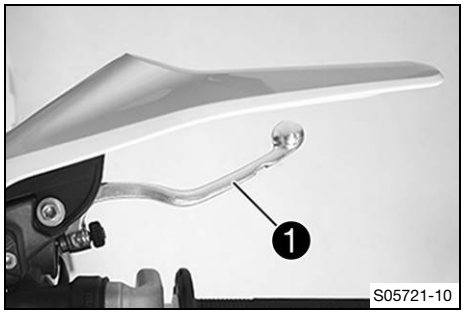

Hand brake lever ❶ is fitted on the right side of the handlebar.
The front brake is engaged using the hand brake lever.

6.3 Throttle grip

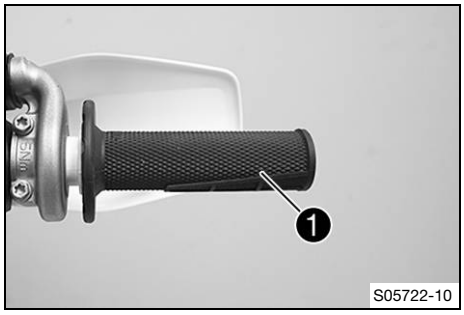

The throttle twist grip ❶ is fitted on the right side of the handlebar.

6.4 Horn button

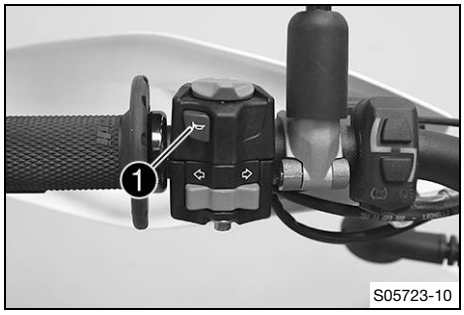

Horn button ❶ is fitted on the left side of the handlebar.

Condition	Meaning
Horn buttons in the basic position	No function
Horn button pressed.	The horn is operated in this position.

6.5 Light switch

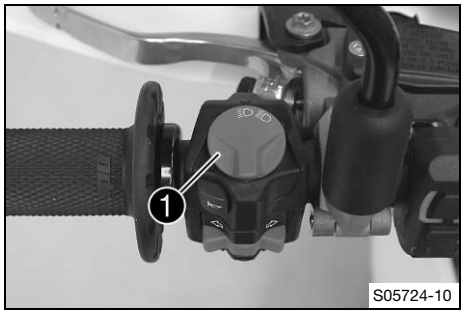

Light switch ❶ is fitted on the left side of the handlebar.

Condition		Meaning
	Light switch is in the central position.	In this position, the low beam and tail light are switched on.
	The light switch is turned counter-clockwise.	In this position, the high beam and the tail light are switched on.

6.6 Turn signal switch

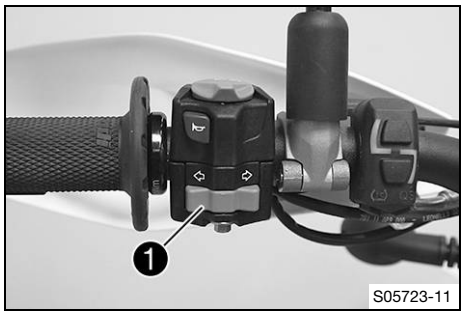

Turn signal switch ❶ is fitted on the left side of the handlebar.

Condition		Meaning
	Turn signal switch pressed to the left	Left turn signal, on
	Turn signal switch pressed to the right	Right turn signal, on

6.7 Passenger strap (All special models)

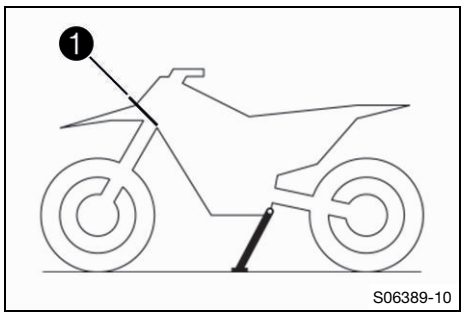

The passenger strap ❶ is located at the front of the vehicle.
Supporting strap ❶ is used for maneuvering the motorcycle.

6.8 Electric starter

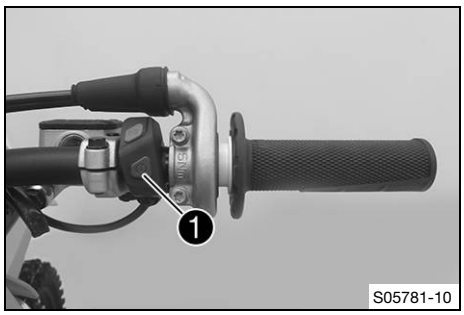

Electric starter ❶ is fitted on the right side of the handlebar.

Condition	Meaning
Electric starter in the basic position	No function
Electric starter pressed	In this position, the starter motor is actuated.

6.9 Kill switch

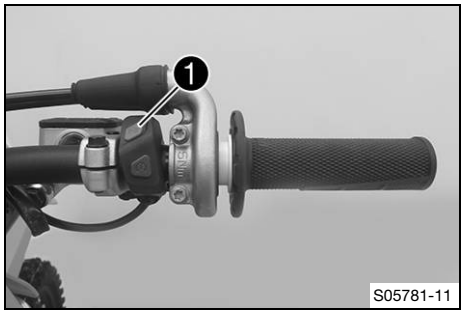

Kill switch ❶ is fitted on the right side of the handlebar.

Condition	Meaning
Kill button ⊗ is not pressed.	In this position, the ignition circuit is closed, and the engine can be started.
The kill button ⊗ is pressed and held.	In this position, the ignition circuit is interrupted, a running engine stops, and an engine at standstill will not start.

6.10 Combination switch

Note

If the combination switch is mounted, the vehicle's road permit, if any, expires.

The vehicle may only be operated in closed-off areas away from public road traffic if the combination switch is installed.

The traction control reduces excessive slip on the rear wheel in favor of more control and propulsion, particularly in wet conditions.

When traction control is switched off, the rear wheel may spin more during high acceleration and on surfaces with low grip.

Traction control can be switched on or off during the ride.

The setting most recently selected is activated again when restarting.

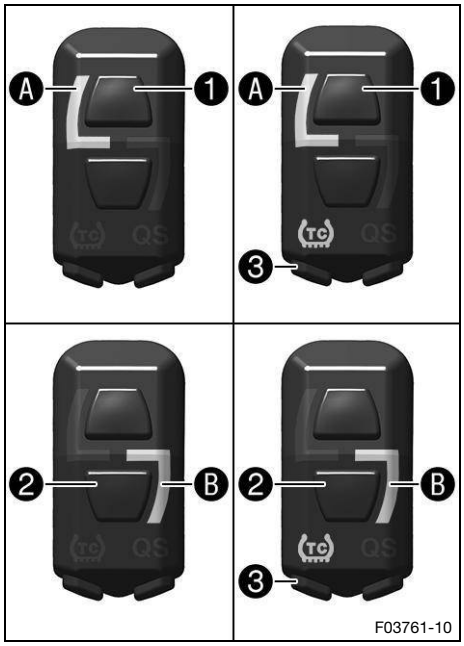

The combination switch is fitted on the left side of the handlebar.

The engine characteristic can be changed using button ❶ and button ❷ on the combination switch.

Traction control can be activated using the TC button ❸ on the combination switch.

The **quick shifter** can also be activated via the combination switch.

Condition	Meaning
STANDARD ❶	STANDARD mapping is activated when the indicator lamp Ⓐ lights up.
STANDARD ❶ with TC	STANDARD mapping with traction control is activated when the indicator lamp Ⓐ and the TC indicator lamp light up.
ADVANCED ❷	ADVANCED mapping is activated when the indicator lamp Ⓑ lights up.
ADVANCED ❷ with TC	ADVANCED mapping with traction control is activated when the indicator lamp Ⓑ and the TC indicator lamp light up.

6.11 Overview of indicator lights

Condition		Meaning
	The high beam indicator light lights up blue.	The high beam is switched on.
	Failure indicator light lights up/flashes yellow.	The **OBD** has detected an error in the vehicle electronics. Come safely to a halt, and contact an authorized dealer.
	Fuel level warning light lights up yellow.	The fuel level has reached the reserve mark.
	Turn signal indicator light flashes green.	The turn signal is switched on.

6.12 Opening the fuel tank cap

DANGER

Fire hazard Fuel is highly flammable.

The fuel in the fuel tank expands when warm and can escape if overfilled.

- Do not refuel the vehicle in the vicinity of open flames, glowing, or smoldering objects.
- Make sure that nobody smokes in the vicinity of the vehicle during the refueling process.
- Switch off the engine for refueling.
- Make sure that no fuel is spilled; particularly not on hot parts of the vehicle.
- If any fuel is spilled, wipe it up immediately.
- Do not overfill the fuel tank.

WARNING

Danger of poisoning Fuel is harmful to health.

- Do not allow fuel to come into contact with skin, eyes, or clothing.
- Consult a doctor immediately if fuel has been ingested.
- Do not inhale fuel vapors.
- Rinse the affected area immediately with plenty of water in the event of contact with skin.
- Rinse eyes thoroughly with water and consult a doctor immediately if fuel comes into contact with eyes.
- If fuel spills on to your clothing, change the clothing.
- Store fuel properly in a suitable container and keep out of the reach of children.

NOTE

Environmental hazard Improper handling of fuel is dangerous to the environment.

- Do not allow fuel to enter the groundwater, the soil, or the sewage system.

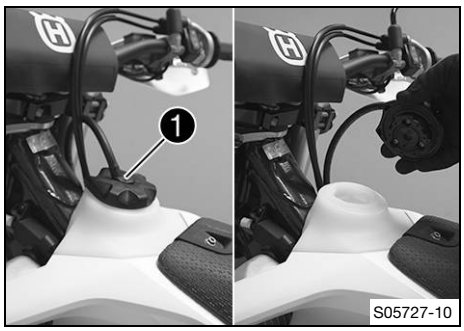

– Press release button ❶, turn the fuel tank cap counterclockwise, and lift it off.

6.13 Closing the fuel tank cap

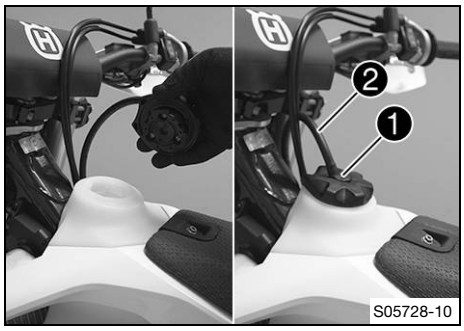

– Mount the fuel tank filler cap and turn it clockwise until release button ❶ engages.

Route hose of fuel tank vent ❷ without kinks.

6.14 Cold start button

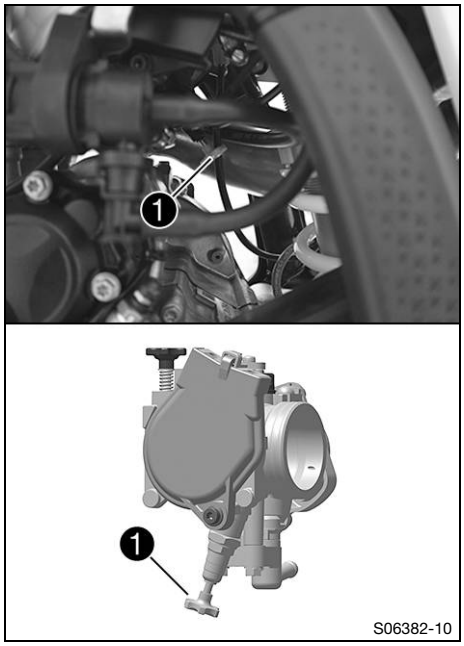

Cold start button ❶ is fitted to the bottom of the throttle body.

The electronic fuel injection extends the injection time when the engine is cold and the ambient temperature is low. To help the engine burn the increased amount of fuel, it must be supplied with additional oxygen by pushing the cold start button.

After briefly opening up the throttle and then releasing the throttle grip again, or turning the throttle grip towards the front, the cold start button returns to its original position.

Note

Check whether the cold start button has returned to its basic position.

Condition	Meaning
The cold start button is pushed in all the way to the stop.	Cold start button activated
The cold start button is in the basic position.	Cold start button deactivated

6.15 Idle speed adjustment screw

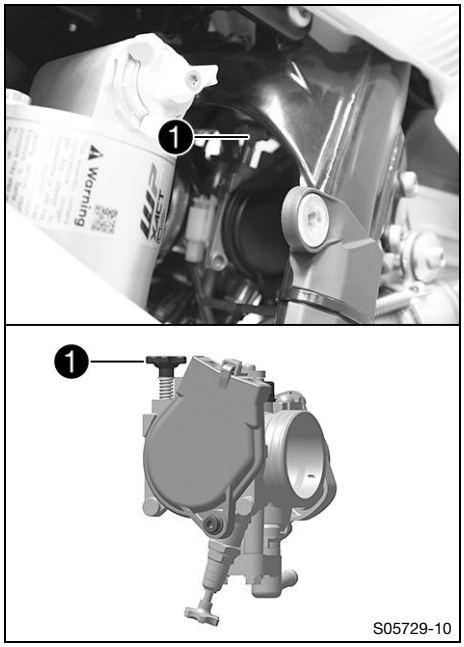

The idle setting of the throttle body substantially influences the vehicle's starting behavior, a stable idle speed, and the vehicle's response when the throttle is opened.

An engine with a correctly set idle speed is easier to start than an engine with the idle speed set incorrectly.

The idle speed is adjusted using idle speed adjustment screw ❶.

Increase the idle speed by turning the idle speed adjustment screw clockwise.

Decrease the idle speed by turning the idle speed adjustment screw counterclockwise.

6.16 Gear shift lever

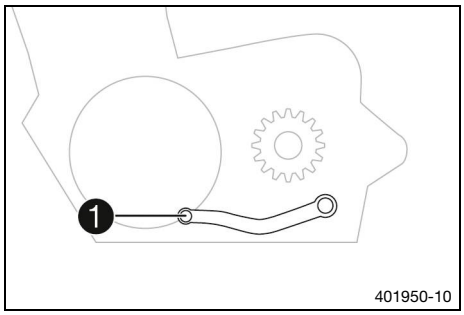

Gear shift lever ❶ is mounted on the left of the engine.

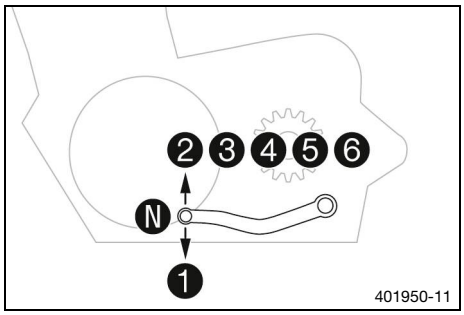

The gear positions can be seen in the figure.

The neutral or idle position is between the first and second gears.

6.17 Brake pedal

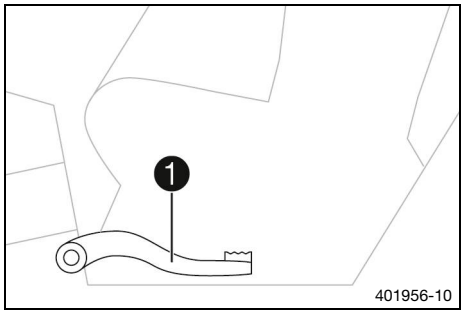

Brake pedal ❶ is located in front of the right footpeg.
The rear brake is operated with the brake pedal.

6.18 Side stand

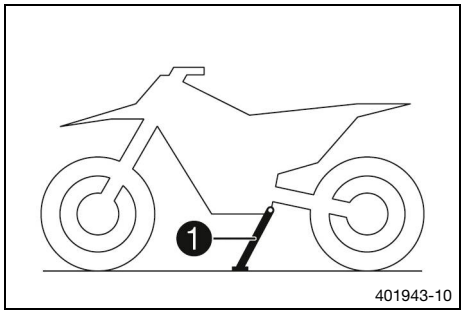

The side stand ❶ is attached to the left side of the vehicle.
The side stand is used for parking the motorcycle.

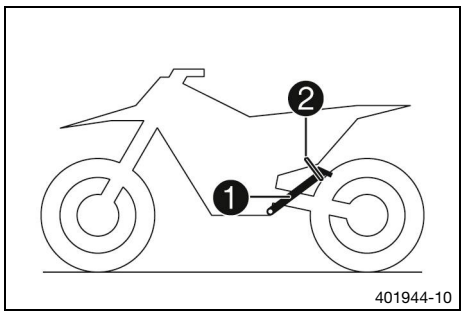

Note
When you are riding, side stand ❶ must be folded up and secured with rubber band ❷.

6.19 Steering lock (All EU models)

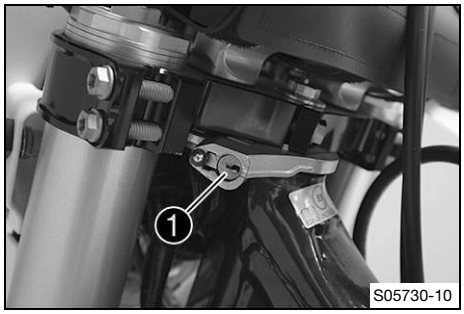

Steering lock ❶ is fitted on the left side of the steering head.
The steering lock is used to lock the steering. Steering and riding is then no longer possible.

6.20 Locking the steering (All EU models)

NOTE

Material damage The vehicle may be damaged if parked incorrectly.

Damage can occur if the vehicle rolls away or falls over.

The components for parking the vehicle are designed only for the weight of the vehicle.

– Park the vehicle on a firm and level surface.
– Make sure that nobody sits on the vehicle when it is parked on a stand.

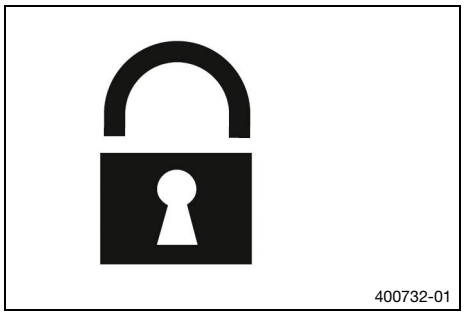

– Park the vehicle.
– Turn handlebar as far as possible to the right.
– Lubricate the steering lock regularly.

Universal oil spray (p. 175)

– Insert the key for the steering lock into the steering lock (p. 26), turn it to the left, press it in, turn it to the right and remove.

Never leave the key for the steering lock in the steering lock.

6.21 Unlocking the steering (All EU models)

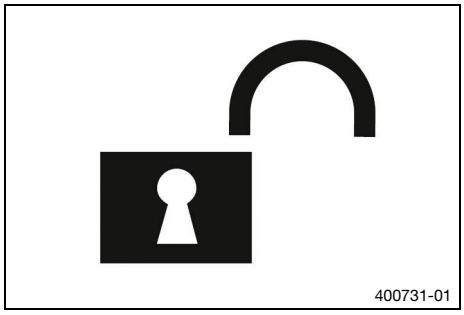

– Insert the key for the steering lock into the steering lock (p. 26), turn it to the left, pull it out, turn it to the right and remove.

Never leave the key for the steering lock in the steering lock.

✓ The handlebar can now be moved again.

7.1 Combination instrument overview

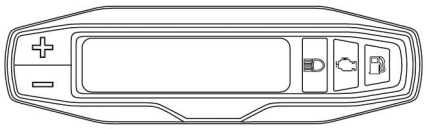

V00799-01

- Press the **button** + to control different functions.
- Press the **button** — to control different functions.

Note
In the condition at delivery, only the **SPEED/H** and **SPEED/ODO** display modes are activated.

7.2 activation and testing

7.2.1 Activating combination instrument

400313-01

The combination instrument is activated when one of the buttons is pressed or an impulse comes from the wheel speed sensor.

7.2.2 Display test

400313-01

To enable you to check that the display is functioning properly, all display segments light up briefly.

7.2.3 WS (wheel size)

400314-01

After the display function check, the wheel circumference **WS** is displayed briefly.

Note
The number 2205 equals the circumference of the 21" front wheel with standard tires.

The indicator then changes to the last selected mode.

7.3 Setting kilometers or miles

Note
If the unit is changed, value **ODO** is retained and converted accordingly.
The values **TR1**, **TR2**, **A1**, **A2** and **S1** are cleared when the unit of measure is changed.

Condition: Motorcycle is stationary

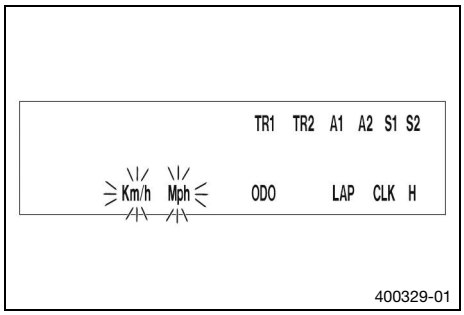

– Briefly and repeatedly press button + until indicator **H** appears in the bottom right of the display.
– Press button + for 2–3 seconds.
  ✓ The Setup menu is displayed and the active functions are shown.
– Press button + briefly until indicator **Km/h** / **Mph** flashes.

– Select one of the following alternatives.

Adjusting the Km/h
  – Press button +.

Adjusting the Mph
  – Press button —.

– Wait 3–5 seconds.
  ✓ The settings are stored.

Note
If no button is pressed for 10–20 seconds, or if an impulse comes from the wheel speed sensor, the settings are automatically saved and the setup menu is closed.

7.4 Setting the combination instrument

Note
In the condition at delivery, only the **SPEED/H** and **SPEED/ODO** display modes are activated.

Condition: Motorcycle is stationary

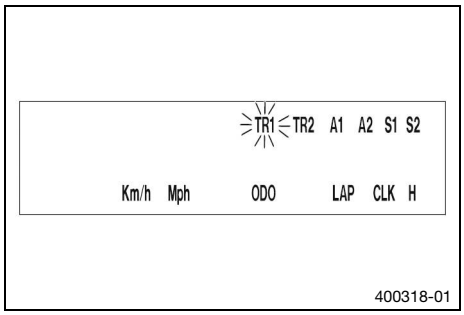

– Briefly and repeatedly press button + until indicator **H** appears in the bottom right of the display.
– Press button + for 2–3 seconds.
  ✓ The Setup menu is displayed and the active functions are shown.

Note
If no button is pressed for 10–20 seconds, the settings are automatically saved. If no button is pressed for 20 seconds, or if an impulse comes from the wheel speed sensor, the settings are automatically saved and the setup menu is closed.

– Press button + briefly until the desired function flashes.
  ✓ The selected function flashes.
– Select one of the following alternatives.

Activating the function
– Press button +.
  ✓ The symbol continues to appear in the display and the indicator switches to the next function.

Deactivating a function
– Press button —.
  ✓ The symbol disappears in the display and the indicator switches to the next function.

7.5 Setting the clock

Condition: Motorcycle is stationary

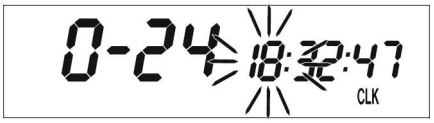

400330-01

– Briefly and repeatedly press button + until indicator **CLK** appears in the bottom right of the display.
– Press button + for 2–3 seconds.
  ✓ The hour display flashes.
– Adjust the hour display with the **button** + or **button** —.
– Wait 3–5 seconds.
  ✓ The next segment of the display flashes and can be set.
– You can set the following segments in the same way as the hours by pressing the **button** + and **button** —.

Note
The seconds can only be set to zero.
If no button is pressed for 10–20 seconds, or if an impulse comes from the wheel speed sensor, the settings are automatically saved and the setup menu is closed.

7.6 Viewing the lap time

Note
This function can only be opened if lap times have actually been timed.

Condition: Motorcycle is stationary

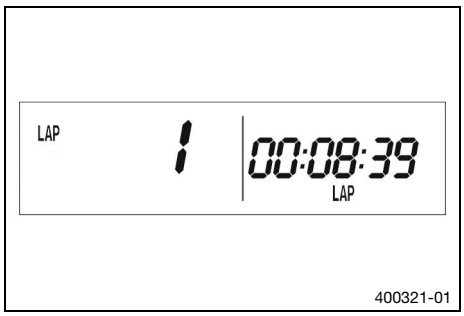

– Briefly and repeatedly press button + until indicator **LAP** appears in the bottom right of the display.
– Press button + briefly.
  ✓ **LAP 1** appears on the left side of the display.
– You can use the **button** — to view laps 1–10.
– Press and hold **button** + for 3–5 seconds.
  ✓ The lap times are deleted.
– Press button + briefly.
  ✓ Next display mode

Note
When an impulse is received from the wheel speed sensor, the left side of the display changes back to the **SPEED** mode.

7.7 Display mode SPEED (speed)

– Briefly and repeatedly press button + until indicator **SPEED** appears in the left of the display.

The current speed is displayed in the **SPEED** display mode.

The current speed can be displayed in **Km/h** or **Mph**.

Note
Make the setting according to the country.
When an impulse comes from the front wheel, the left side of the display changes to the **SPEED** mode and the current speed is shown.

7.8 Display mode SPEED/H (operating hours)

Condition: Motorcycle is stationary

– Briefly and repeatedly press button + until indicator **H** appears in the bottom right of the display.

In display mode **H**, the operating hours of the engine are displayed.

The operating hour counter stores the total traveling time.

Note
The operating hour counter is necessary for ensuring that service work is carried out at the right intervals.
If the combination instrument is in **H** display mode when starting off, it automatically changes to the **ODO** display mode.
The **H** display mode is suppressed during the journey.

– Press button + for 2–3 seconds.	The display changes to the functions setup menu.

– Press button + briefly.	Next display mode
– Press button — for 2–3 seconds.	No function
– Press button — briefly.	No function

7.9 Setup menu

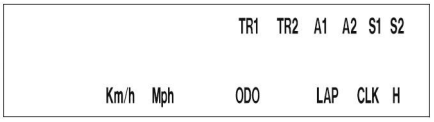

Condition: Motorcycle is stationary

– Briefly and repeatedly press button + until indicator **H** appears in the bottom right of the display.
– Press button + for 2–3 seconds.

The Setup menu displays the active functions.

Note

Repeatedly press the **button** + briefly until the desired function is reached.

If no button is pressed for 20 seconds, the settings are automatically saved.

– Press button + briefly.	Activates the flashing display and changes to the next display
– Press button + for 2–3 seconds.	No function
– Press button — briefly.	Deactivates the flashing display and changes to the next display
– Press button — for 2–3 seconds.	No function
– Wait 3–5 seconds.	Changes to the next display without changes
– Wait 10–12 seconds.	Setup menu starts, stores the settings, and changes to **H** or **ODO**.

7.10 Adjusting the unit of measurement

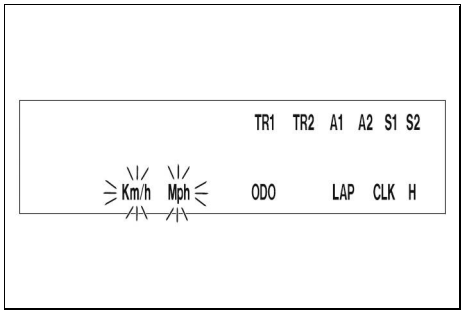

Condition: Motorcycle is stationary

– Press button + for 2–3 seconds.
– Briefly and repeatedly press button + until indicator **H** appears in the bottom right of the display.
– Press button + briefly until indicator **Km/h** / **Mph** flashes.

In measurement unit mode, you can change the unit of measurement.

Note
If no button is pressed for 5 seconds, the settings are automatically saved.

– Press button + briefly.	Starts selection, activates **Km/h** display
– Press button + for 2–3 seconds.	No function
– Press button — briefly.	Activates **Mph** display
– Press button — for 2–3 seconds.	No function
– Wait 3–5 seconds.	Changes to the next display, changes from selection to the Setup menu
– Wait 10–12 seconds.	Stores and closes the Setup menu.

7.11 Display mode SPEED/CLK (time)

– Briefly and repeatedly press button + until indicator **CLK** appears in the bottom right of the display.

The time is shown in display mode **CLK**.

– Press button + for 2–3 seconds.	The display changes to the Setup menu of the clock.
– Press button + briefly.	Next display mode
– Press button — for 2–3 seconds.	No function

– Press button — briefly.	No function

7.12 Setting the clock

Condition: Motorcycle is stationary

– Briefly and repeatedly press button + until indicator **CLK** appears in the bottom right of the display.
– Press button + for 2–3 seconds.

– Press button + for 2–3 seconds.	Increases the value
– Press button + briefly.	Increases the value
– Press button — for 2–3 seconds.	Reduces the value
– Press button — briefly.	Reduces the value
– Wait 3–5 seconds.	Changes to the next value
– Wait 10–12 seconds.	Exit the Setup menu

7.13 Display mode SPEED/LAP (lap time)

– Briefly and repeatedly press button + until indicator **LAP** appears in the bottom right of the display.

In the **LAP** display mode, up to 10 lap times can be timed with the stop watch.

Note

If the lap time continues running after the **button** — is pressed, 9 memory locations are filled.

Lap 10 must be timed with the **button** +.

– Press button + for 2–3 seconds.	The stop watch and the lap time are reset.
– Press button + briefly.	Next display mode
– Press button – for 2–3 seconds.	Stops the stop watch
– Press button – briefly.	Starts the stop watch or stops the current lap time measurement, stores it and the stop watch starts the next lap.

7.14 Viewing the lap time

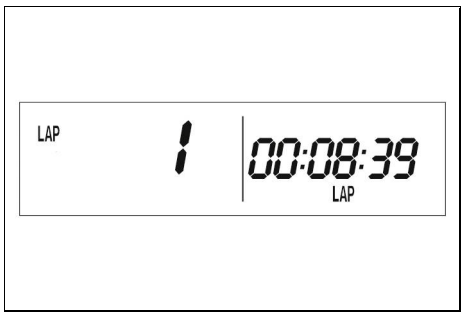

Condition: Motorcycle is stationary

– Briefly and repeatedly press button + until indicator **LAP** appears in the bottom right of the display.
– Press button + briefly.

– Press button + for 2–3 seconds.	The stop watch and the lap time are reset.
– Press button + briefly.	Select a lap from 1 – 10
– Press button – for 2–3 seconds.	No function
– Press button – briefly.	View the next lap time

7.15 Display mode SPEED/ODO (odometer)

– Briefly and repeatedly press button + until indicator **ODO** appears in the bottom right of the display.

The total traveled distance is shown in display mode **ODO**.

– Press button + for 2–3 seconds.	No function
– Press button + briefly.	Next display mode
– Press button – for 2–3 seconds.	No function

– Press button — briefly.	No function

7.16 Display mode SPEED/TR1 (trip master 1)

– Briefly and repeatedly press button + until indicator **TR1** appears in the top right of the display.

TR1 (trip master 1) runs constantly and counts up to 999.9.

You can use it to measure trips or the distance between refueling stops.

TR1 is coupled with **A1** (average speed 1) and **S1** (stop watch 1).

Note
If 999.9 is exceeded, the values of **TR1**, **A1** and **S1** are automatically reset to 0.0.

– Press button + for 2–3 seconds.	Displays of **TR1**, **A1** and **S1** are reset to 0.0.
– Press button + briefly.	Next display mode
– Press button — for 2–3 seconds.	No function
– Press button — briefly.	No function

7.17 Display mode SPEED/TR2 (trip master 2)

– Briefly and repeatedly press button + until indicator **TR2** appears in the top right of the display.

It **TR2** (trip master 2) runs constantly and counts up to 999.9.

– Press button + for 2–3 seconds.	The displays of **TR2** and **A2** are set to 0.0.
– Press button + briefly.	Next display mode

– Press button — for 2–3 seconds.	Reduces value **TR2**
– Press button — briefly.	Reduces value **TR2**

7.18 Adjusting TR2 (trip master 2)

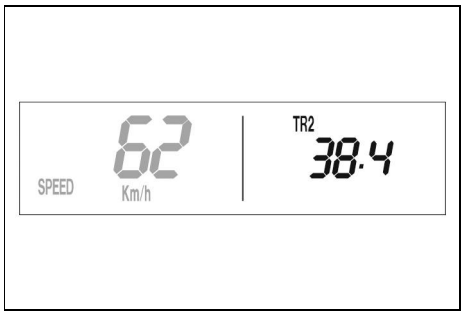

Condition: Motorcycle is stationary

– Briefly and repeatedly press button + until indicator **TR2** appears in the top right of the display.
– Press the **button** — for 2–3 seconds until **TR2** flashes.

The displayed value can be set manually with the **button** + and **button** —. This is a very practical function when riding using the road book.

Note
The value **TR2** can also be corrected manually during the journey using the **button** + and the **button** —.
If 999.9 is exceeded, the value of **TR2** is automatically reset to 0.0.

– Press button + for 2–3 seconds.	Increases value **TR2**
– Press button + briefly.	Increases value **TR2**
– Press button — for 2–3 seconds.	Reduces value **TR2**
– Press button — briefly.	Reduces value **TR2**
– Wait 10–12 seconds.	Stores and closes the Setup menu.

7.19 Display mode SPEED/A1 (average speed 1)

– Briefly and repeatedly press button + until indicator **A1** appears in the top right of the display.

A1 (average speed 1) shows the average speed calculated using **TR1** (trip master 1) and **S1** (stop watch 1).

The calculation of this value is activated by the first impulse of the wheel speed sensor and ends 3 seconds after the last impulse.

– Press button + for 2–3 seconds.	Displays of **TR1**, **A1** and **S1** are reset to 0.0.
– Press button + briefly.	Next display mode
– Press button — for 2–3 seconds.	No function
– Press button — briefly.	No function

7.20 Display mode SPEED/A2 (average speed 2)

– Briefly and repeatedly press button + until indicator **A2** appears in the top right of the display.

A2 (average speed 2) shows the average speed on the basis of the current speed if the stop watch **S2** (stop watch 2) is running.

Note
The displayed value can differ from the actual average speed if **S2** was not stopped after the ride.

– Press button + briefly.	Next display mode
– Press button + for 2–3 seconds.	No function
– Press button — for 2–3 seconds.	No function
– Press button — briefly.	No function

7.21 Display mode SPEED/S1 (stop watch 1)

– Briefly and repeatedly press button + until indicator **S1** appears in the top right of the display.

S1 (Stop watch 1) shows the riding time based on **TR1** and continues running as soon as an impulse arrives from the wheel speed sensor.

The calculation of this value starts with the first impulse from the wheel speed sensor and ends 3 seconds after the last impulse.

– Press button + for 2–3 seconds.	Displays of **TR1**, **A1** and **S1** are reset to 0.0.
– Press button + briefly.	Next display mode
– Press button — for 2–3 seconds.	No function
– Press button — briefly.	No function

7.22 Display mode SPEED/S2 (stop watch 2)

– Briefly and repeatedly press button + until indicator **S2** appears in the top right of the display.

S2 (Stop watch 2) is a manual stop watch.

If **S2** is running in the background, indicator **S2** in the display flashes.

– Press button + for 2–3 seconds.	The displays of **S2** and **A2** are set to 0,0.
– Press button + briefly.	Next display mode
– Press button — for 2–3 seconds.	No function
– Press button — briefly.	Starts or stops **S2**

8.1 Notes on preparing for first use

DANGER
Danger of accidents A rider who is not fit to ride poses a danger to themself and to others.
– Do not operate the vehicle if you are not fit to ride due to alcohol, drugs, or medication.
– Do not operate the vehicle if you are physically or mentally incapable of doing so.

WARNING
Danger of accidents The vehicle is not designed to carry passengers.
– Do not ride with a passenger.

WARNING
Danger of accidents The brake system fails in the event of overheating.
If the brake pedal is not released, the brake pads grind continuously.
– Take your foot off the brake pedal when you are not braking.

WARNING
Danger of accidents Not adapting the riding style constitutes a major risk.
– Adapt the vehicle speed to the road conditions and your riding ability.

WARNING
Danger of accidents Total weight and axle loads influence the handling characteristic.
– Do not exceed the maximum permissible total weight or the axle loads.

WARNING
Risk of injury People who act without authorization endanger themselves and others.
– Never leave the vehicle unattended while the engine is running.
– Secure the vehicle against unauthorized access.

WARNING
Danger of accidents Different tire profiles on the front and rear wheels can make it more difficult to control the vehicle.
– Make sure that only tires of the same tread type are mounted to the front and rear wheel.

WARNING
Risk of injury Missing or inadequate protective clothing increases the risk of injury.
– Wear appropriate protective clothing such as helmet, boots, gloves as well as pants and a jacket with protectors on all rides.
– Always wear protective clothing that is in good condition and meets the legal regulations.

Note
When using the vehicle, remember that others may feel disturbed by excessive noise.

– Ensure that the pre-delivery inspection has been carried out by an authorized contractual partner.
  ✓ The delivery certificate is transferred upon vehicle handover.
– Read the entire owner's manual before riding for the first time.
– Get to know the controls.
– Adjust the free travel of the handbrake lever. (p. 100)
– Adjust the basic position of the clutch lever. (p. 97)
– Adjust the basic position of the brake pedal. (p. 106)
– Adjust the basic position of the gear shift lever. (p. 140)

– Get used to the handling characteristics of the motorcycle on suitable terrain before undertaking a more challenging ride.

Tip
When off-road, it is recommended that you be accompanied by another person with another vehicle so that you can help each other.

– Also, ride as slowly as possible and in a standing position to get a better feel for the motorcycle.
– Do not make any off-road trips that exceed your ability and experience.
– Hold the handlebar firmly with both hands and keep your feet on the footpegs when riding.
– If luggage is carried, ensure it is fixed firmly as close as possible to the center of the vehicle and ensure even weight distribution between the front and rear wheels.

Note
Motorcycles react sensitively to any changes of weight distribution.

– The maximum permissible total weight and the maximum permissible axle loads must not be exceeded.

Maximum permissible total weight	335 kg (738.5 lb)
Maximum permissible front axle load	145 kg (319.7 lb)
Maximum permissible rear axle load	190 kg (418.9 lb)

– Check the spoke tension. (p. 117)

The spoke tension must be checked after half an hour of operation.

– Run in the engine. (p. 41)

8.2 Running in the engine

– Do not exceed the specified engine speed and load during the running-in time.

Maximum engine speed	
During the first operating hour	7,000 rpm (116.67 Hz)

Maximum engine power	
during the first 3 operating hours	≤ 75 %

Avoid fully opening the throttle.

8.3 Starting performance of lithium-ion batteries at low temperatures

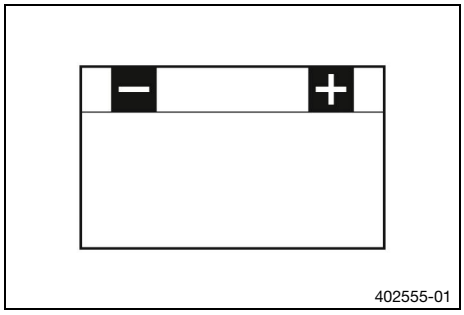

Lithium-ion batteries are far lighter than lead batteries, have a low self-discharge rate, and have more starting power at temperatures over 6 °C (43 °F).

Several attempts to start may be required. Press the start button for 5 seconds, and wait 15 seconds between attempts. At low temperatures, wait for 30 seconds. The pauses are necessary so that the heat created can be distributed through the lithium-ion battery without damaging the lithium-ion battery.

The starting power increases as the battery warms up.

Always make sure the lithium-ion battery is charged to that there is enough power to spare for starting at low temperatures.

After 6 unsuccessful starting attempts, do not try again, and check the vehicle for other faults instead.

8.4 Preparing the vehicle for difficult operating conditions

Note

Use of the vehicle under difficult conditions, such as on sand or on wet and muddy surfaces, can result in significantly increased wear of components, such as the drive train, brake system, or suspension components. For this reason, it may be necessary to inspect or replace parts before the next scheduled service interval.

– Clean the air filter and air filter box. (p. 81)

Check the air filter approx. every 30 minutes.

– Check the connector for humidity and corrosion and to ensure it is firmly seated.
  » If moisture, corrosion, or damage is found:
    – Clean and dry the socket connector, or change it if necessary.
– Riding on dry sand. (p. 42)
– Riding on wet sand. (p. 43)
– Rides on wet and muddy surfaces. (p. 43)
– Riding at high temperatures or slow speed. (p. 44)
– Riding at low temperatures and in snow. (p. 44)

8.5 Preparing the vehicle for rides on dry sand

102136-01

– Mount the air filter dust protection.

Read the accompanying mounting instructions.

Air filter dust protection cover (A46006920000)

102138-01

– Mount the air filter sand protection.

Read the accompanying mounting instructions.

Air filter sand protection (A46006922000)

600868-01

– Clean the chain.

Chain cleaner (p. 178)

– Mount the steel sprocket.
– Grease the chain.

Universal oil spray (p. 175)

– Clean the radiator fins.
– Straighten the bent radiator fins carefully.

8.6 Preparing the vehicle for rides on wet sand

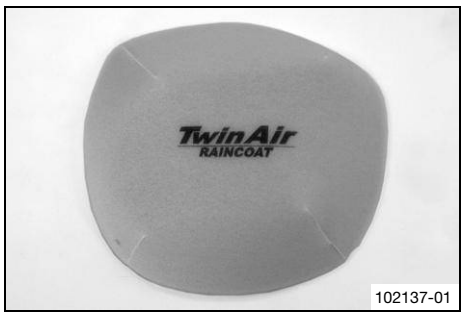

102137-01

– Mount the air filter water protection.

Observe the enclosed mounting instructions.

Air filter water protection (A46006921000)

600868-01

– Clean the chain.

Chain cleaner (p. 178)

– Mount the steel sprocket.
– Grease the chain.

Universal oil spray (p. 175)

– Clean the radiator fins.
– Straighten the bent radiator fins carefully.

8.7 Preparing for rides on wet and muddy surfaces

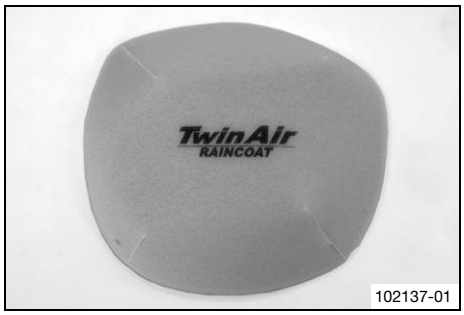

102137-01

– Mount the air filter water protection.

Read the accompanying mounting instructions.

Air filter water protection (A46006921000)

600868-01

– Mount the steel sprocket.
– Clean the motorcycle. (p. 148)
– Straighten the bent radiator fins carefully.

8.8 Preparing vehicle for rides at high temperature or slow speed

600868-01

– Adjust the secondary transmission to the road conditions.

Note
The engine oil heats up quickly when the clutch is operated frequently due to an excessively high secondary ratio.

– Clean the chain. (p. 89)
– Clean the radiator fins.
– Straighten the bent radiator fins carefully.
– Check the coolant level. (p. 131)

8.9 Preparing the vehicle for low temperatures or snow

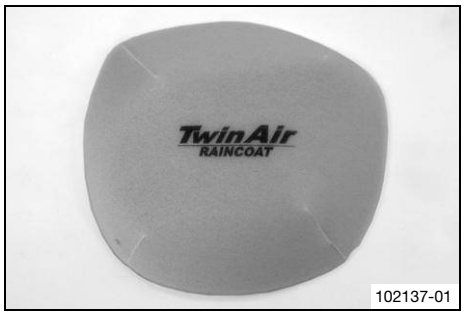

102137-01

– Mount the air filter water protection.

Read the accompanying mounting instructions.

Air filter water protection (A46006921000)

9.1 Checks and maintenance measures when preparing for use

Note
Before every trip, check the condition of the vehicle and ensure that it is safe to operate.
The vehicle must be in perfect technical condition when it is being operated.

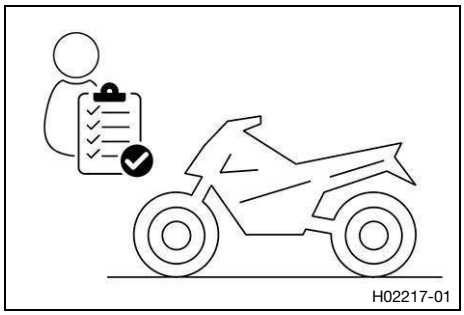

- Check the engine oil level. (p. 143)
- Check the electrical system.
- Check the brake fluid level for the front brake. (p. 101)
- Check the brake fluid level for the rear brake. (p. 107)
- Check that the brake pads of the front brake are secured. (p. 103)
- Check that the brake pads of the rear brake are secured. (p. 109)
- Check that the brake system is functioning properly.
- Check the coolant level. (p. 131)
- Check the chain for dirt. (p. 89)
- Check the chain, rear sprocket, engine sprocket, and chain guide. (p. 92)
- Check the chain tension. (p. 90)
- Check the tire condition. (p. 116)
- Check the tire pressure. (p. 117)

Condition: Offroad use

- Make sure that the rim locks are installed.
- Check the spoke tension. (p. 117)

  The spoke tension must be checked regularly as incorrect spoke tension will severely impair riding safety.
- Clean the dust boots of the fork legs. (p. 65)
- Bleed the fork legs. (p. 64)
- Check the air filter.
- Check the settings of all controls and ensure that they can be operated smoothly.
- Check all screws, nuts, and hose clamps regularly for tightness.
- Check the fuel level.

9.2 Starting the vehicle

DANGER
Danger of poisoning Exhaust gases are toxic and inhaling them may result in unconsciousness and death.
- Always ensure that there is sufficient ventilation when running the engine.
- Use suitable exhaust extraction when starting or running the engine in an enclosed space.

NOTE
Engine failure Running a cold engine at high engine speeds negatively impacts the service life of the engine.
- Always warm up the engine at low engine speeds.

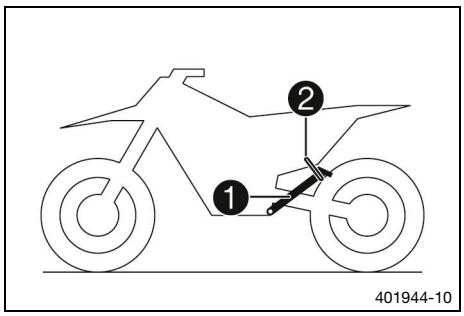

– Take the motorcycle off side stand ❶ and secure the side stand with rubber band ❷.
– Shift the transmission into the neutral position.
– Turn the ignition key in the ignition lock to position ◯.

Condition: Ambient temperature: < 20 °C (< 68.0 °F)

– Press the cold start button in all the way to the stop.

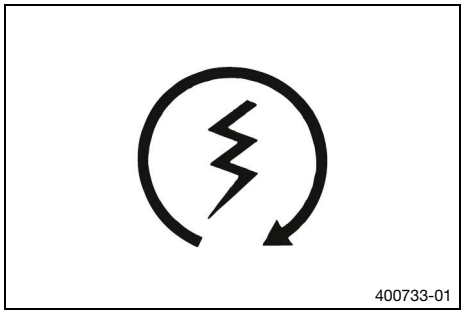

– Press the electric starter.

Press the electric starter for a maximum of 5 seconds.
Wait for 30 seconds before a further attempt at starting.

Note

At temperatures below 6 °C (43 °F), several attempts at starting may be necessary to warm-up the lithium-ion battery and thereby increase the starting power.

The malfunction indicator light lights up during the starting process.

9.3 Activating traction control

Note

If the combination switch is mounted, the vehicle's road permit, if any, expires.

The vehicle may only be operated in closed-off areas away from public road traffic if the combination switch is installed.

The traction control reduces excessive slip on the rear wheel in favor of more control and propulsion, particularly in wet conditions.

When traction control is switched off, the rear wheel may spin more during high acceleration and on surfaces with low grip.

Traction control can be switched on or off during the ride.

The setting most recently selected is activated again when restarting.

– Press the TC button ❶ to switch traction control on or off.

Engine speed	≤ 4,000 rpm (≤ 66.67 Hz)

✓ The TC indicator lamp lights up when traction control is activated.

9.4 Starting off

Note
When you are riding, the side stand must be folded up and secured with the rubber band.

– Pull the clutch lever, shift into first gear, release the clutch lever slowly and at the same time carefully open the throttle.

9.5 Quickshifter

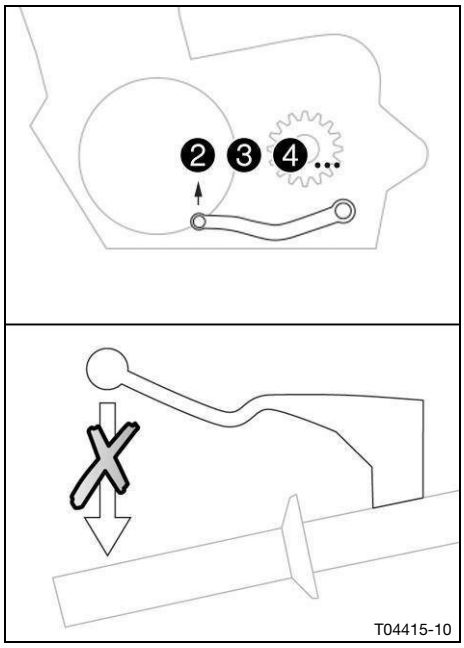

When the **quickshifter** is activated, you can shift up without actuating the clutch.

Note
The quickshifter is not activated when shifting up from first to second gear, and the clutch lever must be used when shifting up instead.
Even if the quickshifter is activated, you need to use the clutch lever to shift down.

Because there is no need to close the throttle grip, uninterrupted gear shifts are possible.
The quickshifter uses the shifter shaft position to check whether or not a shift should be initiated, and sends a corresponding signal to the engine control.
If the quickshifter is deactivated, the clutch needs to be actuated in the normal way for each shift.

9.6 Activate the quickshifter

– Press the QS button 1 to switch the quickshifter on or off.
✓ The QS indicator lamp lights up when the quickshifter is activated.

Note
The quickshifter is not activated when shifting up from first to second gear, and the clutch lever must be used when shifting up instead.
Even if the quickshifter is activated, you need to use the clutch lever to shift down.

9.7 Shifting, riding

WARNING
Danger of accidents If you downshift at high engine speed, the rear wheel blocks and the engine races.
– Do not downshift to a lower gear at high engine speeds.

Note
If you hear unusual noises while riding, stop immediately, switch off the engine, and contact an authorized contractual partner.
First gear is used for starting off or for steep inclines.

– Shift into a higher gear when conditions allow (incline, riding situation, etc.). To do so, release the throttle while simultaneously pulling the clutch lever, shift into the next gear, release the clutch lever and open the throttle.
– After reaching maximum speed by fully opening the throttle twist grip, turn the throttle back so that it is ¾ open. This will reduce the speed slightly, but the fuel consumption will be considerably lower.
– Only open the throttle as much as the engine can handle. Abruptly opening the throttle increases fuel consumption.
– To shift down, apply the brakes and close the throttle at the same time.
– Pull the clutch lever and shift into a lower gear, release the clutch lever slowly, and either open the throttle or shift again.
– Switch off the engine if you are likely to be running at idle speed or stationary for a long time.

≥ 2 min

– Avoid frequent and lengthy slipping of the clutch. This causes the engine oil, engine and cooling system to heat up.
– Ride at a low engine speed instead of at a high engine speed when riding the clutch.

9.8 Braking

WARNING
Danger of accidents A spongy pressure point on the front or rear brake reduces the brake action.
– Do not drive the vehicle if the brake system has a spongy pressure point.

WARNING
Danger of accidents Braking with excessive force locks the wheels.
– Adapt your braking to the riding situation and the road conditions.

WARNING
Danger of accidents Moisture and dirt impair the brake system.
– Brake carefully several times to dry out and remove dirt from the brake pads and the brake discs.

– On sandy, wet, or slippery surfaces, use the rear brake.
– Always finish braking before you go into a bend. Shift into a lower gear that suits the speed.
– Use the brake action of the engine on long downhill stretches. To do so, shift back one or two gears, but do not overrev the engine. This means that significantly less braking is required and means the brake system does not overheat.

9.9 Stop, park

WARNING
Danger of burns Some vehicle components become hot when the vehicle is operated.
– Do not touch any parts such as the exhaust system, radiator, engine, damper, or brake system before the vehicle parts have cooled down.
– Allow the vehicle parts to cool down before performing any work on the vehicle.

WARNING
Risk of injury People who act without authorization endanger themselves and others.
– Never leave the vehicle unattended while the engine is running.
– Secure the vehicle against unauthorized access.

NOTE
Fire hazard Hot vehicle components pose a fire hazard and explosion risk.
– Do not park the vehicle near materials which are highly flammable or explosive.
– Allow the vehicle to cool down before covering it.

NOTE
Material damage The vehicle may be damaged if parked incorrectly.
Damage can occur if the vehicle rolls away or falls over.
The components for parking the vehicle are designed only for the weight of the vehicle.
– Park the vehicle on a firm and level surface.
– Make sure that nobody sits on the vehicle when it is parked on a stand.

– Brake the motorcycle.
– Shift the transmission into the neutral position.
– Press kill switch when the engine is at idle speed until the engine stops.
– Park the motorcycle on firm ground.

9.10 Transportation

NOTE
Fire hazard Hot vehicle components pose a fire hazard and explosion risk.
– Do not park the vehicle near materials which are highly flammable or explosive.
– Allow the vehicle to cool down before covering it.

NOTE
Material damage The vehicle may be damaged if parked incorrectly.
Damage can occur if the vehicle rolls away or falls over.
The components for parking the vehicle are designed only for the weight of the vehicle.
– Park the vehicle on a firm and level surface.
– Make sure that nobody sits on the vehicle when it is parked on a stand.

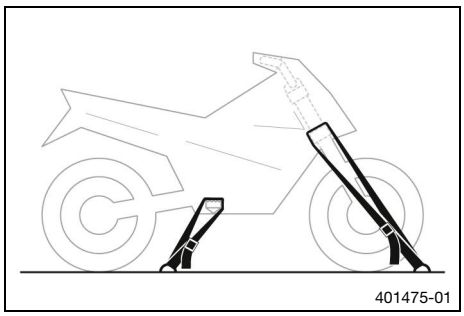

– Switch off the engine.
– Use tension belts or other suitable devices to secure the motorcycle against falling over or rolling away.

9.11 Refueling

DANGER
Fire hazard Fuel is highly flammable.
The fuel in the fuel tank expands when warm and can escape if overfilled.
– Do not refuel the vehicle in the vicinity of open flames, glowing, or smoldering objects.
– Make sure that nobody smokes in the vicinity of the vehicle during the refueling process.
– Switch off the engine for refueling.
– Make sure that no fuel is spilled; particularly not on hot parts of the vehicle.
– If any fuel is spilled, wipe it up immediately.
– Do not overfill the fuel tank.

WARNING
Danger of poisoning Fuel is harmful to health.
– Do not allow fuel to come into contact with skin, eyes, or clothing.
– Consult a doctor immediately if fuel has been ingested.
– Do not inhale fuel vapors.
– Rinse the affected area immediately with plenty of water in the event of contact with skin.
– Rinse eyes thoroughly with water and consult a doctor immediately if fuel comes into contact with eyes.
– If fuel spills on to your clothing, change the clothing.
– Store fuel properly in a suitable container and keep out of the reach of children.

NOTE
Material damage Inadequate fuel quality can lead to losses in performance and consequential damage.
– Refuel only with clean fuel that meets the specified standards.

NOTE
Environmental hazard Improper handling of fuel is dangerous to the environment.
– Do not allow fuel to enter the groundwater, the soil, or the sewage system.

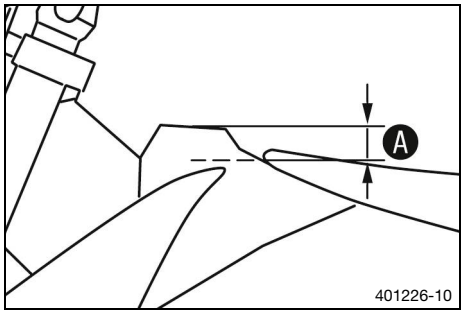

– Switch off the engine.
– Open the fuel tank cap. (p. 23)
– Fill the fuel tank with fuel no higher than A.

Level A	35 mm (1.38 in)

Total fuel tank capacity, approx.	
(All EU models) Super unleaded (ROZ 95) (p. 174)	8.0 l (2.11 liq. gal_{US})
(BR models) Super unleaded, type C (ROZ 95/RON 95/PON 91) (p. 174)	

– Close the fuel tank cap. (p. 24)

10.1 Service schedule

Any further work that results from the service work must be ordered separately and invoiced separately.
Different service intervals may apply in your country, depending on the local operating conditions.
Individual service intervals and scopes may change in the course of technical developments. The most up-to-date service schedule is available for authorized contractual partners for the electronic proof of service. Your authorized contractual partner will be happy to advise you.

	After one operating hour	Every 15 operating hours	Every 45 operating hours	Every 90 operating hours	Every 24 months
Read out the fault memory using the diagnostics tool.	○	●	●	●	●
Program the gear position sensor.		●	●	●	
Check that the electrical equipment is functioning properly.	○	●	●	●	
Check and charge the 12 V battery.		●	●	●	●
Check that the brake pads of the front brake are secured. (p. 103)		●	●	●	●
Check that the brake pads of the rear brake are secured. (p. 109)		●	●	●	●
Check the brake discs. (p. 100)		●	●	●	●
Check the brake lines for damage and tightness.		●	●	●	●
Check the brake fluid level for the front brake. (p. 101)		●	●		
Change the brake fluid for the front brake.				●	●
Check the brake fluid level for the rear brake. (p. 107)		●	●		
Change the brake fluid for the rear brake.				●	●
Check/correct the fluid level of the hydraulic clutch. (p. 96)			●		
Change the hydraulic clutch fluid. (p. 97)				●	●
Check the free travel on the hand brake lever. (p. 100)	○	●	●	●	●
Check the free travel of the brake pedal. (p. 106)		●	●	●	●
Check the idle speed.	○	●	●	●	●
Change the engine oil and the oil filter, clean the oil screens. (p. 144)	○	●	●	●	●
Check all hoses (e.g. fuel, cooling, bleeder, drainage, etc.) and boots for cracking, leaks, and correct routing.	○	●	●	●	●
Check the cables for damage and that there are no kinks in the routing.		●	●	●	●
Check that the clutch cables are undamaged, routed without kinks, and set correctly.		●	●	●	
Check the frame. (p. 94)		●	●	●	
Check the swingarm. (p. 94)		●	●	●	
Check the swingarm bearing for play.			●	●	
Check the heim joint on the shock absorber for play.			●	●	
Check the shock absorber linkage.		●	●	●	
Check the tire condition. (p. 116)		●	●	●	●
Check the tire pressure. (p. 117)		●	●	●	●
Check the wheel bearing for play.		●	●	●	

	After one operating hour	Every 15 operating hours	Every 45 operating hours	Every 90 operating hours	Every 24 months
Check the hubs.		●	●	●	
Check the rim run-out.	○	●	●	●	
Check the spoke tension. (p. 117)	○	●	●	●	
Check the chain, rear sprocket, engine sprocket, and chain guide. (p. 92)	○	●	●	●	
Check the chain tension. (p. 90)	○	●	●	●	●
Grease all moving parts (e.g. side stand, hand lever, chain, etc.) and check for smooth operation.	○	●	●	●	●
Check the valve clearance.	○		●	●	
Change the fuel filter.				●	●
Check the clutch.			●	●	
Clean the air filter and air filter box. (p. 81)		●	●	●	●
Check the funnel in the inlet sleeve in the air filter box.		●	●	●	●
Change the damping material on the main silencer. (p. 85)			●	●	
Carry out fork service.			●	●	
Service the shock absorber.			●	●	
Check all screws, nuts, and hose clamps for a tight fit.	○	●	●	●	●
Change the fuel screen. (p. 142)	○	●	●	●	●
Check the fuel pressure.	○		●	●	●
Check the frost protection and coolant level. (p. 130)			●	●	
Check the coolant level. (p. 131)	○	●			
Change the coolant. (p. 133)					●
Check that the radiator fan is functioning properly.	○	●	●	●	
Check the steering head bearing play. (p. 73)	○	●			
Lubricate the steering head bearing. (p. 74)			●	●	●
Check the headlight setting. (p. 126)		●	●	●	
Perform engine service including removing and installing the engine. (Change the spark plug and spark plug connector. Change the piston. Check/measure the cylinder. Check the cylinder head. Change the valves, valve springs, valve spring retainers and valve spring seats. Check the camshaft and cam lever. Change the connecting rod, conrod bearing and crank pin. Check the transmission and shift mechanism. Check the oil pressure control valve. Change the suction pump. Check the force pump and lubrication system. Check the timing assembly. Change the timing chain. Change all engine bearings and all gaskets. Change the freewheel.)				●	
Final check: Check the vehicle is roadworthy and take a test ride.	○	●	●	●	●
Read out the fault memory after the test ride using the diagnostics tool.	○	●	●	●	●
Enter the electronic proof of service in the contractual partner portal.	○	●	●	●	●

○ One-time interval

● Periodic interval

11.1 Checking the basic chassis setting with the rider's weight

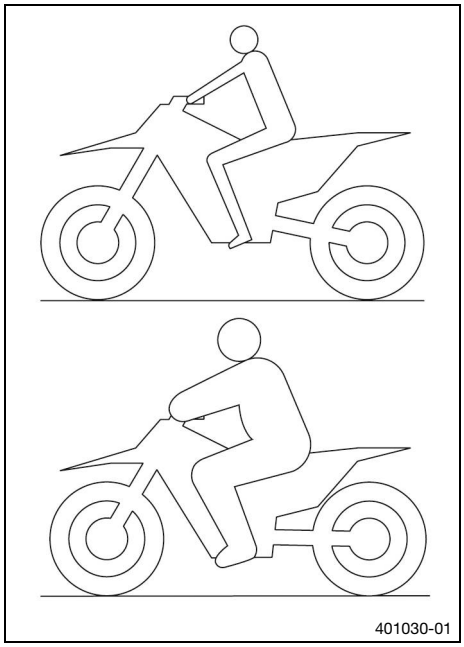

- When adjusting the basic chassis setting, first adjust the shock absorber and then the fork.
- For optimal motorcycle riding characteristics and to avoid damage to forks, shock absorbers, swingarm, and frame, the basic settings of the suspension components must match the rider's weight.
- On delivery, Husqvarna Mobility offroad motorcycles are adjusted for an average rider's weight (with full protective clothing).

Standard rider weight	75 kg … 85 kg (165.3 lb … 187.4 lb)

- If the rider's weight is above or below this range, the basic setting of the suspension components must be adjusted accordingly.
- Small weight differences can be compensated for by adjusting the preload, but in the case of large weight differences, the springs must be replaced.

11.2 Compression damping of the shock absorber

The compression damping of the shock absorber is divided into two ranges: high-speed and low-speed.

High-speed and low-speed refer to the compression speed of the rear wheel suspension and not to the vehicle speed.

The high-speed compression has an effect, for example, when landing after a jump: the rear wheel suspension compresses quickly.

The low-speed compression has an effect, for example, when riding over long bumps: the rear wheel suspension compresses slowly.

These two ranges can be adjusted separately, although the transition between high-speed and low-speed is floating. As a result, changes in the high-speed range affect the compression damping in the low-speed range and vice versa.

11.3 Adjusting the low-speed compression damping of the shock absorber

CAUTION

Risk of injury Parts of the shock absorber will move erratically if the shock absorber is detached incorrectly.

The shock absorber is filled with highly compressed nitrogen.

- Please follow the description provided.

Note

The effect of the low-speed compression adjustment can be seen in slow to normal compression of the shock absorber.

Preparatory work

- Remove the seat. (p. 79)
- Removing the right side fairing (p. 82)

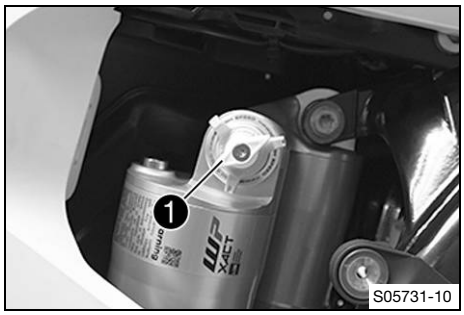

Main work

– Turn adjusters ❶ clockwise up to the last perceptible click.
– Turn counterclockwise by the number of clicks corresponding to the shock absorber type.

Comfort	18 clicks
Standard	15 clicks
Sport	12 clicks

Note
Turning clockwise increases damping; turning counterclockwise reduces damping during compression.

Reworking

– Installing the right side cover (p. 83)
– Mount the seat. (p. 79)

11.4 Adjusting the high-speed compression damping of the shock absorber

CAUTION
Risk of injury Parts of the shock absorber will move erratically if the shock absorber is detached incorrectly.
The shock absorber is filled with highly compressed nitrogen.
– Please follow the description provided.

Note
The effect of the high-speed compression adjustment can be seen in the fast compression of the shock absorber.

Preparatory work

– Remove the seat. (p. 79)
– Removing the right side fairing (p. 82)

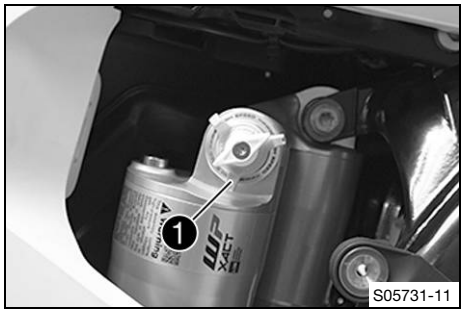

Main work

– Turn adjuster ❶ clockwise all the way to the stop.
– Turn counterclockwise by the number of turns corresponding to the shock absorber type.

Comfort	2.5 turns (900°)
Standard	2 turns (720°)
Sport	1.5 turns (540°)

Note
Turning clockwise increases damping; turning counterclockwise reduces damping during compression.

Reworking

– Installing the right side cover (p. 83)
– Mount the seat. (p. 79)

11.5 Adjusting the rebound damping of the shock absorber

CAUTION

Risk of injury Parts of the shock absorber will move erratically if the shock absorber is detached incorrectly.

The shock absorber is filled with highly compressed nitrogen.

– Please follow the description provided.

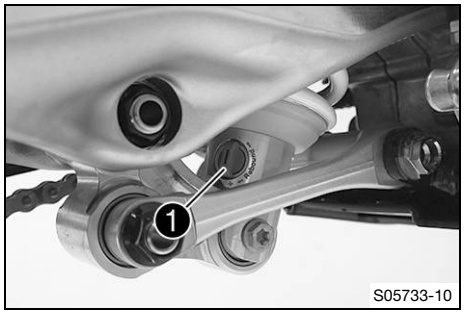

– Turn adjusters ❶ clockwise up to the last perceptible click.
– Turn counterclockwise by the number of clicks corresponding to the shock absorber type.

Comfort	18 clicks
Standard	15 clicks
Sport	12 clicks

Note

Turning clockwise increases damping; turning anti-clockwise reduces damping on rebound.

11.6 Measuring the dimension of the unloaded rear wheel

Preparatory work

– Raise the motorcycle with a lift stand. (p. 64)

Main work

– Position the sag scale in the rear axle and measure the distance to marking **SAG** on the rear fender.

Sag scale (00029090200)

– Note the value as dimension Ⓐ.

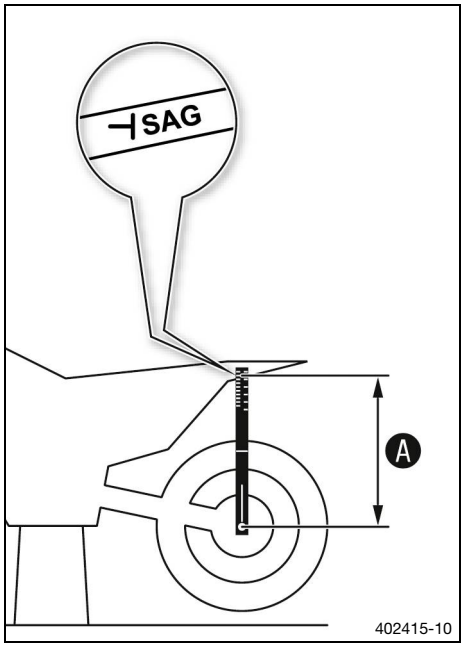

Reworking

– Remove the motorcycle from the lift stand. (p. 64)

11.7 Checking the static sag of the shock absorber

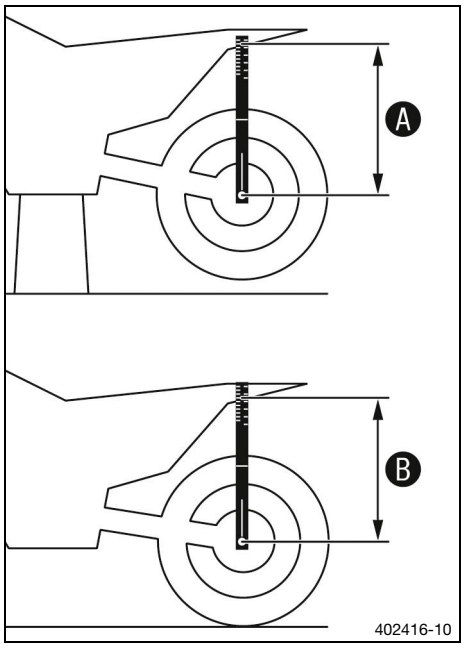

– Determine rear wheel dimension A. (p. 56)
– Hold the motorcycle upright with aid of an assistant.
– Measure the distance again between the rear axle and marking **SAG** on the rear fender using the sag scale.
– Note the value as dimension B.

> **Note**
> The static sag is the difference between measurements A and B.

– Check the static sag.

Static sag	40 mm (1.57 in)

» If the static sag is more or less than the specified value:
  – Adjust the preload for the shock absorber. (p. 58)

11.8 Checking the rider sag of the shock absorber

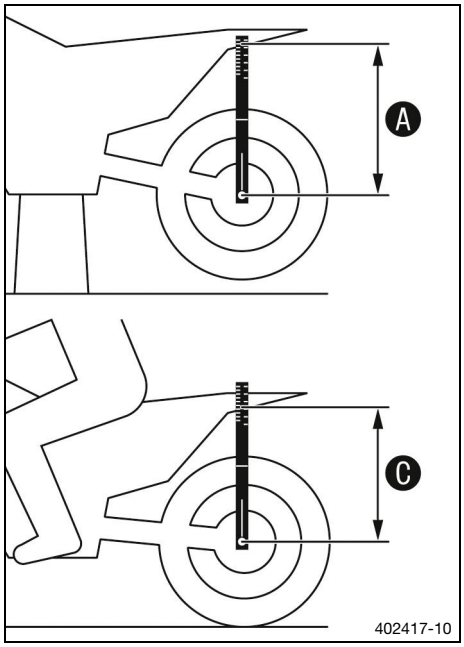

– Measure the dimension of the unloaded rear wheel. (p. 56)
– With another person holding the motorcycle, sit on the saddle with full protective clothing in a normal sitting position (feet on footrests) and bounce up and down a few times.
  ✓ The rear wheel suspension levels out.
– With the help of another person, remeasure the distance between the rear axle and marking **SAG** on the rear fender using the sag scale.
– Note the value as dimension C.

> **Note**
> The rider sag is the difference between measurements A and C.

– Check the rider sag.

Rider sag	110 mm (4.33 in)

» If the rider sag differs from the specified measurement:
  – Adjust the rider sag. (p. 59)

11.9 Adjusting the preload for the shock absorber

CAUTION

Risk of injury Parts of the shock absorber will move erratically if the shock absorber is detached incorrectly.

The shock absorber is filled with highly compressed nitrogen.

– Please follow the description provided.

Note

Note the current adjustment before changing the spring preload - e.g. measure the spring length.

Preparatory work

– Raise the motorcycle with a lift stand. (p. 64)
– Remove air filter box cover. (p. 80)
– Remove the frame protector. (p. 67)
– Remove the seat. (p. 79)
– Removing the right side fairing (p. 82)
– Remove the shock absorber. (p. 76)
– After removing the shock absorber, clean it thoroughly.

Main work

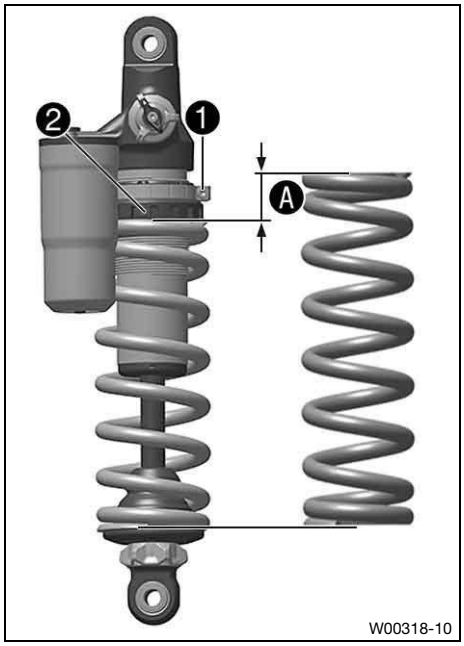

– Loosen screw 1.
– Turn adjusting ring 2 until the spring is no longer under tension.

Hook wrench (90129051000)

Note

If the spring cannot be fully released, remove it to accurately measure the spring length.

– Measure the total spring length while the spring is not under tension.
– Tension the spring by turning adjusting ring 2 to the specified degree A.

Preload	7 mm (0.28 in)

Note

Depending on the static sag and/or the rider sag, it may be necessary to increase or decrease the spring preload.

– Tighten screw 1.

Screw, shock absorber adjusting ring	
M5	5 Nm (3.7 ft·lb$_f$)

Make sure that the adjusting ring does not touch any other components when installed.

Reworking

- Install the shock absorber. (p. 77)
- Install the frame protector. (p. 67)
- Install the air filter box cover. (p. 80)
- Installing the right side cover (p. 83)
- Mount the seat. (p. 79)
- Remove the motorcycle from the lift stand. (p. 64)
- Check the static sag of the shock absorber. (p. 57)
- Check the rider sag of the shock absorber. (p. 57)
- Adjust the rebound damping of the shock absorber. (p. 56)

11.10 Adjusting the rider sag

Preparatory work

- Raise the motorcycle with a lift stand. (p. 64)
- Remove air filter box cover. (p. 80)
- Remove the frame protector. (p. 67)
- Remove the seat. (p. 79)
- Removing the right side fairing (p. 82)
- Remove the shock absorber. (p. 76)
- After removing the shock absorber, clean it thoroughly.

Main work

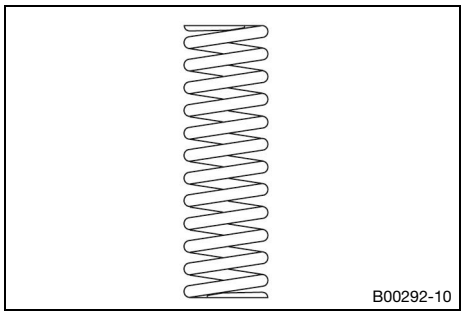

- Select and mount a suitable spring.

Weight of rider: 65 kg … 75 kg (143.3 lb … 165.3 lb)	42 N/mm (239.8 lb_f/in)
Weight of rider: 75 kg … 85 kg (165.3 lb … 187.4 lb)	45 N/mm (257.0 lb_f/in)
Weight of rider: 85 kg … 95 kg (187.4 lb … 209.4 lb)	48 N/mm (274.1 lb_f/in)

Note

The spring rate is shown on the outside of the spring. Smaller weight differences can be compensated by changing the spring preload.

Reworking

- Install the shock absorber. (p. 77)
- Install the frame protector. (p. 67)
- Install the air filter box cover. (p. 80)
- Installing the right side cover (p. 83)
- Mount the seat. (p. 79)
- Remove the motorcycle from the lift stand. (p. 64)
- Check the static sag of the shock absorber. (p. 57)

– Check the rider sag of the shock absorber. (p. 57)
– Adjust the rebound damping of the shock absorber. (p. 56)

11.11 Checking the basic setting of the fork

Note
For various reasons, no exact rider sag can be determined for the fork.

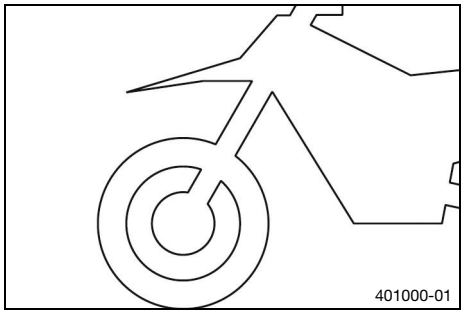

– As with the shock absorber, smaller differences in the rider's weight can be compensated by the spring preload.
– However, if the fork frequently bottoms out (hard end stop on compression), harder springs must be fitted to avoid damage to the fork and frame.
– If the fork feels unusually hard after extended periods of operation, the fork legs need to be bled.

11.12 Adjusting the compression damping of the fork

Note
The hydraulic compression damping determines the fork suspension behavior.

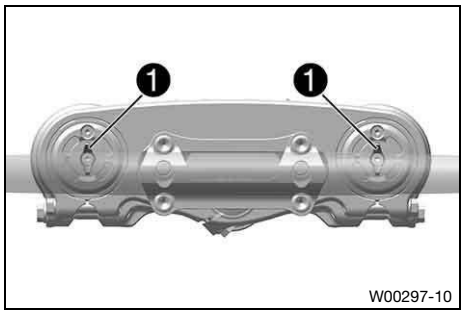

(All standard models)

– Turn white adjuster 1 clockwise as far as it will go.

Note
Adjusters 1 COMP are located at the top end of the fork legs.

– Turn counterclockwise by the number of clicks corresponding to the fork type.

Compression damping	
Comfort	17 clicks
Standard	15 clicks
Sport	7 clicks

Note
Turning clockwise increases damping; turning counterclockwise reduces damping during compression.

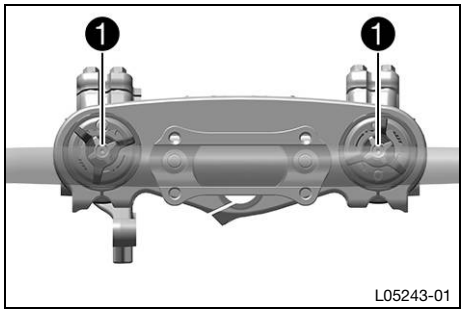

(All special models)

– Turn white adjuster ❶ clockwise as far as it will go.

Note
Adjusters ❶ **COMP** are located at the top end of the fork legs.

– Turn counterclockwise by the number of clicks corresponding to the fork type.

Compression damping	
Comfort	17 clicks
Standard	15 clicks
Sport	7 clicks

Note
Turning clockwise increases damping; turning counterclockwise reduces damping during compression.

11.13 Adjusting the spring preload of the fork (All special models)

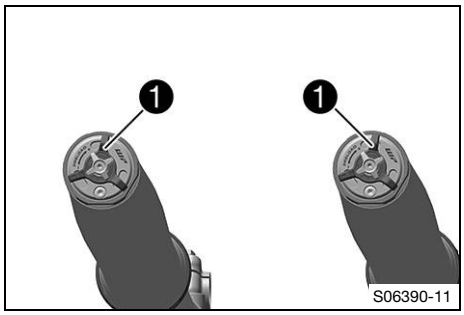

Preparatory work

– Raise the motorcycle with a lift stand. (p. 64)

Main work

– Turn adjusters ❶ counterclockwise all the way to the stop.

Adjust by hand only; do not use a tool.

Note
Make the same adjustment on both fork legs.

– Turn adjusters clockwise.

Spring preload – preload adjuster	0 turns (0°)

✓ The adjusters engage noticeably.

– Only adjust the preload in the engage positions, as the preload does not engage between the engage positions.

Note
Turn clockwise to increase the spring preload; turn counterclockwise to reduce the spring preload.
Adjusting the spring preload has no influence on the absorption setting of the rebound.
Set the rebound damping higher with a higher preload.

Reworking

– Remove the motorcycle from the lift stand. (p. 64)

11.14 Adjusting the rebound damping of the fork

Note
The hydraulic rebound damping determines the fork suspension behavior.

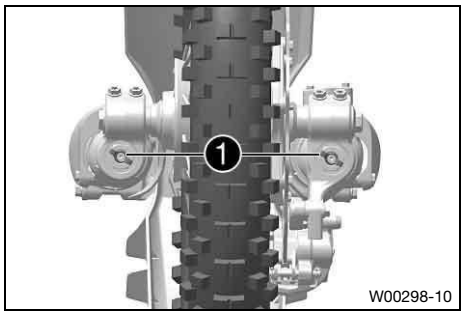

– Turn red adjuster ❶ clockwise as far as it will go.

Note
The adjuster ❶ **REB** is located at the bottom end of the fork legs.

– Turn counterclockwise by the number of clicks corresponding to the fork type.

Rebound damping **(All standard models)**	
Comfort	19 clicks
Standard	17 clicks
Sport	9 clicks

Rebound damping **(All special models)**	
Comfort	19 clicks
Standard	17 clicks
Sport	9 clicks

Note
Turning clockwise increases damping; turning anti-clockwise reduces damping on rebound.

11.15 Handlebar position

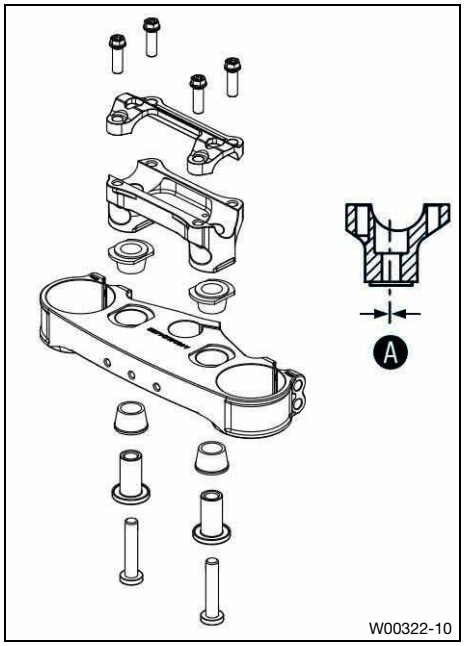

The holes on the handlebar support are placed at a distance of Ⓐ from the center.

Hole distance Ⓐ	3.5 mm (0.138 in)

The handlebar support can be mounted in two different positions. This allows the handlebar to be mounted in the most comfortable position for the rider.

11.16 Adjusting the handlebar position

WARNING

Danger of accidents A repaired handlebar poses a safety risk.

If the handlebar is bent or straightened, the material becomes fatigued. The handlebar may break as a result.

– Change the handlebar if the handlebar is damaged or bent.

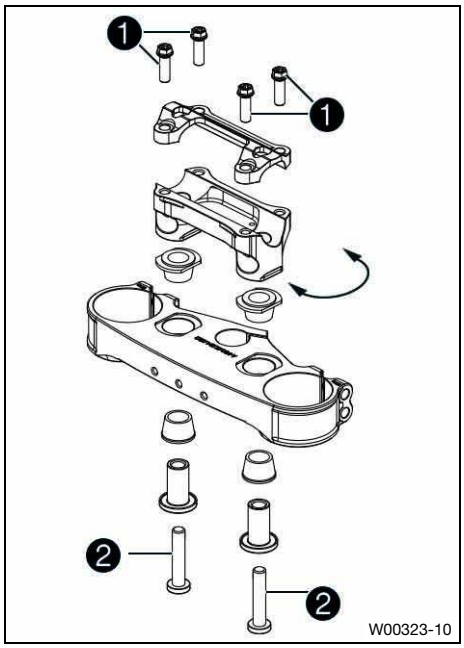

– Remove ❶ screws.

Protect the components against damage by covering them.

– Take off the handlebar clamp.
– Remove the handlebar and lay it to one side.

Do not kink the cables or lines.

– Remove ❷ screws.
– Take off the handlebar support.
– Place the handlebar mount in the required position.

Position the handlebar support so that it is even.

– Mount and tighten screws ❷.

Screw, handlebar mount	
M10	40 Nm (29.5 ft·lb$_f$) **Loctite® 243**

– Position the handlebar.

Make sure the cables and wiring are positioned correctly.

– Position the handlebar clamp.
– Mount screws ❶ and tighten evenly.

Handlebar clamp screw	
M8	20 Nm (14.8 ft·lb$_f$)

Make sure the installed gap widths are even.

12.1 Raising the motorcycle with a lift stand

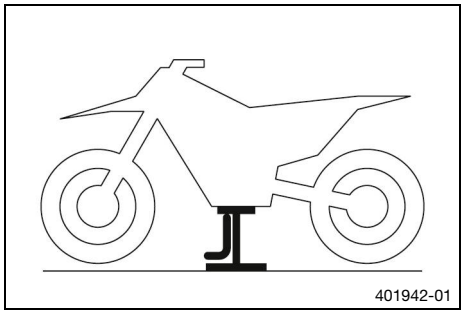

NOTE

Material damage The vehicle may be damaged if parked incorrectly.

Damage can occur if the vehicle rolls away or falls over.

The components for parking the vehicle are designed only for the weight of the vehicle.

- Park the vehicle on a firm and level surface.
- Make sure that nobody sits on the vehicle when it is parked on a stand.

- Raise the motorcycle at the frame underneath the engine.

  Lift stand (78129955100)

  ✓ Neither wheel is in contact with the ground.
- Secure the motorcycle against falling over.

12.2 Removing the motorcycle from the lift stand

NOTE

Material damage The vehicle may be damaged if parked incorrectly.

Damage can occur if the vehicle rolls away or falls over.

The components for parking the vehicle are designed only for the weight of the vehicle.

- Park the vehicle on a firm and level surface.
- Make sure that nobody sits on the vehicle when it is parked on a stand.

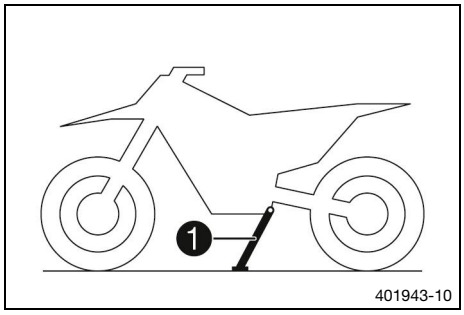

- Remove the motorcycle from the lift stand.
- Remove the lift stand.
- To park the motorcycle, press side stand ❶ to the ground with your foot and lean the motorcycle on it.

  When you are riding, the side stand must be folded up and secured with the rubber band.

12.3 Bleeding the fork legs

Preparatory work

- Raise the motorcycle with a lift stand. (p. 64)

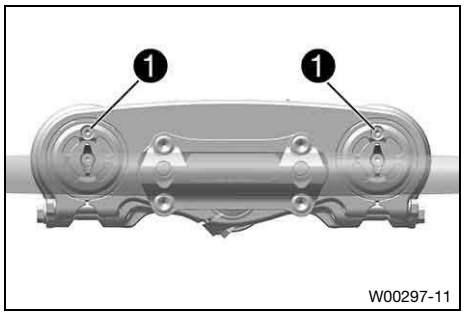

Main work
(All standard models)

– Loosen bleeder screw ❶.
  ✓ Any excess pressure escapes from the inner fork.
– Tighten the bleeder screw.

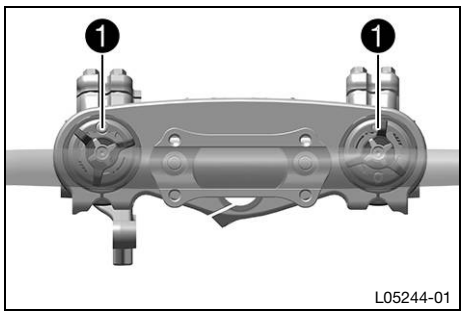

(All special models)

– Loosen bleeder screw ❶.
  ✓ Any excess pressure escapes from the inner fork.
– Tighten the bleeder screw.

Reworking

– Remove the motorcycle from the lift stand. (p. 64)

12.4 Cleaning the dust boots of the fork legs

Preparatory work

– Raise the motorcycle with a lift stand. (p. 64)
– Remove the fork protector. (p. 66)

Main work

– Push dust boot ❶ downward on both fork legs.

Note
The dust boots should remove dust and coarse dirt particles from the inner fork tubes. Over time, dirt can accumulate behind the dust boots. If this dirt is not removed, the oil seals behind can start to leak.

WARNING
Danger of accidents Oil, grease or wax on the brake discs reduces the brake action.
– Always keep the brake discs free of oil, fat and wax.
– Clean the brake discs with brake cleaner when necessary.

– Clean and oil the dust boots and the inner fork tube of both fork legs.

Universal oil spray (p. 175)

– Press the dust boots back into their installation position.
– Remove excess oil.

Reworking

– Install the fork protector. (p. 66)
– Remove the motorcycle from the lift stand. (p. 64)

12.5 Removing the fork protector

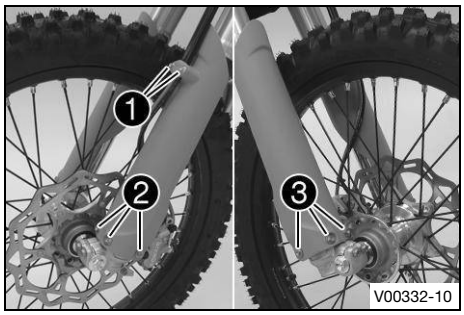

– Remove screw ❶ and take off the clamp.
– Remove screws ❷ on the left fork leg and take off the left fork protector.
– Remove screws ❸ on the right fork leg and take off the right fork protector.

12.6 Installing the fork protector

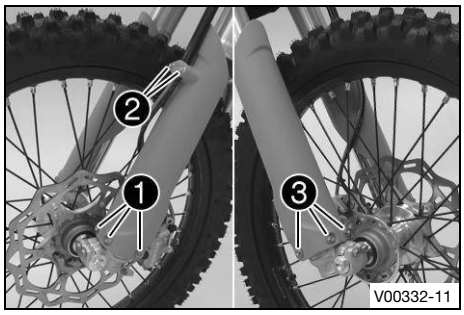

– Position the fork protector on the left fork leg. Mount and tighten screws ❶.

Remaining screws on chassis	
M6	10 Nm (7.4 ft·lb$_f$)

– Position the brake line, the wiring harness, and the clamp. Mount and tighten screws ❷.

Remaining screws on chassis	
EJOT PT® – K60×25 – Z	2 Nm (1.5 ft·lb$_f$)

– Position the fork protector on the right fork leg. Mount and tighten screws ❸.

Remaining screws on chassis	
M6	10 Nm (7.4 ft·lb$_f$)

12.7 Removing the frame protector

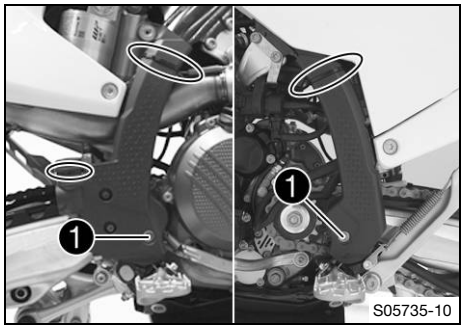

Preparatory work

– Remove air filter box cover. (p. 80)

Main work

– Remove the cable ties.
– Remove screws ❶ with the bushings.
– Take off the left frame protector.
– Push the right frame protector to the front and take off at the bottom.

12.8 Installing the frame protector

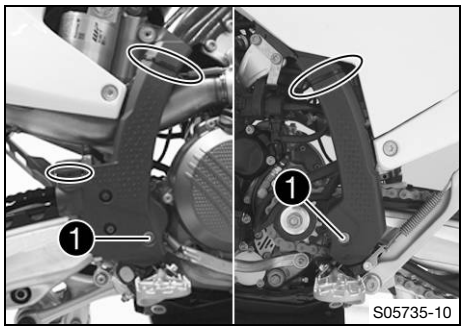

Main work

– Position the left frame protector.
– Insert the right frame protector from below and push it to the rear.
– Mount screws ❶ with the bushings and tighten.

Screw, frame protector	
M5	3 Nm (2.2 ft·lb$_f$)

– Secure the frame protector with cable ties.

Turn the head of the cable tie so far back that it does not touch any other components.

Reworking

– Install the air filter box cover. (p. 80)

12.9 Removing the fork legs

Preparatory work

– Raise the motorcycle with a lift stand. (p. 64)
– Remove the front wheel. (p. 112)

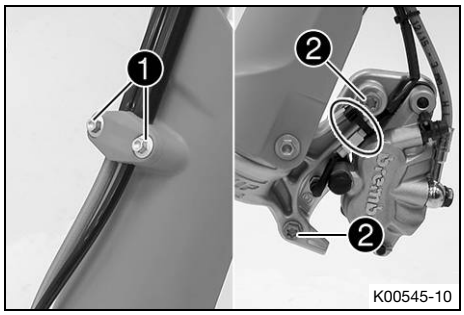

Main work

- Remove screw ❶ and take off the clamp.
- Remove the cable ties.
- Remove screws ❷ and take off the brake caliper.
- Allow the brake caliper and the brake line to hang loosely to the side.

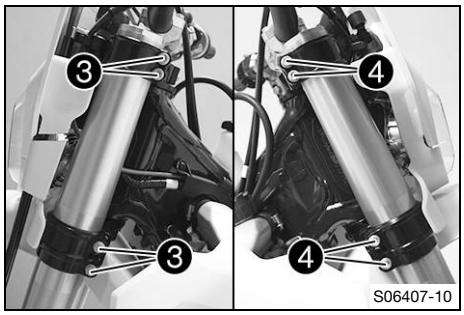

- Loosen screws ❸.
- Remove the left fork leg.
- Loosen screws ❹.
- Remove the right fork leg.

12.10 Installing the fork legs

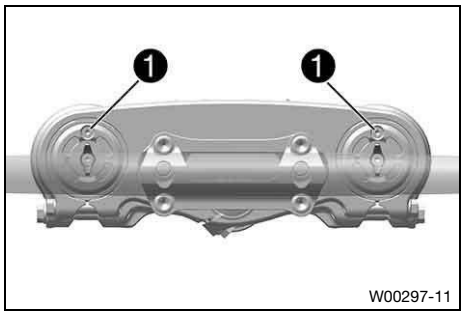

Main work

(All standard models)

- Position the fork legs.
  - ✓ Bleeder screws ❶ are positioned toward the front.

Note

Grooves are milled into the side of the upper end of the fork legs. The second milled groove (from the top) must be flush with the upper edge of the upper triple clamp.

The pressure and rebound damping is located in the left and right fork leg.

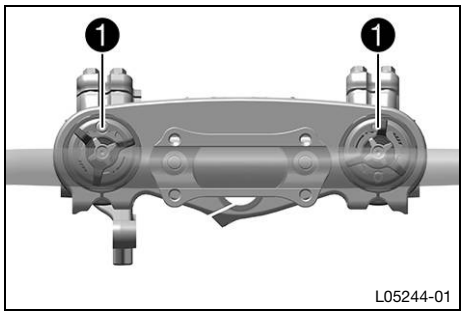

(All special models)

- Position the fork legs.
  - ✓ Bleeder screws ❶ are positioned toward the front.

Note

Grooves are milled into the side of the upper end of the fork legs. The second milled groove (from the top) must be flush with the upper edge of the upper triple clamp.

The pressure and rebound damping is located in the left and right fork leg.

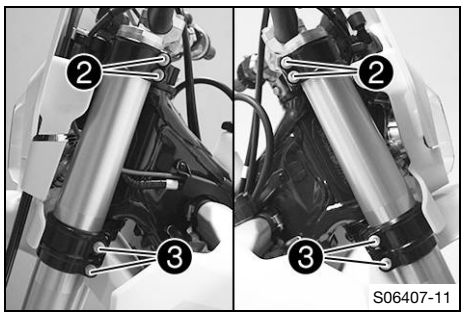

– Tighten screws ❷.

Milled upper triple clamp screw	
M8	17 Nm (12.5 ft·lb$_f$)

– Tighten screws ❸.

Milled lower triple clamp screw	
M8	12 Nm (8.9 ft·lb$_f$)

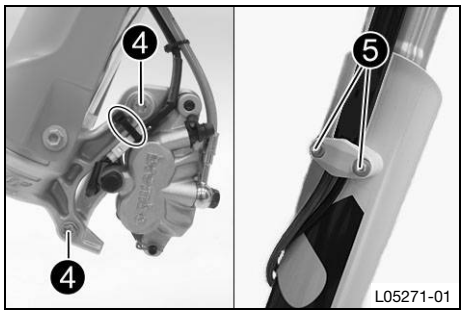

– Position the brake caliper, and mount and tighten screws ❹.

Screw, front brake caliper	
M8	25 Nm (18.4 ft·lb$_f$) **Loctite® 243**

– Mount cable ties.
– Position the brake line, the wiring harness, and the clamp. Mount and tighten screws ❺.

Remaining screws on chassis	
EJOT PT® – K60×25 – Z	2 Nm (1.5 ft·lb$_f$)

Reworking

– Install the front wheel. (p. 113)

12.11 Removing the lower triple clamp

Preparatory work

– Raise the motorcycle with a lift stand. (p. 64)
– Remove the front wheel. (p. 112)
– Remove the fork legs. (p. 67)
– Remove the headlight mask with the headlight. (p. 124)
– Remove the front top fender. (p. 74)
– Remove the handlebar pad.

Main work

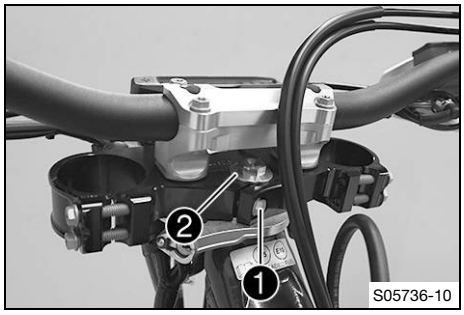

– Remove screw ❶.
– Remove screw ❷.
– Take off the upper triple clamp with the handlebar and hang them to the side.

Protect the components against damage by covering them.
Do not kink the cables or lines.

– Remove protective ring ❸.
– Take off the lower triple clamp with the steering stem.
– Remove the upper steering head bearing.

12.12 Installing the lower triple clamp

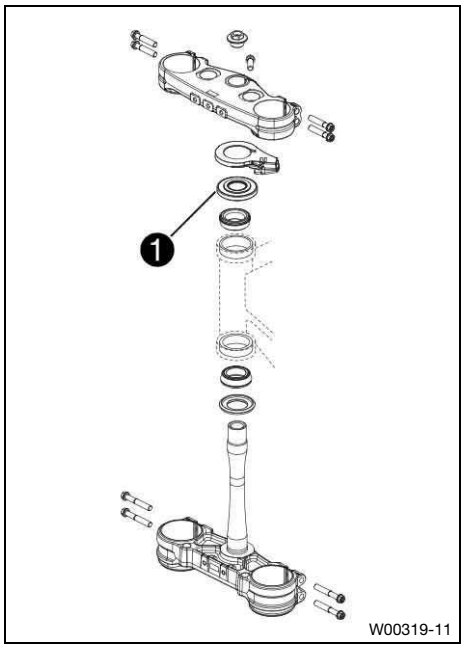

Main work

– Clean the bearing and sealing elements, check for damage, and grease.

High viscosity grease (p. 176)

– Insert the lower triple clamp with the steering stem. Mount the upper steering head bearing.
– Push on protective ring ❶.

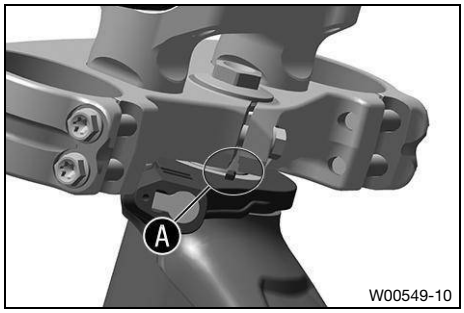

(All EU models)

– Make sure the steering lock in area Ⓐ is positioned correctly.
  ✓ The holding lug on the steering lock engages in the notch on the triple clamp.

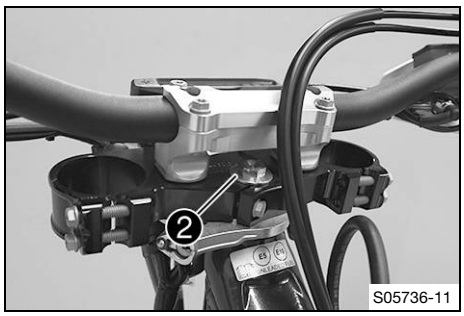

– Position the upper triple clamp and handlebar.
– Mount screw ❷, but do not tighten it yet.

Screw, top steering head	
M20×1.5	12 Nm (8.9 ft·lb$_f$)

(All standard models)

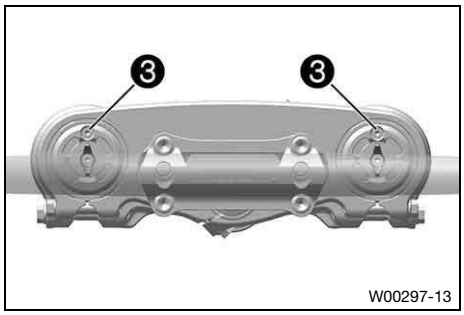

– Position the fork legs.
✓ Bleeder screws ❸ are positioned toward the front.

Note
Grooves are milled into the side of the upper end of the fork legs. The second milled groove (from the top) must be flush with the upper edge of the upper triple clamp.
The pressure and rebound damping is located in the left and right fork leg.

(All special models)

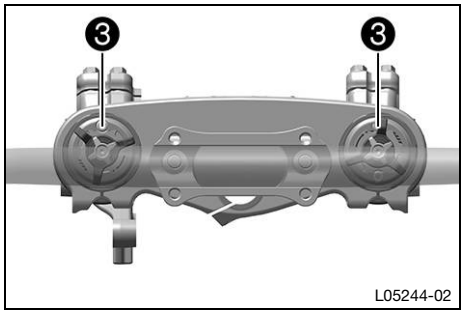

– Position the fork legs.
✓ Bleeder screws ❸ are positioned toward the front.

Note
Grooves are milled into the side of the upper end of the fork legs. The second milled groove (from the top) must be flush with the upper edge of the upper triple clamp.
The pressure and rebound damping is located in the left and right fork leg.

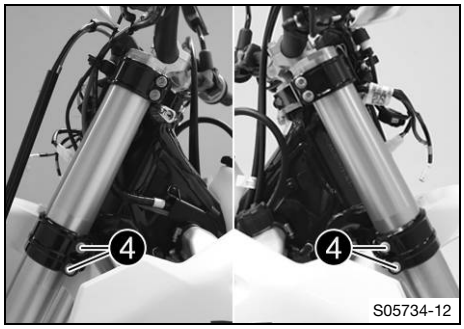

– Tighten screws ❹.

Milled lower triple clamp screw	
M8	12 Nm (8.9 ft·lb$_f$)

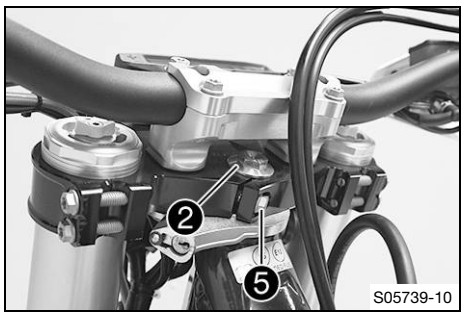

– Tighten screw ❷.

Screw, top steering head	
M20×1.5	12 Nm (8.9 ft·lb$_f$)

– Mount and tighten screw ❺.

Screw, upper steering stem	
M8	20 Nm (14.8 ft·lb$_f$) **Loctite® 243**

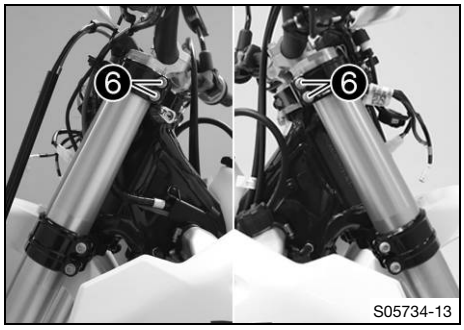

– Tighten screws ❻.

Milled upper triple clamp screw	
M8	17 Nm (12.5 ft·lb$_f$)

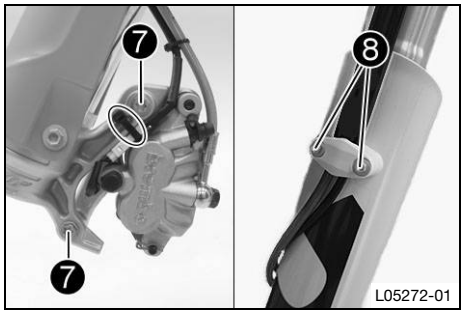

– Position the brake caliper, and mount and tighten screws ❼.

Screw, front brake caliper	
M8	25 Nm (18.4 ft·lb$_f$) **Loctite® 243**

– Mount cable ties.
– Position the brake line, the wiring harness, and the clamp. Mount and tighten screws ❽.

Remaining screws on chassis	
EJOT PT® – K60×25 – Z	2 Nm (1.5 ft·lb$_f$)

Reworking

– Mount the handlebar pad.
– Install the front top fender. (p. 75)
– Install the headlight mask with the headlight. (p. 125)
– Install the front wheel. (p. 113)
– Check the wiring harness, cables, and brake and clutch lines for freedom of movement and correct routing.
– Check the steering head bearing play. (p. 73)
– Remove the motorcycle from the lift stand. (p. 64)
– Check the headlight setting. (p. 126)

12.13 Checking the steering head bearing play

WARNING

Danger of accidents Incorrect steering head bearing play can impair the handling characteristic and damage components.

– Correct incorrect steering head bearing play immediately.

Note

If the vehicle is operated for a lengthy period with play in the steering head bearing, the bearings and the bearing seats in the frame can become damaged.

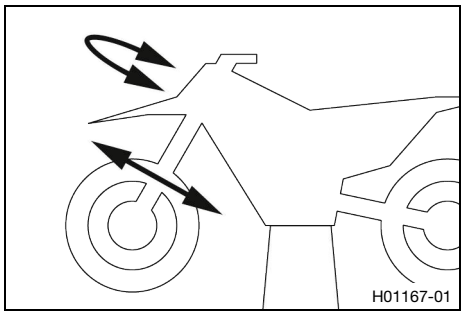

Preparatory work

– Raise the motorcycle with a lift stand. (p. 64)

Main work

– Move the handlebar to the straight-ahead position. Move the fork legs to and fro in the direction of travel.

Play should not be detectable on the steering head bearing.

» If there is detectable play:

  – Adjust the steering head bearing play. (p. 73)

– Move the handlebar back and forth over the entire steering range.

It must be possible to move the handlebar easily over the entire steering range. There should be no detectable detent positions.

» If detent positions are detected:

  – Adjust the steering head bearing play. (p. 73)

  – Check the steering head bearing and replace if necessary.

Reworking

– Remove the motorcycle from the lift stand. (p. 64)

12.14 Adjusting the steering head bearing play

Preparatory work

– Raise the motorcycle with a lift stand. (p. 64)

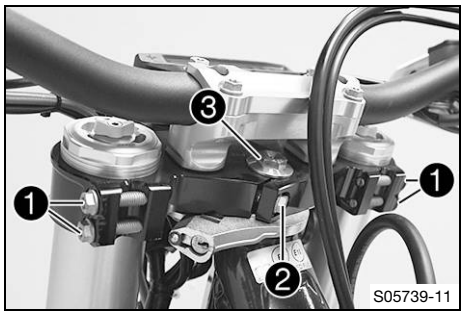

Main work

– Loosen screws ❶.
– Remove screw ❷.
– Loosen and retighten screw ❸.

Screw, top steering head	
M20×1.5	12 Nm (8.9 ft·lb$_f$)

– Using a plastic hammer, tap lightly on the upper triple clamp to avoid stresses.
– Tighten screws ❶.

Milled upper triple clamp screw	
M8	17 Nm (12.5 ft·lb$_f$)

– Mount and tighten screw ❷.

Screw, upper steering stem	
M8	17 Nm (12.5 ft·lb$_f$) **Loctite® 243**

Reworking

– Check the steering head bearing play. (p. 73)
– Remove the motorcycle from the lift stand. (p. 64)

12.15 Lubricating the steering head bearing

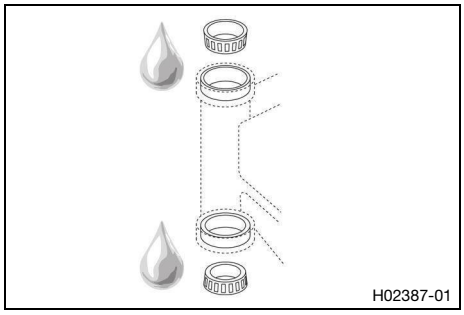

– Remove the lower triple clamp. (p. 69)
– Install the lower triple clamp. (p. 70)

Note
The steering head bearing is cleaned and lubricated in the course of removal and installation of the lower triple clamp.

12.16 Removing the front top fender

Preparatory work

– Remove the headlight mask with the headlight. (p. 124)

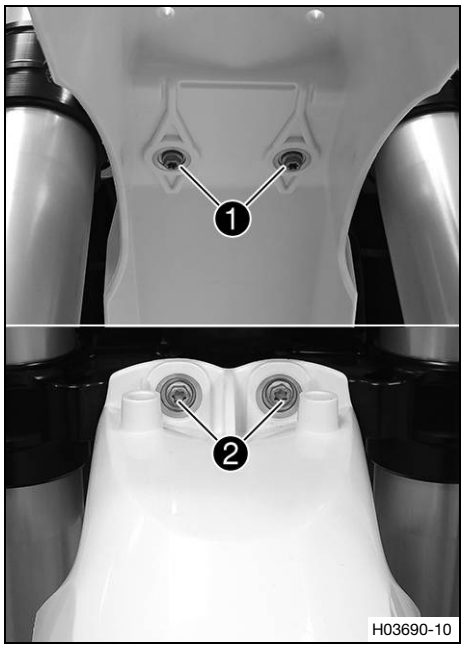

Main work

– Remove ❶ screws.
– Remove ❷ screws. Remove the front fender.

12.17 Installing the front top fender

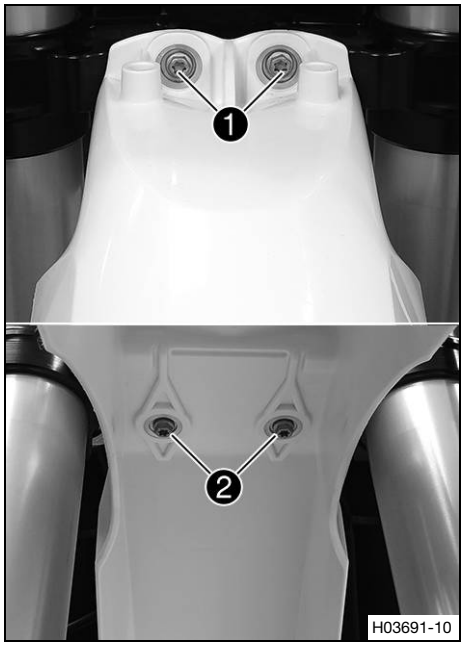

Main work

– Position the front fender. Mount and tighten screws ❶.

Remaining screws on chassis	
M6	10 Nm (7.4 ft·lb$_f$)

– Mount and tighten screws ❷.

Remaining screws on chassis	
M6	10 Nm (7.4 ft·lb$_f$)

Reworking

– Install the headlight mask with the headlight. (p. 125)
– Check the headlight setting. (p. 126)

12.18 Removing the shock absorber

Preparatory work

- Raise the motorcycle with a lift stand. (p. 64)
- Remove air filter box cover. (p. 80)
- Remove the frame protector. (p. 67)
- Remove the seat. (p. 79)
- Removing the right side fairing (p. 82)

Main work

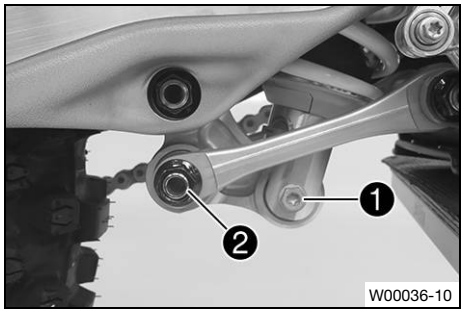

- Remove screw ❶.
- Remove screw connection ❷.

> **Tip**
> Raise the swingarm slightly to be able to remove the screws more easily.

- Disconnect the plug-in connector of the brake light switch.

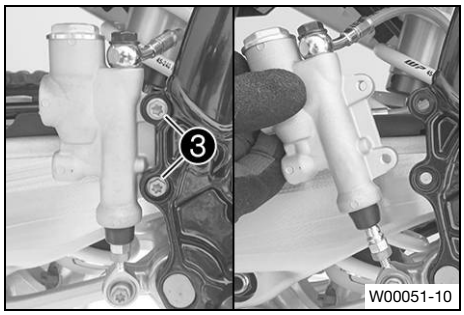

- Remove screws ❸.
- Pull off brake cylinder from the push rod.

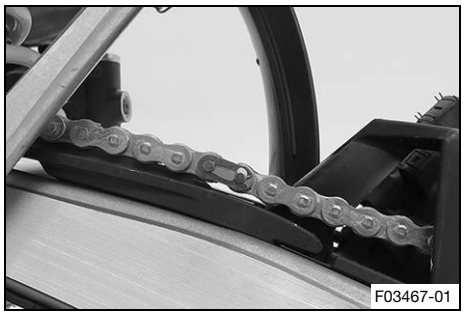

- Remove the connecting link on the chain.

Protect the components against damage by covering them.

- Take off the chain.

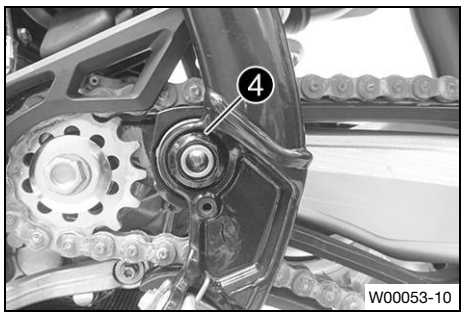

– Remove nut ❹ and pull out the swingarm pivot.
– Push the swingarm back and secure it against falling over.

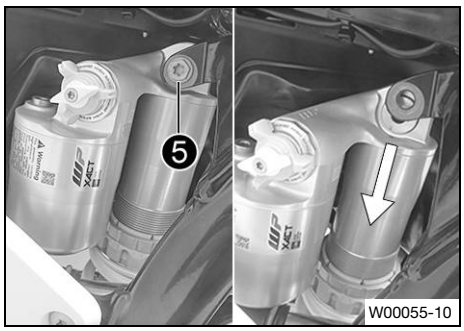

– Hold the shock absorber and remove screw ❺.
– Remove the shock absorber carefully at the bottom.

12.19 Installing the shock absorber

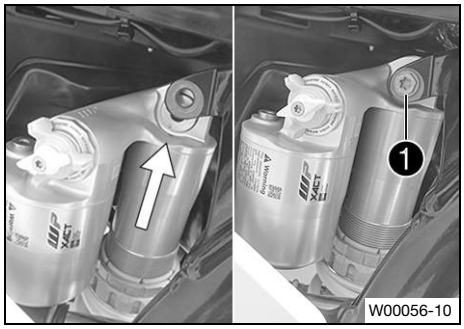

Main work

– Carefully position the shock absorber into the vehicle from the bottom.
– Mount and tighten screw ❶.

Top shock absorber screw	
M10	60 Nm (44.3 ft·lb$_f$) **Loctite® 2701**

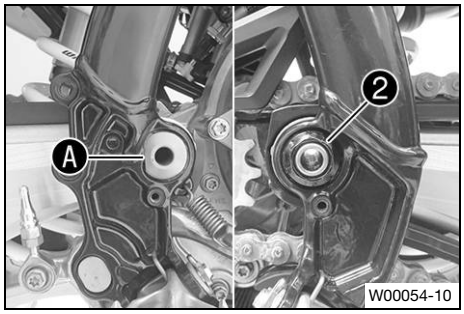

– Position the swingarm and fit the swingarm pivot.

Pay attention to flat area Ⓐ.

– Mount and tighten nut ❷.

Nut, swingarm pivot	
M16×1.5	100 Nm (73.8 ft·lb$_f$)

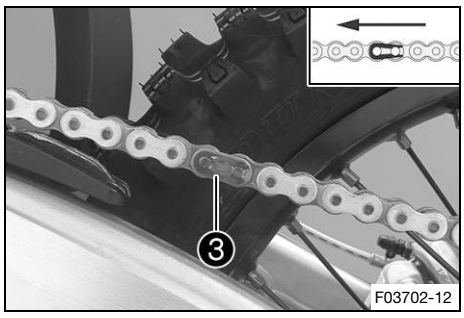

– Mount the chain.
– Connect the chain with connecting link ❸.

The closed side of the master link clip must face in the direction of travel.

– Join plug-in connector of the brake light switch.

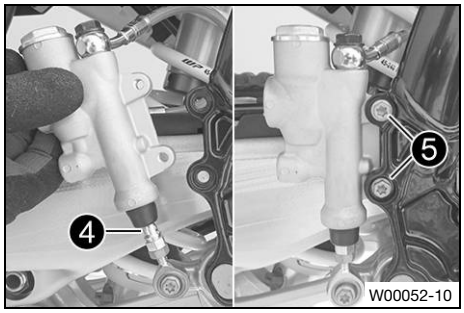

– Position the brake cylinder.
  ✓ Push rod ❹ engages in the brake cylinder.
  ✓ The dust boot is correctly positioned.
– Mount and tighten screws ❺.

Remaining screws on chassis	
M6	10 Nm (7.4 ft·lb$_f$)

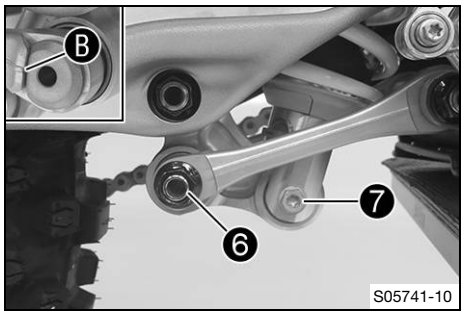

– Position the power valve control lever and linkage lever.
– Mount and tighten screw connection ❻.

Nut, linkage lever on angle lever	
M16x1,5	80 Nm (59.0 ft·lb$_f$)

– Pay attention to flat area Ⓑ.
– Mount and tighten screw ❼.

Bottom shock absorber screw	
M10	60 Nm (44.3 ft·lb$_f$) **Loctite® 2701**

Tip
Raise the swingarm slightly to be able to mount the screw more easily.

Reworking

- Install the frame protector. (p. 67)
- Install the air filter box cover. (p. 80)
- Installing the right side cover (p. 83)
- Mount the seat. (p. 79)
- Remove the motorcycle from the lift stand. (p. 64)

12.20 Removing the seat

- Remove screw ❶.
- Raise seat, pull it toward the fuel tank and take it off.

12.21 Mounting the seat

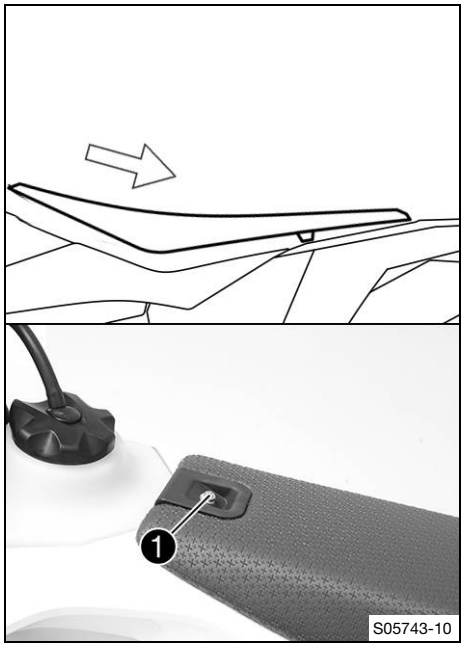

- Mount the front of the seat on the collar bushings of the fuel tank, lower the seat at the rear, and push the seat to the rear.
  ✓ The holding lugs engage in the recesses at the back.
- Make sure the seat is latched in place correctly.
- Mount and tighten screw ❶.

Remaining screws on chassis	
M6	10 Nm (7.4 ft·lb$_f$)

12.22 Removing air filter box cover

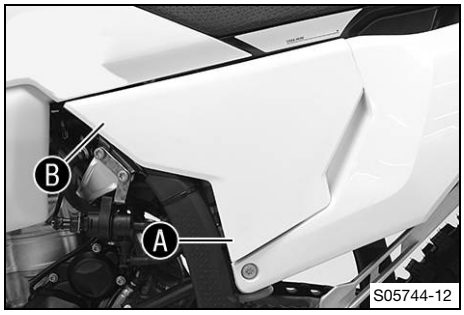

– Pull off the air filter box cover sideways in areas A and B, and take off toward the front.

12.23 Installing air filter box cover

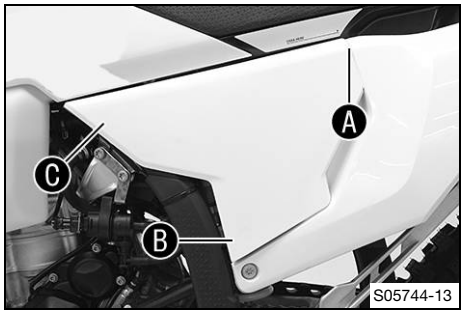

– Attach air box cover in area A.
– Allow the air filter box cover to engage in areas B and C.

12.24 Removing the air filter

NOTE

Engine failure Unfiltered intake air has a negative effect on the service life of the engine.
Dust and dirt can enter the engine if there is no air filter or if the air filter is mounted incorrectly.

– Only operate the vehicle if an air filter is correctly fitted.

NOTE

Environmental hazard Hazardous substances cause environmental damage.

– Dispose of oils, grease, filters, fuel, cleaning agents, brake fluid, etc. correctly and in accordance with the applicable regulations.

Preparatory work

– Remove air filter box cover. (p. 80)

Main work

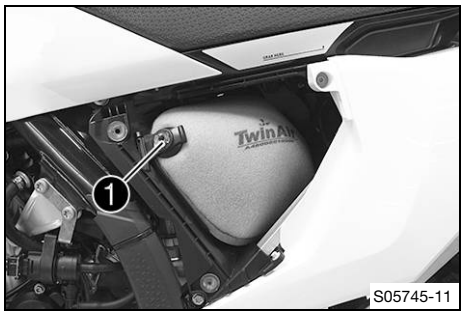

– Detach tab 1.
– Remove air filter with air filter support.
– Remove the air filter with the air filter support.

12.25 Installing the air filter

NOTE

Engine failure Unfiltered intake air has a negative effect on the service life of the engine.
Dust and dirt can enter the engine if there is no air filter or if the air filter is mounted incorrectly.

– Only operate the vehicle if an air filter is correctly fitted.

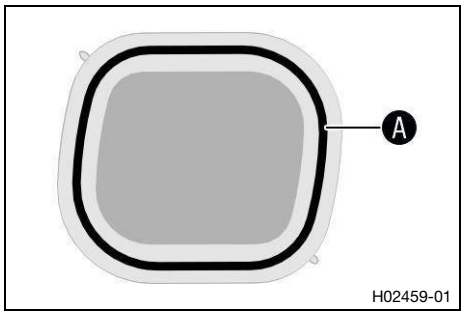

Main work

– Mount the clean air filter on the air filter support.
– Grease the air filter in area A.

Long-life grease (p. 175)

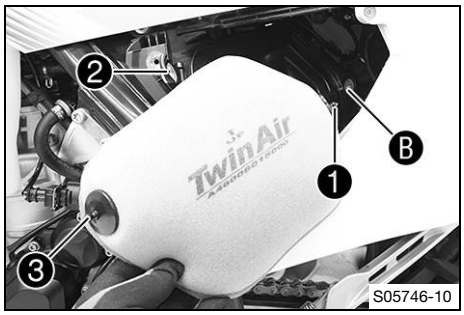

– Insert air filter and position retaining pin 1 in bushing B.
  ✓ The air filter is correctly positioned.
– The marking on the air filter must face upwards.
– Attach tab 2.
  ✓ Retaining pin 3 is secured with retaining tab 2.

Note
If the air filter is not mounted correctly, dust and dirt may enter the engine and result in damage.

Reworking

– Install the air filter box cover. (p. 80)

12.26 Cleaning the air filter and air filter box

NOTE

Environmental hazard Hazardous substances cause environmental damage.

– Dispose of oils, grease, filters, fuel, cleaning agents, brake fluid, etc. correctly and in accordance with the applicable regulations.

Preparatory work

– Remove air filter box cover. (p. 80)
– Remove the air filter. (p. 80)

W00299-10

Main work

– Wash the air filter thoroughly in special cleaning liquid and allow it to dry properly.

Do not clean the air filter with fuel or petroleum as these substances will damage the foam rubber.
Only press the air filter to dry it, do not wring it out.

Air filter cleaning agent (p. 178)

– Oil the dry air filter with a high-grade air filter oil.

Oil for foam air filter (p. 176)

– Clean the air filter box.
– Clean the intake flange and check it for damage and that it is firmly seated.

Reworking

– Install the air filter. (p. 81)
– Install the air filter box cover. (p. 80)

12.27 Removing the right side fairing

Preparatory work

– Remove the seat. (p. 79)

Main work

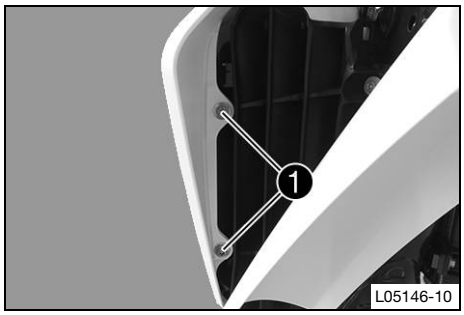

L05146-10

– Remove screws ❶.

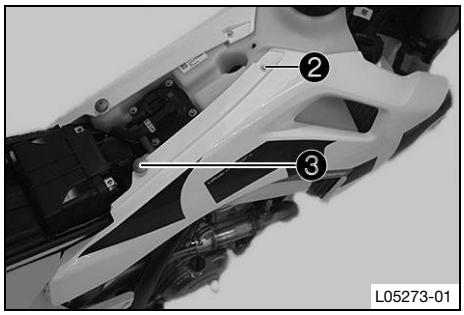

L05273-01

– Remove screw ❷.
– Remove screw ❸.

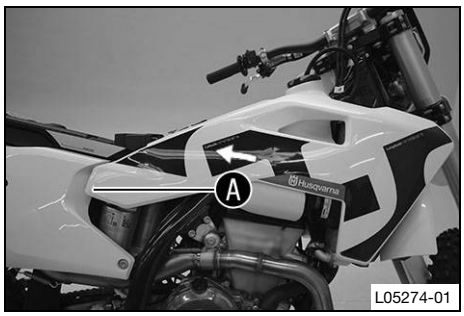

– Detach the side fairing in area Ⓐ and remove it toward the rear.

12.28 Installing the right side cover

Main work

– Position the right side fairing and press it forward to lock it into place.
– Press the side fairing into the rubber bushing in area Ⓐ.

Make sure the side fairing is correctly hooked into area Ⓐ.

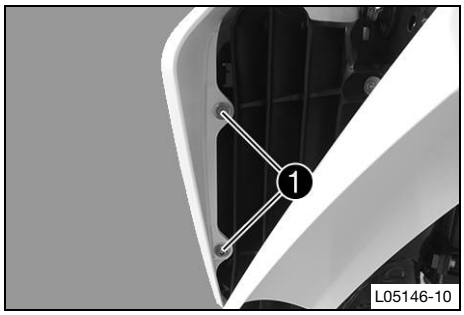

– Mount and tighten screws ❶.

Screw, fuel tank spoiler on radiator	
M6	6 Nm (4.4 ft·lb$_f$)

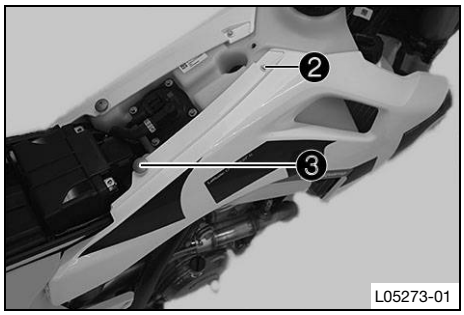

– Mount and tighten screw ❷.

Screw, seat installation	
EJOT EJOFORM® – K60×23/18	2.5 Nm (1.84 ft·lb$_f$)

– Mount and tighten screw ❸.

Screw, seat installation	
M6	8 Nm (5.9 ft·lb$_f$)

Reworking

– Mount the seat. (p. 79)

12.29 Removing the muffler

WARNING
Danger of burns The exhaust system gets hot when the vehicle is driven.
– Allow the exhaust system to cool down before performing any work on the vehicle.

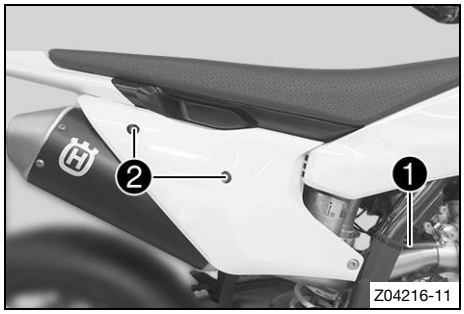

(All EU models)

– Detach spring ❶.

Spring hook (50305017000C1)

– Remove screws ❷ and take off the main silencer with the catalytic converter.

(BR models)

– Detach spring ❶.

Spring hook (50305017000C1)

– Remove screws ❷ and take off the main silencer.

12.30 Installing muffler

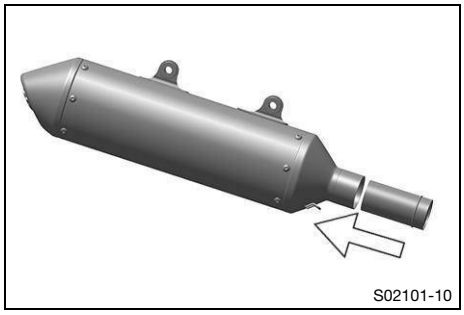

(All EU models)

– Position the catalytic converter in the main silencer.

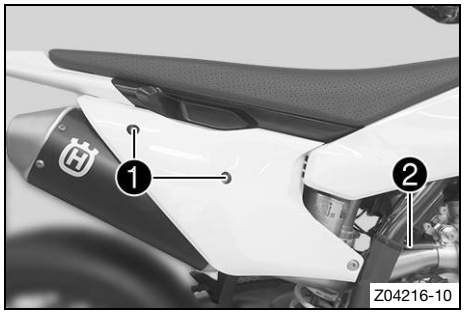

– Position the main silencer. Mount screws ❶, but do not tighten yet.

Remaining screws on chassis	
M6	10 Nm (7.4 ft·lb$_f$)

– Attach spring ❷.

Spring hook (50305017000C1)

– Tighten screws ❶.

Remaining screws on chassis	
M6	10 Nm (7.4 ft·lb$_f$)

12.31 Changing the damping material on the main silencer

WARNING
Danger of burns The exhaust system gets hot when the vehicle is driven.
– Allow the exhaust system to cool down before performing any work on the vehicle.

Note
Over time, the fibers of the rock wool dissipate and the main silencer “burns out”.
Not only does this make the noise level higher, but the performance characteristics also change.

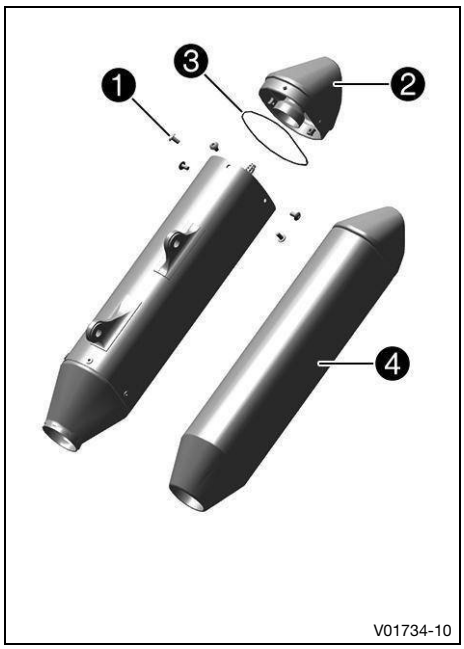

Preparatory work
– Remove the muffler. (p. 84)

Main work
– Remove screws ❶.
– Take off silencer cap ❷ with O-ring ❸.
– Remove old damping material.
– Clean the parts that need to be reinstalled and check for damage.
– Mount new damping material ❹ in the silencer.
– Mount the O-ring on the silencer cap.
– Position the silencer cap.
– Mount and tighten screws ❶.

Screws on muffler	
M5	7 Nm (5.2 ft·lb$_f$)

Reworking
– Install the muffler. (p. 84)

12.32 Removing the fuel tank

DANGER
Fire hazard Fuel is highly flammable.
The fuel in the fuel tank expands when warm and can escape if overfilled.
– Do not refuel the vehicle in the vicinity of open flames, glowing, or smoldering objects.
– Make sure that nobody smokes in the vicinity of the vehicle during the refueling process.
– Switch off the engine for refueling.
– Make sure that no fuel is spilled; particularly not on hot parts of the vehicle.
– If any fuel is spilled, wipe it up immediately.
– Do not overfill the fuel tank.

WARNING

Danger of poisoning Fuel is harmful to health.

- Do not allow fuel to come into contact with skin, eyes, or clothing.
- Consult a doctor immediately if fuel has been ingested.
- Do not inhale fuel vapors.
- Rinse the affected area immediately with plenty of water in the event of contact with skin.
- Rinse eyes thoroughly with water and consult a doctor immediately if fuel comes into contact with eyes.
- If fuel spills on to your clothing, change the clothing.
- Store fuel properly in a suitable container and keep out of the reach of children.

NOTE

Environmental hazard Improper handling of fuel is dangerous to the environment.

- Do not allow fuel to enter the groundwater, the soil, or the sewage system.

Preparatory work

- Remove the seat. (p. 79)

Main work

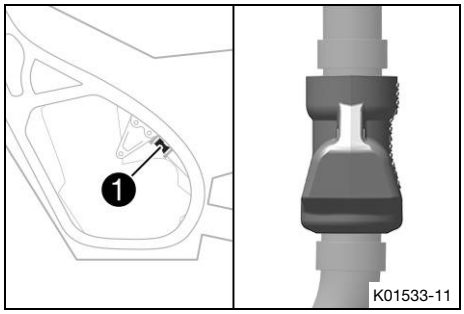

- Remove protection cap ❶ of the fuel line.

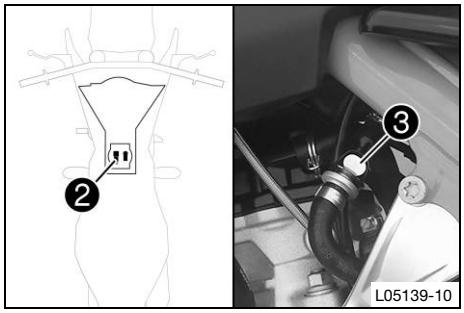

- Unplug socket connector ❷ of the fuel pump.
- Clean quick-lock coupling ❸ thoroughly with compressed air.

Dust must not enter the fuel line. Dirt in the fuel line clogs the injector!

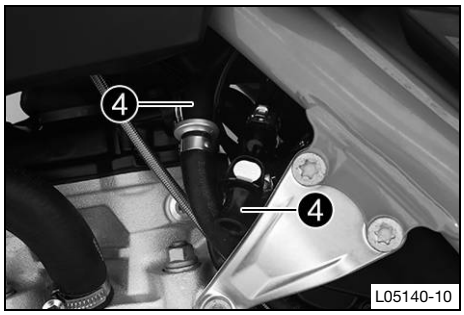

- Disconnect the quick-lock coupling.

Note

Remaining fuel may flow out of the fuel line.

- Mount wash cap set ❹.

Wash cap set (81212016100)

- Pull the fuel tank vent hose off the fuel tank cap.

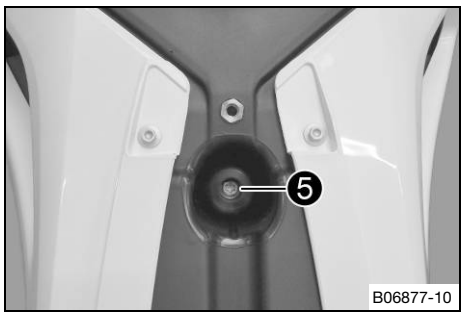

– Remove screw ❺ with the rubber bushing.

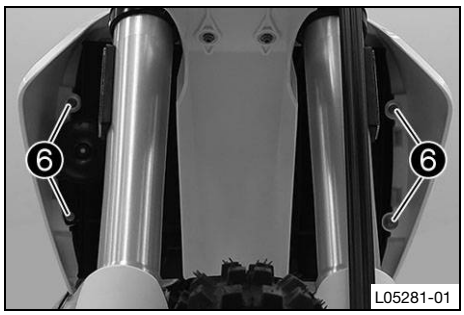

– Remove screws ❻ with the collar bushings.
– Hang the horn and horn bracket to one side.

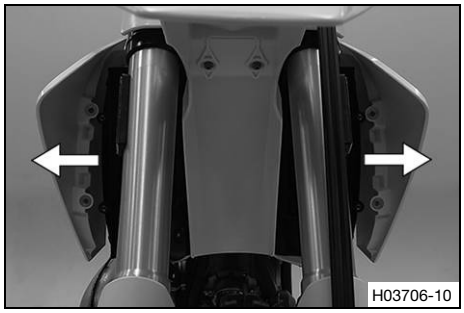

– Pull both spoilers laterally off the radiator and lift off the fuel tank.

12.33 Installing the fuel tank

DANGER
Fire hazard Fuel is highly flammable.
The fuel in the fuel tank expands when warm and can escape if overfilled.
– Do not refuel the vehicle in the vicinity of open flames, glowing, or smoldering objects.
– Make sure that nobody smokes in the vicinity of the vehicle during the refueling process.
– Switch off the engine for refueling.
– Make sure that no fuel is spilled; particularly not on hot parts of the vehicle.
– If any fuel is spilled, wipe it up immediately.
– Do not overfill the fuel tank.

WARNING
Danger of poisoning Fuel is harmful to health.
– Do not allow fuel to come into contact with skin, eyes, or clothing.
– Consult a doctor immediately if fuel has been ingested.
– Do not inhale fuel vapors.
– Rinse the affected area immediately with plenty of water in the event of contact with skin.
– Rinse eyes thoroughly with water and consult a doctor immediately if fuel comes into contact with eyes.
– If fuel spills on to your clothing, change the clothing.
– Store fuel properly in a suitable container and keep out of the reach of children.

NOTE

Environmental hazard Improper handling of fuel is dangerous to the environment.

– Do not allow fuel to enter the groundwater, the soil, or the sewage system.

Main work

– Check the throttle cable routing. (p. 94)

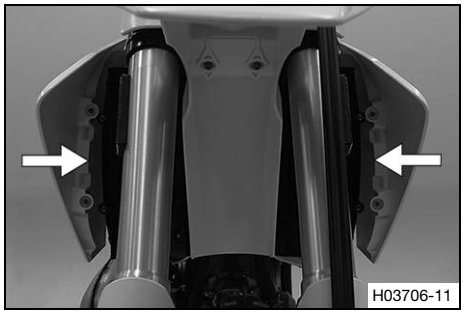

– Position the fuel tank and fit the two spoilers to the sides in front of the radiator bracket.

Make sure that no wires or cables are trapped or damaged.

– Attach the fuel tank vent hose to the fuel tank cap.

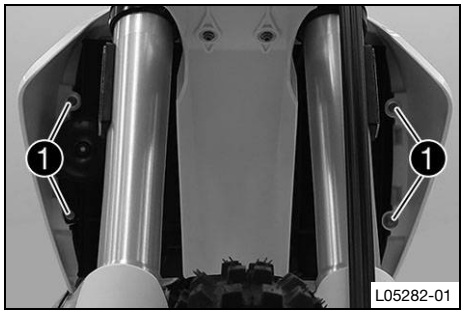

– Position the horn with the horn bracket.
– Mount and tighten screws ❶ with the collar bushings.

Screw, fuel tank spoiler on radiator	
M6	6 Nm (4.4 ft·lb$_f$)

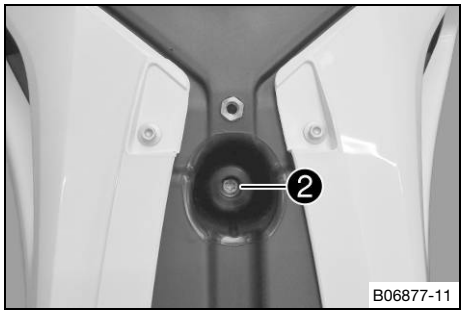

– Mount and tighten screw ❷ with the rubber bushing.

Remaining screws on chassis	
M6	10 Nm (7.4 ft·lb$_f$)

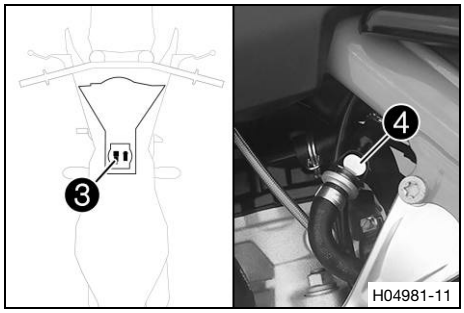

– Plug in fuel pump socket connector ❸.
– Remove the wash cap set.
– Clean the quick release coupling thoroughly with compressed air.

Dust must not enter the fuel line. Dirt in the fuel line clogs the injector!

– Spray silicone spray onto a lint-free cleaning cloth and lightly lubricate the O-ring of the quick-lock coupling.

Silicone spray (p. 176)

– Join quick release coupling ❹.

Route the wire and fuel line at a safe distance from the exhaust system.

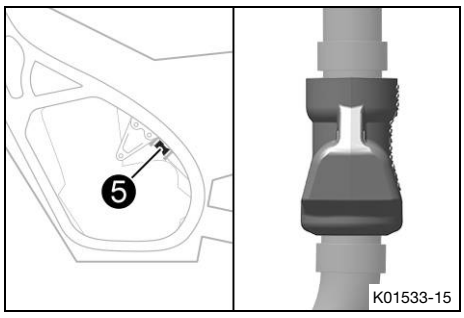

– Mount protection cap ❺ of the fuel line.

Reworking

– Mount the seat. (p. 79)

12.34 Checking the chain for dirt

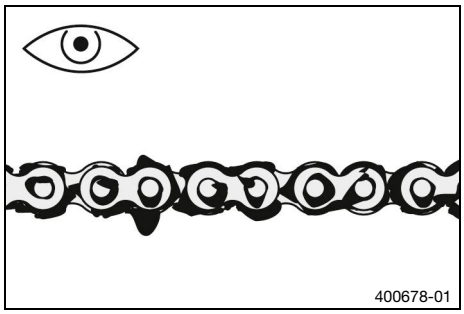

– Check the chain for coarse dirt accumulation.
  » If the chain is very dirty:
    – Clean the chain. (p. 89)

12.35 Cleaning the chain

WARNING
Danger of accidents Oil, grease or wax on the brake discs reduces the brake action.
– Always keep the brake discs free of oil, fat and wax.
– Clean the brake discs with brake cleaner when necessary.

WARNING
Danger of accidents Lubricants on the tires reduces the road grip.
– Remove lubricants from the tires using a suitable cleaning agent.

NOTE
Environmental hazard Hazardous substances cause environmental damage.
– Dispose of oils, grease, filters, fuel, cleaning agents, brake fluid, etc. correctly and in accordance with the applicable regulations.

Note
The service life of the chain depends largely on its maintenance.

Preparatory work

– Raise the motorcycle with a lift stand. (p. 64)

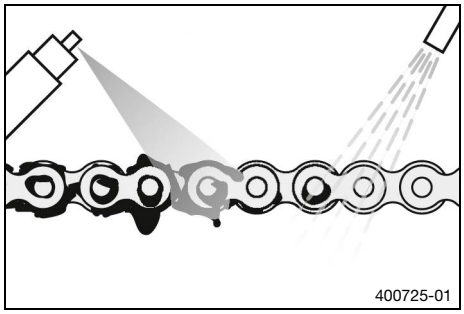

Main work

– Rinse off the loose dirt with a gentle jet of water.
– Remove old grease residues with a chain cleaner.

Chain cleaner (p. 178)

– After drying, apply chain spray.

Off-road chain spray (p. 175)

Reworking

– Remove the motorcycle from the lift stand. (p. 64)

12.36 Checking the chain tension

WARNING

Danger of accidents Incorrect chain tension can damage components and result in an accident.

If the chain is tension is too high, the chain, front sprocket, rear sprocket, transmission, and rear wheel bearings wear more quickly. Some components may break if overloaded.

If the chain is too loose, the chain may fall off the front sprocket or the rear sprocket. This can damage the rear wheel or the engine.

– Check the chain tension regularly.
– Set the chain tension in accordance with the specification.

Preparatory work

– Raise the motorcycle with a lift stand. (p. 64)

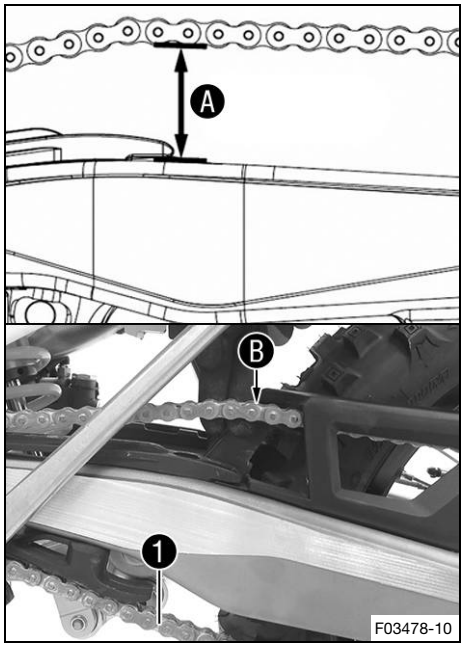

Main work

– Pull the chain at the end of the chain slider upward to measure chain tension A.

Chain tension	58 mm … 61 mm (2.28 in … 2.40 in)
Lower chain section 1 must be taut.	
When the chain guard is mounted, it must be possible to pull up the chain at least to the point where it makes contact with chain guard B.	
Chain wear is not always even, so repeat this measurement at different positions on the chain.	

» If the chain tension does not meet the specification:
  – Adjust the chain tension. (p. 91)

Reworking

– Remove the motorcycle from the lift stand. (p. 64)

12.37 Adjusting the chain tension

WARNING

Danger of accidents Incorrect chain tension can damage components and result in an accident.

If the chain is tension is too high, the chain, front sprocket, rear sprocket, transmission, and rear wheel bearings wear more quickly. Some components may break if overloaded.

If the chain is too loose, the chain may fall off the front sprocket or the rear sprocket. This can damage the rear wheel or the engine.

– Check the chain tension regularly.
– Set the chain tension in accordance with the specification.

Preparatory work

– Raise the motorcycle with a lift stand. (p. 64)
– Check the chain tension. (p. 90)

Main work

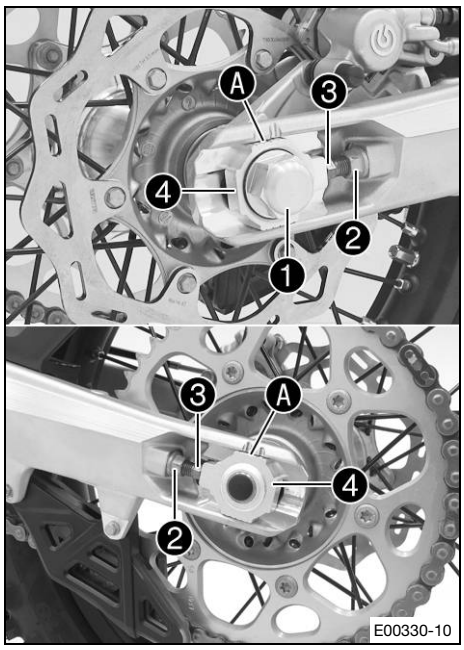

– Loosen nut ❶.
– Loosen nuts ❷.
– Adjust the chain tension by turning adjusting screws ❸ on the left and right.

Chain tension	58 mm … 61 mm (2.28 in … 2.40 in)
Turn adjusting screws ❸ on the left and right so that the markings on the left and right chain tension adjusters are in the same position relative to reference marks Ⓐ. The rear wheel is then correctly aligned.	

– Tighten nuts ❷.
– Make sure that chain tension adjusters ❹ are fitted correctly on adjusting screws ❸.
– Tighten nut ❶.

Nut, wheel spindle, rear	
M22	80 Nm (59.0 ft·lb$_f$)

Note

The wide adjustment range of the chain adjusters enables different secondary ratios with the same chain length.

Chain tension adjusters ❹ can be turned by 180°.

Reworking

– Check the chain tension. (p. 90)
– Remove the motorcycle from the lift stand. (p. 64)

12.38 Checking the chain, rear sprocket, front sprocket, and chain guide

Preparatory work

– Raise the motorcycle with a lift stand. (p. 64)

Main work

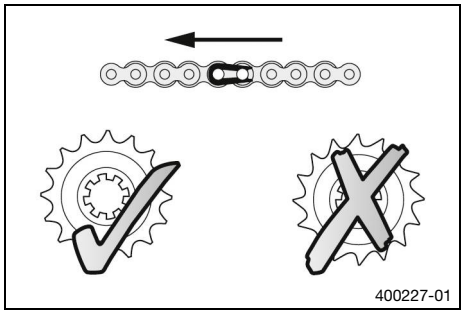

– Shift the transmission into the neutral position.
– Check the chain, rear sprocket, and front sprocket for wear.
  » If the chain, rear sprocket, or front sprocket is worn:
    – Change the drivetrain kit.

Always replace the front sprocket, rear sprocket, and chain together.

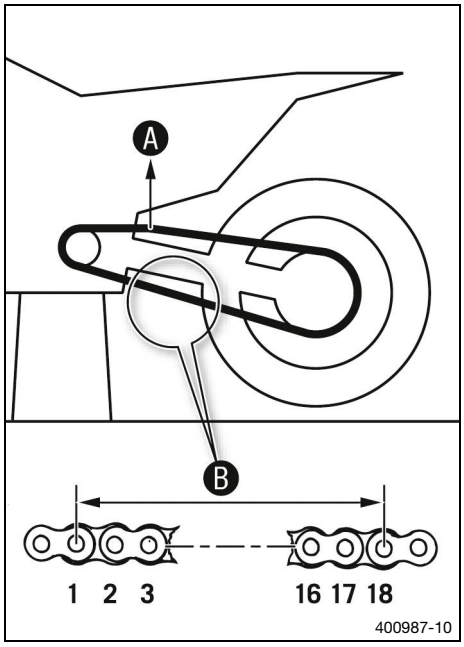

– Pull on the top section of the chain with the specified weight A.

Weight, chain wear measurement	10 kg … 15 kg (22.0 lb … 33.1 lb)

– Measure distance B of chain rollers in the lower chain section.

Maximum distance B of chain rollers at the longest chain section	272 mm (10.71 in)
Chain wear is not always even, so repeat this measurement at different positions on the chain.	

  » If distance B is greater than the specified measurement:
    – Change the drivetrain kit.

When installing a new chain, also replace the rear sprocket and front sprocket.

Note

New chains wear out faster on old, worn sprockets.

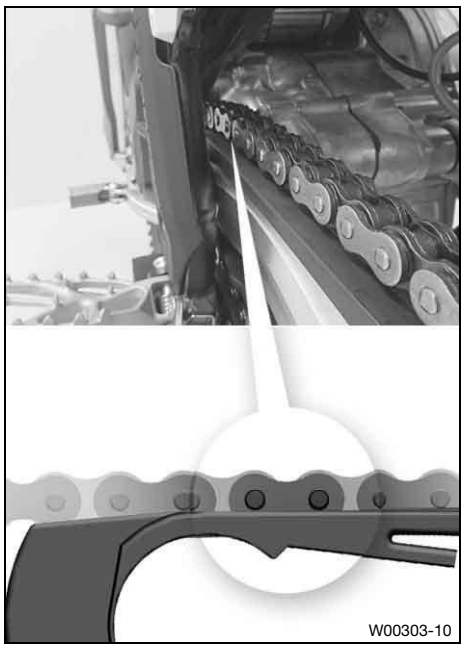

– Check the chain slider at the top for wear.
  » If the lower edge of the chain pins is in line with, or below, the chain slider:
    – Change the chain slider.
– Check that the chain slider is firmly seated.
  » If the chain slider is loose:
    – Tighten the screws of the chain slider.

Screw, chain slider guard	
M6	6 Nm (4.4 ft·lb$_f$) **Loctite® 243**

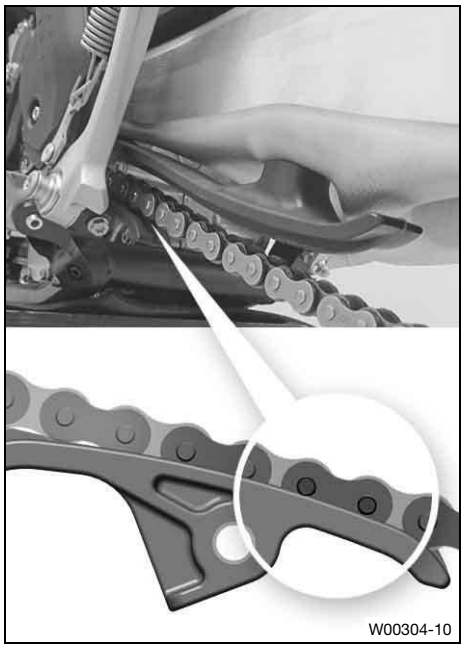

– Check the chain slider for wear.
  » If the lower edge of the chain pins is in line with or below the chain slider:
    – Change the chain slider.
– Check that the chain slider is firmly seated.
  » If the chain slider is loose:
    – Tighten the screw of the chain sliding piece.

Screw, chain slider	
M8	15 Nm (11.1 ft·lb$_f$)

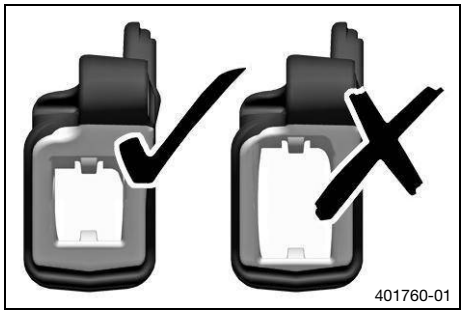

– Check the chain guide for wear.

Note
Wear can be seen on the front of the chain guide.

  » If the light part of the chain guide is worn:
    – Change the chain guide.

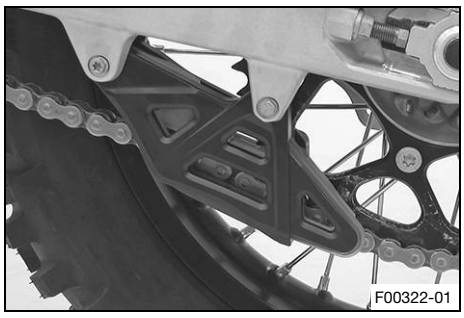

– Check that the chain guide is firmly seated.
  » If the chain guide is loose:
    – Tighten the screws on the chain guide.

Remaining screws on chassis	
M6	10 Nm (7.4 ft·lb$_f$)
Remaining nuts on chassis	
M6	10 Nm (7.4 ft·lb$_f$)

Reworking

– Remove the motorcycle from the lift stand. (p. 64)

12.39 Checking the frame

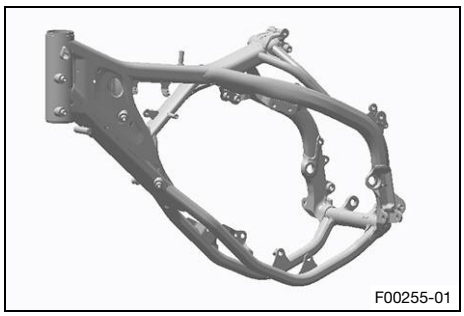

– Check the frame for damage, cracks, and deformation.
  » If the frame shows signs of damage, cracks, or deformation:
    – Change the frame.

Repairs on the frame are not permitted.

12.40 Checking the swingarm

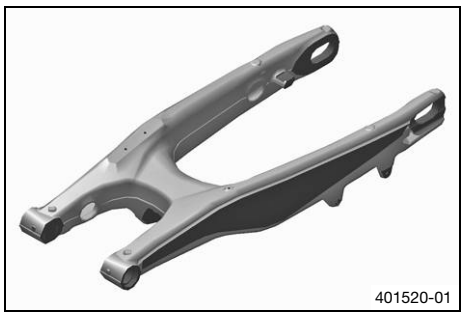

– Check the swingarm for damage, cracks, and deformation.
  » If the swingarm shows signs of damage, cracks, or deformation:
    – Change the swingarm.

Always replace a damaged link fork.

12.41 Checking the throttle cable routing

WARNING

Danger of accidents The throttle cable can become kinked, jammed, or blocked if it has been routed incorrectly.

If the throttle cable is kinked, jammed or blocked, the speed can no longer be controlled.

– Make sure that the throttle cable routing and the play in the throttle cable complies with the specification.

Preparatory work

– Remove the seat. (p. 79)
– Remove the fuel tank. (p. 85)

Main work

– Check the throttle cable routing.

> Both throttle cables must be routed, side by side, on the back of the handlebars and above the fuel tank bracket, to the throttle valve body. Both throttle cables must be secured behind the rubber strap of the fuel tank support.

» If the throttle cable routing is not as specified:
  – Correct the throttle cable routing.

Reworking

– Install the fuel tank. (p. 87)
– Mount the seat. (p. 79)

12.42 Checking the hand grip

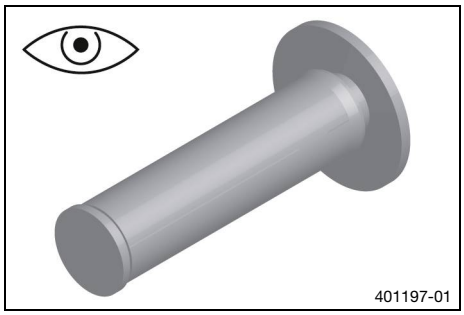

– Check the hand grips on the handlebar for damage, wear, and that they are firmly seated.

Note

The hand grips are vulcanized onto a sleeve on the left and onto the grip tube of the throttle grip on the right. The left sleeve is clamped onto the handlebar.

The hand grip can only be replaced with the sleeve or the gas pipe.

» If a rubber grip is damaged, worn, or loose:
  – Replace the hand grip.

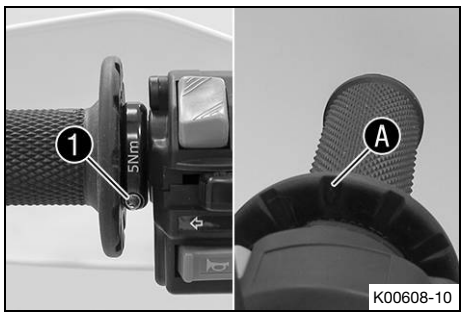

– Check that screw ❶ is firmly seated.

Screw, fixed grip	
M4	5 Nm (3.7 ft·lb$_f$) **Loctite® 243**

Diamond Ⓐ must be located at the top.

12.43 Program the Quickshifter

Note
If the shifting performance of the Quickshifter starts to decrease, it must be reprogrammed.

– Carry out the starting procedure. (p. 45)
– Press and hold the QS button ❶ for at least 10 seconds.
  ✓ The QS indicator lamp flashes.
– Pull the clutch lever, engage first-gear and hold the shift lever all the way down.
– Briefly press the QS button ❶.
  ✓ The QS indicator lamp lights up blue, the teaching procedure was successful.

Note
If the quickshifter cannot be activated, the teaching procedure was unsuccessful and must be repeated.

12.44 Checking/correcting the fluid level of hydraulic clutch

WARNING
Health hazard Brake fluid is a harmful substance.
– Keep brake fluid out of the reach of children.
– Wear suitable protective clothing and safety glasses.
– Do not allow brake fluid to come into contact with the skin, the eyes, or clothing.
– Consult a doctor immediately if brake fluid has been ingested.
– Rinse the affected area with plenty of water in the event of contact with the skin.
– Rinse eyes thoroughly with water immediately and consult a doctor if brake fluid comes into contact with the eyes.
– If brake fluid spills on to your clothing, change the clothing.

NOTE
Environmental hazard Hazardous substances cause environmental damage.
– Dispose of oils, grease, filters, fuel, cleaning agents, brake fluid, etc. correctly and in accordance with the applicable regulations.

Note
The fluid level rises with increasing wear of the friction plates.
Avoid contact between brake fluid and painted parts. Brake fluid corrodes paint.

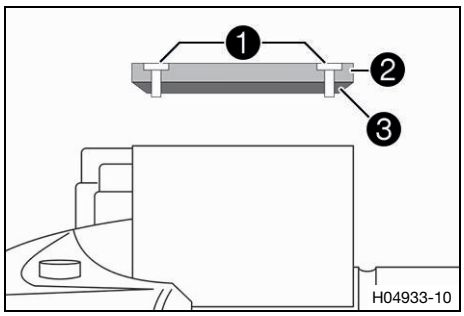

– Move the hydraulic clutch fluid reservoir mounted on the handlebar into a horizontal position.
– Remove screws ❶.
– Take off cover ❷ with membrane ❸.
– Check the fluid level.

Fluid level below reservoir rim	4 mm (0.16 in)

» If the fluid level does not meet the specifications:
  – Correct the fluid level of the hydraulic clutch.

Brake fluid DOT 5.1 (p. 176)

– Position cover ❷ with membrane ❸.
– Mount and tighten screws ❶.

Immediately clean up any brake fluid that has overflowed or spilled using water.

12.45 Adjusting the basic position of the clutch lever

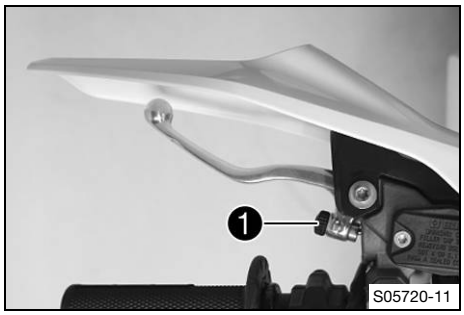

– Adjust the basic position of the clutch lever to your hand size by turning adjusting screw ❶.

Only turn the adjusting screw by hand, and do not use force.
Do not make any adjustments while riding.

Note
When the adjusting screw is turned clockwise, the clutch lever moves away from the handlebar.
When the adjusting screw is turned counterclockwise, the clutch lever moves closer to the handlebar.
The range of adjustment is limited.

12.46 Changing the hydraulic clutch fluid

WARNING
Health hazard Brake fluid is a harmful substance.
– Keep brake fluid out of the reach of children.
– Wear suitable protective clothing and safety glasses.
– Do not allow brake fluid to come into contact with the skin, the eyes, or clothing.
– Consult a doctor immediately if brake fluid has been ingested.
– Rinse the affected area with plenty of water in the event of contact with the skin.
– Rinse eyes thoroughly with water immediately and consult a doctor if brake fluid comes into contact with the eyes.
– If brake fluid spills on to your clothing, change the clothing.

NOTE

Environmental hazard Hazardous substances cause environmental damage.

– Dispose of oils, grease, filters, fuel, cleaning agents, brake fluid, etc. correctly and in accordance with the applicable regulations.

Note

Avoid contact between brake fluid and painted parts. Brake fluid corrodes paint.

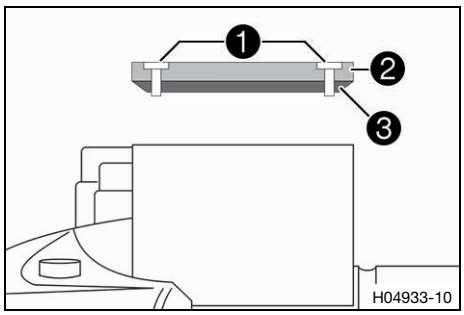

– Move the hydraulic clutch fluid reservoir mounted on the handlebar into a horizontal position.
– Remove ❶ screws.
– Take off cover ❷ with diaphragm ❸.

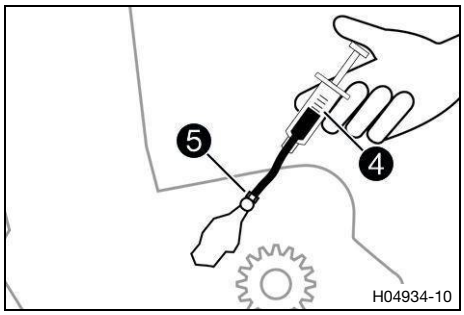

– Fill bleeding syringe ❹ with the appropriate hydraulic fluid.

Syringe (50329050000)
Brake fluid DOT 5.1 (p. 176)

– On the clutch slave cylinder, remove the protection cap, remove bleeder screw ❺ and mount bleeding syringe ❹.

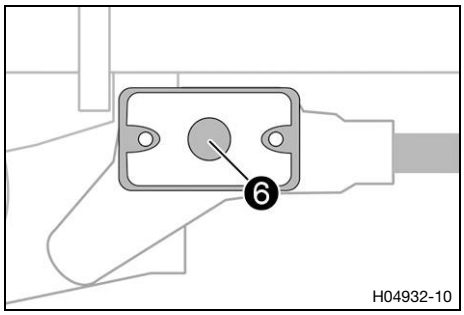

– Keep pumping the fluid into the system until it comes out of openings ❻ of the master cylinder without bubbles.
– Occasionally extract the fluid from the master cylinder reservoir to prevent overflowing.
– Remove the bleeding syringe.
– Mount and tighten the bleeder screw.
– Mount the protection cap.
– Correct the fluid level of the hydraulic clutch.

Fluid level below reservoir rim	4 mm (0.16 in)

– Position the cover with diaphragm.
– Mount and tighten the screws.

Immediately clean up any brake fluid that has overflowed or spilled with water.

12.47 Removing the skid plate

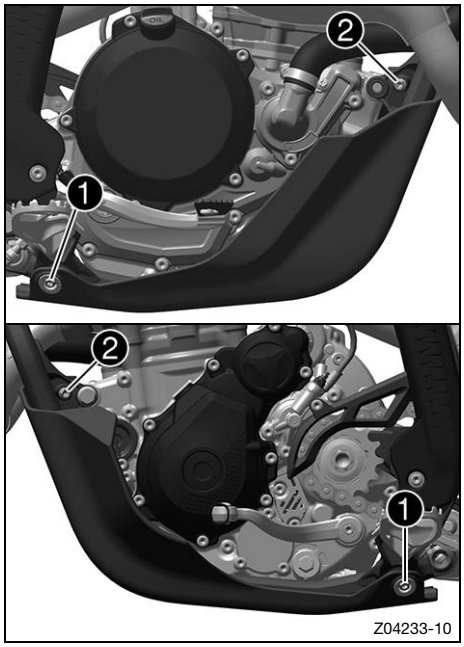

– Remove screws ❶ and bushings.
– Remove screws ❷. Take off the skid plate.

12.48 Installing the skid plate

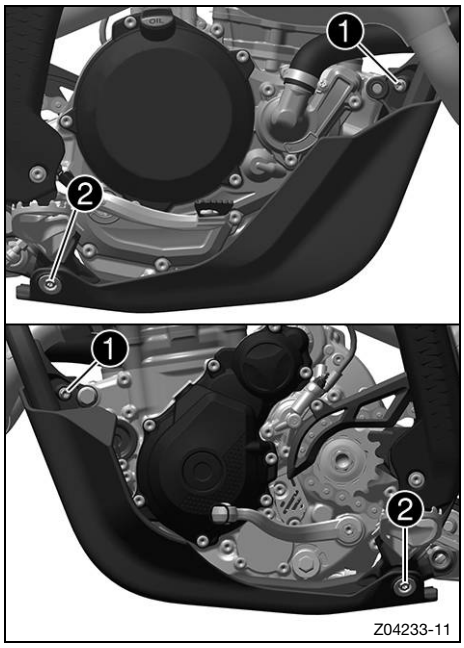

– Position the skid plate on the frame.
– Mount screws ❶, but do not tighten yet.

Remaining screws on chassis	
M6	10 Nm (7.4 ft·lb$_f$)

– Mount screws ❷ with bushings, but do not tighten yet.

Remaining screws on chassis	
M6	10 Nm (7.4 ft·lb$_f$)

✓ The skid plate is directed evenly toward the front.
– Tighten all the screws of the skid plate.

Remaining screws on chassis	
M6	10 Nm (7.4 ft·lb$_f$)

13.1 Checking the free travel on the hand brake lever

WARNING
Danger of accidents The brake system fails in the event of overheating.
If there is no free travel on the brake lever, pressure builds up in the brake system.
– Set the free travel on the brake lever as specified.

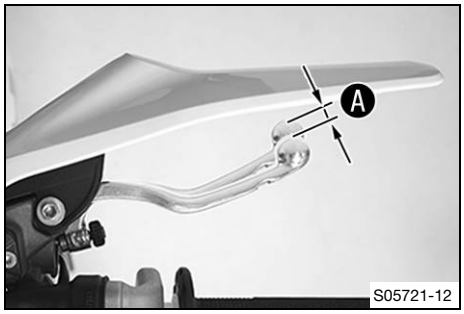

– Push the hand brake lever to the handlebar and check free travel A.

Free travel of hand brake lever	≥ 3 mm (≥ 0.12 in)

» If the free travel does not meet the specifications:
  – Adjust the free travel of the handbrake lever. (p. 100)

13.2 Adjusting the free travel of the handbrake lever

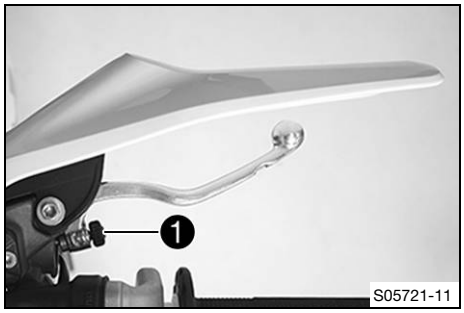

– Check the free travel on the hand brake lever. (p. 100)
– Adjust the free travel of the hand brake lever with adjusting screw 1.

Only turn the adjusting screw by hand, and do not use force.
Do not make any adjustments while riding.

Note
The range of adjustment is limited.
Turn the adjusting screw clockwise to reduce free travel. The pressure point moves away from the handlebar.
Turn the adjusting screw counterclockwise to increase free travel. The pressure point moves towards the handlebar.

13.3 Checking the brake discs

WARNING
Danger of accidents Worn-out brake discs reduce the braking action.
– Make sure that worn-out brake discs are replaced immediately.

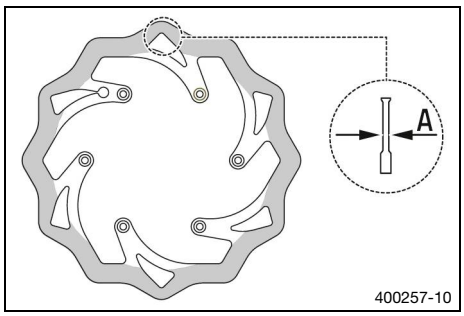

– Check the brake disc thickness of the front and rear brake disc at several places on the disc to see if they conform to measurement Ⓐ.

Brake disc wear limit	
(All standard models)	
front	2.5 mm (0.098 in)
rear	3.5 mm (0.138 in)
(All special models)	
front	2.5 mm (0.098 in)
rear	3.7 mm (0.146 in)

Note
Wear reduces the thickness of the brake discs at the contact surface of the brake pads.

» If the brake disc thickness is less than the specified value:
  – Change the brake discs of the front brake.
  – Change the brake discs on the rear brake.

– Check the front and rear brake discs for damage, cracks, and deformation.
  » If the brake disc shows signs of damage, cracks, or deformation:
    – Change the brake discs of the front brake.
    – Change the brake discs on the rear brake.

13.4 Checking the brake fluid level for the front brake

WARNING
Danger of accidents Brake fluid which is too old or of the wrong type impairs the function of the brake system.
– Make sure that brake fluid for the front and rear brake is changed in accordance with the service schedule.
– Make sure that only clean, approved brake fluid from a tightly sealed container is used.

WARNING
Danger of accidents An insufficient brake fluid level will cause the brake system to fail.
If the brake fluid level drops below the specified marking or the specified value, the brake system has a leak or the brake pads are worn down.
– Have the brake system checked and make sure that the problem has been eliminated before the vehicle is used again.

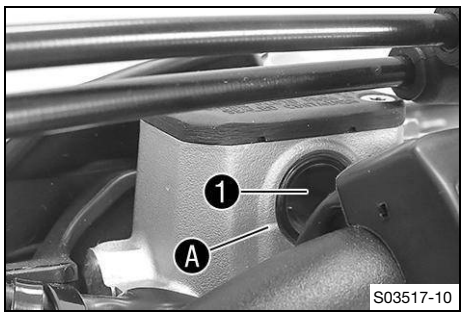

– Move the brake reservoir mounted on the handlebar to a horizontal position.
– Check the brake fluid level in sight glass 1.
  » If the brake fluid level has fallen below marking A:
    – Add brake fluid for the front brake. (p. 102)

13.5 Adding brake fluid for the front brake

WARNING
Danger of accidents Brake fluid which is too old or of the wrong type impairs the function of the brake system.
– Make sure that brake fluid for the front and rear brake is changed in accordance with the service schedule.
– Make sure that only clean, approved brake fluid from a tightly sealed container is used.

WARNING
Danger of accidents An insufficient brake fluid level will cause the brake system to fail.
If the brake fluid level drops below the specified marking or the specified value, the brake system has a leak or the brake pads are worn down.
– Have the brake system checked and make sure that the problem has been eliminated before the vehicle is used again.

WARNING
Health hazard Brake fluid is a harmful substance.
– Keep brake fluid out of the reach of children.
– Wear suitable protective clothing and safety glasses.
– Do not allow brake fluid to come into contact with the skin, the eyes, or clothing.
– Consult a doctor immediately if brake fluid has been ingested.
– Rinse the affected area with plenty of water in the event of contact with the skin.
– Rinse eyes thoroughly with water immediately and consult a doctor if brake fluid comes into contact with the eyes.
– If brake fluid spills on to your clothing, change the clothing.

NOTE
Environmental hazard Hazardous substances cause environmental damage.
– Dispose of oils, grease, filters, fuel, cleaning agents, brake fluid, etc. correctly and in accordance with the applicable regulations.

Note
Avoid contact between brake fluid and painted parts. Brake fluid corrodes paint.

Preparatory work
– Check that the brake pads of the front brake are secured. (p. 103)

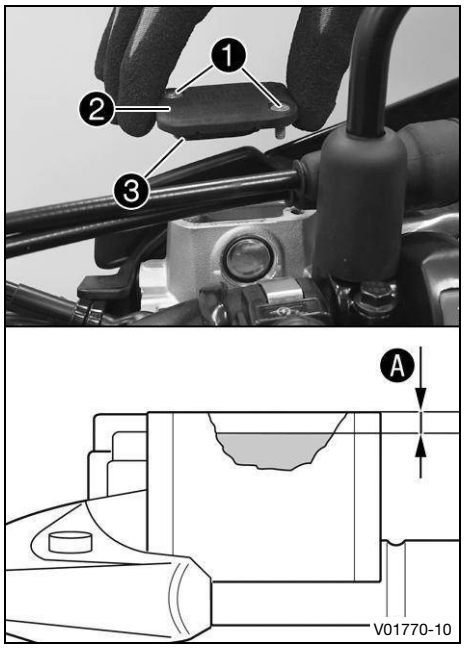

Main work

- Move the brake reservoir mounted on the handlebar to a horizontal position.
- Remove screws ❶.
- Take off cover ❷ with membrane ❸.
- Add brake fluid to level Ⓐ.

Level Ⓐ (brake fluid level below reservoir rim)	5 mm (0.20 in)

Brake fluid DOT 5.1 (p. 176)

- Position cover ❷ with membrane ❸.
- Mount and tighten screws ❶.

Immediately clean up any brake fluid that has overflowed or spilled using water.

13.6 Checking that the brake pads of the front brake are secured

WARNING
Danger of accidents Worn brake pads reduce the brake action.
- Make sure that worn brake pads are replaced immediately.

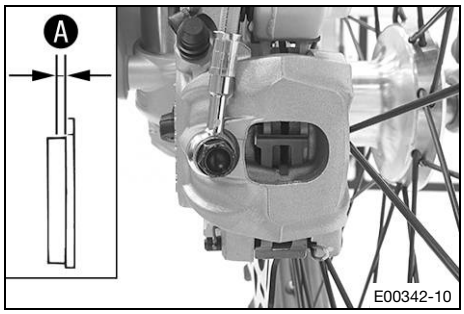

- Check all brake pads on both brake calipers for their lining thickness Ⓐ.

Minimum pad thickness Ⓐ	≥ 1 mm (≥ 0.04 in)

  » If it is less than the minimum thickness:
    - Change the front brake pads. (p. 104)
- Check the brake linings for damage and cracking.
  » If there is damage or cracking:
    - Change the front brake pads. (p. 104)
- Check that the brake pads are secured.
  » If the brake pads are not secured correctly:
    - Secure brake pads, replace with new parts if necessary.

13.7 Changing the brake pads of the front brake

WARNING
Danger of accidents Brake pads which have not been approved alter the braking action.
– Only use brake pads approved and recommended by the vehicle manufacturer.

WARNING
Danger of accidents Incorrect servicing will cause the brake system to fail.
– Ensure that service work and repairs are performed professionally.

WARNING
Danger of accidents Brake fluid which is too old or of the wrong type impairs the function of the brake system.
– Make sure that brake fluid for the front and rear brake is changed in accordance with the service schedule.
– Make sure that only clean, approved brake fluid from a tightly sealed container is used.

WARNING
Danger of accidents Oil, grease or wax on the brake discs reduces the brake action.
– Always keep the brake discs free of oil, fat and wax.
– Clean the brake discs with brake cleaner when necessary.

WARNING
Health hazard Brake fluid is a harmful substance.
– Keep brake fluid out of the reach of children.
– Wear suitable protective clothing and safety glasses.
– Do not allow brake fluid to come into contact with the skin, the eyes, or clothing.
– Consult a doctor immediately if brake fluid has been ingested.
– Rinse the affected area with plenty of water in the event of contact with the skin.
– Rinse eyes thoroughly with water immediately and consult a doctor if brake fluid comes into contact with the eyes.
– If brake fluid spills on to your clothing, change the clothing.

NOTE
Environmental hazard Hazardous substances cause environmental damage.
– Dispose of oils, grease, filters, fuel, cleaning agents, brake fluid, etc. correctly and in accordance with the applicable regulations.

Note
Avoid contact between brake fluid and painted parts. Brake fluid corrodes paint.

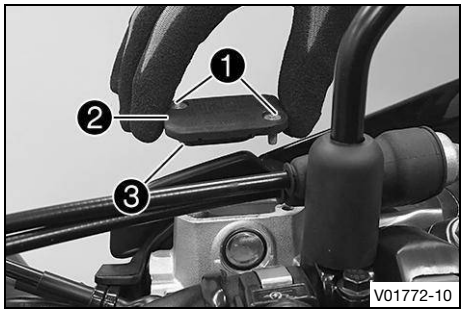

– Move the brake reservoir mounted on the handlebar to a horizontal position.
– Remove screws ❶.
– Take off cover ❷ with diaphragm ❸.
– Manually press the brake caliper toward the brake disc to push back the brake pistons.
– Ensure that brake fluid does not flow out of the brake fluid reservoir; extract some if necessary.

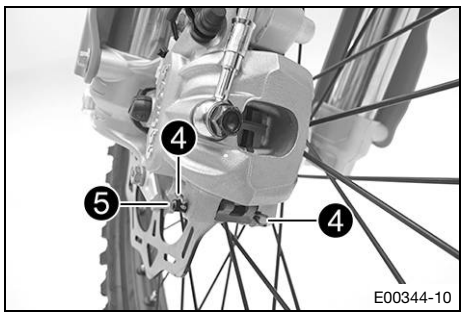

– Remove cotter pin ❹.
– Pull out pin ❺.
– Remove the brake pads.
– Clean brake caliper and brake caliper support.

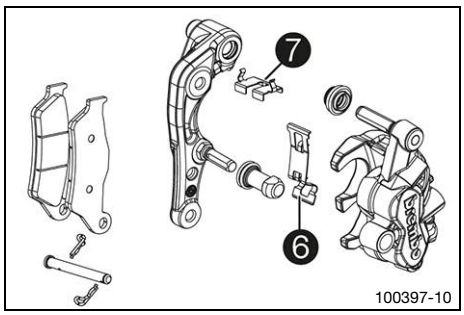

– Check that spring steel clip ❻ in the brake caliper and brake pad guide plate ❼ in the brake caliper support are properly seated.

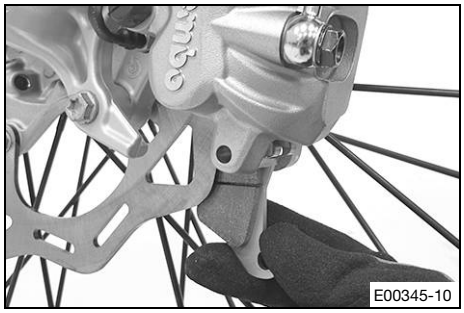

– Insert the new brake linings, insert the pin, and mount the cotter pins.

Always replace brake pads in sets.
Make sure the brake pads and retaining spring are properly seated.
Mount the outer cotter pins from the front to the rear. Mount the inner cotter pins from the rear to the front.

Tip
To make it easier to mount the stud, push the brake pads upward against the retaining spring.

– Operate the hand brake lever repeatedly until the brake pads are in contact with the brake disc and a pressure point is reached.

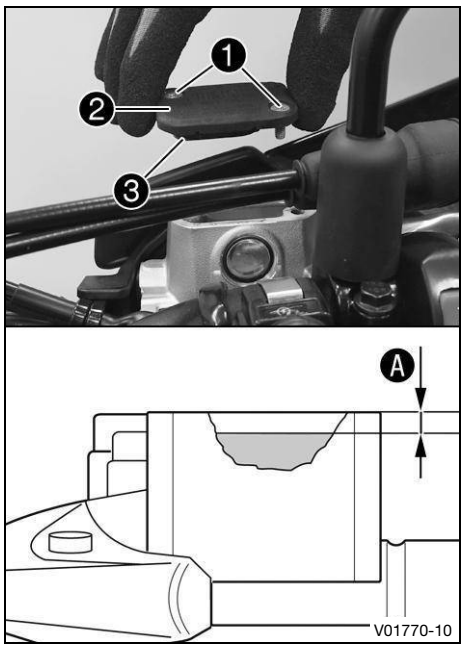

– Correct the brake fluid level to level A.

Level A (brake fluid level below reservoir rim)	5 mm (0.20 in)

Brake fluid DOT 5.1 (p. 176)

– Position cover 2 with diaphragm 3. Mount and tighten screws 1.

Immediately clean up any brake fluid that has overflowed or spilled with water.

13.8 Checking the free travel of the brake pedal

WARNING
Danger of accidents The brake system fails in the event of overheating.
If there is no free travel on the brake lever, pressure builds up in the brake system.
– Set the free travel on the brake lever as specified.

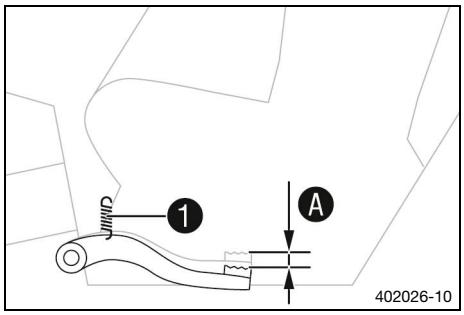

– Detach spring 1.
– Move the brake pedal back and forth between the end stop and the brake pedal cylinder piston actuation and check free travel A.

Free travel of brake pedal	3 mm … 5 mm (0.12 in … 0.20 in)

» If the free travel does not meet the specifications:
  – Adjust the basic position of the brake pedal. (p. 106)

– Attach spring 1.

13.9 Adjusting the basic position of the brake pedal

WARNING
Danger of accidents The brake system fails in the event of overheating.
If there is no free travel on the brake lever, pressure builds up in the brake system.
– Set the free travel on the brake lever as specified.

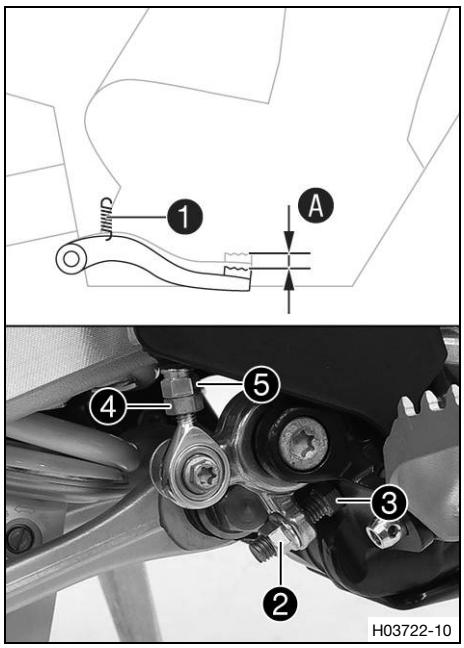

– Detach spring ❶.
– Loosen nut ❹ and unscrew it with push rod ❺ until you have maximum free travel.
– To adjust the basic position of the brake pedal to individual requirements, loosen nut ❷ and turn screw ❸ accordingly.

Note
The range of adjustment is limited.

– Turn push rod ❺ accordingly until you have free travel Ⓐ. If necessary, adjust the basic position of the brake pedal.

Free travel of brake pedal	3 mm … 5 mm (0.12 in … 0.20 in)

– Hold screw ❸ and tighten nut ❷.

Brake pedal stop nut	
M8	20 Nm (14.8 ft·lb$_f$)

– Hold push rod ❺ and tighten nut ❹.

Remaining nuts on chassis	
M6	10 Nm (7.4 ft·lb$_f$)

– Attach spring ❶.

13.10 Checking the brake fluid level for the rear brake

WARNING
Danger of accidents Brake fluid which is too old or of the wrong type impairs the function of the brake system.
– Make sure that brake fluid for the front and rear brake is changed in accordance with the service schedule.
– Make sure that only clean, approved brake fluid from a tightly sealed container is used.

WARNING
Danger of accidents An insufficient brake fluid level will cause the brake system to fail.
If the brake fluid level drops below the specified marking or the specified value, the brake system has a leak or the brake pads are worn down.
– Have the brake system checked and make sure that the problem has been eliminated before the vehicle is used again.

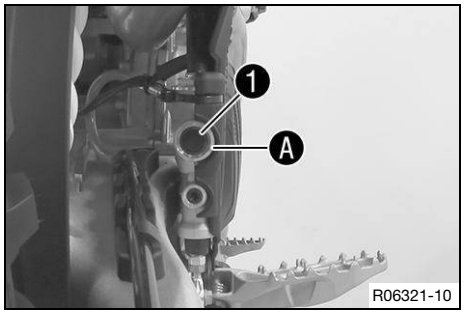

– Stand the vehicle upright.
– Check the brake fluid level in sight glass ❶.
» If the brake fluid level has fallen below marking Ⓐ:
– Add brake fluid for the rear brake. (p. 108)

13.11 Adding brake fluid for the rear brake

WARNING
Danger of accidents Brake fluid which is too old or of the wrong type impairs the function of the brake system.
- Make sure that brake fluid for the front and rear brake is changed in accordance with the service schedule.
- Make sure that only clean, approved brake fluid from a tightly sealed container is used.

WARNING
Danger of accidents An insufficient brake fluid level will cause the brake system to fail.
If the brake fluid level drops below the specified marking or the specified value, the brake system has a leak or the brake pads are worn down.
- Have the brake system checked and make sure that the problem has been eliminated before the vehicle is used again.

WARNING
Health hazard Brake fluid is a harmful substance.
- Keep brake fluid out of the reach of children.
- Wear suitable protective clothing and safety glasses.
- Do not allow brake fluid to come into contact with the skin, the eyes, or clothing.
- Consult a doctor immediately if brake fluid has been ingested.
- Rinse the affected area with plenty of water in the event of contact with the skin.
- Rinse eyes thoroughly with water immediately and consult a doctor if brake fluid comes into contact with the eyes.
- If brake fluid spills on to your clothing, change the clothing.

NOTE
Environmental hazard Hazardous substances cause environmental damage.
- Dispose of oils, grease, filters, fuel, cleaning agents, brake fluid, etc. correctly and in accordance with the applicable regulations.

Note
Avoid contact between brake fluid and painted parts. Brake fluid corrodes paint.

Preparatory work
- Check that the brake pads of the rear brake are secured. (p. 109)
- Remove air filter box cover. (p. 80)
- Remove the frame protector. (p. 67)

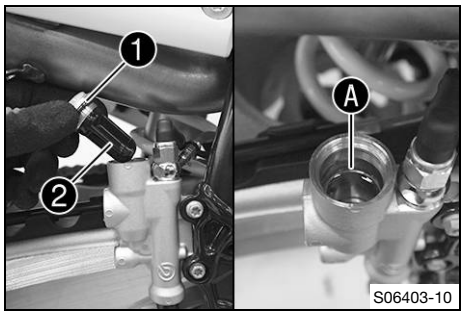

Main work
- Stand the vehicle upright.
- Remove screw cap 1 with diaphragm 2 and the O-ring.
- Add brake fluid to mark A.

  Brake fluid DOT 5.1 (p. 176)
- Mount and tighten screw cap 1 with diaphragm 2 and the O-ring.

  Immediately clean up any brake fluid that has overflowed or spilled using water.

Reworking

– Install the frame protector. (p. 67)
– Install the air filter box cover. (p. 80)

13.12 Checking that the brake pads of the rear brake are secured

WARNING
Danger of accidents Worn brake pads reduce the brake action.
– Make sure that worn brake pads are replaced immediately.

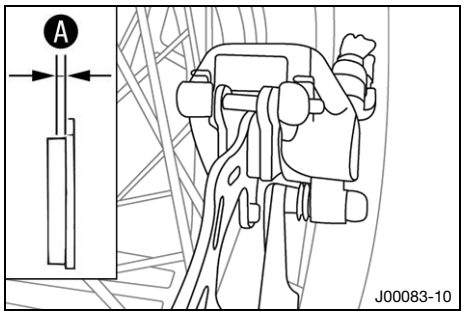

– Check all brake pads on both brake calipers for their lining thickness A.

Minimum pad thickness A	≥ 1 mm (≥ 0.04 in)

» If it is less than the minimum thickness:
  – Change the rear brake pads. (p. 109)
– Check the brake linings for damage and cracking.
» If there is damage or cracking:
  – Change the rear brake pads. (p. 109)
– Check that the brake pads are secured.
» If the brake pads are not secured correctly:
  – Secure brake pads, replace with new parts if necessary.

13.13 Changing the rear brake pads

WARNING
Danger of accidents Brake pads which have not been approved alter the braking action.
– Only use brake pads approved and recommended by the vehicle manufacturer.

WARNING
Danger of accidents Incorrect servicing will cause the brake system to fail.
– Ensure that service work and repairs are performed professionally.

WARNING
Danger of accidents Brake fluid which is too old or of the wrong type impairs the function of the brake system.
– Make sure that brake fluid for the front and rear brake is changed in accordance with the service schedule.
– Make sure that only clean, approved brake fluid from a tightly sealed container is used.

WARNING
Danger of accidents Oil, grease or wax on the brake discs reduces the brake action.
– Always keep the brake discs free of oil, fat and wax.
– Clean the brake discs with brake cleaner when necessary.

WARNING

Health hazard Brake fluid is a harmful substance.

- Keep brake fluid out of the reach of children.
- Wear suitable protective clothing and safety glasses.
- Do not allow brake fluid to come into contact with the skin, the eyes, or clothing.
- Consult a doctor immediately if brake fluid has been ingested.
- Rinse the affected area with plenty of water in the event of contact with the skin.
- Rinse eyes thoroughly with water immediately and consult a doctor if brake fluid comes into contact with the eyes.
- If brake fluid spills on to your clothing, change the clothing.

NOTE

Environmental hazard Hazardous substances cause environmental damage.

- Dispose of oils, grease, filters, fuel, cleaning agents, brake fluid, etc. correctly and in accordance with the applicable regulations.

Note

Avoid contact between brake fluid and painted parts. Brake fluid corrodes paint.

Preparatory work

- Remove air filter box cover. (p. 80)
- Remove the frame protector. (p. 67)

Main work

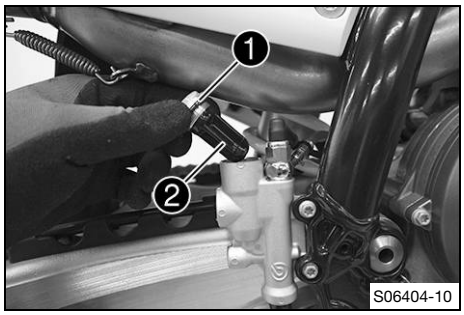

- Stand the vehicle upright.
- Remove screw cap ❶ with membrane ❷.

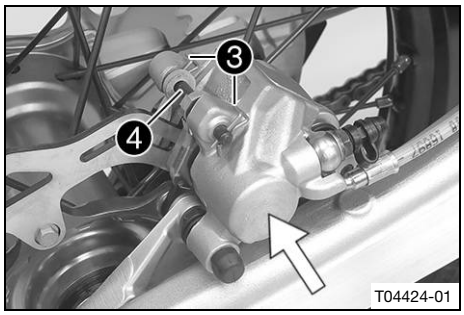

- Manually press the brake caliper toward the brake disc to push back the brake piston. Ensure that brake fluid does not flow out of the brake reservoir, and siphon off excess if required.
- Remove cotter pin ❸.
- Pull out pin ❹.
- Remove the brake pads.
- Clean brake caliper and brake caliper support.

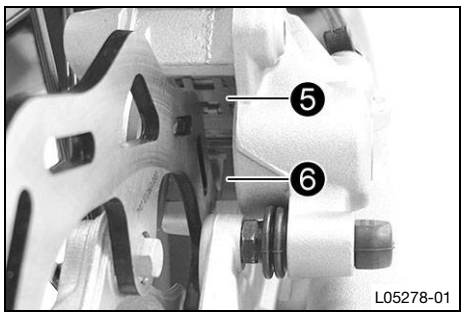

– Check that spring steel clip ❺ in the brake caliper and brake pad guide plate ❻ in the brake caliper support are properly seated.

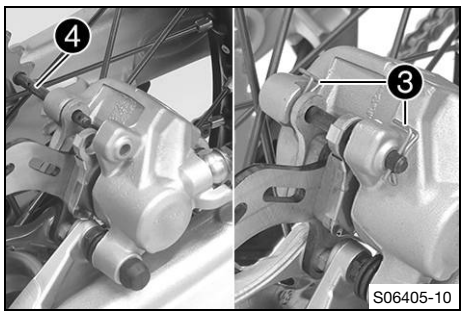

– Insert the new brake linings.

Always replace brake pads in sets.

– Mount bolt ❹.
  ✓ The spring plate engages in the groove on the pin.
– Mount cotter pins ❸.
– Actuate the brake disc repeatedly until the brake pads are in contact with the brake disc and a pressure point is achieved.

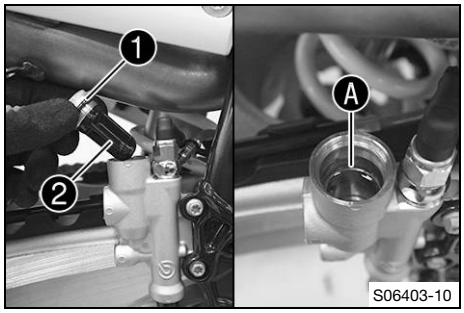

– Correct the brake fluid level to mark Ⓐ.

Brake fluid DOT 5.1 (p. 176)

– Mount and tighten screw cap ❶ with membrane ❷.

Immediately clean up any brake fluid that has overflowed or spilled using water.

Reworking

– Install the frame protector. (p. 67)
– Install the air filter box cover. (p. 80)

14.1 Removing the front wheel

Preparatory work

– Raise the motorcycle with a lift stand. (p. 64)

Main work

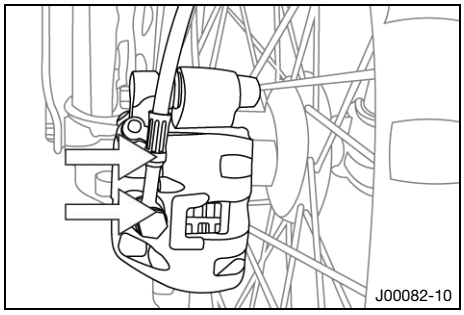

– Manually press the brake caliper toward the brake disc to push back the brake pistons.

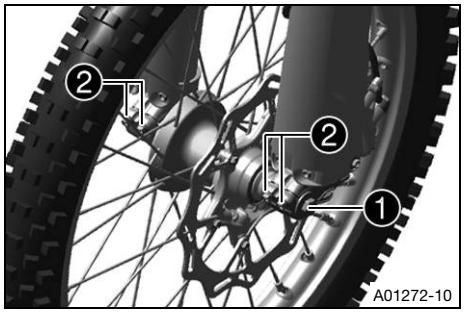

– Loosen screw ❶ by four turns.
– Loosen screws ❷.
– Press on screw ❶ to push the wheel spindle out of the axle clamp.
– Remove screw ❶.

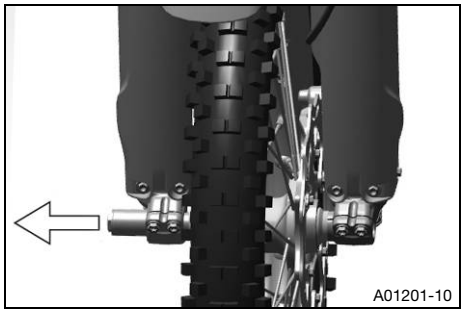

WARNING

Danger of accidents Damaged brake discs reduce the braking action.

– Always lay the wheel down in such a way that the brake disc is not damaged.

– Hold front wheel and remove wheel spindle. Take the front wheel out of the fork.

> Do not actuate the hand brake lever when the front wheel is removed.

(All standard models)

– Remove spacers ❸.

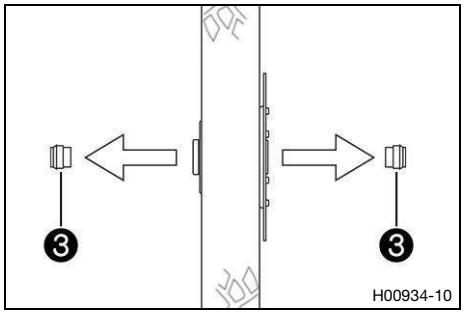

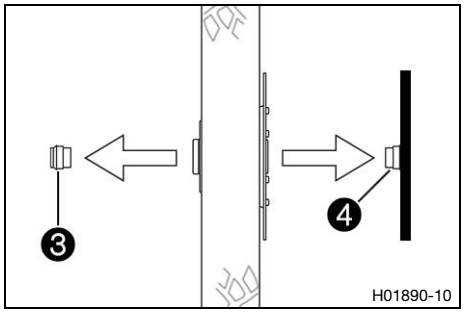

(All special models)

– Remove spacers ❸, ❹ and the brake disc guard.

14.2 Installing the front wheel

WARNING

Danger of accidents Oil, grease or wax on the brake discs reduces the brake action.

– Always keep the brake discs free of oil, fat and wax.
– Clean the brake discs with brake cleaner when necessary.

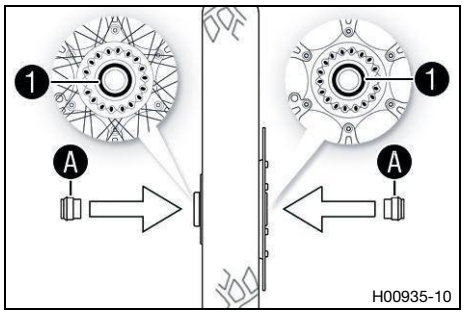

(All standard models)

– Check the wheel bearing for damage and wear.
  » If the wheel bearings are damaged or worn:
    – Change the front wheel bearing.
– Clean and grease radial shaft seal ❶ and contact surfaces Ⓐ on the spacers.

  Long-life grease (p. 175)

– Insert spacers.
– Clean and lightly grease the wheel spindle.

  Long-life grease (p. 175)

– Position the front wheel and insert the wheel spindle.
  ✓ The brake pads are positioned correctly.

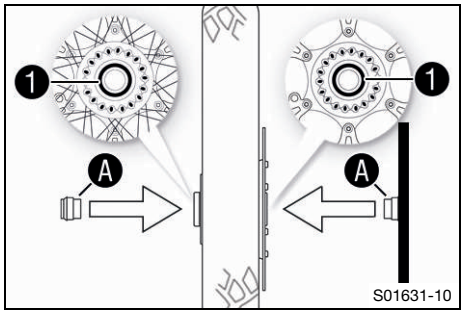

(All special models)

– Check the wheel bearing for damage and wear.
  » If the wheel bearings are damaged or worn:
    – Change the front wheel bearing.
– Clean and grease radial shaft seal ❶ and contact surfaces Ⓐ on the spacers.

  Long-life grease (p. 175)

– Insert the spacers and brake disc guard.
– Clean and lightly grease the wheel spindle.

  Long-life grease (p. 175)

– Position the front wheel and insert the wheel spindle.
  ✓ The brake pads are positioned correctly.

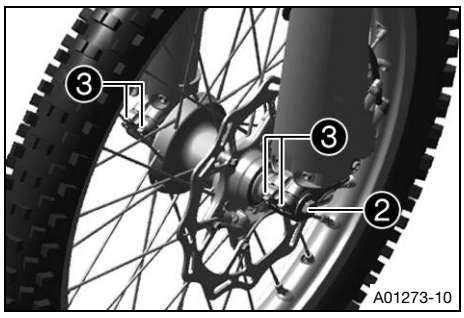

– Mount and tighten screw ❷.

Screw, wheel spindle, front	
M20×1.5	35 Nm (25.8 ft·lb$_f$)

– Operate the hand brake lever several times until the brake pads are in contact with the brake disc.
– Remove the motorcycle from the lift stand. (p. 64)
– Operate the front brake and compress the fork a few times firmly.
  ✓ The fork legs straighten.
– Tighten screws ❸.

Screw, fork shoe	
M8	15 Nm (11.1 ft·lb$_f$)

14.3 Removing the rear wheel

Preparatory work

– Raise the motorcycle with a lift stand. (p. 64)

Main work

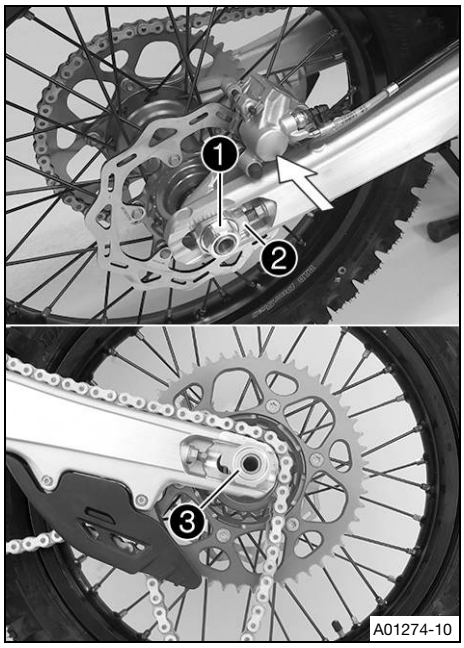

– Manually press the brake caliper toward the brake disc to push back the brake pistons.
– Remove nut ❶.
– Remove chain tension adjuster ❷. Pull out wheel spindle ❸ far enough to allow the rear wheel to be pushed forward.
– Push the rear wheel forward as far as possible. Remove the chain from the rear sprocket.

Protect the components against damage by covering them.

WARNING
Danger of accidents Damaged brake discs reduce the braking action.
– Always lay the wheel down in such a way that the brake disc is not damaged.

– Hold the rear wheel and remove wheel spindle. Take the rear wheel out of the swingarm.

Do not actuate the brake pedal when the rear wheel is removed.

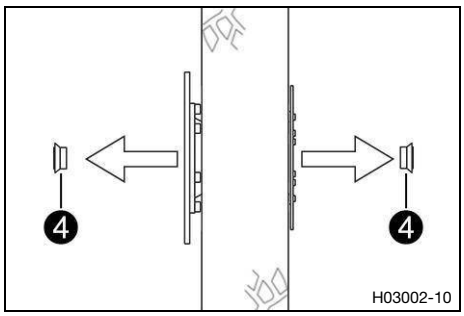

– Remove spacers ❹.

14.4 Installing the rear wheel

WARNING
Danger of accidents Oil, grease or wax on the brake discs reduces the brake action.
– Always keep the brake discs free of oil, fat and wax.
– Clean the brake discs with brake cleaner when necessary.

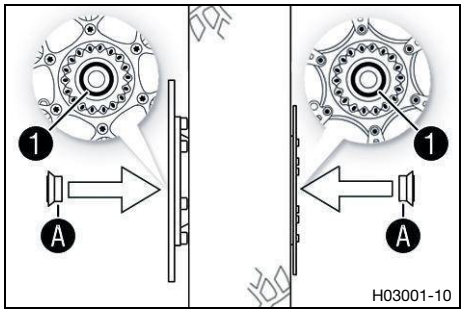

Main work

– Check the wheel bearing for damage and wear.
  » If the wheel bearings are damaged or worn:
    – Change the rear wheel bearing.
– Clean and grease radial shaft seal ❶ and contact surfaces Ⓐ on the spacers.

Long-life grease (p. 175)

– Insert spacers.

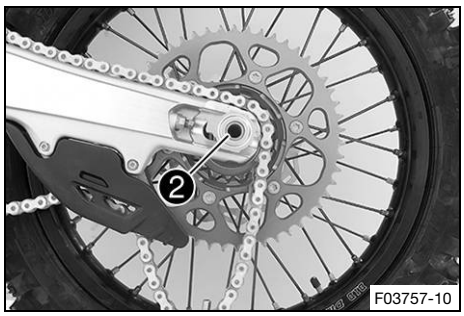

– Clean and lightly grease the wheel spindle.

Long-life grease (p. 175)

– Position rear wheel and insert wheel spindle ❷.
  ✓ The brake pads are positioned correctly.
– Attach the chain.

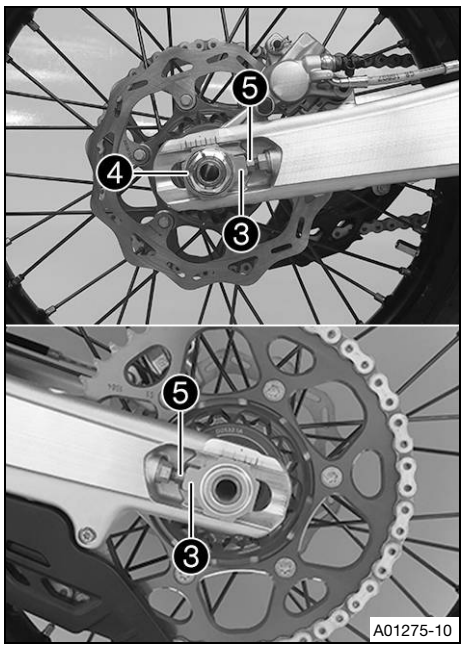

– Position chain tension adjuster ❸. Mount nut ❹ but do not tighten yet.
– Make sure that chain adjusters ❸ are fitted correctly on adjusting screws ❺.
– Check the chain tension. (p. 90)
– Tighten nut ❹.

Nut, wheel spindle, rear	
M22	80 Nm (59.0 ft·lb$_f$)

Note
The wide adjustment range of the chain adjusters enables different secondary ratios with the same chain length.
Chain adjusters ❸ can be turned by 180°.

– Actuate the brake disc repeatedly until the brake pads are in contact with the brake disc and a pressure point is achieved.

Reworking
– Remove the motorcycle from the lift stand. (p. 64)

14.5 Checking the tire condition

Note
Only mount tires approved and/or recommended by Husqvarna Mobility.
Other tires could have a negative effect on handling characteristics.
The type, condition, and pressure of the tires all have a major impact on the handling of the motorcycle.
The tires mounted on the front and rear wheels must have a similar profile.
Worn tires have a negative effect on handling characteristics, especially on wet surfaces.

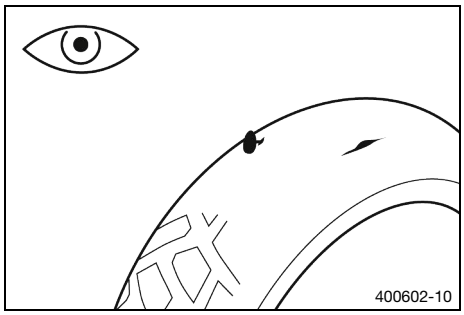

– Check the front and rear tires for cuts, embedded objects, and other damage.
  » If the tires have cuts, run-in objects, or other damage:
    – Change the tires.
– Check the tread depth.

Observe the minimum tread depth required by national law.	
Minimum tread depth	≥ 2 mm (≥ 0.08 in)

  » If the tread depth is less than the minimum tread depth:
    – Change the tires.

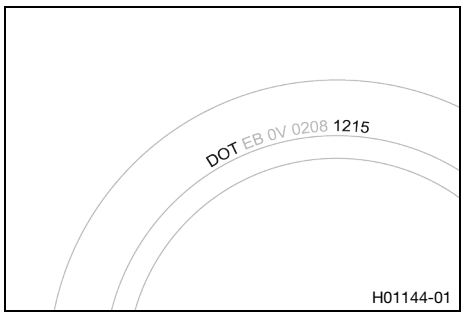

– Check the tire age.

Note
The tire date of manufacture is usually contained in the tire label and is indicated by the last four digits of the **DOT** number. The first two digits indicate the week of manufacture and the last two digits the year of manufacture.
Husqvarna Mobility recommends changing the tires, regardless of the actual wear, after 5 years at the latest.

» If the tires are older than five years:
  – Change the tires.

14.6 Checking the tire pressure

Note
Low tire pressure leads to abnormal wear and the tire overheating.
Correct tire pressure ensures optimal riding comfort and maximum tire service life.

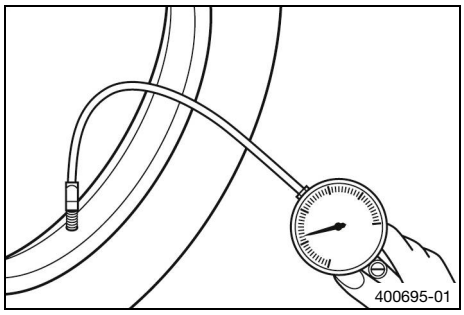

– Remove the protection cap.
– Check the tire pressure when the tires are cold.

Off-road tire pressure	
front	1.0 bar (14.5 psi)
rear	1.0 bar (14.5 psi)

Street tire pressure	
front	2.0 bar (29.0 psi)
rear	2.0 bar (29.0 psi)

» If the tire pressure does not meet specifications:
  – Correct the tire air pressure.
– Mount the protection cap.

14.7 Checking the spoke tension

WARNING
Danger of accidents Incorrectly tensioned spokes impair the handling characteristic and can result in secondary damage.
If the spokes are too tight, they can break due to being overloaded.
Loose spokes can cause lateral or radial run-out in the wheel and other spokes will loosen as a result.
– Check the spoke tension regularly, especially on a new vehicle.

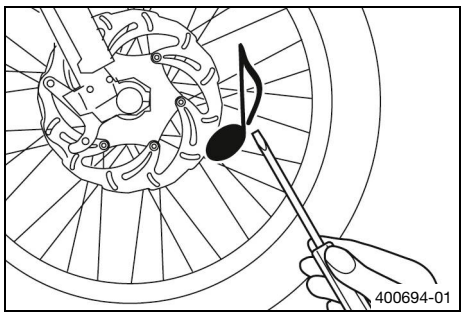

– Briefly tap each spoke with a screwdriver.

You should hear a high-pitched sound.

Note

The frequency of the sound depends on the spoke length and spoke diameter.

If spokes of the same length and diameter vibrate with a different tone, this is an indication that the spoke tensions differ.

» If the spoke tension differs:
  – Correct the spoke tension.

– Check the spoke torque.

Spoke nipple, front wheel	
M4,5	6 Nm (4.4 ft·lb_f)
Spoke nipple, rear wheel	
M4,5	6 Nm (4.4 ft·lb_f)

Torque wrench kit (58429094000)

15.1 Removing the 12 V battery

WARNING

Risk of injury 12-V batteries contain harmful substances.

- Keep 12-V batteries out of the reach of children.
- Keep the battery away from sparks or open flames.
- Only charge batteries in well-ventilated rooms.
- Maintain a minimum distance from flammable materials when charging 12-V batteries.

Minimum distance	1 m (3 ft – 3 in)

- Do not charge deeply discharged 12- V batteries if the charge is already below the minimum voltage.

Minimum voltage before starting charging	9 V

- Dispose of 12 V batteries correctly if they have less than the minimum voltage.

NOTE

Environmental hazard 12-V batteries contain environmentally-hazardous materials.

- Do not dispose of 12-V batteries as household waste.
- Dispose of 12-V batteries at a collection point for used batteries.

NOTE

Environmental hazard Hazardous substances cause environmental damage.

- Dispose of oils, grease, filters, fuel, cleaning agents, brake fluid, etc. correctly and in accordance with the applicable regulations.

Preparatory work

- Remove the seat. (p. 79)

Main work

- Disconnect negative cable ❶ from the 12 V battery.
- Pull back positive terminal cover and disconnect positive cable ❷ from the 12 V battery.
- Pull off starter relay ❸ and OCU ❹ and hang to the side.

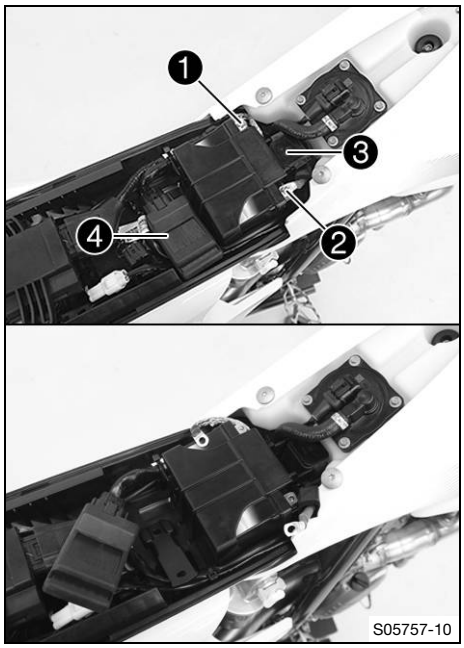

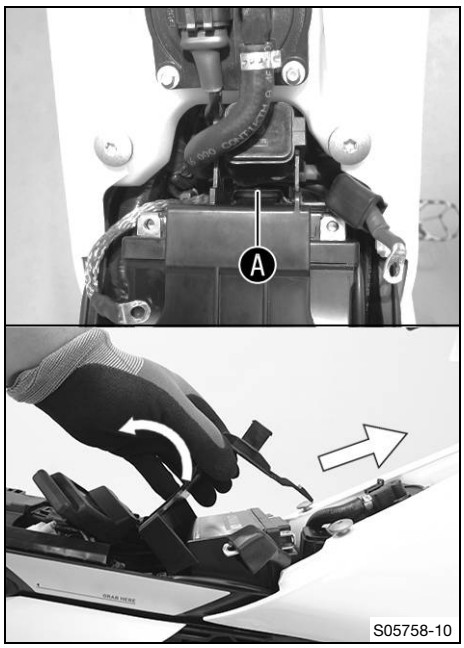

– Open the battery holding bracket in the area A and fold it upward.
– Take out the 12 V battery to the front.

15.2 Installing the 12 V battery

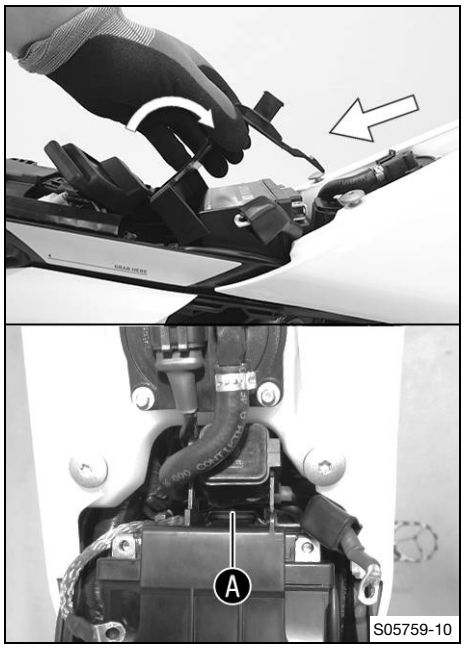

Main work

– Insert the 12 V battery into the battery compartment with the terminals facing forward and secure with holding bracket.

Ensure that the cable is routed correctly.

12-V battery (HJTZ5S-FP-C) (p. 179)

– Attach the battery holding bracket in area A and allow to engage.

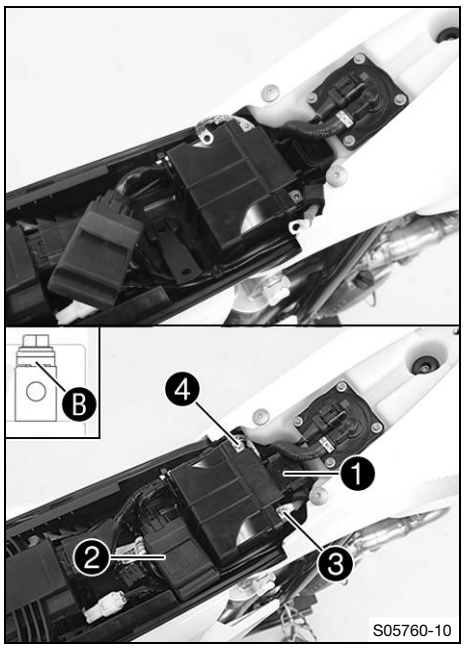

– Attach starter relay ❶ and OCU ❷ to the holding bracket.
– Connect positive cable ❸ to the 12-V battery.

Screw, battery terminal	
M5	2.5 Nm (1.84 ft·lb$_f$)

The contact disk Ⓑ must be mounted under the screw and the cable lug with the claws toward the battery terminal.

– Connect negative cable ❹ to the 12 V battery.

Screw, battery terminal	
M5	2.5 Nm (1.84 ft·lb$_f$)

The contact disk Ⓑ must be mounted under the screw and the cable lug with the claws toward the battery terminal.

– Slide the positive terminal cover over the positive terminal.

Reworking

– Mount the seat. (p. 79)

15.3 Charging the 12 V battery

WARNING

Risk of injury 12-V batteries contain harmful substances.

– Keep 12-V batteries out of the reach of children.
– Keep the battery away from sparks or open flames.
– Only charge batteries in well-ventilated rooms.
– Maintain a minimum distance from flammable materials when charging 12-V batteries.

Minimum distance	1 m (3 ft – 3 in)

– Do not charge deeply discharged 12- V batteries if the charge is already below the minimum voltage.

Minimum voltage before starting charging	9 V

– Dispose of 12 V batteries correctly if they have less than the minimum voltage.

NOTE

Environmental hazard 12-V batteries contain environmentally-hazardous materials.

– Do not dispose of 12-V batteries as household waste.
– Dispose of 12-V batteries at a collection point for used batteries.

NOTE

Environmental hazard Hazardous substances cause environmental damage.

– Dispose of oils, grease, filters, fuel, cleaning agents, brake fluid, etc. correctly and in accordance with the applicable regulations.

Note

Even when there is no load on the 12 V battery, it discharges steadily each day.

The state of charge and the method of charging are very important for the service life of the 12 V battery.

Rapid recharging with a high charging current shortens the service life of the battery.

If the charging current or charging voltage are exceeded, the 12-V battery will be irreparably damaged.

If the 12 V battery is left in a discharged state for an extended period, it will become deeply discharged and suffer a loss of capacity, destroying the battery.

The 12 V battery is maintenance-free.

Preparatory work

– Remove the seat. (p. 79)

– Remove the 12 V battery. (p. 119)

Main work

– Check the battery voltage.

Do not open the cover ❶.

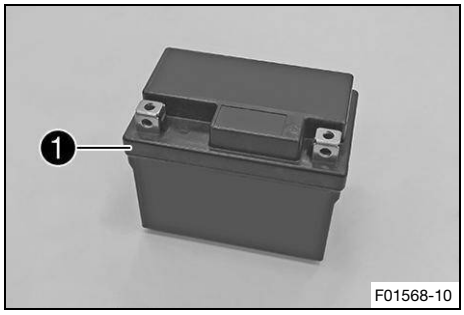

» Battery voltage:
  - < 9 V
  – Do not charge the 12 V battery.
  – Replace the 12 V battery and dispose of the old 12 V battery properly.

» If the specifications have been met:
  Battery voltage:
  - ≥ 9 V
  – Connect a charger to the 12 V battery and switch on the charger.

Read the accompanying instructions.	
Maximum charging voltage	14.4 V
Minimum charging voltage	3.0 A
Maximum charging time	12 h
The charging current, charging voltage, and charging time must not be exceeded.	
Recharge the 12 V battery regularly when the motorcycle is not being used.	3 months
If the 12 V battery is depleted from starting the vehicle repeatedly, the battery must be charged immediately.	
Ideal charging and storage temperature of the lithium-ion battery	10 °C … 20 °C (50.0 °F … 68.0 °F)

Battery charger (26529974000)

Note
This battery charger tests whether the 12 V battery retains its voltage. It is also impossible to overcharge the 12 V battery with this battery charger. The charging time may be longer at low temperatures.

Note
This battery charger is only suitable for lithium iron phosphate batteries.

– Switch off the charger after charging and disconnect from the 12 V battery.

Reworking

– Install the 12 V battery. (p. 120)
– Mount the seat. (p. 79)

15.4 Changing the main fuse

WARNING
Fire hazard Incorrect fuses overload the electrical system.
– Use only fuses with the prescribed amperage.
– Do not bypass or repair fuses.

Note
The main fuse protects all electrical power loads of the vehicle. It is located in the starter relay housing under the seat.

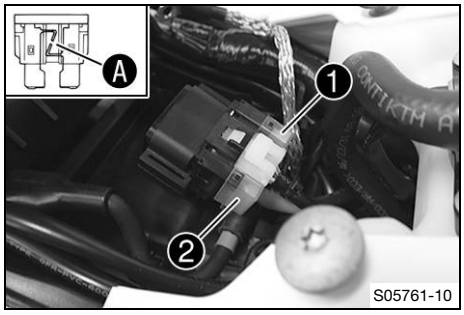

Preparatory work
– Remove the seat. (p. 79)
– Remove the fuel tank. (p. 85)

Main work
– Pull the starter relay off the holder and hang to the side.
– Remove the protection caps.
– Remove faulty main fuse 1.

Note
A faulty fuse has a burned-out fuse wire A.
A spare fuse 2 is located in the starter relay.

– Insert the main fuse.

Fuse (58011109120) (p. 180)

– Check that the electrical equipment is functioning properly.

Tip
Insert a new spare fuse so that it is available if needed.

– Mount the protection caps.
– Mount the starter relay onto the holder and route the cable.

Reworking
– Install the fuel tank. (p. 87)
– Mount the seat. (p. 79)

15.5 Removing the headlight mask with the headlight

– Loosen screws 1.
– Slide the headlight mask up and swing it forward.
– Detach the brake line and wiring harness from the headlight mask.

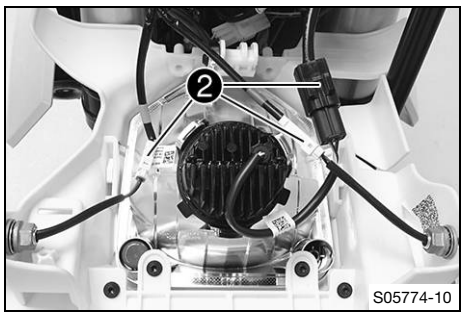

– Detach plug-in connectors ❷ and take off the headlight mask with the headlight.

15.6 Installing the headlight mask with the headlight

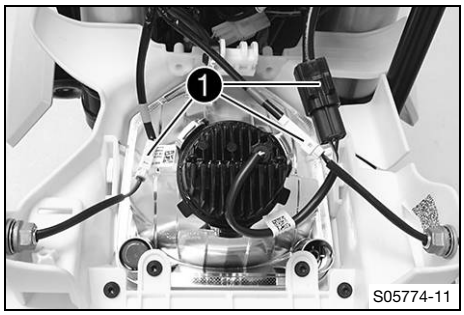

Main work

– Join plug-in connectors ❶.

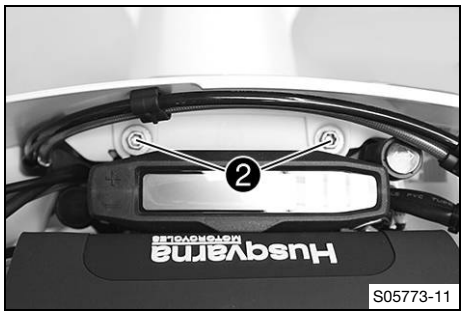

– Position the brake line and wiring harness in the brake line guide.
– Position the headlight mask.
  ✓ The holding lugs engage in the fender.
– Tighten screws ❷.

Remaining screws on chassis	
M6	10 Nm (7.4 ft·lb$_f$)

Reworking

– Check the headlight setting. (p. 126)

15.7 Changing the headlight bulb

Preparatory work

– Remove the headlight mask with the headlight. (p. 124)

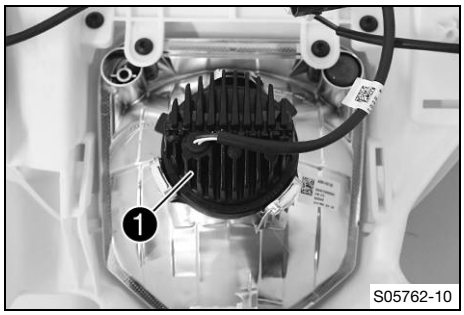

Main work

– Turn LED unit ❶ counterclockwise all the way and take it out of the reflector.

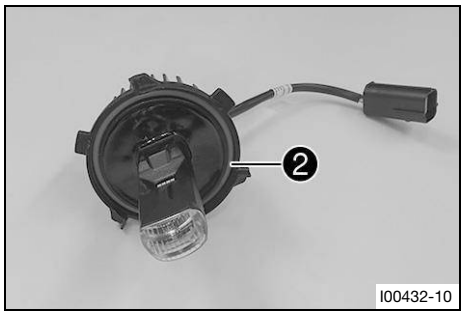

– Insert the LED unit into the reflector and turn it clockwise all the way.

Ensure that O-ring ❷ is seated properly.

Low beam (LED) (p. 179)

Reworking

– Install the headlight mask with the headlight. (p. 125)
– Check the headlight setting. (p. 126)

15.8 Checking the headlight setting

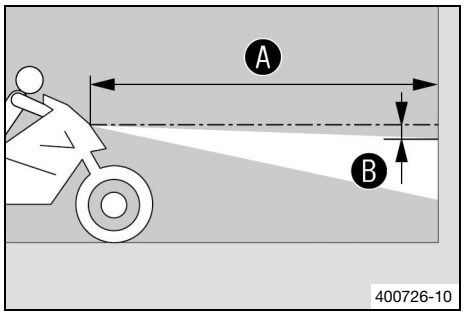

– Park the vehicle on a horizontal surface in front of a light-colored wall and make a mark at the height of the center of the low beam headlight.
– Make another mark at a distance Ⓑ under the first marking.

Distance Ⓑ	5 cm (2.0 in)

– Position the vehicle vertically at a distance Ⓐ away from the wall.

Distance Ⓐ	5 m (16 ft – 5 in)

– Sit on the motorcycle.
– Switch on the low beam.
– Check the headlight setting.

The boundary between light and dark must be exactly on the lower mark for a motorcycle with rider.

» If the boundary between light and dark does not meet specifications:
  – Adjust headlight range. (p. 127)

15.9 Adjusting the headlight range

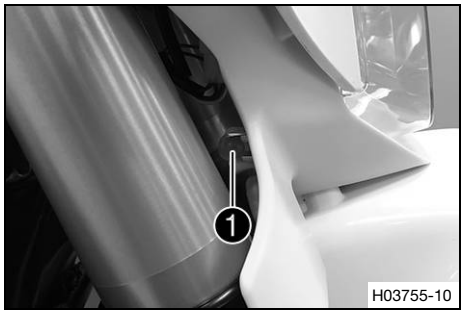

Preparatory work

– Check the headlight setting. (p. 126)

Main work

– Loosen screw ❶.
– Adjust the headlight range by pivoting the headlight.

The boundary between light and dark must be exactly on the lower mark for a motorcycle with rider (instructions on how to apply the mark: Checking the headlight setting).

Note
A change in weight may require a correction of the headlight range.

– Tighten screw ❶.

15.10 Changing the turn signal bulb

NOTE
Impairments to reflectors and lamps Grease on the reflector reduces the emitted light.
Grease on the bulb will evaporate due to the heat and be deposited on the reflector.
Grease residue on the bulb reduces heat dissipation and increases the heat of the bulb, thus reducing its service life.
– Clean and degrease the bulbs before mounting.
– Do not touch the bulbs with your bare hands.

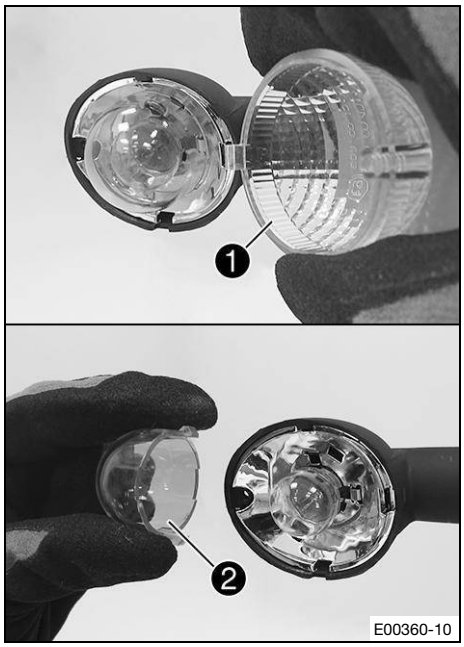

Main work

– Remove the screw on the rear of the turn signal housing.
– Carefully remove turn signal glass ❶.
– Lightly squeeze orange cap ❷ in the area of the holding lugs and take it off.
– Press the turn signal bulb lightly into the socket, turn it counterclockwise by about 30°, and pull it out of the socket.
– Press the new turn signal bulb carefully into the socket and turn it clockwise until it stops.

Turn signal (R10W / Sockel BA15s) (p. 179)

– Mount the orange cap.
– Position the turn signal glass.
– Insert the screw and first turn counterclockwise until it engages in the thread with a small jerk. Tighten the screw lightly.

Reworking

– Check that the turn signal system is functioning properly.

15.11 combination instrument battery, changing

Preparatory work

– Remove the headlight mask with the headlight. (p. 124)

Main work

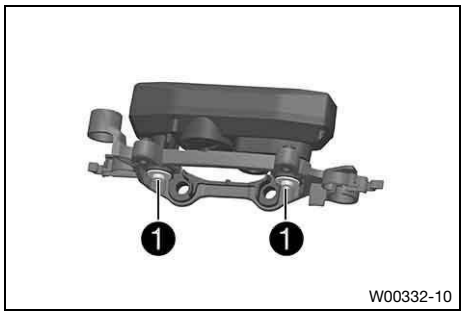

W00332-10

– Remove screws ❶ with the washers.
– Pull the combination instrument upward out of the holder.

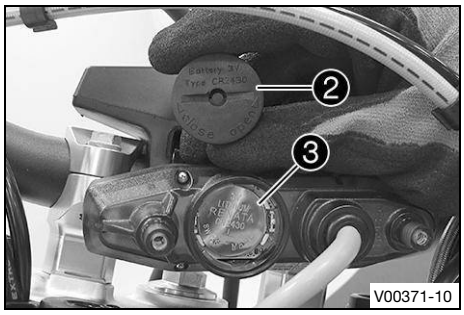

V00371-10

– Using a coin, turn protection cap ❷ all the way counter-clockwise and take it off.
– Remove combination instrument battery ❸.
– Insert the combination instrument with the label facing upward.

Button cell (CR 2430) (p. 179)

– Check the O-ring of the protection cap for correct seating.

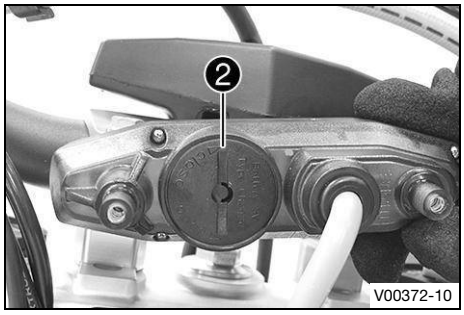

V00372-10

– Position protection cap ❷ and turn all the way clockwise using a coin.
– Press any button on the combination instrument.
  ✓ The combination instrument is activated.
– Position the combination instrument in the holder.
– Mount and tighten the screws with washers.

Reworking

– Install the headlight mask with the headlight. (p. 125)
– Check the headlight setting. (p. 126)
– Set to kilometers or miles. (p. 29)
– Set the combination instrument. (p. 29)
– Set the clock. (p. 30)

15.12 Diagnostic connector

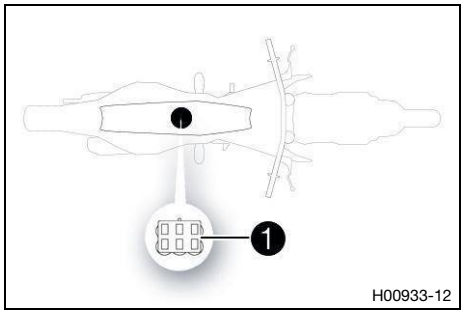

Diagnostics connector ❶ is located under the seat.

15.13 OCU

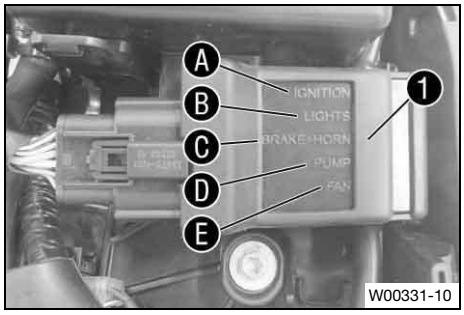

OCU ❶ is located under the seat.

The OCU replaces the electronic fuses and relays.

All outputs are switched independently of the signals of the voltage regulator and ECU.

The outputs are deactivated individually in the event of overcurrent.

This enables easy error detection because the status of each output is indicated via LED lights.

The OCU monitors the electronics system completely independently.

As soon as an indicated error is rectified, the status light of the OCU changes from red to green.

overview

A	Ignition
B	Light
C	Brake light + horn
D	Fuel pump
E	Radiator fan

16.1 Cooling system

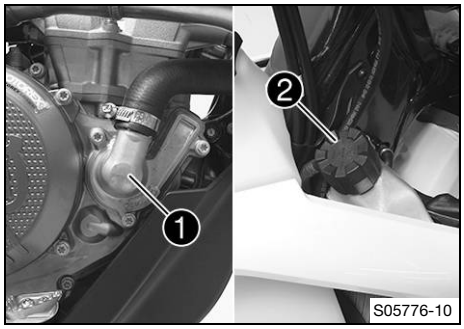

Water pump ❶ in the engine circulates the coolant.
The pressure resulting from the warming of the cooling system is regulated by a valve in radiator cap ❷.
The coolant is cooled by the air stream.
The lower the vehicle speed, the lower the cooling effect. Dirty cooling fins also reduce the cooling effect.
Additional cooling is provided by the radiator fan, which is activated at high temperature.

16.2 Checking the frost protection and coolant level

WARNING
Health hazard Coolant is harmful to health.
- Keep coolant out of the reach of children.
- Do not allow coolant to come into contact with skin, eyes, or clothing.
- Consult a doctor immediately if coolant has been ingested.
- Rinse the affected area immediately with plenty of water in the event of contact with skin.
- Rinse eyes thoroughly with water and consult a doctor immediately if coolant comes into contact with eyes.
- If coolant spills on to your clothing, change the clothing.
- Store coolant properly in a suitable container and keep out of the reach of children.

WARNING
Danger of scalding The coolant heats up and is under high pressure when the vehicle is operated.
- Do not open the radiator, the radiator hoses, or other cooling system components if the engine or the cooling system are at operating temperature.
- Allow the cooling system and the engine to cool down before you open the radiator, the radiator hoses, or other components of the cooling system.
- In the event of scalding, rinse the area affected immediately with lukewarm water.

Condition: The engine is cold

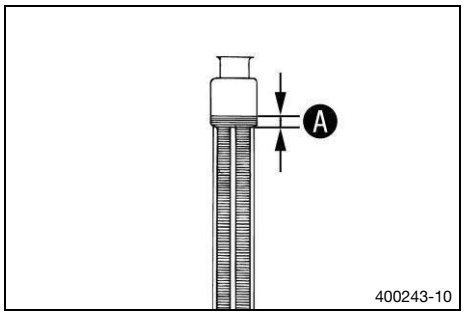

- Stand the motorcycle upright on a level surface.
- Take off the radiator cap.
- Check the frost protection in the coolant.

−45 °C … −25 °C (−49.0 °F … −13.0 °F)

  » If the frost protection in the coolant does not match the specified value:
    - Correct the frost protection in the coolant.
- Check the coolant level in the radiator.

Coolant level Ⓐ above the radiator fins	10 mm (0.39 in)

» If the coolant level does not meet the specifications:
– Correct the coolant level.

coolant	
Coolant (p. 176) Antifreeze protection to at least: −25 °C (−13.0 °F)	0.95 l (0.251 liq. gal_{US})

– Mount the radiator cap.

16.3 Checking the coolant level

WARNING
Health hazard Coolant is harmful to health.
– Keep coolant out of the reach of children.
– Do not allow coolant to come into contact with skin, eyes, or clothing.
– Consult a doctor immediately if coolant has been ingested.
– Rinse the affected area immediately with plenty of water in the event of contact with skin.
– Rinse eyes thoroughly with water and consult a doctor immediately if coolant comes into contact with eyes.
– If coolant spills on to your clothing, change the clothing.
– Store coolant properly in a suitable container and keep out of the reach of children.

WARNING
Danger of scalding The coolant heats up and is under high pressure when the vehicle is operated.
– Do not open the radiator, the radiator hoses, or other cooling system components if the engine or the cooling system are at operating temperature.
– Allow the cooling system and the engine to cool down before you open the radiator, the radiator hoses, or other components of the cooling system.
– In the event of scalding, rinse the area affected immediately with lukewarm water.

Condition: The engine is cold

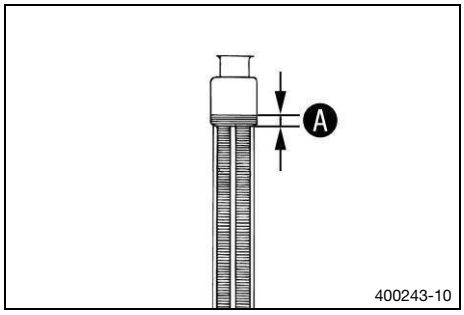

– Stand the motorcycle upright on a level surface.
– Take off the radiator cap.
– Check the coolant level in the radiator.

Coolant level A above the radiator fins	10 mm (0.39 in)

» If the coolant level does not meet the specifications:
– Correct the coolant level.

coolant	
Coolant (p. 176) Antifreeze protection to at least: −25 °C (−13.0 °F)	0.95 l (0.251 liq. gal_{US})

– Mount the radiator cap.

16.4 Draining the coolant

WARNING
Health hazard Coolant is harmful to health.
- Keep coolant out of the reach of children.
- Do not allow coolant to come into contact with skin, eyes, or clothing.
- Consult a doctor immediately if coolant has been ingested.
- Rinse the affected area immediately with plenty of water in the event of contact with skin.
- Rinse eyes thoroughly with water and consult a doctor immediately if coolant comes into contact with eyes.
- If coolant spills on to your clothing, change the clothing.
- Store coolant properly in a suitable container and keep out of the reach of children.

WARNING
Danger of scalding The coolant heats up and is under high pressure when the vehicle is operated.
- Do not open the radiator, the radiator hoses, or other cooling system components if the engine or the cooling system are at operating temperature.
- Allow the cooling system and the engine to cool down before you open the radiator, the radiator hoses, or other components of the cooling system.
- In the event of scalding, rinse the area affected immediately with lukewarm water.

Condition: The engine is cold

Preparatory work
- Remove the skid plate. (p. 99)

Main work
- Stand the motorcycle upright.
- Place an appropriate container under the water pump cover.
- Remove screw ❶ and take off radiator cap ❷.
- Completely drain the coolant.
- Mount screw ❶ with the new sealing ring and tighten.

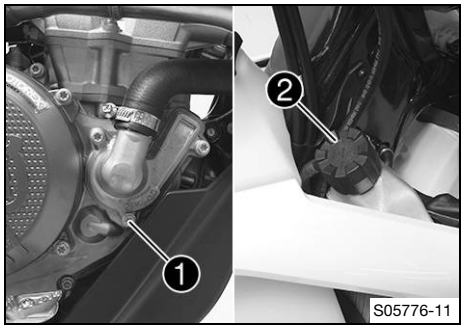

Screw, water pump cover	
M6	10 Nm (7.4 ft·lb$_f$)

16.5 Refilling the coolant

WARNING
Health hazard Coolant is harmful to health.
- Keep coolant out of the reach of children.
- Do not allow coolant to come into contact with skin, eyes, or clothing.
- Consult a doctor immediately if coolant has been ingested.
- Rinse the affected area immediately with plenty of water in the event of contact with skin.
- Rinse eyes thoroughly with water and consult a doctor immediately if coolant comes into contact with eyes.
- If coolant spills on to your clothing, change the clothing.
- Store coolant properly in a suitable container and keep out of the reach of children.

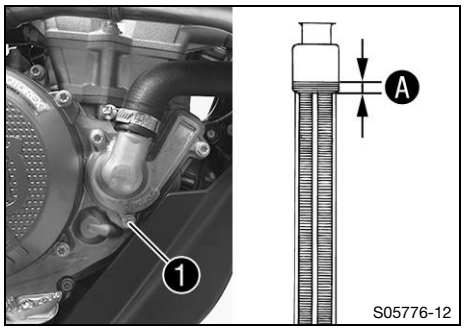

Main work

– Make sure that screw ❶ is tightened.
– Stand the motorcycle upright.
– Pour coolant in up to level Ⓐ above the radiator fins.

10 mm (0.39 in)

coolant	
Coolant (p. 176) Antifreeze protection to at least: −25 °C (−13.0 °F)	0.95 l (0.251 liq. gal_{US})

– Mount the radiator cap.

Reworking

– Go for a short test ride.
– Check the coolant level. (p. 131)
– Install the skid plate. (p. 99)

16.6 Changing the coolant

WARNING
Health hazard Coolant is harmful to health.
– Keep coolant out of the reach of children.
– Do not allow coolant to come into contact with skin, eyes, or clothing.
– Consult a doctor immediately if coolant has been ingested.
– Rinse the affected area immediately with plenty of water in the event of contact with skin.
– Rinse eyes thoroughly with water and consult a doctor immediately if coolant comes into contact with eyes.
– If coolant spills on to your clothing, change the clothing.
– Store coolant properly in a suitable container and keep out of the reach of children.

WARNING
Danger of scalding The coolant heats up and is under high pressure when the vehicle is operated.
– Do not open the radiator, the radiator hoses, or other cooling system components if the engine or the cooling system are at operating temperature.
– Allow the cooling system and the engine to cool down before you open the radiator, the radiator hoses, or other components of the cooling system.
– In the event of scalding, rinse the area affected immediately with lukewarm water.

Condition: The engine is cold

Preparatory work

– Remove the skid plate. (p. 99)

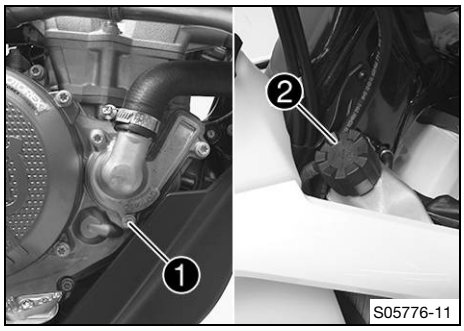

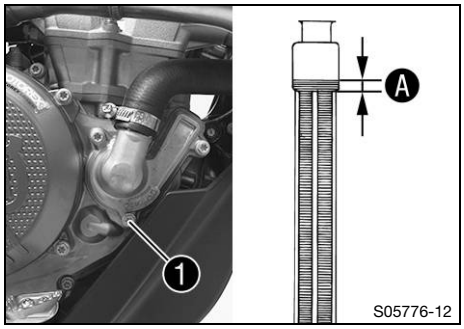

Main work

- Stand the motorcycle upright.
- Place an appropriate container under the water pump cover.
- Remove screw ❶ and take off radiator cap ❷.
- Completely drain the coolant.

- Mount screw ❶ with the new sealing ring and tighten.

Screw, water pump cover	
M6	10 Nm (7.4 ft·lb$_f$)

- Pour coolant in up to level Ⓐ above the radiator fins.

10 mm (0.39 in)

coolant	
Coolant (p. 176) Antifreeze protection to at least: −25 °C (−13.0 °F)	0.95 l (0.251 liq. gal$_{US}$)

- Mount radiator cap ❷.

Reworking

- Go for a short test ride.
- Check the coolant level. (p. 131)
- Install the skid plate. (p. 99)

17.1 Checking the play in the throttle cable

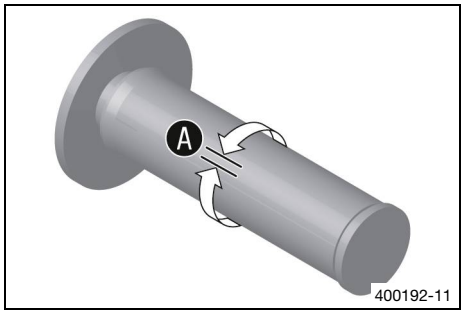

– Check the throttle grip for smooth operation.
– Move the handlebar to the straight-ahead position. Turn the throttle twist grip back and forth slightly and determine the play in throttle cable Ⓐ.

Throttle cable play	3 mm … 5 mm (0.12 in … 0.20 in)

» If the throttle cable play does not meet the specified value:
  – Adjust the throttle cable play. (p. 135)

– Press the cold start button in all the way to the stop.
✓ When the throttle twist grip is turned forward, the cold start button jumps back to the start position.
» If the cold start button does not return to its original position:
  – Adjust the throttle cable play. (p. 135)

DANGER
Danger of poisoning Exhaust gases are toxic and inhaling them may result in unconsciousness and death.
– Always ensure that there is sufficient ventilation when running the engine.
– Use suitable exhaust extraction when starting or running the engine in an enclosed space.

– Start the engine and let it run at idle speed. Move the handlebar back and forth over the entire steering range.

The idle speed must not change.

» If the idle speed changes:
  – Adjust the throttle cable play. (p. 135)

17.2 Adjusting the throttle cable play

Note
If the correct routing of the throttle cables has already been secured, the fuel tank does not need to be removed.

Preparatory work
– Remove the seat. (p. 79)
– Remove the fuel tank. (p. 85)
– Check the throttle cable routing. (p. 94)

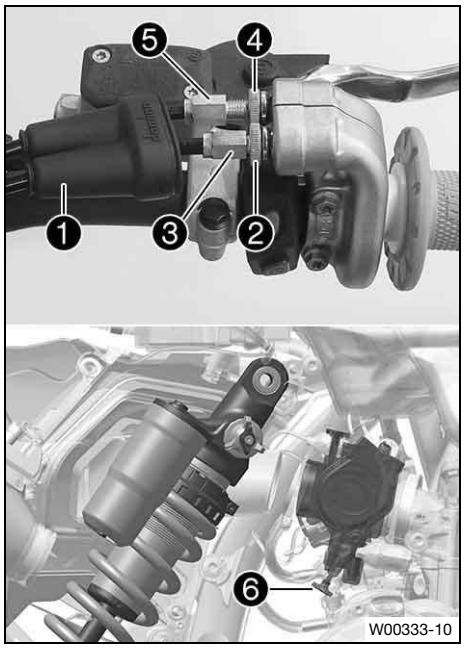

Main work

- Move the handlebar to the straight-ahead position.
- Push back sleeve ❶.
- Loosen nut ❷.
- Turn adjusting screw ❸ in as far as possible.
- Loosen nut ❹.
- Push cold start button ❻ all the way to the stop.
- Turn adjusting screw ❺ so that the cold start button moves to the basic position when the throttle grip is turned to the front.
- Tighten nut ❹.
- Turn adjusting screw ❸ so that there is play in the throttle cable at the throttle grip.

Throttle cable play	3 mm … 5 mm (0.12 in … 0.20 in)

- Tighten nut ❷.
- Slide on sleeve ❶.
- Check the throttle for smooth operation.

Reworking

- Check the play in the throttle cable. (p. 135)
- Install the fuel tank. (p. 87)
- Mount the seat. (p. 79)

17.3 Adjusting the characteristic map of the throttle response

Note

On the throttle grip, the characteristic map of the throttle response is changed by changing the guide plate.

A guide plate with a different characteristic map is supplied.

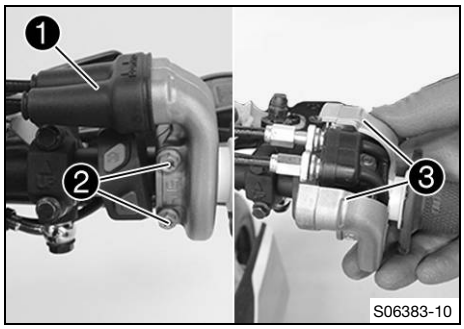

Main work

- Push back sleeve ❶.
- Remove screws ❷ and half-shells ❸.
- Detach the throttle cables and take off the grip tube.

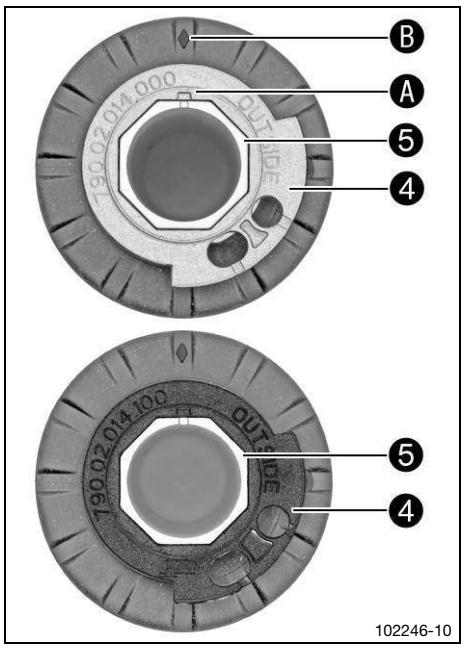

– Remove guide plate ❹ from handle tube ❺.
– Position the required guide plate on the grip tube.

The label **OUTSIDE** must be visible. Marking Ⓐ must be positioned at marking Ⓑ.

Gray guide plate (A48002014000)
Work material (Alternative 1 / 1)
Black guide plate (A46002014000)

Note

The gray guide plate opens the throttle valve more slowly.

The black guide plate opens the throttle valve more quickly.

The gray guide plate is mounted upon delivery.

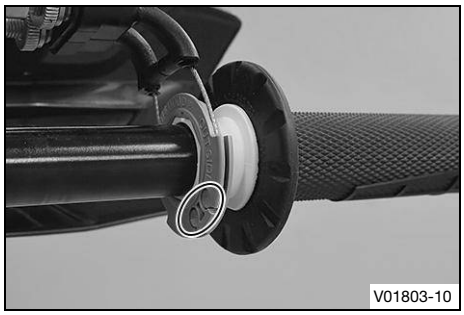

– Clean the outside of the handlebar and the inside of the grip tube. Mount the grip tube on the handlebar.
– Attach the throttle cables to the guide plate and route correctly.

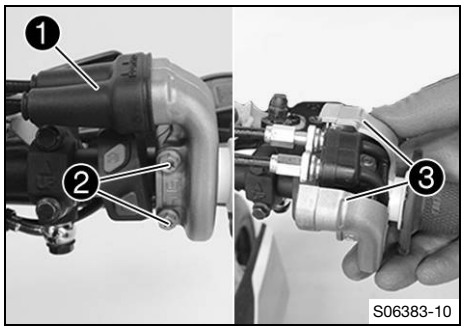

– Position half-shells ❸, mount and tighten screws ❷.

Screw, throttle twist grip	
M6	5 Nm (3.7 ft·lb$_f$)

– Slide on sleeve ❶ and check the throttle grip for ease of movement.

Reworking

– Check the play in the throttle cable. (p. 135)

17.4 Changing the mapping

Note
If the combination switch is mounted, the vehicle's road permit, if any, expires.
The vehicle may only be operated in closed-off areas away from public road traffic if the combination switch is installed.

Note
The traction control can be activated with the TC-button.
The mapping can also be changed during the ride.

– Select one of the following alternatives.

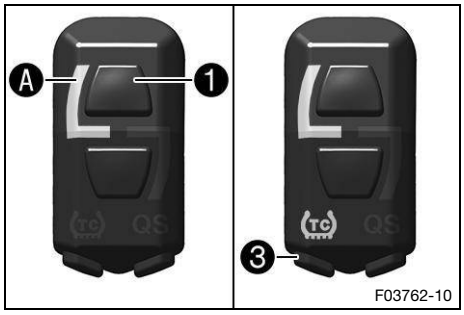

Activating STANDARD mapping

– Press button ❶.

Engine speed	< 4,000 rpm (< 66.67 Hz)

✓ The indicator lamp Ⓐ lights up.
✓ STANDARD: balanced response

Note
Traction control can be activated additionally using TC button ❸.

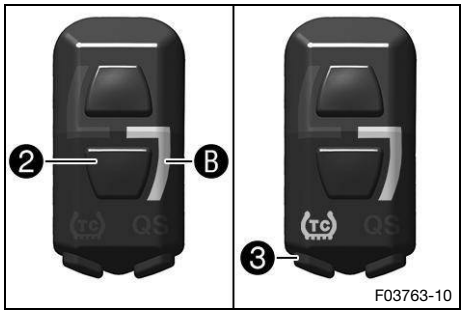

Activating ADVANCED mapping

– Press button ❷.

Engine speed	< 4,000 rpm (< 66.67 Hz)

✓ The indicator lamp Ⓑ lights up.
✓ ADVANCED: direct response

Note
Traction control can be activated additionally using TC button ❸.

17.5 adjusting the idle speed

WARNING
Danger of accidents The engine may suddenly come to a halt if the idle speed is set too low.
– Set the idle speed to the specified value.

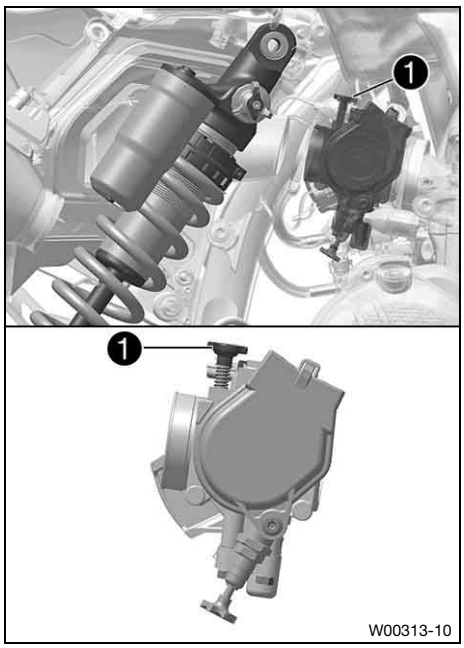

– Run the engine until warm.
– Check whether the cold start button has returned to its basic position.

DANGER

Danger of poisoning Exhaust gases are toxic and inhaling them may result in unconsciousness and death.

– Always ensure that there is sufficient ventilation when running the engine.
– Use suitable exhaust extraction when starting or running the engine in an enclosed space.

– Adjust the idle speed by turning idle speed adjusting screw ❶.

Idle speed	1,950 rpm … 2,050 rpm (32.50 Hz … 34.17 Hz)
Make the adjustment in small steps.	

Service hour counter with revolution counter (A54012920100)

Note

Turning counterclockwise lowers the idle speed.

Turning clockwise increases the idle speed.

An incorrect idle speed can have a negative impact on overall engine running.

17.6 Teaching the throttle valve position

Note

If the control unit detects that the throttle valve position at idle speed needs to be retaught, then the malfunction indicator lamp flashes 2x per second.

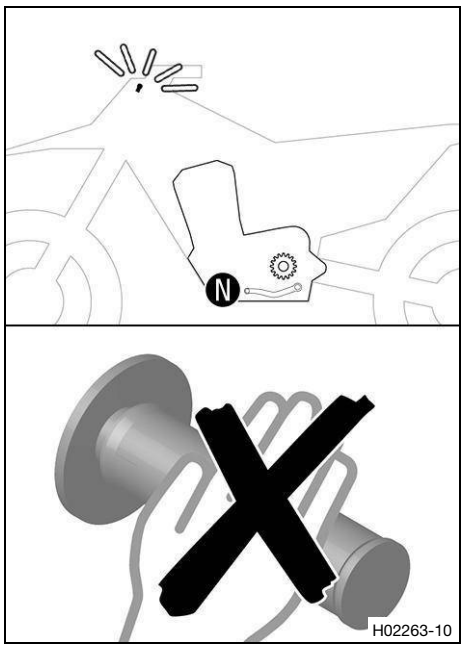

DANGER

Danger of poisoning Exhaust gases are toxic and inhaling them may result in unconsciousness and death.

– Always ensure that there is sufficient ventilation when running the engine.
– Use suitable exhaust extraction when starting or running the engine in an enclosed space.

– Allow the vehicle to run at idle speed.
  ✓ The malfunction indicator lamp stops flashing once teaching is completed.

Note

If the engine becomes too warm, perform a cool-down ride at medium speed.

Then do not switch off the engine after this, but leave it running at idle speed until teaching is completed.

17.7 Checking the basic position of the gear shift lever

Note

When driving, the gear shift lever must not touch the rider's boot when in the basic position.

When the gear shift lever keeps touching the boot, the transmission will be subject to an excessive load.

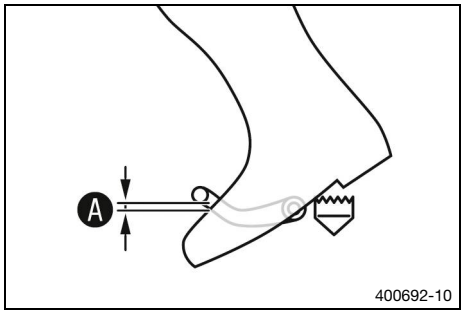

– Sit on the vehicle in the riding position and measure the distance Ⓐ between the upper edge of your boot and the shift lever.

Distance between the gear shift lever and upper edge of boot	10 mm … 20 mm (0.39 in … 0.79 in)

» If the distance does not meet the specifications:
  – Adjust the basic position of the gear shift lever. (p. 140)

17.8 Adjusting the basic position of the gear shift lever

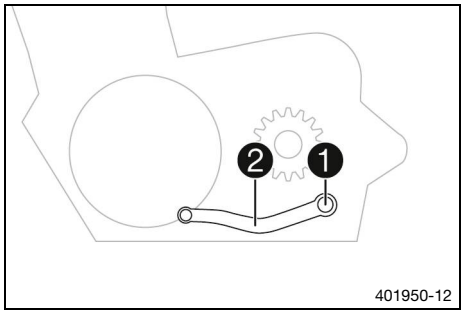

– Remove screw ❶ with the washers and take off shift lever ❷.

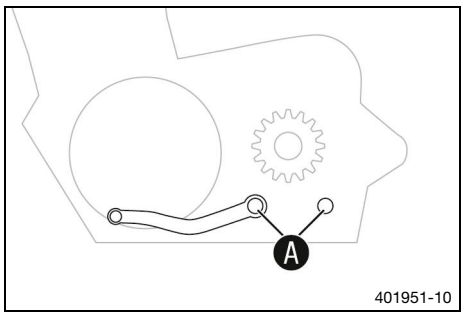

– Clean gear teeth Ⓐ of the shift lever and shift shaft.
– Mount shift lever ❷ on the shift shaft in the required position and engage the gearing.

The gear shift lever must not come into contact with any other vehicle components during the shift procedure.

Note
The range of adjustment is limited.

– Mount and tighten screw ❶ with washers.

Screw, shift lever	
M6	14 Nm (10.3 ft·lb$_f$) **Loctite® 243**

18.1 Changing the fuel screen

DANGER

Fire hazard Fuel is highly flammable.

The fuel in the fuel tank expands when warm and can escape if overfilled.

- Do not refuel the vehicle in the vicinity of open flames, glowing, or smoldering objects.
- Make sure that nobody smokes in the vicinity of the vehicle during the refueling process.
- Switch off the engine for refueling.
- Make sure that no fuel is spilled; particularly not on hot parts of the vehicle.
- If any fuel is spilled, wipe it up immediately.
- Do not overfill the fuel tank.

WARNING

Danger of poisoning Fuel is harmful to health.

- Do not allow fuel to come into contact with skin, eyes, or clothing.
- Consult a doctor immediately if fuel has been ingested.
- Do not inhale fuel vapors.
- Rinse the affected area immediately with plenty of water in the event of contact with skin.
- Rinse eyes thoroughly with water and consult a doctor immediately if fuel comes into contact with eyes.
- If fuel spills on to your clothing, change the clothing.
- Store fuel properly in a suitable container and keep out of the reach of children.

NOTE

Environmental hazard Improper handling of fuel is dangerous to the environment.

- Do not allow fuel to enter the groundwater, the soil, or the sewage system.

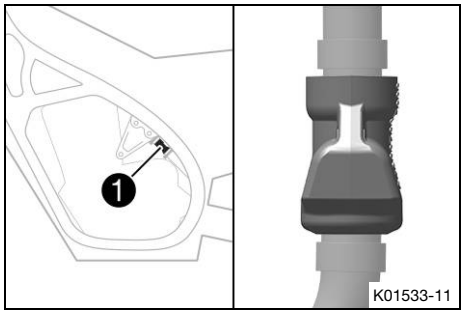

- Remove protection cap 1 of the fuel line.

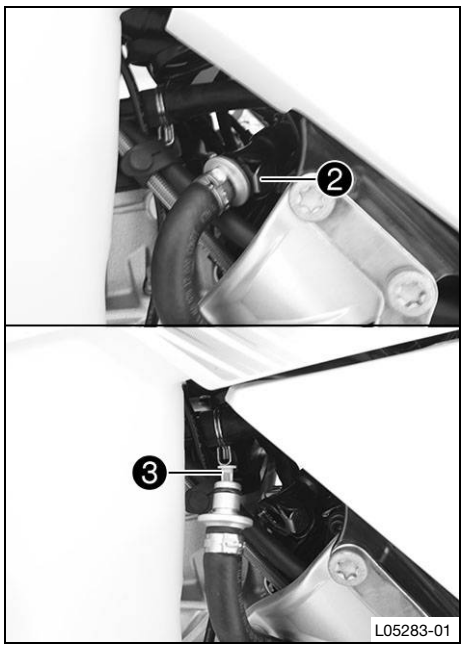

– Clean quick-lock coupling ❷ thoroughly with compressed air.

Dust must not enter the fuel line. Dirt in the fuel line clogs the injector!

– Disconnect the quick-lock coupling.

Note
Remaining fuel may flow out of the fuel hose.

– Pull fuel screen ❸ out of the connecting piece.
– Slide the new fuel screen all the way into the connecting piece.
– Spray silicone spray onto a lint-free cleaning cloth and lightly lubricate the O-ring of the quick-lock coupling.

Silicone spray (p. 176)

– Join quick release coupling ❷.

DANGER
Danger of poisoning Exhaust gases are toxic and inhaling them may result in unconsciousness and death.
– Always ensure that there is sufficient ventilation when running the engine.
– Use suitable exhaust extraction when starting or running the engine in an enclosed space.

– Start the engine and check the response.

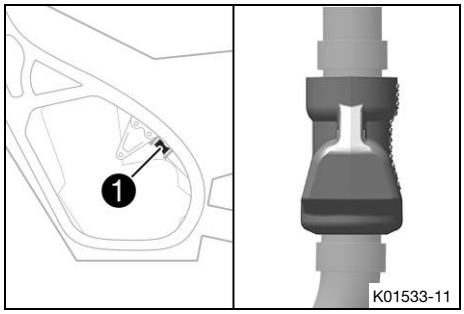

– Mount protection cap ❶ of the fuel line.

18.2 Checking the engine oil level

Condition: Engine is at operating temperature

Preparatory work
– Stand the motorcycle upright on a level surface.

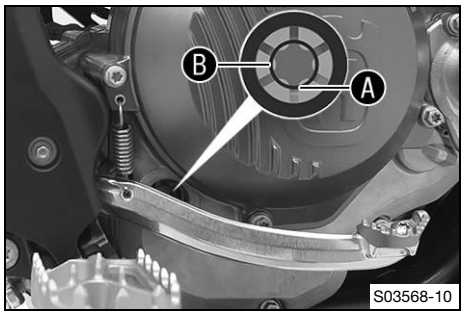

Main work

– Check the engine oil level.

The engine oil is at a level between lower edge Ⓐ and the middle of level viewer Ⓑ.
After switching off the engine, wait one minute before checking the level.

» If the engine oil is not up to lower edge Ⓐ of the level viewer:
  – Add engine oil. (p. 146)

18.3 Changing the engine oil and oil filter, cleaning the oil screens

WARNING

Danger of scalding Engine and gear oil heat up when the motorcycle is operated.

– Wear suitable protective clothing and safety gloves.
– In the event of scalding, rinse the area affected immediately with lukewarm water.

NOTE

Environmental hazard Hazardous substances cause environmental damage.

– Dispose of oils, grease, filters, fuel, cleaning agents, brake fluid, etc. correctly and in accordance with the applicable regulations.

Condition: Engine is at operating temperature

Preparatory work

– Remove the skid plate. (p. 99)
– Park the motorcycle on a level surface.

Main work

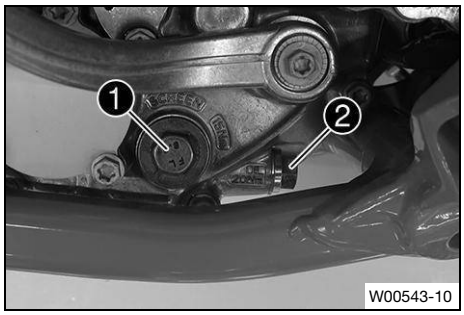

– Position an appropriate container under the engine.
– Remove screw plug ❶ with oil screen and the O-rings.
– Remove oil drain plug ❷ with the magnet and seal ring.

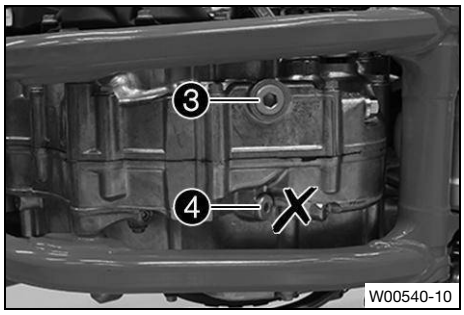

– Remove screw plug ❸ with O-ring.

Do not remove screw ❹.

– Allow the engine oil to drain completely.
– Thoroughly clean the parts and the sealing surfaces.
– Mount and tighten screw plug ❸ with new O-ring.

Oil drain plug	
M14×1.5	15 Nm (11.1 ft·lb$_f$)

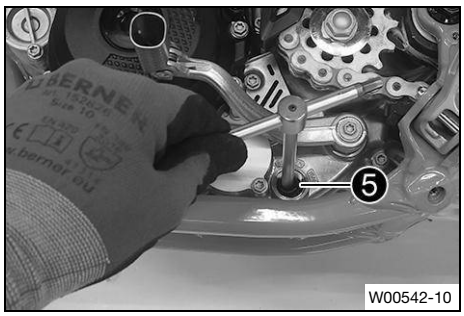

– Position oil screen ❺ with the O-rings on a pin wrench.
– Position the pin wrench through the drill hole of the screw plug in the opposite section of the engine case.
– Push the oil screen all the way into the engine case.

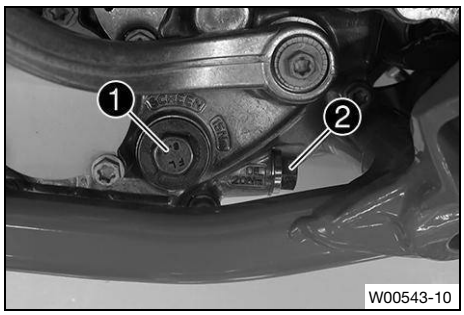

– Mount and tighten screw plug ❶ with O-ring.

Plug, oil screen	
M20×1.5	15 Nm (11.1 ft·lb$_f$)

– Mount and tighten oil drain plug ❷ with the magnet and a new seal ring.

Oil drain plug with magnet	
M12×1.5	20 Nm (14.8 ft·lb$_f$)

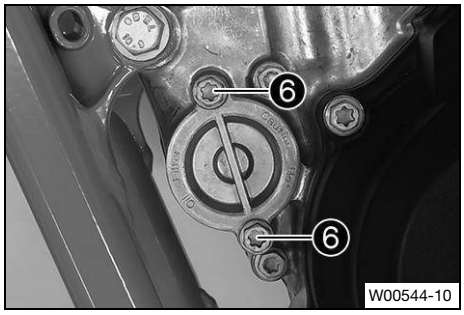

– Remove screws ❻. Take off the oil filter cover with the O-ring.

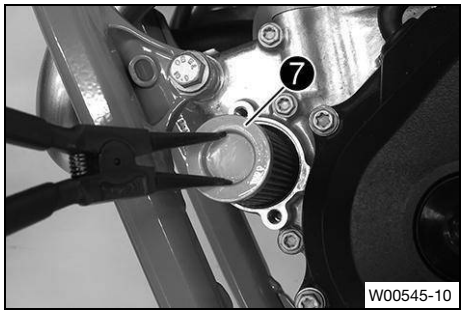

– Pull oil filter ❼ out of the oil filter housing.

Lock ring plier (51012011000)

– Allow the engine oil to drain completely.
– Thoroughly clean the parts and the sealing surface.

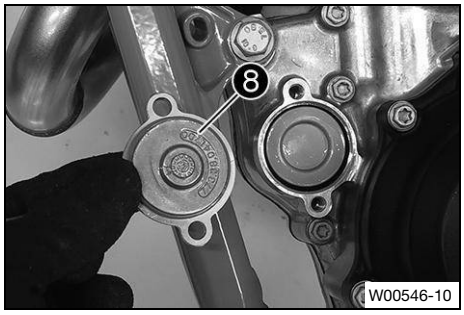

– Lay the motorcycle on its side and fill the oil filter housing to about ⅓ full with engine oil.
– Insert the new oil filter into the oil filter housing.
– Oil the O-ring of the oil filter cover and mount it together with oil filter cover ❽.
– Mount and tighten the screws.

Screw, oil filter cover	
M6	10 Nm (7.4 ft·lb$_f$)

– Stand the motorcycle upright.

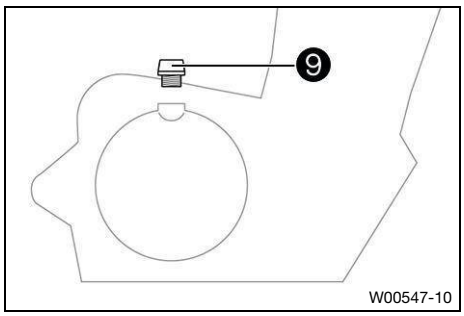

– Remove filler plug ❾ with the O-ring, and fill up with engine oil.

engine oil	
Engine oil (10W/50) (p. 175) fully synthetic	1.0 l (0.26 liq. gal_{US})

Note
Too little engine oil or poor-quality engine oil will result in premature wear of the engine.

– Mount and tighten the oil plug together with the O-ring.

DANGER
Danger of poisoning Exhaust gases are toxic and inhaling them may result in unconsciousness and death.
– Always ensure that there is sufficient ventilation when running the engine.
– Use suitable exhaust extraction when starting or running the engine in an enclosed space.

– Start the engine and check it for leaks.

Reworking
– Install the skid plate. (p. 99)
– Check the engine oil level. (p. 143)

18.4 Adding engine oil

Note
Too little engine oil or poor-quality engine oil will result in premature wear of the engine.

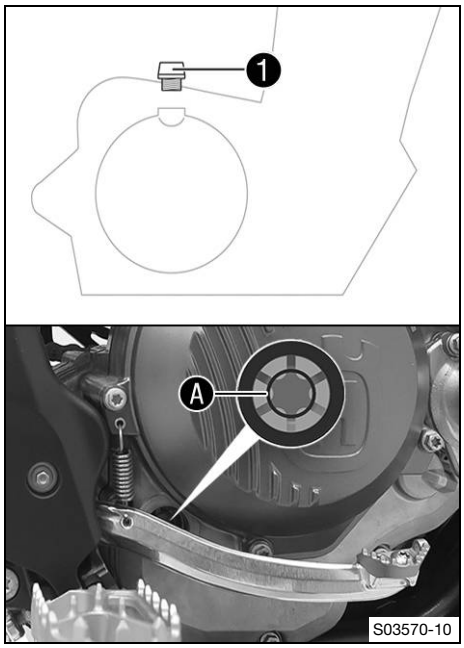

Main work

– Remove oil filler plug 1 with the O-ring from the clutch cover.
– Fill engine oil to the middle A of the level viewer.

engine oil	
Engine oil (10W/50) (p. 175) fully synthetic	1.0 l (0.26 liq. gal_{US})

Note
In order to achieve optimal engine oil performance, it is not advisable to mix different engine oils.
Husqvarna Mobility recommends changing the engine oil when necessary.

– Mount and tighten the oil plug together with the O-ring.

DANGER
Danger of poisoning Exhaust gases are toxic and inhaling them may result in unconsciousness and death.
– Always ensure that there is sufficient ventilation when running the engine.
– Use suitable exhaust extraction when starting or running the engine in an enclosed space.

– Start the engine and check it for leaks.

Reworking

– Check the engine oil level. (p. 143)

19.1 Cleaning the motorcycle

NOTE

Material damage Components can be damaged or destroyed if a high-pressure cleaner is used incorrectly.

The high pressure forces water into the electrical components, socket connectors, clutch cables, and bearings, etc.

Too high a pressure can cause malfunctions and destroy components.

– Do not direct the water jet directly on to electrical components, socket connectors, clutch cables, or bearings.
– Maintain a minimum distance between the nozzle of the high-pressure cleaner and the component.

Minimum distance	60 cm (23.6 in)

NOTE

Environmental hazard Hazardous substances cause environmental damage.

– Dispose of oils, grease, filters, fuel, cleaning agents, brake fluid, etc. correctly and in accordance with the applicable regulations.

Note

Clean the motorcycle regularly to maintain its value and appearance over a long period.

Avoid direct sunshine when cleaning the motorcycle.

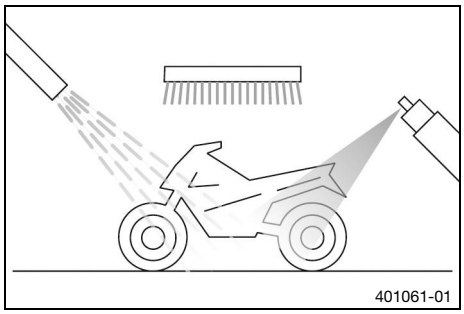

– Close off the exhaust system to keep water from entering.
– Remove the coarse dirt particles with a gentle water jet.
– Spray the heavily soiled parts with a standard commercial motorcycle cleaner and clean using a brush.

Never apply motorcycle cleaner to a dry vehicle; always rinse the vehicle with water first.

Environmentally neutral universal cleaning agent
(p. 178)

Note

Use warm water containing standard motorcycle cleaner and a soft sponge.

– Clean the motorcycle thoroughly with a soft water jet, then allow to dry.
– Remove the cover from the exhaust system.

WARNING

Danger of accidents Moisture and dirt impair the brake system.

– Brake carefully several times to dry out and remove dirt from the brake pads and the brake discs.

– After cleaning, ride the vehicle a short distance until the engine warms up.

Note
The heat produced causes water to evaporate at inaccessible locations in the engine and on the brake system.

– After the motorcycle has cooled off, lubricate all moving parts and pivot points.
– Clean the chain. (p. 89)

WARNING
Danger of accidents Oil, grease or wax on the brake discs reduces the brake action.
– Always keep the brake discs free of oil, fat and wax.
– Clean the brake discs with brake cleaner when necessary.

– Treat bare metal (except for brake discs and the exhaust system) with an anticorrosive.

Preserving materials (p. 178)

– Treat all plastic parts and powder-coated parts with a mild cleaning and care product.

Cleaning agents for plastics, glass, lacquers, metals, windshields and visors (p. 178)

(All EU models)
– Lubricate the steering lock.

Universal oil spray (p. 175)

19.2 Checks and maintenance steps for winter operation

WARNING
Danger of accidents Salt on the roads impairs the brake system.
– Brake carefully several times to remove salt from the brake linings and the brake discs.

WARNING
Danger of accidents Oil, grease or wax on the brake discs reduces the brake action.
– Always keep the brake discs free of oil, fat and wax.
– Clean the brake discs with brake cleaner when necessary.

Note
If you use the vehicle in winter, you must expect salt on the roads. You should therefore take precautions against aggressive road salt.

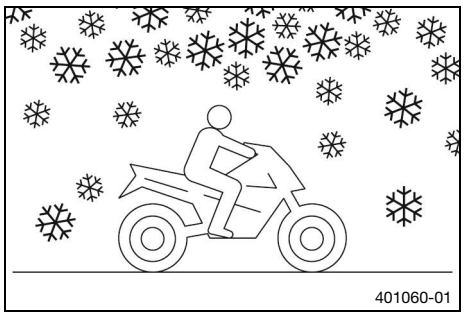

– Clean the motorcycle. (p. 148)
– Clean brake system.

After every trip on salted roads, thoroughly wash the brake calipers and brake pads with cold water and dry carefully. This should be done after the parts are cooled down and while they are installed.
After riding on salted roads, thoroughly clean the vehicle with cold water and dry it well.

Note
Warm water enhances the corrosive effects of salt.

– Treat the engine, swingarm, and all other bare or zinc-plated parts (except the brake discs) with a wax-based anticorrosive.

Corrosion inhibitor must not come into contact with the brake discs. This would severely lower the braking effect.

– Clean the chain. (p. 89)

20.1 Storage

WARNING

Danger of poisoning Fuel is harmful to health.

- Do not allow fuel to come into contact with skin, eyes, or clothing.
- Consult a doctor immediately if fuel has been ingested.
- Do not inhale fuel vapors.
- Rinse the affected area immediately with plenty of water in the event of contact with skin.
- Rinse eyes thoroughly with water and consult a doctor immediately if fuel comes into contact with eyes.
- If fuel spills on to your clothing, change the clothing.
- Store fuel properly in a suitable container and keep out of the reach of children.

Note

If the vehicle will not be ridden for an extended period, additional steps are recommended.

Before storing the motorcycle, check all parts for function and wear. If service, repairs, or replacements are necessary, do this during the storage period (when authorized contractual partners are less busy). This allows you to avoid long waiting periods at the start of the season.

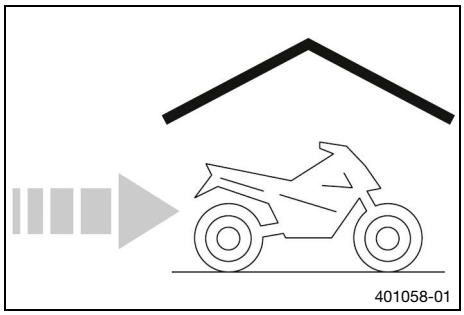

- When refueling for the last time before taking the motorcycle out of service, add fuel additive.

Fuel additive (p. 174)

- Refuel. (p. 50)

Tip

Fill the fuel tank completely as specified, using fuel with the lowest possible ethanol content.

- Clean the motorcycle. (p. 148)
- Change the engine oil and the oil filter, clean the oil screens. (p. 144)
- Check the frost protection and coolant level. (p. 130)
- Check the tire pressure. (p. 117)
- Remove the 12 V battery. (p. 119)
- Charge the 12 V battery. (p. 121)

Storage temperature of the 12 V battery without direct sunlight	0 °C … 35 °C (32.0 °F … 95.0 °F)

- Store the vehicle in a dry location that is not subject to large fluctuations in temperature.

Note

Husqvarna Mobility recommends picking up the motorcycle.

- Raise the motorcycle with a lift stand. (p. 64)

Preferably cover the motorcycle with a tarp or similar cover that is permeable to air.
Do not use non-porous materials because they prevent humidity from escaping and thus cause corrosion.

Note

Avoid running the engine of a motorcycle in storage for a short time only. Since the engine cannot warm up properly, the water vapor produced during combustion condenses and causes valves and the exhaust system to rust.

20.2 Preparing for use after storage

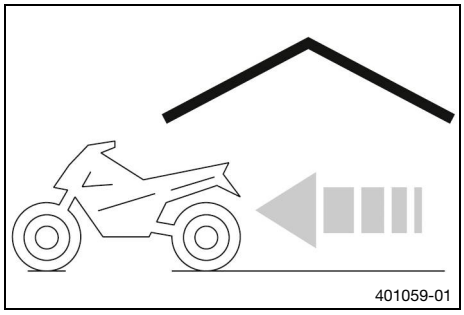

- Remove the motorcycle from the lift stand. (p. 64)
- Install the 12 V battery. (p. 120)
- Perform checks and maintenance measures when preparing for use. (p. 45)
- Take a test ride.

21.1 troubleshooting

Cause	Finding	Remedy
The engine does not turn over (starter motor)	Operating error 12 V battery discharged Main fuse blown Starter relay defective Starter motor defective	– Carry out the starting procedure. (p. 45) – Charge the 12 V battery. (p. 121) – Check the charging voltage. – Check the open-circuit current. – Check the stator winding of the alternator. – Change the main fuse. (p. 124) – Check the starter relay. – Check the starter motor.
The engine turns but does not start	Operating error Quick-lock coupling not joined Error in the circuit, OCU LED **A** and **D** lights up. Idle speed is not set correctly Spark plug sooty or wet Plug gap of spark plug too wide Faulty ignition Short-circuit cable in wiring harness frayed, stop button or emergency OFF switch faulty Error in the electronic fuel injection	– Carry out the starting procedure. (p. 45) – Join quick-lock couplings. – Check the electrical system. – Adjust the idle speed. (p. 138) – Clean and dry the spark plug and spark plug connector, or change if necessary. – Adjust plug gap. Plug gap of spark plug: 1.0 mm (0.039 in) – Check the ignition system. – Check the wiring harness. (Visual check). – Check the electrical system. – Read out the fault memory using the diagnostics tool.
Engine does not speed up	Error in the electronic fuel injection Faulty ignition	– Read out the fault memory using the diagnostics tool. – Ignition coil - check the secondary winding. – Check the spark plug connector. – Check the stator winding of the alternator.
Engine has too little power	Air filter is very dirty Fuel filter is very dirty Fuel screen is very dirty Error in the electronic fuel injection Exhaust system leaks, deformed or too little damping material in the silencer Valve clearance too little Faulty ignition	– Clean the air filter and air filter box. (p. 81) – Change the fuel filter. – Change the fuel screen. (p. 142) – Read out the fault memory using the diagnostics tool. – Check exhaust system for damage. – Change the damping material on the main silencer. (p. 85) – Adjust the valve clearance.

Cause	Finding	Remedy
		– Ignition coil - check the secondary winding. – Check the spark plug connector. – Check the stator winding of the alternator.
The engine dies during the trip	Lack of fuel Error in the circuit, OCU LED **A** and **D** lights up.	– Refuel. (p. 50) – Check the electrical system.
Engine overheats	Too little coolant in cooling system Too little air stream Radiator fins very dirty Foam formation in the cooling system Bent radiator hose Thermostat defective Defect in the radiator fan system, OCU LED **E** lights up.	– Check the transmission and cooling system for leaks. – Check the coolant level. (p. 131) – Switch off the engine when standing. – Clean the radiator fins. – Drain the coolant. (p. 132) – Refill the coolant. (p. 132) – Change the radiator hose. – Check the thermostat. Opening temperature: 70 °C (158.0 °F) – Check the radiator fan. – Check the electrical system.
Malfunction indicator lamp lights up or flashes	Error in the electronic fuel injection	– Check wiring for damage and electrical plug-in connectors for corrosion and damage. – Read out the fault memory using the diagnostics tool.
High oil consumption	Engine vent hose bent The engine oil level is too high The engine oil is too thin (low viscosity) Piston and cylinder worn	– Route the vent hose without bends or change it if necessary. – Check the engine oil level. (p. 143) – Change the engine oil and the oil filter, clean the oil screens. (p. 144) – Measure the piston/cylinder mounting clearance.
12 V battery discharged	The 12-V battery is not being charged by the alternator unwanted electrical load	– Check the charging voltage. – Check the stator winding of the alternator. – Check the open-circuit current.
Values in combination instrument deleted (time, stop watch, lap times)	The combination instrument battery is empty	– Change combination instrument battery. (p. 128)
Fault with the lighting system or horn.	Error in the circuit, OCU LED **B** or **C** lights up.	– Check the electrical system.

22.1 Flash codes

Note
The blink codes are only displayed by the derestricted version of the vehicle.

Blink code for malfunction indicator light	Malfunction indicator light lights up
Error level condition	Lambda sensor heater – circuit fault Time: ≥ 3 s Oxygen sensor heater - input signal too high Time: ≥ 0.1 s Oxygen sensor - failure in circuit Time: ≥ 60 s Oxygen sensor - input signal too high Time: ≥ 60 s Fuel vapor valve – input signal too low Fuel vapor valve – input signal too high THREF – internal malfunction of the engine control unit

Blink code for malfunction indicator light	02: Malfunction indicator light flashes 2x short
Error level condition	Crankshaft speed sensor – circuit fault The induction manifold pressure sensor delivers a normal signal (engine running), while the crankshaft speed sensor does not generate any signal at all. Time: ≥ 2.0 s

Blink code for malfunction indicator light	06: Malfunction indicator light flashes 6x short
Error level condition	Throttle valve position sensor circuit A – circuit fault Voltage: ≤ 0.352 V Time: ≥ 3 s Throttle valve position sensor circuit A – input signal too high Voltage: ≥ 4.785 V Time: ≥ 3 s

Blink code for malfunction indicator light	09: Malfunction indicator light flashes 9x short
Error level condition	Induction manifold pressure sensor – circuit fault Voltage: ≥ 4.121 V Time: ≥ 3 s Induction manifold pressure sensor – input signal too low Voltage: ≤ 0.215 V Time: ≥ 3 s

Blink code for malfunction indicator light	12: Malfunction indicator light flashes 1x long, 2x short
Error level condition	Coolant temperature sensor – circuit malfunction Voltage: ≥ 4.785 V Time: ≥ 3 s Coolant temperature sensor – input signal too low Voltage: ≤ 0.137 V Time: ≥ 3 s

Blink code for malfunction indicator light	13: Malfunction indicator light flashes 1x long, 3x short
Error level condition	Intake air temperature sensor - circuit fault Voltage: ≥ 4.824 V Time: ≥ 3 s Intake air temperature sensor – input signal too low Voltage: ≤ 0.195 V Time: ≥ 3 s

Blink code for malfunction indicator light	15: Failure indicator light flashes 1x long, 5x short
Error level condition	Tilt sensor – input signal too low Voltage: ≤ 0.176 V Time: ≥ 25.5 s Tilt sensor – open / input signal too high Voltage: ≥ 4.57 V Time: ≥ 25.5 s

Blink code for malfunction indicator light	21: Malfunction indicator light flashes 2x long, 1x short
Error level condition	Battery voltage – input voltage too high Engine control unit power supply: ≥ 15.98 V Time: ≥ 2 s

Blink code for malfunction indicator light	22: Failure indicator light flashes 2x long, 2x short
Error level condition	Gear position sensor – input signal too low Time: ≥ 0.1 s Gear position sensor – input signal too high Time: ≥ 0.1 s Gear position sensor malfunction

Blink code for malfunction indicator light	33: Malfunction indicator lamp flashes 3x long, 3x short
Error level condition	Injection valve cylinder 1 – circuit fault Time: ≥ 2.0 s

Blink code for malfunction indicator light	37: Malfunction indicator light flashes 3x long, 7x short
Error level condition	Ignition coil – circuit fault Time: ≥ 2.0 s

Blink code for malfunction indicator light	41: Malfunction indicator light flashes 4x long, 1x short
Error level condition	Fuel pump controller – short circuit to ground/open circuit The engine is switched off: ≥ 3 s Fuel pump controller – open circuit/short circuit to plus The engine is switched off: ≥ 3 s

Blink code for malfunction indicator light	43: Failure indicator light flashes 4x long, 3x short
Error level condition	Radiator fan control – short circuit to ground or open circuit Radiator fan control – short circuit to plus

Blink code for malfunction indicator light	65: Failure indicator light flashes 6x long, 5x short
Error level condition	EEPROM – malfunction Read data and write data are different.

23.1 Engine

23.1.1 Technical data - engine

Design	1-cylinder 4-stroke engine, water-cooled
Displacement	349.7 cm³ (21.340 in³)
Stroke	57.5 mm (2.264 in)
Bore	88 mm (3.46 in)
Compression ratio	13.7:1
Control	DOHC, four valves controlled via cam lever, drive via timing chain
Valve diameter, intake	29.10 mm (1.1457 in)
Valve diameter, exhaust	36.30 mm (1.4291 in)
Valve clearance	
Intake at: 20 °C (68.0 °F)	0.08 mm … 0.15 mm (0.0031 in … 0.0059 in)
Exhaust at: 20 °C (68.0 °F)	0.10 mm … 0.19 mm (0.0039 in … 0.0075 in)
Crankshaft bearing	2-cylinder roller bearing
Big (bottom) end bearing	Plain bearing
Wrist pin bearing	Bearing bush
Piston	Forged light alloy
Piston rings	1 compression ring, 1 oil scraper ring
Engine lubrication	Pressure circulation lubrication with 2 trochoidal pumps
Primary transmission	24:72
Clutch	Multidisc clutch in oil bath/hydraulically activated/damped
Transmission	6 speed transmission, claw shift
Gear ratios	
1st gear	13:33
2nd Gear	16:30
3rd Gear	18:26
4th Gear	22:26
5th Gear	23:23
6th Gear	26:22
Alternator	• 14 V • 200 W (0.268 hp)
Ignition system	Contactless controlled fully electronic ignition with digital ignition adjustment
Spark plug	NGK LMAR9AI-10

Plug gap of spark plug	1.0 mm (0.039 in)
Cooling	Liquid cooling, permanent circulation of coolant by water pump
Starting aid	Starter motor
Idle speed	1,950 rpm … 2,050 rpm (32.50 Hz … 34.17 Hz)

23.1.2 Capacities - engine

engine oil	
Engine oil (10W/50) (p. 175) fully synthetic	1.0 l (0.26 liq. gal_{US})
coolant	
Coolant (p. 176) Antifreeze protection to at least: −25 °C (−13.0 °F)	0.95 l (0.251 liq. gal_{US})

23.2 Chassis

23.2.1 Technical data - chassis

Frame	Central tube frame made of chrome molybdenum steel tubing
Suspension travel:	
front	300 mm (11.81 in)
rear	300 mm (11.81 in)
Triple clamp offset	22 mm (0.87 in)
Brake system	Disc brakes, floating brake calipers
Brake discs diameter	
front	260 mm (10.24 in)
rear	220 mm (8.66 in)
Brake disc wear limit **(All standard models)**	
front	2.5 mm (0.098 in)
rear	3.5 mm (0.138 in)
Brake disc wear limit **(All special models)**	
front	2.5 mm (0.098 in)
rear	3.7 mm (0.146 in)
Final drive **(All standard models)**	14:46 (13:46)
Final drive **(All special models)**	14:52 (13:52)

Chain	520
Rear sprockets available	• 46 teeth • 48 teeth • 50 teeth
Steering head angle	63.9° (1.115 rad)
Wheelbase	1,489 ±10 mm (58.62 ±0.39 in)
Seat Height unloaded	952 mm (37.48 in)
Ground clearance unloaded	343 mm (13.50 in)
Weight without fuel approx.	
(All standard models)	109.2 kg (240.74 lb)
(All special models)	110.7 kg (244.05 lb)
Maximum permissible front axle load	145 kg (319.7 lb)
Maximum permissible rear axle load	190 kg (418.9 lb)
Maximum permissible total weight	335 kg (738.5 lb)

23.2.2 Technical data - tires

Off-road tire pressure	
front	1.0 bar (14.5 psi)
rear	1.0 bar (14.5 psi)
Street tire pressure	
front	2.0 bar (29.0 psi)
rear	2.0 bar (29.0 psi)

Validity	Tire front	Rear tire
(All EU models)	**90/90 - 21 M/C 54R M+S TT** Michelin Enduro Medium	**140/80 - 18 M/C 70R M+S TT** Michelin Enduro Medium
(BR models)	**90/90 - 21 M/C 54M M+S TT** Metzeler 6 Days Extreme	**140/80 - 18 M/C 70M M+S TT** Metzeler 6 Days Extreme
The tires specified represent one of the possible series production tires. For alternative manufacturers, if any, contact an authorized manufacturer or qualified tire dealership. If local road approval regulations apply, these and the respective technical specifications must be observed.		

23.2.3 Capacities - vehicle

Total fuel tank capacity, approx.	
(All EU models) Super unleaded (ROZ 95) (p. 174)	8.0 l (2.11 liq. gal_{US})
(BR models) Super unleaded, type C (ROZ 95/RON 95/PON 91) (p. 174)	

23.3 Electrics

23.3.1 Battery

12-V battery	HJTZ5S-FP-C	Lithium-ion battery Battery voltage: 12 V Nominal capacity: 2.0 Ah Maintenance-free
Button cell	CR 2430	Battery voltage: 3 V

23.3.2 Fuses

Fuse	58011109120	20 A

23.3.3 Lamps

Dashboard illumination and indicator lights	LED	
Low beam	LED	
Parking light	LED	
high beam	LED	
Turn signal	RY10W / Sockel BAU15s	12 V 10 W (0.013 hp)
Brake light	LED	
Tail light	LED	
License plate lighting	LED	

23.4 Fork

23.4.1 Technical data - fork (All standard models)

Fork part number	A390C167Z402000

Compression damping	
Comfort	17 clicks
Standard	15 clicks
Sport	7 clicks
Rebound damping	
Comfort	19 clicks
Standard	17 clicks
Sport	9 clicks

Spring length with preload spacer(s)	457 mm (17.99 in)
Spring rate	
Rider's weight: 65 kg … 75 kg (143.3 lb … 165.3 lb)	4.6 N/mm (26.27 lb_f/in)
Rider's weight: 75 kg … 85 kg (165.3 lb … 187.4 lb)	4.8 N/mm (27.41 lb_f/in)
Rider's weight: 85 kg … 95 kg (187.4 lb … 209.4 lb)	5.0 N/mm (28.55 lb_f/in)
Fork length	940 mm (37.01 in)

23.4.2 Capacities - fork (All standard models)

Oil capacity, outer assembly	
Fork oil (48601166S1) (SAE 4) (p. 175)	350 ml (11.83 fl. oz_{US})
Oil capacity, cartridge	
Fork oil (48601166S1) (SAE 4) (p. 175)	175 ml (5.92 fl. oz_{US})

23.4.3 Technical data - fork (All special models)

Fork part number	A390C187Z402000

Compression damping	
Comfort	17 clicks
Standard	15 clicks
Sport	7 clicks
Rebound damping	
Comfort	19 clicks
Standard	17 clicks
Sport	9 clicks
Spring length with preload spacer(s)	457 mm (17.99 in)
Spring rate	
Rider's weight: 65 kg … 75 kg (143.3 lb … 165.3 lb)	4.6 N/mm (26.27 lb_f/in)
Rider's weight: 75 kg … 85 kg (165.3 lb … 187.4 lb)	4.8 N/mm (27.41 lb_f/in)
Rider's weight: 85 kg … 95 kg (187.4 lb … 209.4 lb)	5.0 N/mm (28.55 lb_f/in)
Fork length	940 mm (37.01 in)

23.4.4 Capacities - fork (All special models)

Oil capacity, outer assembly	
Fork oil (48601166S1) (SAE 4) (p. 175)	350 ml (11.83 fl. oz_{US})
Oil capacity, cartridge	
Fork oil (48601166S1) (SAE 4) (p. 175)	175 ml (5.92 fl. oz_{US})

23.5 Shock absorber

23.5.1 Technical data - shock absorber

Shock absorber part number	A390C463Z408000

Low-speed compression damping	
Comfort	18 clicks
Standard	15 clicks
Sport	12 clicks
High-speed compression damping	
Comfort	2.5 turns (900°)
Standard	2 turns (720°)
Sport	1.5 turns (540°)
Rebound damping	
Comfort	18 clicks
Standard	15 clicks
Sport	12 clicks
Preload	7 mm (0.28 in)
Spring rate	
Weight of rider: 65 kg … 75 kg (143.3 lb … 165.3 lb)	42 N/mm (239.8 lb_f/in)
Weight of rider: 75 kg … 85 kg (165.3 lb … 187.4 lb)	45 N/mm (257.0 lb_f/in)
Weight of rider: 85 kg … 95 kg (187.4 lb … 209.4 lb)	48 N/mm (274.1 lb_f/in)
Spring length	240 mm (9.45 in)
Gas assisted	10 bar (145 psi)
Static sag	40 mm (1.57 in)
Rider sag	110 mm (4.33 in)

Installation position	456.3 mm (17.965 in)

23.5.2 Shock absorber capacity

Oil capacity, shock absorber	
Shock absorber oil (50180751S1) (SAE 2.5) (p. 176)	Fill to the maximum mark

23.6 Tightening torque

23.6.1 Engine tightening torques

Oil nozzle for main bearing lubrication M4	0.8 Nm (0.59 ft·lb$_f$) **Loctite® 243**
Oil nozzle for clutch lubrication M4	0.8 Nm (0.59 ft·lb$_f$) **Loctite® 243**
Screw, oil nozzle bent for piston cooling M4	2.5 Nm (1.84 ft·lb$_f$) **Loctite® 243**
Jet, crank chamber ventilation M4	0.8 Nm (0.59 ft·lb$_f$) **Loctite® 243**
Hose clip, intake flange M4	3 Nm (2.2 ft·lb$_f$)
Detent arm screw M5	6 Nm (4.4 ft·lb$_f$) **Loctite® 243**
Screw, gear position sensor M5	5 Nm (3.7 ft·lb$_f$) **Loctite® 243**
Screw, clutch spring M5	6 Nm (4.4 ft·lb$_f$)
Oil pump cover screw for the suction/pressure pump M5	6 Nm (4.4 ft·lb$_f$) **Loctite® 243**
Oil pump idler gear fuse screw M5	6 Nm (4.4 ft·lb$_f$) **Loctite® 243**
Oil nozzle for piston cooling M5	2 Nm (1.5 ft·lb$_f$) **Loctite® 243**
Screw, bearing retainer M5	6 Nm (4.4 ft·lb$_f$) **Loctite® 243**

Stator screw M5	6 Nm (4.4 ft·lb$_f$) **Loctite® 2701**
Screw, crankshaft position sensor M5	6 Nm (4.4 ft·lb$_f$) **Loctite® 243**
Alternator cover grub screw M5	2 Nm (1.5 ft·lb$_f$) **Loctite® 243**
Shift star screw M6	10 Nm (7.4 ft·lb$_f$) **Loctite® 243**
Exhaust flange screw M6	10 Nm (7.4 ft·lb$_f$) **Loctite® 243**
Screw, guide rail M6	10 Nm (7.4 ft·lb$_f$) **Loctite® 243**
Screw, timing chain failure protection M6	10 Nm (7.4 ft·lb$_f$) **Loctite® 243**
Screw, starter motor M6	10 Nm (7.4 ft·lb$_f$)
Screw, outer clutch cover M6	10 Nm (7.4 ft·lb$_f$)
Screw, inner clutch cover M6	10 Nm (7.4 ft·lb$_f$)
Screw, clutch slave cylinder M6	10 Nm (7.4 ft·lb$_f$)
Screw, engine case M6	10 Nm (7.4 ft·lb$_f$)
Screw, oil filter cover M6	10 Nm (7.4 ft·lb$_f$)
Screw, shift lever M6	14 Nm (10.3 ft·lb$_f$) **Loctite® 243**
Screw, starter motor - intermediate gear M6	10 Nm (7.4 ft·lb$_f$) **Loctite® 243**
Screw, valve cover M6	8 Nm (5.9 ft·lb$_f$)
Stud, cylinder head M6	6 Nm (4.4 ft·lb$_f$) **Loctite® 243**
Nut, cylinder head M6	10 Nm (7.4 ft·lb$_f$)
Screw, water pump cover M6	10 Nm (7.4 ft·lb$_f$)

Nut, water pump impeller M6		6 Nm (4.4 ft·lb$_f$) **Loctite® 243**
Screw, outer clutch cover M6		10 Nm (7.4 ft·lb$_f$)
Screw, engine case M6×70		10 Nm (7.4 ft·lb$_f$)
Screw, water pump cover M6×40		10 Nm (7.4 ft·lb$_f$)
Screw, water pump cover M6		10 Nm (7.4 ft·lb$_f$)
Screw, ignition cover M6		10 Nm (7.4 ft·lb$_f$)
Fuel vapor retention system connection screw M6		5 Nm (3.7 ft·lb$_f$) **Loctite® 243**
Screw, fuel vapor retention system lock M6		5 Nm (3.7 ft·lb$_f$) **Loctite® 243**
Autodecompressor screw plug M7×1		15 Nm (11.1 ft·lb$_f$) **Loctite® 243**
Screw, camshaft bearing bridge M7×1 Engine oil	1.	5 Nm (3.7 ft·lb$_f$)
	2.	14 Nm (10.3 ft·lb$_f$)
Slide rail screw M8		15 Nm (11.1 ft·lb$_f$) **Loctite® 243**
Crankshaft clamp screw plug M8		10 Nm (7.4 ft·lb$_f$)
Crankshaft fixing screw M8		hand-tight
Screw plug, cam lever shaft M10×1		8 Nm (5.9 ft·lb$_f$)
Front sprocket screw M10		60 Nm (44.3 ft·lb$_f$) **Loctite® 243**
Chain tension adjuster finger follower shaft plug M10×1		8 Nm (5.9 ft·lb$_f$)
Screw, rotor M10×1		70 Nm (51.6 ft·lb$_f$) Engine oil
Coolant temperature sensor M10×1.25		12 Nm (8.9 ft·lb$_f$)
Oil channel screw plug M10×1		15 Nm (11.1 ft·lb$_f$) **Loctite® 243**

Stud, cylinder head M10×1.25		20 Nm (14.8 ft·lb$_f$) **Loctite® 243**
Nut, cylinder head M10×1.25 Engine oil	1.	10 Nm (7.4 ft·lb$_f$)
	2.	30 Nm (22.1 ft·lb$_f$)
	3.	180° (3.14 rad)
Screw, release for timing chain tensioner M10×1		8 Nm (5.9 ft·lb$_f$)
Spark plug M10×1		12 Nm (8.9 ft·lb$_f$)
Oil drain plug with magnet M12×1.5		20 Nm (14.8 ft·lb$_f$)
Pressure control valve plug M12×1.5		20 Nm (14.8 ft·lb$_f$)
Oil drain plug M14×1.5		15 Nm (11.1 ft·lb$_f$)
Nut, inner clutch hub M18×1.5		100 Nm (73.8 ft·lb$_f$)
Nut, primary gear wheel M18LH×1.5		120 Nm (88.5 ft·lb$_f$) **Loctite® 243**
Plug, oil screen M20×1.5		15 Nm (11.1 ft·lb$_f$)
Screw plug, timing chain tensioner M24×1.5		40 Nm (29.5 ft·lb$_f$)
Oil plug M24×3		hand-tight
Screw, ignition cover M24×1.5		18 Nm (13.3 ft·lb$_f$)
Screw plug, alternator cover M24×1.5		18 Nm (13.3 ft·lb$_f$)

23.6.2 Chassis tightening torques

Screw, radiator hoses clip	2.4 Nm (1.77 ft·lb$_f$)
Hose connector, active carbon filter	3.8 Nm (2.80 ft·lb$_f$)
Mushroom head screw for spoiler and seat	2.5 Nm (1.84 ft·lb$_f$)
Air boot for throttle body M4	2.8 Nm (2.07 ft·lb$_f$)
Screw, protective cover M4	2.1 Nm (1.55 ft·lb$_f$)

Screw, fixed grip M4	5 Nm (3.7 ft·lb_f) **Loctite® 243**
Screw, hose clamp, throttle body M4	5 Nm (3.7 ft·lb_f)
Remaining nuts on chassis M5	5 Nm (3.7 ft·lb_f)
Remaining screws on chassis M5	5 Nm (3.7 ft·lb_f)
Screw, throttle valve position sensor M5	3.5 Nm (2.58 ft·lb_f)
Screws on muffler M5	7 Nm (5.2 ft·lb_f)
Screw, battery terminal M5	2.5 Nm (1.84 ft·lb_f)
Screw, light switch M5	1 Nm (0.7 ft·lb_f)
Screw, turn signal switch M5	1 Nm (0.7 ft·lb_f)
Screw, frame protector M5	3 Nm (2.2 ft·lb_f)
Screw, throttle body cover M5	2.6 Nm (1.92 ft·lb_f)
Screw, shock absorber adjusting ring M5	5 Nm (3.7 ft·lb_f)
Nut, starter motor M6	4 Nm (3.0 ft·lb_f)
Remaining nuts on chassis M6	10 Nm (7.4 ft·lb_f)
Remaining screws on chassis M6	10 Nm (7.4 ft·lb_f)
Screw, throttle twist grip M6	5 Nm (3.7 ft·lb_f)
Screw, rear brake disc M6	14 Nm (10.3 ft·lb_f) **Loctite® 243**
Screw, front brake disc M6	14 Nm (10.3 ft·lb_f) **Loctite® 243**
Screw, chain slider guard M6	6 Nm (4.4 ft·lb_f) **Loctite® 243**
Screw, ball joint of push rod on rear brake cylinder M6	10 Nm (7.4 ft·lb_f) **Loctite® 243**
Fender screw M6	12 Nm (8.9 ft·lb_f)

Screw, seat installation M6	8 Nm (5.9 ft·lb$_f$)
Brake line guide screw on swingarm M6	4.5 Nm (3.32 ft·lb$_f$) Loctite® 243
Screw, connector support incl. dashboard M6	5 Nm (3.7 ft·lb$_f$)
Screw, ground wire on frame M6	10 Nm (7.4 ft·lb$_f$)
Screw, starter cable to starter relay M6	6 Nm (4.4 ft·lb$_f$)
Screw, hand lever M6	5 Nm (3.7 ft·lb$_f$)
Screw, battery holding bracket M6	6 Nm (4.4 ft·lb$_f$)
Screw, fuel tank spoiler on radiator M6	6 Nm (4.4 ft·lb$_f$)
Nut, throttle cable on throttle body M6	3 Nm (2.2 ft·lb$_f$)
Screw, wheel speed sensor, fork shoe M8	4.5 Nm (3.32 ft·lb$_f$)
Screw, upper steering stem M8	20 Nm (14.8 ft·lb$_f$) Loctite® 243
Nut, rear sprocket screw M8	35 Nm (25.8 ft·lb$_f$) Loctite® 2701
Nut, rim lock M8	12 Nm (8.9 ft·lb$_f$)
Brake pedal stop nut M8	20 Nm (14.8 ft·lb$_f$)
Remaining nuts on chassis M8	25 Nm (18.4 ft·lb$_f$)
Remaining screws on chassis M8	25 Nm (18.4 ft·lb$_f$)
Screw, front brake caliper M8	25 Nm (18.4 ft·lb$_f$) Loctite® 243
Screw, brake caliper on brake caliper bracket M8	25 Nm (18.4 ft·lb$_f$) Loctite® 243
Milled upper triple clamp screw M8	17 Nm (12.5 ft·lb$_f$)
Milled lower triple clamp screw M8	12 Nm (8.9 ft·lb$_f$)
Screw, fork shoe M8	15 Nm (11.1 ft·lb$_f$)

Screw, upper steering stem M8	17 Nm (12.5 ft·lb$_f$) **Loctite® 243**
Screw, manifold M8	15 Nm (11.1 ft·lb$_f$)
Handlebar clamp screw M8	20 Nm (14.8 ft·lb$_f$)
Screw, chain slider M8	15 Nm (11.1 ft·lb$_f$)
Screw, engine brace on engine M8×20	25 Nm (18.4 ft·lb$_f$) **Loctite® 243**
Screw, subframe, top M8	35 Nm (25.8 ft·lb$_f$) **Loctite® 243**
Screw, side stand attachment M8	33 Nm (24.3 ft·lb$_f$) **Loctite® 2701**
Screw, subframe, bottom M8	30 Nm (22.1 ft·lb$_f$) **Loctite® 2701**
Screw, engine brace on frame M8×15	25 Nm (18.4 ft·lb$_f$) **Loctite® 2701**
Screw, front sprocket cover M8	15 Nm (11.1 ft·lb$_f$)
Engine bracket screw M10	60 Nm (44.3 ft·lb$_f$)
Remaining nuts on chassis M10	45 Nm (33.2 ft·lb$_f$)
Remaining screws on chassis M10	45 Nm (33.2 ft·lb$_f$)
Screw, handlebar mount M10	40 Nm (29.5 ft·lb$_f$) **Loctite® 243**
Top shock absorber screw M10	60 Nm (44.3 ft·lb$_f$) **Loctite® 2701**
Bottom shock absorber screw M10	60 Nm (44.3 ft·lb$_f$) **Loctite® 2701**
Screw, sprocket M10	60 Nm (44.3 ft·lb$_f$) **Loctite® 2701**
Nut, brake pedal on frame M10	45 Nm (33.2 ft·lb$_f$)
Nut, pull rod on triangular lever M14×1.5	60 Nm (44.3 ft·lb$_f$)

Nut, swingarm pivot M16×1.5	100 Nm (73.8 ft·lb$_f$)
Screw, top steering head M20×1.5	12 Nm (8.9 ft·lb$_f$)
Screw, wheel spindle, front M20×1.5	35 Nm (25.8 ft·lb$_f$)
Nut, wheel spindle, rear M22	80 Nm (59.0 ft·lb$_f$)
Screw-in nozzle, cooling system M24×1.5	7.5 Nm (5.53 ft·lb$_f$) **Loctite® 243**
Outer diaphragm fitting **EJOT PT®** – 35×25	0.8 Nm (0.59 ft·lb$_f$)
Inner diaphragm fitting **EJOT PT®** – 35×25	1 Nm (0.7 ft·lb$_f$)
Spoke nipple, front wheel M4,5	6 Nm (4.4 ft·lb$_f$)
Spoke nipple, rear wheel M4,5	6 Nm (4.4 ft·lb$_f$)
Screw, intake air temperature sensor **EJOT DELTA PT®** – K50×18 – T20	0.7 Nm (0.52 ft·lb$_f$)
Screw, emergency OFF switch **EJOT PT®** – K50×18	2 Nm (1.5 ft·lb$_f$)
Combination switch screw **EJOT PT®** – K50×18	2 Nm (1.5 ft·lb$_f$)
Screw, seat installation **EJOT EJOFORM®** – K60×23/18	2.5 Nm (1.84 ft·lb$_f$)
Remaining screws on chassis **EJOT PT®** – K60×25 – Z	2 Nm (1.5 ft·lb$_f$)
Screw, fuel pump **EJOT PT®** – K60×30 – AF6	2.5 Nm (1.84 ft·lb$_f$)
Screw, air filter box on subframe **EJOT PT®** – 60×20	5 Nm (3.7 ft·lb$_f$)
Nut, linkage lever on angle lever M16x1,5	80 Nm (59.0 ft·lb$_f$)

24.1 Recycling

I02045-10

Further information is available at the following website.
Recycling information website: https://www.quefairedemesdechets.fr

A Technical terms

OBD	On-board diagnosis	Vehicle system, which monitors the specified parameters of the vehicle electronics
	Quickshifter	Function of the engine electronics for shifting up without clutch actuation

B Fuels

Super unleaded

Standards	
• ROZ 95	→ DIN EN 228

Super unleaded, type C

Standards	
• ROZ 95/RON 95/PON 91	→ ANP (Agência Nacional do Petróleo) #57

Fuel additive

Recommended supplier
MOTOREX®
• FUEL STABILIZER

C Operating supplies

Off-road chain spray

Recommended supplier

MOTOREX®
- CHAINLUBE OFF ROAD

Fork oil

Order details

- 48601166S1

Standards

• SAE 4	→ SAE

Universal oil spray

Recommended supplier

MOTOREX®
- JOKER 440 SYNTHETIC

Long-life grease

Recommended supplier

MOTOREX®
- Bike Grease 2000

Engine oil

Recommended supplier

MOTOREX®
- CROSS POWER 4T

Standards

→ JASO T903 MA2

• 10W/50	→ SAE

Properties

- fully synthetic

Engine oil

Recommended supplier

MOTOREX®
- TOP SPEED 4T

Standards

→ JASO T903 MA2

- 15W/50 → SAE

Properties

- Partially synthetic

High viscosity grease

Recommended supplier

SKF®

- LGHB 2

Silicone spray

Recommended supplier

MOTOREX®

- SILICONE SPRAY

Shock absorber oil

Order details

- 50180751S1

Standards

- SAE 2.5 → SAE

Oil for foam air filter

Recommended supplier

MOTOREX®

- RACING BIO AIR FILTER OIL

Brake fluid DOT 5.1

Recommended supplier

MOTOREX®

- BRAKE FLUID DOT 5.1

Standards

→ DOT

Coolant

Recommended supplier

MOTOREX®

- COOLANT M3.0

Properties	
• Antifreeze protection to at least	−25 °C (−13.0 °F)

D Cleaning agents

Chain cleaner

Recommended supplier

MOTOREX®

- CHAIN CLEAN

Preserving materials

Recommended supplier

MOTOREX®

- MOTO PROTECT

Air filter cleaning agent

Recommended supplier

MOTOREX®

- RACING BIO AIR FILTER CLEANER

Cleaning agents for plastics, glass, lacquers, metals, windshields and visors

Recommended supplier

MOTOREX®

- QUICK CLEANER

Environmentally neutral universal cleaning agent

Recommended supplier

MOTOREX®

- MOTO CLEAN UNIVERSAL

E Electrics

Low beam (LED)

Product code	
• LED	

Button cell (CR 2430)

Product code	
• CR 2430	
Properties	
• Battery voltage	3 V

12-V battery (HJTZ5S-FP-C)

Product code	
• HJTZ5S-FP-C	
Properties	
• Lithium-ion battery	
• Battery voltage	12 V
• Nominal capacity	2.0 Ah
• Maintenance-free	

Turn signal (R10W / Sockel BA15s)

Product code
• R10W / Sockel BA15s
Properties
• 12 V
• 10 W (0.013 hp)

Turn signal (RY10W / Sockel BAU15s)

Product code
• RY10W / Sockel BAU15s
Properties
• 12 V
• 10 W (0.013 hp)

Brake light (LED)

Product code

- LED

high beam (LED)

Product code

- LED

License plate lighting (LED)

Product code

- LED

Dashboard illumination and indicator lights (LED)

Product code

- LED

Parking light (LED)

Product code

- LED

Tail light (LED)

Product code

- LED

Fuse (58011109120)

Product code

- 58011109120

Properties

- 20 A

F List of symbols

F.1 Symbol colors

F.1.1 Yellow and orange symbols

Yellow and orange symbols indicate a malfunction status that requires prompt intervention. Active driving aids are also represented by yellow or orange symbols.

	Failure indicator light lights up/flashes yellow.
	Fuel level warning light lights up yellow.

F.1.2 Green and blue symbols

Green and blue symbols convey information.

	Turn signal indicator light flashes green.
	The high beam indicator light lights up blue.

1

12 V battery
- charging 121
- installation 120

12 V battery
- removing 119
- starting power 41

A

Accessories 14

Air filter
- cleaning 81
- installing 81
- removing 80

Air filter box
- cleaning 81

Air filter box cover
- installation 80
- removing 80

Auxiliary substances 14

B

Battery 161

Brake discs
- checking 100

Brake fluid
- adding front brake 102
- adding to rear brake 108

Brake fluid level
- checking on front brake 101
- checking on rear brake 107

Brake lining retainers
- checking on front brake 103
- checking on rear brake 109

Brake pad
- checking on front brake 103

Brake pads
- changing on the rear brake 109
- checking on rear brake 109
- of the front brake, changing 104

Brake pedal
- adjusting the basic position 106
- checking the free travel 106

C

Chain
- checking 92
- cleaning 89

Chain guide
- checking 92

Chain tension
- adjusting 91
- checking 90

Characteristic map of the throttle response
- adjusting 136

Checking basic chassis setting with
- rider's weight 54

Clothing 11

Clutch
- changing fluid 97
- checking/correcting fluid level 96

Clutch lever
- adjusting the basic position 97

Combination instrument
- adjusting 29
- Setting kilometers or miles 29
- Setting the clock 30

Compression damping
- adjusting the fork 60

Coolant
- antifreeze and coolant level, checking 130
- changing 133
- draining 132
- level, checking 131
- refilling 132

Customer service 15

D

Dashboard
- combination instrument battery, changing 128
- overview 28
- viewing the lap time 30

Defined use 12

Diagnostic connector 129

Difficult operating conditions 42
- dry sand 42
- high temperatures 44
- low temperature 44
- muddy surfaces 43
- slow speed 44
- snow 44
- wet sand 43
- wet surfaces 43

E

Engine
running in 41

Engine oil
adding 146
changing 144

Engine oil level
checking 143

Environment 12

F

Figures 14

Fork legs
adjusting the spring preload 61
bleeding 64
checking basic setting 60
cleaning the dust boots 65
installing 68
removing 67

Fork protector
installation 66
removing 66

Frame
checking 94

Frame protector
installation 67
removing 67

Front fender
installation 75
removing 74

Front sprocket
checking 92

Front wheel
installing 113
removing 112

Frost protection
checking 130

Fuel screen
changing 142

Fuel tank
installation 87
removing 85

Fuel tank cap
closing 24
opening 23

Fuse
changing the main fuse 124

Fuses 161

G

Gear shift lever
adjusting the basic position 140
checking the basic position 140

H

Hand grip
checking 95

Handbrake lever
checking the free travel 100
free travel, adjusting 100

Handlebar position 62
adjusting 63

Headlight
adjusting headlight range 127

Headlight bulb
changing 125

Headlight mask with headlight
installation 125
removing 124

Headlight setting
checking 126

High-speed compression damping
adjusting the shock absorber 55

I

idle speed
adjusting 138

Idle speed adjustment screw 25
Implied warranty 14
Improper use 13
Intended use 12

L

Lamps 161

Link fork
checking 94

Lower triple clamp
installation 70
removing 69

Low-speed compression damping
adjusting the shock absorber 54

M

Main fuse
changing 124

Main silencer
installation 84
removing 84
Manufacturer's warranty 14
Mapping
changing 138
Motorcycle
cleaning 148
raising with lift stand 64
removing from lift stand 64
Muffler
changing damping material 85

O

OCU 129
Oil filter
changing 144
Oil screens
cleaning 144
Owner's manual 12

P

Preparing for use
after storage 152
checks and maintenance measures when preparing for use 45
notes on preparing for first use 40
Protective clothing 11

Q

Quickshifter
activating 47
programming 96

R

Rear sprocket
checking 92
Rear wheel
installation 115
removing 114
Rebound damping
adjusting the fork 62
adjusting the shock absorber 56
Recycling 172
Refueling
fuel 50
Resources 14
Rider sag
adjusting 59

S

Safe use 11
Seat
mounting 79
removing 79
Service 14
Shock absorber
adjusting the spring preload 58
checking static sag 57
checking the rider sag 57
installation 77
removing 76
Side fairing right
installation 83
removing 82
Skid plate
installation 99
removing 99
Spare parts 14
Spoke tension
checking 117
Starting 45
Starting performance of lithium-ion batteries at low temperatures 41
Steering
locking 27
unlocking 27
Steering head bearing
lubricating 74
Steering head bearing play
adjusting 73
checking 73
Storage 151

T

Technical specifications
tires 160
Throttle cable play
adjusting 135
checking 135
Throttle cable routing
checking 94
Throttle valve position
programming 139
Tire condition
checking 116

Tire pressure
checking 117
Traction control
activating 46
Transportation 49
Turn signal bulb
changing 127

V

Vehicle identification number 18
VIN 18

W

Winter operation
checks and maintenance steps 149
Work rules 11

3402953en

21/08/2026

Husqvarna Mobility GmbH
Stallhofnerstraße 3 | 5230 Mattighofen