Owner's manual **2027**

FC 450
FX 450

Item no.: 3402948en

FOR | PIONEERS

Dear Husqvarna Mobility-customer,

Congratulations on your decision to purchase a Husqvarna motorcycle. You are now the owner of a state-of-the-art sports vehicle which, with proper care, will bring you pleasure for a long time to come.

We hope you enjoy your bike and have a safe journey at all times!

You can enter the serial numbers of your vehicle below to find the serial numbers more quickly if required:

Vehicle identification number (p. 18)	Stamp of the contractual partner
Engine number (p. 18)	

The owner's manual contained the latest information for this model series at the time of publication. However, minor differences due to further developments in design cannot be ruled out completely.
All specifications are non-binding. Husqvarna Mobility GmbH specifically reserve the right to modify or delete technical specifications, prices, colors, forms, materials, services, designs, equipment, etc. without prior notice and without specifying reasons, to adapt these to local conditions, as well as to stop production of a particular model without prior notice. Husqvarna Mobility assumes no liability for delivery options, deviations from figures and descriptions, as well as misprints and other errors. The models portrayed partly contain special equipment that does not belong to the regular scope of supply.

© 2026 Husqvarna Mobility GmbH, Mattighofen Austria
All rights reserved. Figures: Visus Studios/INDG/Husqvarna Mobility
Written permission from the copyright owner is required before any duplication or reproduction.

ISO 9001

Husqvarna Mobility GmbH applies quality assurance processes that lead to the highest possible product quality as defined in the ISO 9001 international quality management standard.

12 100 6061

REG.NO. 12 100 6061

Issuing institution:
TÜV SÜD Management Service GmbH

Husqvarna Mobility GmbH
Stallhofnerstraße 3
5230 Mattighofen, Austria

This document is valid for:

FC 450 (F2401527)

FC 450 US (F2475227)

FX 450 US (F2375527)

3402948en

18/09/2026

Table of contents

1 Means of representation 9

1.1 Conventions 9
1.1.1 Icons 9
1.1.2 Formatting 9
1.1.3 Abbreviations 9

2 Safety 10

2.1 Safety instructions 10
2.2 Ban on tampering 10
2.3 Safe use 11
2.4 Protective clothing 11
2.5 Work rules 11
2.6 Environment 12
2.7 Owner's manual 12
2.8 Use definition – intended use 12
2.9 Improper use 13

3 Important notes 14

3.1 Manufacturer's warranty, implied warranty 14
3.2 Auxiliary material, operating material 14
3.3 Spare parts, Technical Accessories 14
3.4 Service 14
3.5 Figures 14
3.6 Customer service 15

4 View of the vehicle 16

4.1 View of vehicle, front left (example) 16
4.2 View of vehicle, rear right (example) 17

5 Serial number 18

5.1 Vehicle identification number 18
5.2 Frame label 18
5.3 Engine number 18
5.4 Fork part number 18
5.5 Shock absorber part number 19

6 Controls 20

6.1 Clutch lever 20
6.2 Handbrake lever 20
6.3 Throttle grip 20
6.4 Kill switch 20
6.5 Electric starter 21
6.6 Combination switch 21
6.7 Overview of indicator lights (All FC models) 21
6.8 Overview of indicator lights (FX) 22
6.9 Dashboard 23
6.10 Opening the fuel tank cap 23
6.11 Closing the fuel tank cap 24
6.12 Cold start button 25
6.13 Idle speed adjustment screw 25
6.14 Gear shift lever 26
6.15 Brake pedal 26
6.16 Plug-in stand (All FC models) 27
6.17 Side stand (FX) 27

7 Preparing for use 28

7.1 Notes on preparing for first use 28
7.2 Running in the engine 29
7.3 Starting performance of lithium-ion batteries at low temperatures 30
7.4 Preparing the vehicle for difficult operating conditions 30
7.5 Preparing the vehicle for rides on dry sand 30
7.6 Preparing the vehicle for rides on wet sand 31
7.7 Preparing for rides on wet and muddy surfaces 32
7.8 Preparing vehicle for rides at high temperature or slow speed 32
7.9 Preparing the vehicle for low temperatures or snow 32

8 Riding instructions 33

8.1 Checks and maintenance measures when preparing for use 33
8.2 Starting the vehicle 33
8.3 Activating launch control 34
8.4 Activating traction control 35
8.5 Starting off 35
8.6 Quickshifter 36
8.7 Activate the quickshifter 36
8.8 Shifting, riding 36
8.9 Braking 37
8.10 Stop, park 38
8.11 Transportation 39
8.12 Refueling 40

9 Service schedule 41

9.1 Service schedule 41

10 Tuning the chassis 44

10.1 Checking the basic chassis setting with the rider's weight 44
10.2 Air suspension XACT (All FC models) 44
10.3 Compression damping of the shock absorber 45

10.4 Adjusting the low-speed compression damping of the shock absorber ... 45
10.5 Adjusting the high-speed compression damping of the shock absorber ... 46
10.6 Adjusting the rebound damping of the shock absorber ... 47
10.7 Measuring the dimension of the unloaded rear wheel ... 48
10.8 Checking the static sag of the shock absorber ... 49
10.9 Checking the rider sag of the shock absorber ... 49
10.10 Adjusting the preload for the shock absorber ... 50
10.11 Adjusting the rider sag ... 52
10.12 Checking the basic setting of the fork ... 53
10.13 Adjusting the fork air pressure **(All FC models)** ... 53
10.14 Adjusting the compression damping of the fork ... 55
10.15 Adjusting the rebound damping of the fork ... 56
10.16 Handlebar position ... 57
10.17 Adjusting the handlebar position ... 57

11 Service work on the chassis ... 60

11.1 Raising the motorcycle with a lift stand ... 60
11.2 Removing the motorcycle from the lift stand ... 60
11.3 Bleeding the fork legs ... 61
11.4 Cleaning the dust boots of the fork legs ... 62
11.5 Removing the fork protector ... 62
11.6 Installing the fork protector ... 63
11.7 Removing the frame protector ... 63
11.8 Installing the frame protector ... 63
11.9 Removing the skid plate **(FX)** ... 64
11.10 Installing the skid plate **(FX)** ... 64
11.11 Removing the fork legs ... 65
11.12 Installing the fork legs ... 65
11.13 Removing the lower triple clamp ... 66
11.14 Installing the lower triple clamp ... 67
11.15 Checking the steering head bearing play ... 70
11.16 Adjusting the steering head bearing play ... 71
11.17 Lubricating the steering head bearing ... 71
11.18 Removing the number plate ... 72
11.19 Mounting the number plate ... 72
11.20 Removing the front top fender ... 72
11.21 Installing the front top fender ... 73
11.22 Removing the shock absorber ... 73
11.23 Installing the shock absorber ... 75
11.24 Removing the seat ... 76
11.25 Mounting the seat ... 77
11.26 Removing air filter box cover ... 77
11.27 Installing air filter box cover ... 78
11.28 Removing the air filter ... 79
11.29 Installing the air filter ... 80
11.30 Cleaning the air filter and air filter box ... 81
11.31 Securing the air filter box cover ... 81
11.32 Removing the right side fairing ... 82
11.33 Installing the right side cover ... 83
11.34 Removing the muffler ... 83
11.35 Installing muffler ... 84
11.36 Changing the damping material on the main silencer ... 84
11.37 Removing the fuel tank ... 85
11.38 Installing the fuel tank ... 87
11.39 Checking the chain for dirt ... 89
11.40 Cleaning the chain ... 89
11.41 Checking the chain tension ... 90
11.42 Adjusting the chain tension ... 90
11.43 Checking the chain, rear sprocket, front sprocket, and chain guide ... 91
11.44 Checking the frame ... 94
11.45 Checking the swingarm ... 94
11.46 Checking the throttle cable routing ... 94
11.47 Checking the rubber grips ... 95
11.48 Program the Quickshifter ... 96
11.49 Adjusting the basic position of the clutch lever ... 96
11.50 Checking/correcting the fluid level of hydraulic clutch ... 96
11.51 Changing the hydraulic clutch fluid ... 97

12 Brake system ... 99

12.1 Checking the free travel on the hand brake lever ... 99
12.2 Adjusting the basic position of the hand brake lever ... 99
12.3 Checking the brake discs ... 99

12.4 Checking the brake fluid level for the front brake ... 100
12.5 Adding brake fluid for the front brake ... 101
12.6 Checking that the brake pads of the front brake are secured ... 102
12.7 Changing the brake pads of the front brake ... 103
12.8 Checking the free travel of the brake pedal ... 105
12.9 Adjusting the basic position of the brake pedal ... 105
12.10 Checking the brake fluid level for the rear brake ... 106
12.11 Adding brake fluid for the rear brake ... 107
12.12 Checking that the brake pads of the rear brake are secured ... 108
12.13 Changing the rear brake pads ... 108

13 Wheels, tires ... 111

13.1 Removing the front wheel ... 111
13.2 Installing the front wheel ... 112
13.3 Removing the rear wheel ... 112
13.4 Installing the rear wheel ... 113
13.5 Checking the tire condition ... 114
13.6 Checking the tire pressure ... 115
13.7 Checking the spoke tension ... 116

14 Electrics ... 117

14.1 Removing the 12 V battery ... 117
14.2 Installing the 12 V battery ... 118
14.3 Charging the 12 V battery ... 119
14.4 Changing the main fuse ... 121
14.5 Changing the fuse of the fuel pump ... 122
14.6 Diagnostic connector ... 123

15 Cooling system ... 124

15.1 Cooling system ... 124
15.2 Checking the frost protection and coolant level ... 124
15.3 Checking the coolant level ... 125
15.4 Draining the coolant ... 126
15.5 Refilling the coolant ... 126
15.6 Changing the coolant ... 127

16 Tuning the engine ... 129

16.1 Checking the play in the throttle cable ... 129
16.2 Adjusting the throttle cable play ... 129
16.3 Adjusting the characteristic map of the throttle response ... 130
16.4 Changing the mapping ... 132
16.5 adjusting the idle speed ... 132
16.6 Programming the throttle valve position ... 133
16.7 Checking the basic position of the gear shift lever ... 134
16.8 Adjusting the basic position of the gear shift lever ... 134

17 Service work on the engine ... 135

17.1 Changing the fuel screen ... 135
17.2 Checking the engine oil level ... 136
17.3 Changing the engine oil and oil filter, cleaning the oil screens ... 137
17.4 Adding engine oil ... 140

18 Cleaning, care ... 142

18.1 Cleaning the motorcycle ... 142

19 Storage ... 144

19.1 Storage ... 144
19.2 Preparing for use after storage ... 145

20 Troubleshooting ... 146

20.1 Troubleshooting ... 146

21 Flash codes ... 148

21.1 Engine control trouble code ... 148

22 Technical specifications ... 151

22.1 Engine ... 151
22.1.1 Technical data - engine ... 151
22.1.2 Capacities - engine ... 152
22.2 Chassis ... 152
22.2.1 Technical data - chassis ... 152
22.2.2 Technical data - tires ... 153
22.2.3 Capacities - vehicle ... 154
22.3 Electrics ... 154
22.3.1 Battery ... 154
22.3.2 Fuses ... 154
22.3.3 Lamps ... 154
22.4 Fork ... 154
22.4.1 Technical data - fork (FC 450) ... 154
22.4.2 Capacities - fork (FC 450) ... 155

22.4.3 Technical data - fork (FC 450 US) ... 155
22.4.4 Capacities - fork (FC 450 US) ... 156
22.4.5 Technical data - fork (FX) ... 156
22.4.6 Capacities - fork (FX) ... 157
22.5 Shock absorber ... 157
22.5.1 Technical data - shock absorber (FC 450) ... 157
22.5.2 Capacities - shock absorber (FC 450) ... 158
22.5.3 Technical data - shock absorber (FC 450 US) ... 158
22.5.4 Capacities - shock absorber (FC 450 US) ... 159
22.5.5 Technical data - shock absorber (FX) ... 159
22.5.6 Capacities - shock absorber (FX) ... 160
22.6 Tightening torque ... 160
22.6.1 Engine tightening torques ... 160
22.6.2 Chassis tightening torques ... 163

23 Recycling ... 167

23.1 Recycling ... 167

24 Relevant documents ... 168

24.1 Declaration of conformity ... 168
24.2 Declaration of conformity (UK) ... 170

Notes ... 173

A Technical terms ... 173

B Fuels ... 174

C Operating material ... 175

D Electrics ... 177

E Cleaning agents ... 178

F Icons ... 179

F.1 Symbol colors ... 179
F.1.1 Yellow and orange symbols ... 179
F.1.2 Green and blue symbols ... 179

Index ... 180

1.1 Conventions

1.1.1 Icons

✓	Indicates a desired result (e.g. of a work step or a function).
✗	Indicates an undesired result (e.g. of a work step or a function).
	All work marked with this symbol requires specialist knowledge and technical understanding. Ensure that this work is carried out or supervised by trained personnel from an authorized contractual partner, and that any special tools required are used.
	Indicates a page reference.
	Indicates information with more details.
	Indicates a tip, e.g. to simplify work.
»	Indicates the result from a test step.
◀	Indicates the end of an activity, including any rework.

1.1.2 Formatting

Proprietary name	Indicates a proprietary name.
Name ®	Indicates a protected name.
Brand ™	Indicates a brand available on the open market.
Underlined terms	Refer to technical details of the vehicle or indicate technical terms that are explained in the glossary.

1.1.3 Abbreviations

2-pc.	two-part
Part no.	Part number
or	respectively
approx.	circa
etc.	et cetera
poss.	possibly/possible
if necessary	if necessary
cmpl.	complete
min.	at least
no.	number
no fig.	no figure
s.	see
among others	among others/not limited to
and the like	and the like
etc.	et cetera
cf.	compare
e.g.	for example

2.1 Safety instructions

Function of the safety instruction

Safety instruction brings attention to dangers when handling the product. Hazards are classified, named, described, and supplemented with information on how to avoid them.

- If there is a safety instruction before a list of instructions, the danger exists throughout the entire activity.
- If there is a safety instruction immediately before an instruction, the next step presents a danger.

Safety instruction layout

All safety instructions are identified by a signal word and a warning symbol. The combination of signal word and warning symbol determines the degree of danger.

DANGER
Indicates an imminent danger that leads to serious injury or death.

WARNING
Indicates a potentially imminent danger that could lead to serious injury or death.

CAUTION
Indicates a potentially imminent danger that can lead to minor or slight injuries.

NOTE
Indicates a situation that can lead to damage to the product or the product environment.

NOTE
Indicates a situation that can lead to environmental damage.

2.2 Ban on tampering

No changes may be made to the noise control equipment and components.

Tampering that is prohibited

- Removing or disabling any devices or components used for noise control before the new vehicle is sold or delivered to the end customer.
- Removing or disabling any device or component used for noise control for purposes other than service, repair, or replacement during the service life of the vehicle.
- Use of the vehicle after a device or component used for noise control has been removed, disabled, or inadequately maintained.

Examples of prohibited tampering

- Removing or drilling through rear mufflers, baffle plates, manifolds, or other components that conduct exhaust gases.
- Removing or puncturing parts of the intake system.
- Replacing moving parts of the vehicle, or parts of the exhaust system or intake system, with parts other than those specified by the manufacturer.

2.3 Safe use

DANGER
Danger of accidents A rider who is not fit to ride poses a danger to themself and to others.
– Do not operate the vehicle if you are not fit to ride due to alcohol, drugs, or medication.
– Do not operate the vehicle if you are physically or mentally incapable of doing so.

DANGER
Danger of poisoning Exhaust gases are toxic and inhaling them may result in unconsciousness and death.
– Always ensure that there is sufficient ventilation when running the engine.
– Use suitable exhaust extraction when starting or running the engine in an enclosed space.

WARNING
Danger of burns Some vehicle components become hot when the vehicle is operated.
– Do not touch any parts such as the exhaust system, radiator, engine, damper, or brake system before the vehicle parts have cooled down.
– Allow the vehicle parts to cool down before performing any work on the vehicle.

The vehicle should only be used when it is in perfect technical condition, for its intended purpose, and in a safe and environmentally-friendly manner.
The vehicle must only be used by trained persons.
Have any faults that impair safety immediately remedied by an authorized contractual partner.
Observe the information and warning stickers on the vehicle.

2.4 Protective clothing

WARNING
Risk of injury Missing or inadequate protective clothing increases the risk of injury.
– Wear appropriate protective clothing such as helmet, boots, gloves as well as pants and a jacket with protectors on all rides.
– Always wear protective clothing that is in good condition and meets the legal regulations.

In the interest of your own safety, Husqvarna Mobility recommends that you only operate the vehicle while wearing protective clothing.

2.5 Work rules

Unless specified otherwise, the ignition must be switched off during all work (models with ignition lock, models with transponder key) or the engine must be at a standstill (models without ignition lock or transponder key).
Special tools are required for some work. The tools are not part of the vehicle, but can be ordered using the number in parentheses. Example: bearing puller (15112017000)
Unless otherwise noted, normal conditions apply to all tasks and descriptions.

Ambient temperature	20 °C (68.0 °F)
Ambient air pressure	1,013 mbar (14.69 psi)
Relative air humidity	60 ±5 %

During assembly, use new parts to replace parts which cannot be reused (e.g. self-locking screws and nuts, expansion screws, seals, sealing rings, O-rings, pins, and lock washers).

A thread lock (e.g. **Loctite®**) is required for some screw connections. Observe the manufacturer's specific instructions for use.

If thread lock (e.g. **Precote®**) has already been applied to a new part, do not apply any additional thread lock.

After disassembly, clean the parts that are to be reused and check them for damage and wear. Replace damaged or worn parts.

After completing a repair or service, check the operating safety of the vehicle.

2.6 Environment

If you use your motorcycle responsibly, you can ensure that problems and conflicts do not occur. The future of motorcycling also depends on using motorcycles legally, being environmentally conscious and respecting the rights of others.

When disposing of used oil, other operating and auxiliary fluids, and used components, the laws and regulations of the respective country must be observed.

As motorcycles are not subject to the EU regulations governing the disposal of end-of-life vehicles, there are no legal regulations that pertain to the disposal of an end-of-life motorcycle. An authorized partner will be happy to help.

2.7 Owner's manual

Read this owner's manual carefully and in full before riding off for the first time. The owner's manual contains information and tips on how to operate, handle, and service your vehicle, as well as advice on optimum tuning and how to avoid injuries.

Tip

Save this owner's manual on your smartphone, for example, so that you can access it at any time.

An authorized contractual partner will be happy to assist you if you are unsure.

The owner's manual is an important component of the vehicle. If the vehicle is sold, the owner's manual must be downloaded again by the new owner.

The owner's manual can be downloaded multiple times using the QR code or the link on the delivery certificate.

The owner's manual is also available for download from authorized contractual partners and on the Husqvarna Mobility website.

International Husqvarna Mobility website: https://www.husqvarna-motorcycles.com

A printed copy can be ordered from the following address.

Website for printed copy: https://print.ktm.com

2.8 Use definition – intended use

(All FC models)

This vehicle has been designed and built to withstand the typical stresses and strains of racing. This vehicle complies with the currently valid regulations and categories of the top international motorsports organizations.

Note

Only use this vehicle on designated tracks away from public roads.

(FX)

This vehicle has been designed and built to withstand the typical stresses and strains of racing. This vehicle complies with the currently valid regulations and categories of the top international motorsports organizations.

Note

Only use this vehicle on designated tracks away from public roads.

This vehicle is designed for use in offroad endurance competition, and not primarily for use in motocross.

2.9 Improper use

The vehicle may only be used as intended.

Improper use can result in danger to people, property and the environment.

Any use of the vehicle beyond the intended and defined use constitutes misuse.

Improper use includes the use of operating and auxiliary materials that do not meet the required specifications for the respective use.

3 Important notes

3.1 Manufacturer's warranty, implied warranty

The work prescribed in the service schedule must only be carried out in an authorized contractual partner and confirmed in the **Husqvarna Mobility Dealer.net**, as otherwise all warranty claims will be void. Damage or secondary damage caused by tampering with and/or conversions on the vehicle are not covered by the manufacturer's warranty.

3.2 Auxiliary material, operating material

Use operating materials and auxiliary materials in accordance with the operating instructions and specifications.

3.3 Spare parts, Technical Accessories

For your own safety, only use spare parts and accessory products that are approved and/or recommended by Husqvarna Mobility and have them installed by an authorized contractual partner. Husqvarna Mobility accepts no liability for other products and any resulting damage or loss.

The part numbers of some spare parts and accessories are given in brackets in the respective descriptions. Your authorized contractual partner will be happy to advise you.

You can find the latest Husqvarna Mobility Technical Accessories for your vehicle at your authorized contractual partner and on the Husqvarna Mobility website.

International Husqvarna Mobility website: https://www.husqvarna-motorcycles.com

3.4 Service

A prerequisite for perfect operation and prevention of premature wear is that the service, care, and tuning work on the engine and chassis is properly carried out as described in the owner's manual. An incorrect suspension setting can lead to damage and breakage of chassis components.

Use of the vehicle under arduous conditions, such as on sand or on wet, dusty and muddy surfaces, can result in significantly increased wear of components, such as the powertrain, brake system, air filter, or suspension components. For this reason, it may be necessary to inspect or replace parts before the next scheduled service interval.

Please adhere to the prescribed run-in times and service intervals at all times. Strictly adhering to this will ensure a much longer service life for your motorcycle.

The relevant mileage or time interval is whichever occurs first.

A list of services that have already been carried out on the vehicle can be found in the Service area on the international Husqvarna Mobility website:

International Husqvarna Mobility website: https://www.husqvarna-motorcycles.com

Authorized contractual partners will be happy to answer any questions regarding the services performed.

The list of authorized contractual partners is available on the Husqvarna Mobility website.

3.5 Figures

Some of the figures in this document contain optional extras.

For clarity, some components may be shown disassembled or may not be shown at all. Disassembly is not always absolutely necessary in order to carry out the activities described. The textual information takes precedence.

3.6 Customer service

Your authorized partner will be happy to answer any questions you may have regarding your vehicle or about Husqvarna Mobility.

The list of authorized contractual partners can be found on the Husqvarna Mobility website.

International Husqvarna Mobility website: https://www.husqvarna-motorcycles.com

4 View of the vehicle

4.1 View of vehicle, front left (example)

L05186-01

1. Clutch lever (p. 20)
2. Combination switch (p. 21)
3. Fuel tank cap
4. Air filter box cover
5. Engine number (p. 18)
6. Shock absorber rebound adjustment
7. Gear shift lever (p. 26)
8. Cold start button (p. 25)

4.2 View of vehicle, rear right (example)

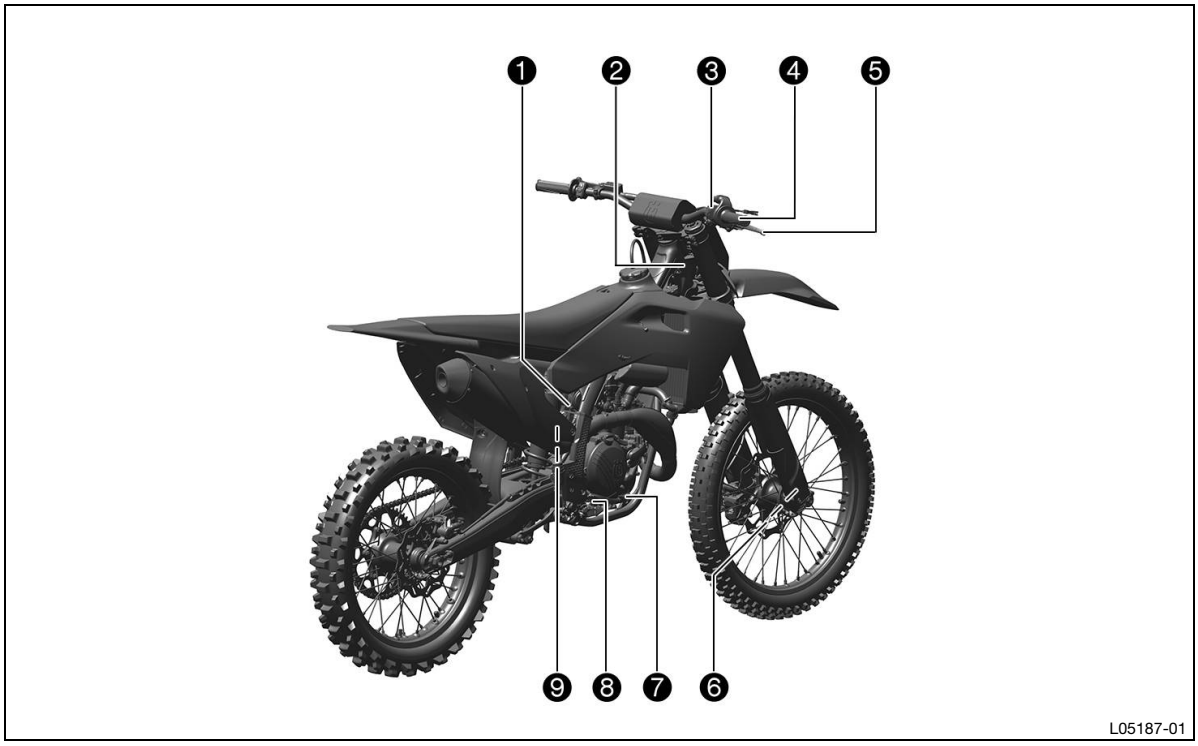

1. Shock absorber compression adjustment
2. Frame label (p. 18)
3. Kill switch (p. 20)
3. Electric starter (p. 21)
4. Throttle grip (p. 20)
5. Handbrake lever (p. 20)
6. Fork part number (p. 18)
7. Brake pedal (p. 26)
8. Level viewer, engine oil
9. Idle speed adjustment screw (p. 25)

5 Serial number

5.1 Vehicle identification number

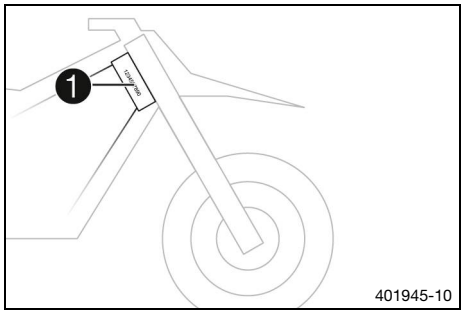

The vehicle identification number ❶ is stamped on the right-hand side of the steering head.

5.2 Frame label

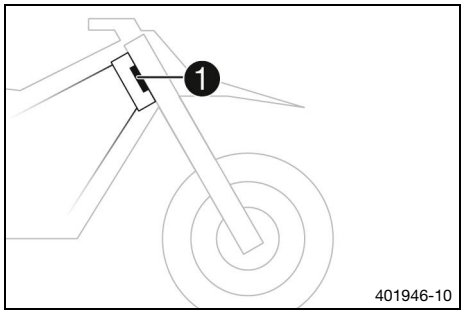

Frame label ❶ is attached to the front of the steering head.

5.3 Engine number

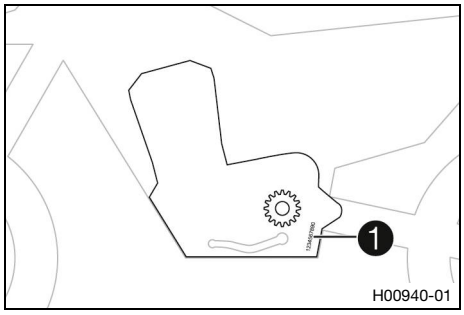

The engine number ❶ is located on the left side of the engine under the engine sprocket.

5.4 Fork part number

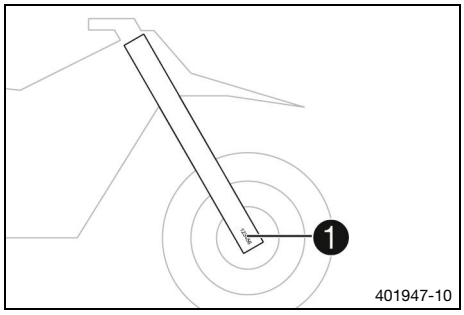

The fork article number ❶ is stamped on the outside of the axle clamp.

5.5 Shock absorber part number

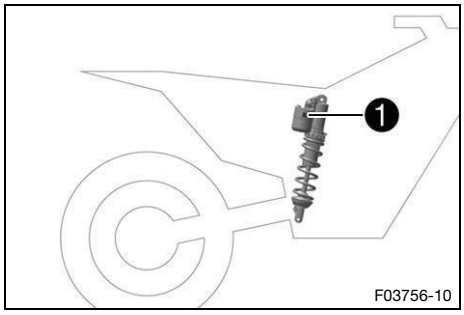

Shock absorber part number ❶ is stamped on the top right of the shock absorber.

6.1 Clutch lever

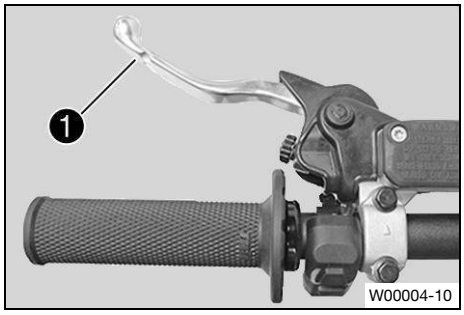

Clutch lever ❶ is fitted on the left side of the handlebar.
The clutch is activated hydraulically and adjusts itself automatically.

6.2 Handbrake lever

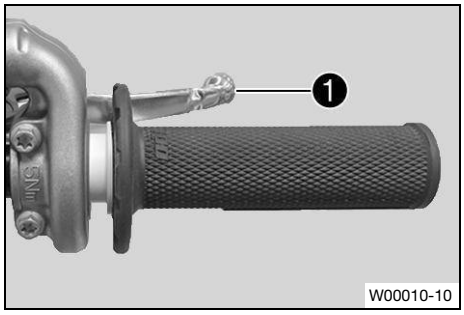

Hand brake lever ❶ is fitted on the right side of the handlebar.
The front brake is engaged using the hand brake lever.

6.3 Throttle grip

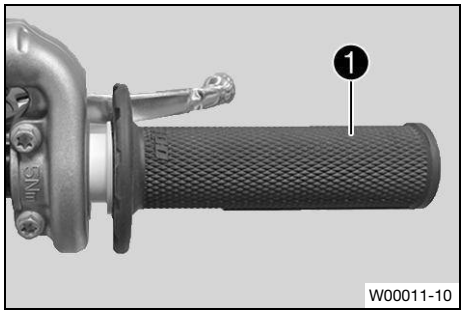

The throttle twist grip ❶ is fitted on the right side of the handlebar.

6.4 Kill switch

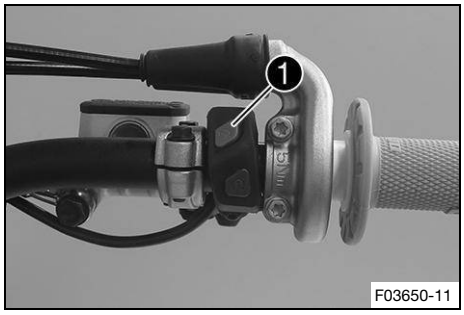

Kill switch ❶ is fitted on the right side of the handlebar.

Condition	Meaning
Kill button ⊗ is not pressed.	In this position, the ignition circuit is closed, and the engine can be started.
The kill button ⊗ is pressed and held.	In this position, the ignition circuit is interrupted, a running engine stops, and an engine at standstill will not start.

6.5 Electric starter

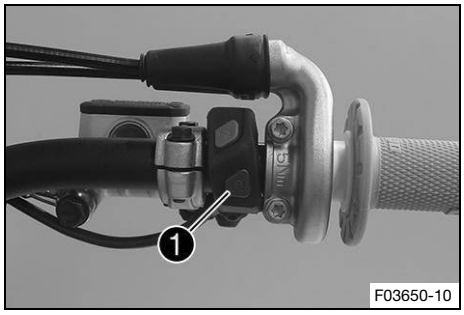

Electric starter ❶ is fitted on the right side of the handlebar.

Condition	Meaning
Electric starter in the basic position	No function.
Electric starter pressed	In this position, the starter motor is actuated.

6.6 Combination switch

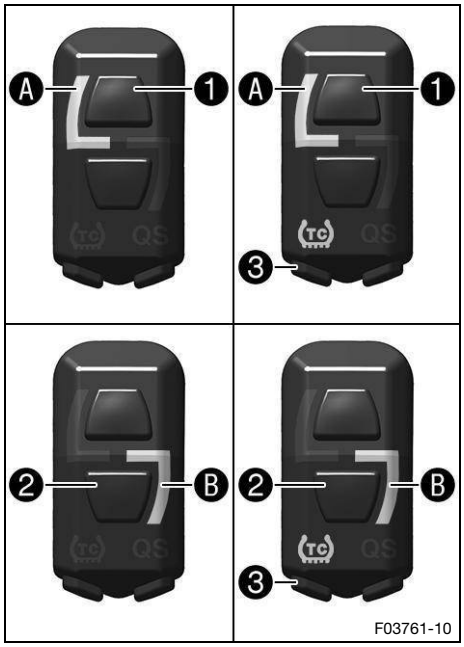

The combination switch is fitted on the left side of the handlebar.

The engine characteristic can be changed using button ❶ and button ❷ on the combination switch.

Traction control can be activated using the TC button ❸ on the combination switch.

Launch control and the **quickshifter** can also be activated using the combination switch.

Condition	Meaning
STANDARD ❶	STANDARD mapping is activated when the indicator light Ⓐ illuminates.
STANDARD ❶ with TC	STANDARD mapping with traction control is activated when the indicator light Ⓐ and the TC indicator light illuminate.
ADVANCED ❷	ADVANCED mapping is activated when the indicator light Ⓑ illuminates.
ADVANCED ❷ with TC	ADVANCED mapping with traction control is activated when the indicator light Ⓑ and the TC indicator light illuminate.

6.7 Overview of indicator lights (All FC models)

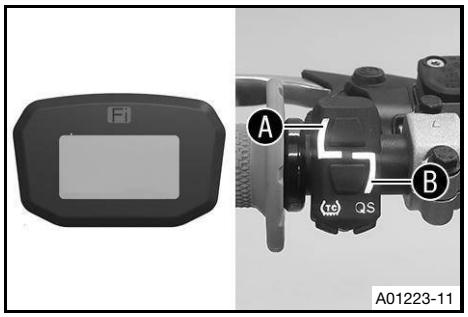

Condition		Meaning
Fi	Failure indicator light lights up or flashes orange. The malfunction indicator lamp also lights up if traction control is activated and the speed limiter intervenes.	The **OBD** has detected a failure in the vehicle electronics. Come safely to a halt, and contact an authorized dealer.
L	Indicator light Ⓐ lights up white.	STANDARD mapping is activated. This mapping is recommended for firm/hard surfaces.
7	Indicator light Ⓑ lights up green.	ADVANCED mapping is activated. This mapping is recommended for sandy/loose surfaces.
TC	TC indicator light lights up orange.	TC is not enabled or is currently intervening. The TC indicator lamp flashes if launch control is activated.
QS	Indicator light lights up blue.	The quickshifter is activated. The QS indicator light flashes when the Quickshifter is being programmed.

6.8 Overview of indicator lights (FX)

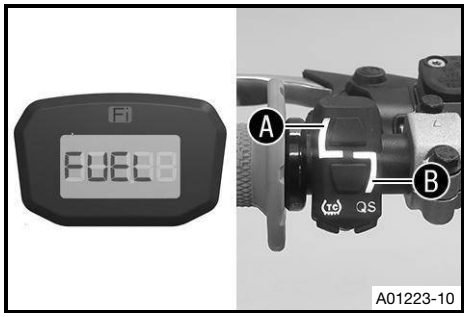

Condition		Meaning
Fi	Failure indicator light lights up or flashes orange. The malfunction indicator lamp also lights up if traction control is activated and the speed limiter intervenes.	The **OBD** has detected a malfunction in the vehicle electronics.
L	Indicator light Ⓐ lights up white.	STANDARD mapping is activated. This mapping is recommended for firm/hard surfaces.
7	Indicator light Ⓑ lights up green.	ADVANCED mapping is activated. This mapping is recommended for sandy/loose surfaces.
TC	TC indicator light lights up orange.	TC is not enabled or is currently intervening. The TC indicator light flashes if launch control is activated.
QS	Indicator light lights up blue.	The quickshifter is activated. The QS indicator light flashes when the Quickshifter is being programmed.
FUEL	**FUEL** is displayed	The fuel level of the fuel tank has reached the reserve mark.

6.9 Dashboard

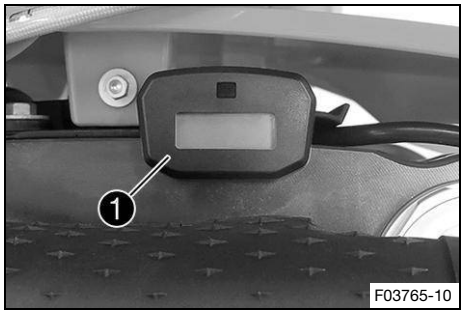

Dashboard ❶ is fitted in the front of the handlebar.
The dashboard shows the total operating hours of the engine.
The operating hours are counted when the engine is started and stopped when the engine is switched off.

Note
Nothing can be cleared or modified on the dashboard.
As soon as the diagnostics tool is connected, the hourmeter starts running.
Before longer diagnostic sessions, unplug the hourmeter behind the number plate.

6.10 Opening the fuel tank cap

DANGER
Fire hazard Fuel is highly flammable.
The fuel in the fuel tank expands when warm and can escape if overfilled.
- Do not refuel the vehicle in the vicinity of open flames, glowing, or smoldering objects.
- Make sure that nobody smokes in the vicinity of the vehicle during the refueling process.
- Switch off the engine for refueling.
- Make sure that no fuel is spilled; particularly not on hot parts of the vehicle.
- If any fuel is spilled, wipe it up immediately.
- Do not overfill the fuel tank.

WARNING
Danger of poisoning Fuel is harmful to health.
- Do not allow fuel to come into contact with skin, eyes, or clothing.
- Consult a doctor immediately if fuel has been ingested.
- Do not inhale fuel vapors.
- Rinse the affected area immediately with plenty of water in the event of contact with skin.
- Rinse eyes thoroughly with water and consult a doctor immediately if fuel comes into contact with eyes.
- If fuel spills on to your clothing, change the clothing.
- Store fuel properly in a suitable container and keep out of the reach of children.

NOTE
Environmental hazard Improper handling of fuel is dangerous to the environment.
- Do not allow fuel to enter the groundwater, the soil, or the sewage system.

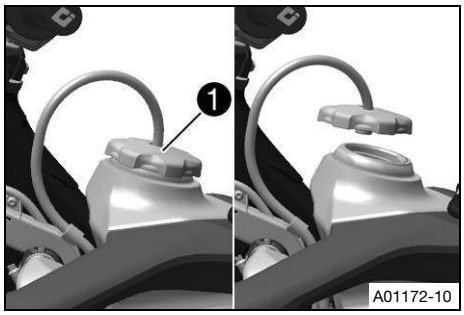

(All FC models)
- Turn fuel tank cap ❶ counterclockwise and lift it off.

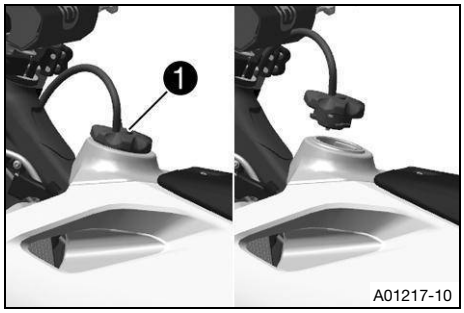

(FX)

– Press release button ❶, turn the fuel tank cap counter-clockwise, and lift it off.

6.11 Closing the fuel tank cap

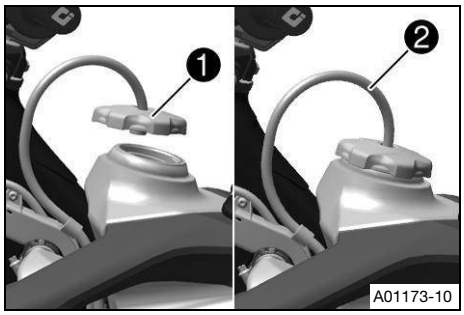

(All FC models)

– Mount fuel tank cap ❶ and turn it clockwise until the fuel tank is tightly closed.

Route hose of fuel tank vent ❷ without kinks.

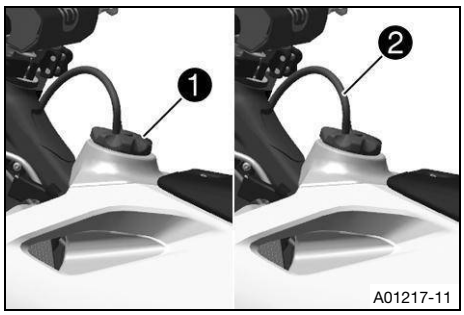

(FX)

– Mount the fuel tank filler cap and turn it clockwise until release button ❶ engages.

Route hose of fuel tank vent ❷ without kinks.

6.12 Cold start button

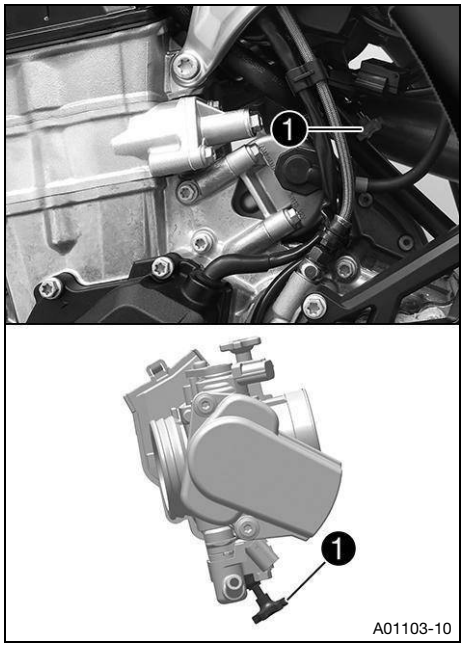

The cold start button ❶ is fitted to the bottom of the throttle valve body.

The electronic fuel injection extends the injection time when the engine is cold and the ambient temperature is low. To help the engine burn the increased amount of fuel, it must be supplied with additional oxygen by pushing the cold start button.

After briefly opening up the throttle and then releasing the throttle twist grip again, or turning the throttle twist grip towards the front, the cold start button returns to its original position.

Note

Check whether the cold start button has returned to its basic position.

Condition	Meaning
The cold start button is pushed in all the way to the stop.	Cold start button activated
The cold start button is in the basic position.	Cold start button deactivated

6.13 Idle speed adjustment screw

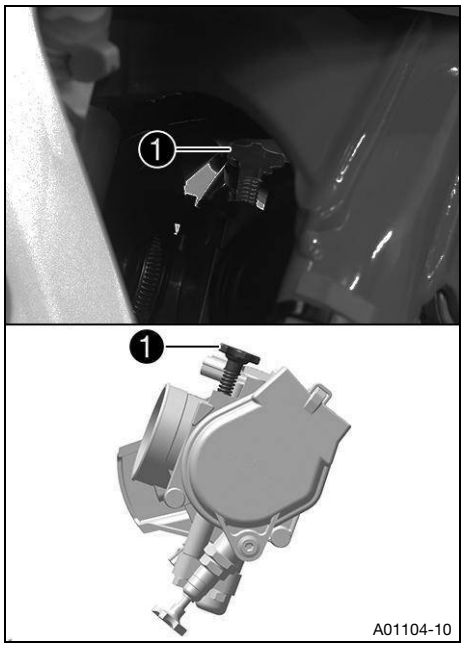

The idle setting of the throttle body substantially influences the vehicle's starting behavior, a stable idle speed, and the vehicle's response when the throttle is opened.

An engine with a correctly set idle speed is easier to start than an engine with the idle speed set incorrectly.

The idle speed is adjusted using idle speed adjusting screw ❶.

Increase the idle speed by turning the idle speed adjustment screw clockwise.

Decrease the idle speed by turning the idle speed adjustment screw counterclockwise.

6.14 Gear shift lever

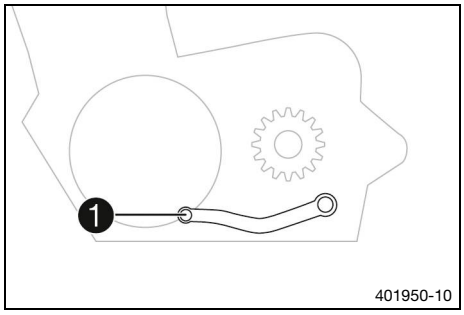

Gear shift lever ❶ is mounted on the left of the engine.

(All FC models)

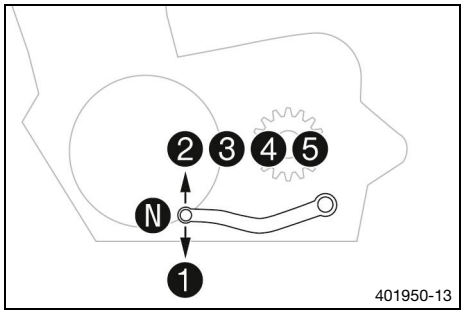

The gear positions can be seen in the figure.
The neutral or idle position is between the first and second gears.

(FX)

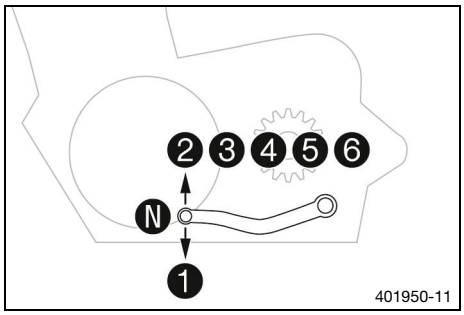

The gear positions can be seen in the figure.
The neutral or idle position is between the first and second gears.

6.15 Brake pedal

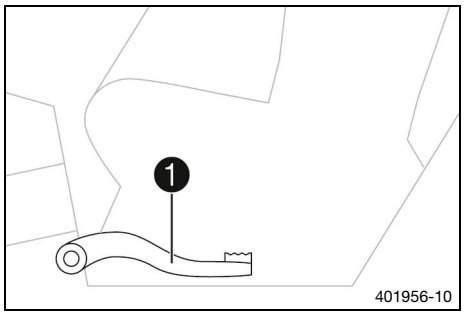

Brake pedal ❶ is located in front of the right footpeg.
The rear brake is operated with the brake pedal.

6.16 Plug-in stand (All FC models)

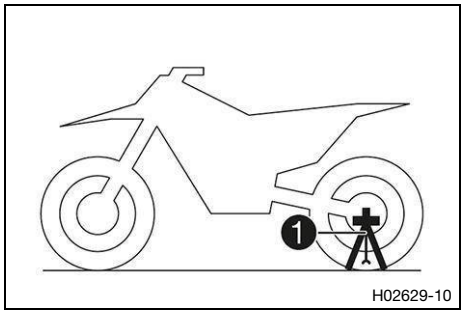

The support for plug-in stand ❶ is the left side of the wheel spindle.

The plug-in stand is used for parking the motorcycle.

The plug-in stand is used as a fork support when transporting the motorcycle.

Note

The plug-in stand must be removed before riding.

The tool can be attached to the plug-in stand.

6.17 Side stand (FX)

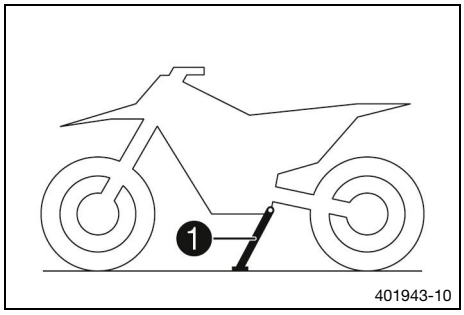

The side stand ❶ is located on the left of the vehicle.

The side stand is used for parking the motorcycle.

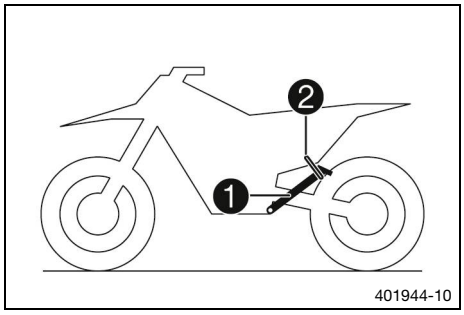

Note

When you are riding, side stand ❶ must be folded up and secured with rubber strap ❷.

7.1 Notes on preparing for first use

DANGER
Danger of accidents A rider who is not fit to ride poses a danger to themself and to others.
– Do not operate the vehicle if you are not fit to ride due to alcohol, drugs, or medication.
– Do not operate the vehicle if you are physically or mentally incapable of doing so.

WARNING
Danger of accidents The vehicle is not designed to carry passengers.
– Do not ride with a passenger.

WARNING
Danger of accidents The brake system fails in the event of overheating.
If the brake pedal is not released, the brake pads grind continuously.
– Take your foot off the brake pedal when you are not braking.

WARNING
Danger of accidents Not adapting the riding style constitutes a major risk.
– Adapt the vehicle speed to the road conditions and your riding ability.

WARNING
Danger of accidents Total weight and axle loads influence the handling characteristic.
– Do not exceed the maximum permissible total weight or the axle loads.

WARNING
Risk of injury People who act without authorization endanger themselves and others.
– Never leave the vehicle unattended while the engine is running.
– Secure the vehicle against unauthorized access.

WARNING
Danger of accidents Different tire profiles on the front and rear wheels can make it more difficult to control the vehicle.
– Make sure that only tires of the same tread type are mounted to the front and rear wheel.

WARNING
Risk of injury Missing or inadequate protective clothing increases the risk of injury.
– Wear appropriate protective clothing such as helmet, boots, gloves as well as pants and a jacket with protectors on all rides.
– Always wear protective clothing that is in good condition and meets the legal regulations.

Note
When using the motorcycle, remember that others may be disturbed by excessive noise.

– Ensure that the pre-delivery inspection has been carried out by an authorized contractual partner.
  ✓ The delivery certificate is transferred upon vehicle handover.
– Read the entire owner's manual before riding for the first time.
– Get to know the controls.
– Adjust the basic position of the clutch lever. (p. 96)
– Adjust the basic position of the hand brake lever. (p. 99)
– Adjust the basic position of the brake pedal. (p. 105)
– Adjust the basic position of the gear shift lever. (p. 134)

– Get used to the handling characteristics of the motorcycle on suitable terrain before undertaking a more challenging ride.

Note
This vehicle is not approved for use on public roads.
When off-road, it is recommended that you be accompanied by another person with another vehicle so that you can help each other.

– Also, ride as slowly as possible and in a standing position to get a better feel for the motorcycle.
– Do not make any off-road trips that exceed your ability and experience.
– Hold the handlebar firmly with both hands and keep your feet on the footpegs when riding.

(All FC models)

– Do not take any luggage.

(FX)

– If luggage is carried, ensure it is fixed firmly as close as possible to the center of the vehicle and ensure even weight distribution between the front and rear wheels.

Note
Motorcycles react sensitively to any changes of weight distribution.

– The maximum permissible total weight and the maximum permissible axle loads must not be exceeded.

Maximum permissible total weight	335 kg (738.5 lb)
Maximum permissible front axle load	145 kg (319.7 lb)
Maximum permissible rear axle load	190 kg (418.9 lb)

– Check the spoke tension. (p. 116)

The spoke tension must be checked after half an hour of operation.

– Run in the engine. (p. 29)

7.2 Running in the engine

– Do not exceed the specified engine speed and load during the running-in time.

Maximum engine speed	
During the first operating hour	7,000 rpm (116.67 Hz)

Maximum engine power	
during the first 3 operating hours	≤ 75 %

Avoid fully opening the throttle.

7.3 Starting performance of lithium-ion batteries at low temperatures

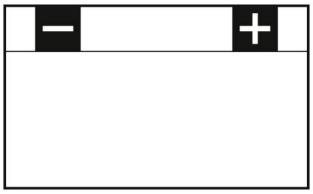

Lithium-ion batteries are far lighter than lead batteries, have a low self-discharge rate, and have more starting power at temperatures over 6 °C (43 °F).

Several attempts to start may be required. Press the start button for 5 seconds, and wait 15 seconds between attempts. At low temperatures, wait for 30 seconds. The pauses are necessary so that the heat created can be distributed through the lithium-ion battery without damaging the lithium-ion battery.

The starting power increases as the battery warms up.

Always make sure the lithium-ion battery is charged to that there is enough power to spare for starting at low temperatures.

After 6 unsuccessful starting attempts, do not try again, and check the vehicle for other malfunctions instead.

7.4 Preparing the vehicle for difficult operating conditions

Note

Use of the vehicle under difficult conditions, such as on sand or on wet and muddy surfaces, can result in significantly increased wear of components, such as the drive train, brake system, or suspension components. For this reason, it may be necessary to inspect or replace parts before the next scheduled service interval.

– Clean the air filter and air filter box. (p. 81)

Check the air filter approx. every 30 minutes.

– Secure the air filter box cover. (p. 81)
– Check the electrical socket connector for humidity and corrosion and to ensure it is firmly seated.
  » If moisture, corrosion, or damage is found:
    – Clean and dry the socket connector, or change it if necessary.

Difficult operating conditions are:

– Riding on dry sand. (p. 30)
– Riding on wet sand. (p. 31)
– Rides on wet and muddy surfaces. (p. 32)
– Riding at high temperatures or slow speed. (p. 32)
– Riding at low temperatures and in snow. (p. 32)

7.5 Preparing the vehicle for rides on dry sand

– Mount the air filter dust protection.

Read the accompanying mounting instructions.

Air filter dust protection cover (A46006920000)

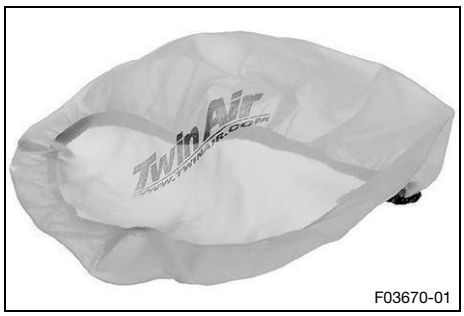

F03670-01

– Mount the air filter sand protection.

Read the accompanying mounting instructions.

Air filter sand protection (A46006922000)

600868-01

– Clean the chain.

Chain cleaner (p. 178)

– Mount the steel sprocket.
– Grease the chain.

Universal oil spray (p. 175)

– Clean the radiator fins.
– Straighten the bent radiator fins carefully.

7.6 Preparing the vehicle for rides on wet sand

F03668-01

– Mount the air filter water protection.

Read the accompanying mounting instructions.

Air filter water protection (A46006921000)

600868-01

– Clean the chain.

Chain cleaner (p. 178)

– Mount the steel sprocket.
– Grease the chain.

Universal oil spray (p. 175)

– Clean the radiator fins.
– Straighten the bent radiator fins carefully.

7.7 Preparing for rides on wet and muddy surfaces

F03668-01

– Mount the air filter water protection.

Read the accompanying mounting instructions.

Air filter water protection (A46006921000)

600868-01

– Mount the steel sprocket.
– Clean the motorcycle. (p. 142)
– Straighten the bent radiator fins carefully.

7.8 Preparing vehicle for rides at high temperature or slow speed

600868-01

– Adjust the secondary transmission to the road conditions.

Note
The engine oil heats up quickly when the clutch is operated frequently due to an excessively high secondary ratio.

– Clean the chain.

Chain cleaner (p. 178)

– Clean the radiator fins.
– Straighten the bent radiator fins carefully.
– Check the coolant level. (p. 125)

7.9 Preparing the vehicle for low temperatures or snow

F03668-01

– Mount the air filter water protection.

Read the accompanying mounting instructions.

Air filter water protection (A46006921000)

8.1 Checks and maintenance measures when preparing for use

Note
Before every trip, check the condition of the vehicle and ensure that it is safe to operate.
The vehicle must be in perfect technical condition when it is being operated.

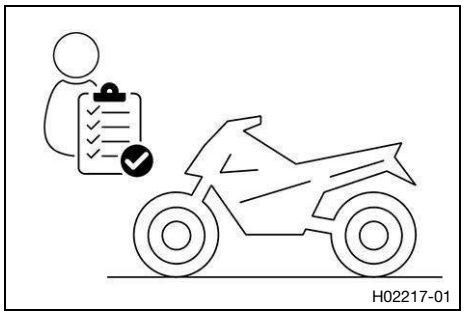

- Check that the electrical equipment is functioning properly.
- Check the engine oil level. (p. 136)
- Check the brake fluid level for the front brake. (p. 100)
- Check the brake fluid level for the rear brake. (p. 106)
- Check that the brake pads of the front brake are secured. (p. 102)
- Check that the brake pads of the rear brake are secured. (p. 108)
- Check the function, condition, and free travel of the brake system.
- Check the coolant level. (p. 125)
- Check the chain for dirt. (p. 89)
- Check the chain, rear sprocket, engine sprocket, and chain guide. (p. 91)
- Check the chain tension. (p. 90)
- Check the tire condition. (p. 114)
- Check the tire pressure. (p. 115)
- Check the spoke tension. (p. 116)

  The spoke tension must be checked regularly as incorrect spoke tension will severely impair riding safety.
- Clean the dust boots of the fork legs. (p. 62)
- Bleed the fork legs. (p. 61)
- Check the air filter and clean if necessary.
- Check the settings of all controls and ensure that they can be operated smoothly.
- Check all screws, nuts, and hose clamps regularly for tightness.
- Check the fuel level.

8.2 Starting the vehicle

DANGER
Danger of poisoning Exhaust gases are toxic and inhaling them may result in unconsciousness and death.
- Always ensure that there is sufficient ventilation when running the engine.
- Use suitable exhaust extraction when starting or running the engine in an enclosed space.

NOTE
Engine failure Running a cold engine at high engine speeds negatively impacts the service life of the engine.
- Always warm up the engine at low engine speeds.

(All FC models)

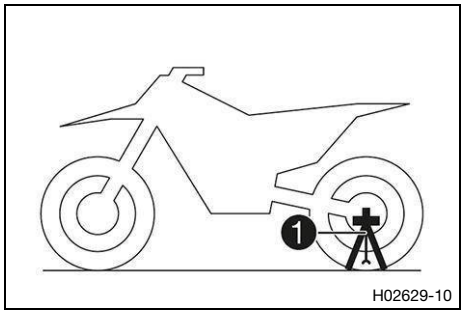

– Remove plug-in stand ❶.

(FX)

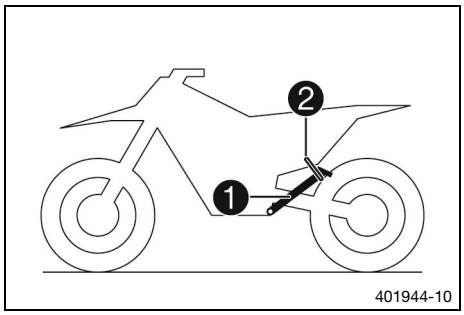

– Take the motorcycle off side stand ❶ and secure the side stand with rubber strap ❷.
– Shift the transmission into the neutral position.

Condition: Ambient temperature: < 20 °C (< 68.0 °F)

– Press the cold start button in all the way to the stop.

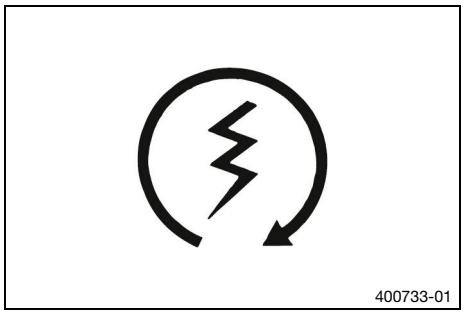

– Press electric starter ⟲.

If the starting attempt is unsuccessful, wait for 15 seconds before making another attempt at starting.
After 6 unsuccessful starting attempts, do not try again, and check the vehicle for other malfunctions instead.

Note

At low temperatures, wait for 30 seconds.

At temperatures below 6 °C (43 °F), several attempts at starting may be necessary to warm-up the lithium-ion battery and thereby increase the starting power.

The malfunction indicator light lights up during the starting process.

8.3 Activating launch control

Note

The launch control helps the rider to generate optimum motorcycle acceleration at the beginning of a race. The maximum speed of the engine with the throttle valve fully opened (full throttle) is reduced. After the start, it is gradually increased up to the maximum engine speed. The clutch must be operated exactly as it would be without launch control activated.

Condition: Motorcycle is stationary, The engine is running at idle speed, Transmission is in the neutral position

– Press and hold the TC button ❶ and the QS button ❷ simultaneously.

✓ The TC indicator lamp and the QS indicator lamp flash when launch control is activated.

Note

The launch control is deactivated automatically for a few seconds after the vehicle has started.

Launch control is also deactivated in the following cases: if the throttle valve is closed more than 1/3 of the way after full throttle, and/or if there is no start within 3 minutes.

For safety reasons, the engine must be switched off for at least 10 seconds before the launch control can be activated again, regardless of whether the vehicle has been started or not.

If the engine has already been running for some time, the engine must first be restarted before the launch control can be activated.

8.4 Activating traction control

Note

The traction control reduces excessive slip on the rear wheel in favor of more control and propulsion, particularly in wet conditions.

When traction control is switched off, the rear wheel may spin more during high acceleration and on surfaces with low grip.

Traction control can be switched on or off during the ride.

The setting most recently selected is activated again when restarting.

– Press the TC button ❶ to switch traction control on or off.

Engine speed	≤ 4,000 rpm (≤ 66.67 Hz)

✓ The TC indicator lamp lights up when traction control is activated.

8.5 Starting off

Note

The plug-in stand must be removed before riding.

– Pull the clutch lever, shift into first gear, release the clutch lever slowly and at the same time carefully open the throttle.

8.6 Quickshifter

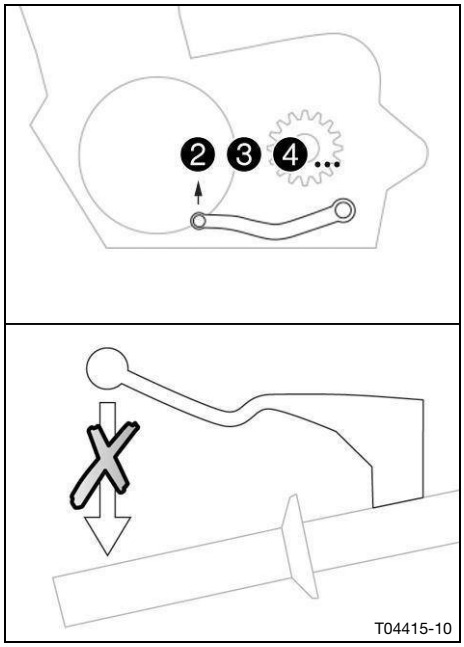

When the **quickshifter** is activated, you can shift up without actuating the clutch.

Note
The quickshifter is not activated when shifting up from first to second gear, and the clutch lever must be used when shifting up instead.
Even if the quickshifter is activated, you need to use the clutch lever to shift down.

Because there is no need to close the throttle grip, uninterrupted gear shifts are possible.
The quickshifter uses the shifter shaft position to check whether or not a shift should be initiated, and sends a corresponding signal to the engine control.
If the quickshifter is deactivated, the clutch needs to be actuated in the normal way for each shift.

8.7 Activate the quickshifter

– Press the QS button ❶ to switch the quickshifter on or off.
  ✓ The QS indicator lamp lights up when the quickshifter is activated.

Note
The quickshifter is not activated when shifting up from first to second gear, and the clutch lever must be used when shifting up instead.
Even if the quickshifter is activated, you need to use the clutch lever to shift down.

8.8 Shifting, riding

WARNING
Danger of accidents If you downshift at high engine speed, the rear wheel blocks and the engine races.
– Do not downshift to a lower gear at high engine speeds.

Note
If you hear unusual noises while riding, stop immediately, switch off the engine, and contact an authorized contractual partner.
First gear is used for starting off or for steep inclines.

– Shift into a higher gear when conditions allow (incline, riding situation, etc.). To do so, release the throttle while simultaneously pulling the clutch lever, shift into the next gear, release the clutch lever and open the throttle.
– If you pushed the cold start button while starting, open the throttle briefly and release the throttle twist grip or turn the throttle twist grip forward.
  ✓ The cold start button goes to the basic position.
– After reaching maximum speed by fully opening the throttle twist grip, turn the throttle back so that it is ¾ open. This will reduce the speed slightly, but the fuel consumption will be considerably lower.
– Only open the throttle as much as the engine can handle. Abruptly opening the throttle increases fuel consumption.
– To shift down, brake and close the throttle at the same time.
– Pull the clutch lever and shift into a lower gear, release the clutch lever slowly, and either open the throttle or shift again.
– Switch off the engine if you are likely to be running at idle speed or stationary for a long time.

≥ 1 min

– Avoid riding the clutch frequently or for too long. This causes the engine oil, engine and cooling system to heat up.
– Ride at a low engine speed instead of at a high engine speed when riding the clutch.

Condition: Quickshifter activated

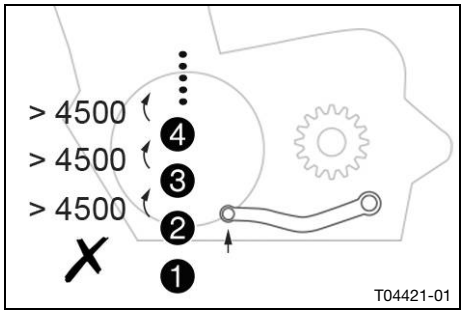

– If the **quickshifter** is activated, you can shift up in the engine speed range shown without pulling the clutch lever.

Note

The quickshifter is not activated when shifting up from first to second gear, and the clutch lever must be used when shifting up instead.

The minimum engine speed before shifting up in revolutions per minute is shown in the figure.

Pull the shift lever to the stop quickly without changing the throttle twist grip position.

Even if the quickshifter is activated, you need to use the clutch lever to shift down.

If the shifting performance of the Quickshifter starts to decrease, it must be reprogrammed.

8.9 Braking

WARNING

Danger of accidents A spongy pressure point on the front or rear brake reduces the brake action.

– Do not drive the vehicle if the brake system has a spongy pressure point.

WARNING
Danger of accidents Braking with excessive force locks the wheels.
– Adapt your braking to the riding situation and the road conditions.

WARNING
Danger of accidents Moisture and dirt impair the brake system.
– Brake carefully several times to dry out and remove dirt from the brake pads and the brake discs.

– On sandy, wet, or slippery surfaces, use mostly the rear brake.
– Always finish braking before you go into a bend. Shift into a lower gear that suits the speed.
– Use the brake action of the engine on long downhill stretches. Shift down one or two gears, but do not overrev the engine when doing so. This means that significantly less braking is required and means the brake system does not overheat.

8.10 Stop, park

WARNING
Danger of burns Some vehicle components become hot when the vehicle is operated.
– Do not touch any parts such as the exhaust system, radiator, engine, damper, or brake system before the vehicle parts have cooled down.
– Allow the vehicle parts to cool down before performing any work on the vehicle.

WARNING
Risk of injury People who act without authorization endanger themselves and others.
– Never leave the vehicle unattended while the engine is running.
– Secure the vehicle against unauthorized access.

NOTE
Fire hazard Hot vehicle components pose a fire hazard and explosion risk.
– Do not park the vehicle near materials which are highly flammable or explosive.
– Allow the vehicle to cool down before covering it.

NOTE
Material damage The vehicle may be damaged if parked incorrectly.
Damage can occur if the vehicle rolls away or falls over.
The components for parking the vehicle are designed only for the weight of the vehicle.
– Park the vehicle on a firm and level surface.
– Make sure that nobody sits on the vehicle when it is parked on a stand.

– Brake the motorcycle.
– Shift the transmission into neutral
– Press kill button when the engine is at idle speed until the engine stops.
– Park the motorcycle on firm ground.

8.11 Transportation

NOTE

Fire hazard Hot vehicle components pose a fire hazard and explosion risk.

– Do not park the vehicle near materials which are highly flammable or explosive.
– Allow the vehicle to cool down before covering it.

NOTE

Material damage The vehicle may be damaged if parked incorrectly.

Damage can occur if the vehicle rolls away or falls over.

The components for parking the vehicle are designed only for the weight of the vehicle.

– Park the vehicle on a firm and level surface.
– Make sure that nobody sits on the vehicle when it is parked on a stand.

(All FC models)

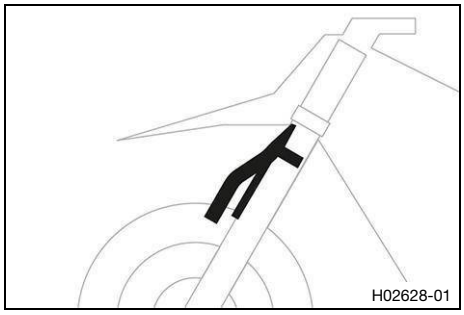

– Switch off the engine.
– Mount the plug-in stand on the fork legs.

Make sure the brake line runs in front of the plug-in stand and does not become wedged.

Plug-in stand (A46029094000)

Note

The plug-in stand is included in the scope of supply.

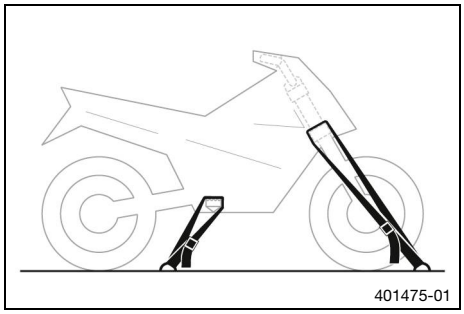

– Use tension belts or other suitable devices to secure the motorcycle against falling over or rolling away.

Only tighten the tension belts to the point that the plug-in stand is firmly in contact with the fender and the tires.
Make sure that the plug-in stand is aligned with the underside of the fender.

(FX)

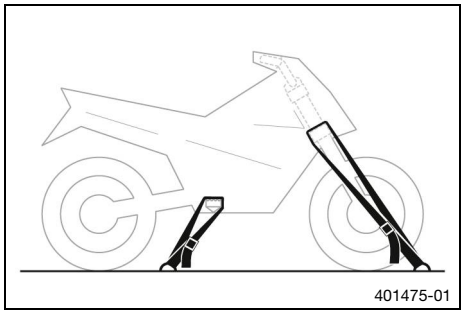

– Switch off the engine.
– Use tension belts or other suitable devices to secure the motorcycle against falling over or rolling away.

8.12 Refueling

DANGER

Fire hazard Fuel is highly flammable.

The fuel in the fuel tank expands when warm and can escape if overfilled.

- Do not refuel the vehicle in the vicinity of open flames, glowing, or smoldering objects.
- Make sure that nobody smokes in the vicinity of the vehicle during the refueling process.
- Switch off the engine for refueling.
- Make sure that no fuel is spilled; particularly not on hot parts of the vehicle.
- If any fuel is spilled, wipe it up immediately.
- Do not overfill the fuel tank.

WARNING

Danger of poisoning Fuel is harmful to health.

- Do not allow fuel to come into contact with skin, eyes, or clothing.
- Consult a doctor immediately if fuel has been ingested.
- Do not inhale fuel vapors.
- Rinse the affected area immediately with plenty of water in the event of contact with skin.
- Rinse eyes thoroughly with water and consult a doctor immediately if fuel comes into contact with eyes.
- If fuel spills on to your clothing, change the clothing.
- Store fuel properly in a suitable container and keep out of the reach of children.

NOTE

Material damage Inadequate fuel quality can lead to losses in performance and consequential damage.

- Refuel only with clean fuel that meets the specified standards.

NOTE

Environmental hazard Improper handling of fuel is dangerous to the environment.

- Do not allow fuel to enter the groundwater, the soil, or the sewage system.

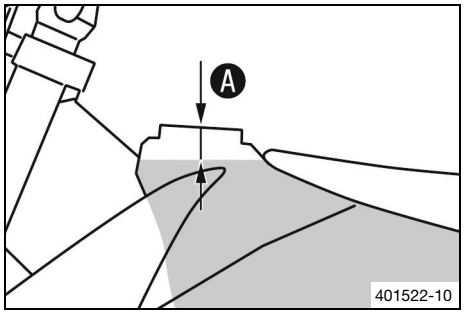

- Switch off the engine.
- Open the fuel tank cap. (p. 23)
- Fill the fuel tank with fuel no higher than A.

Level A	35 mm (1.38 in)

Total fuel tank capacity, approx.	
Super unleaded (ROZ 95) (p. 174)	**(All FC models)** 7.2 l (1.90 liq. gal_{US})
	(FX) 8.5 l (2.25 liq. gal_{US})

- Close the fuel tank cap. (p. 24)

9.1 Service schedule

Any further work that results from the service work must be ordered separately and invoiced separately.

Different service intervals may apply in your country, depending on the local operating conditions.

If the vehicle is used in particularly harsh conditions such as heavy rain, mud, sand, snow, extreme temperatures, frequent full load etc., shorter service intervals than those in the table may be necessary.

Individual service intervals and scopes may change in the course of technical developments. The most up-to-date service schedule is available for authorized contractual partners for the electronic proof of service. Your authorized contractual partner will be happy to advise you.

	After one operating hour	Every 15 operating hours	Every 45 operating hours	Every 90 operating hours	Every 24 months
Read out the fault memory using the diagnostics tool.	○	●	●	●	●
Program the gear position sensor.		●	●	●	
Check that the electrical equipment is functioning properly.	○	●	●	●	
Check and charge the 12 V battery.	○	●	●	●	●
Check that the brake pads of the front brake are secured. (p. 102)	○	●	●	●	●
Check that the brake pads of the rear brake are secured. (p. 108)	○	●	●	●	●
Check the brake discs. (p. 99)	○	●	●	●	●
Check the brake lines for damage and tightness.	○	●	●	●	●
Check the brake fluid level for the front brake. (p. 100)	○	●	●		
Change the brake fluid for the front brake.				●	●
Check the brake fluid level for the rear brake. (p. 106)	○	●	●		
Change the brake fluid for the rear brake.				●	●
Check/correct the fluid level of the hydraulic clutch. (p. 96)			●		
Change the hydraulic clutch fluid. (p. 97)				●	●
Check the free travel on the hand brake lever. (p. 99)	○	●	●	●	●
Check the free travel of the brake pedal. (p. 105)	○	●	●	●	●
Check the idle speed.	○	●	●	●	●
Change the engine oil and the oil filter, clean the oil screens. (p. 137)	○	●	●	●	●
Check all hoses (e.g. fuel, cooling, bleeder, drainage, etc.) and boots for cracking, leaks, and correct routing.	○	●	●	●	●
Check the cables for damage and that there are no kinks in the routing.		●	●	●	●
Check that the clutch cables are undamaged, routed without kinks, and set correctly.		●	●	●	●
Check the frame. (p. 94)		●	●	●	
Check the swingarm. (p. 94)		●	●	●	
Check the swingarm bearing for play.			●	●	
Check the heim joint on the shock absorber for play.			●	●	
Check the shock absorber linkage.		●	●	●	
Check the tire condition. (p. 114)		●	●	●	●

	After one operating hour		Every 15 operating hours	Every 45 operating hours	Every 90 operating hours	Every 24 months
Check the tire pressure. (p. 115)		●	●	●	●	●
Check the wheel bearing for play.		●	●	●		
Check the hubs.		●	●	●		
Check the rim run-out.	○	●	●	●		
Check the spoke tension. (p. 116)	○	●	●	●		
Check the chain, rear sprocket, engine sprocket, and chain guide. (p. 91)	○	●	●	●		
Check the chain tension. (p. 90)	○	●	●	●	●	●
Grease all moving parts (e.g., hand lever, chain, etc.) and check for smooth operation.	○	●	●	●	●	●
Change the spark plug and spark plug connector.			●	●		
Check the valve clearance.	○		●	●		
Change the fuel filter.				●	●	●
Check the clutch.		●	●	●		
Clean the air filter and air filter box. (p. 81)		●	●	●	●	●
Change the damping material on the main silencer. (p. 84)			●	●		
Carry out fork service.			●	●		
Service the shock absorber.			●	●		
Check all screws, nuts, and hose clamps for a tight fit.	○	●	●	●	●	●
Change the fuel screen. (p. 135)	○	●	●	●	●	●
Check the fuel pressure.	○		●	●	●	●
Check the frost protection and coolant level. (p. 124)			●	●		
Check the coolant level. (p. 125)	○	●				
Change the coolant. (p. 127)						●
Check the steering head bearing play. (p. 70)	○	●				
Lubricate the steering head bearing. (p. 71)			●	●	●	
Perform minor engine service including removing and installing the engine. (Change the piston, check/measure the cylinder. Check the cylinder head. Check the camshaft and valve train components. Check the timing assembly. Change the radial shaft seal rings of the water pump. Change the crankshaft seal ring. Change the intake flange. Change inlet sleeve.)			●	●		
Perform major engine service, engine is removed. (Change valves, valve springs, valve spring seats, and valve spring retainer. Change the connecting rod, conrod bearing and crank pin. Check the transmission and shift mechanism. Check the oil pressure control valve. Change the suction pump. Check the force pump and lubrication system. Change the timing chain. Change all engine bearings and all gaskets. Change the freewheel.)				●		
Final check: check vehicle for operating safety.	○	●	●	●	●	●
Take a test ride.	○	●	●	●	●	●
Read out the fault memory after the test ride using the diagnostics tool.	○	●	●	●	●	●

					Every 24 months
				Every 90 operating hours	
			Every 45 operating hours		
		Every 15 operating hours			
	After one operating hour				
Enter the electronic proof of service in the contractual partner portal.	○	●	●	●	●

○ One-time interval

● Periodic interval

10.1 Checking the basic chassis setting with the rider's weight

Note
When adjusting the basic chassis setting, first adjust the shock absorber and then the fork.

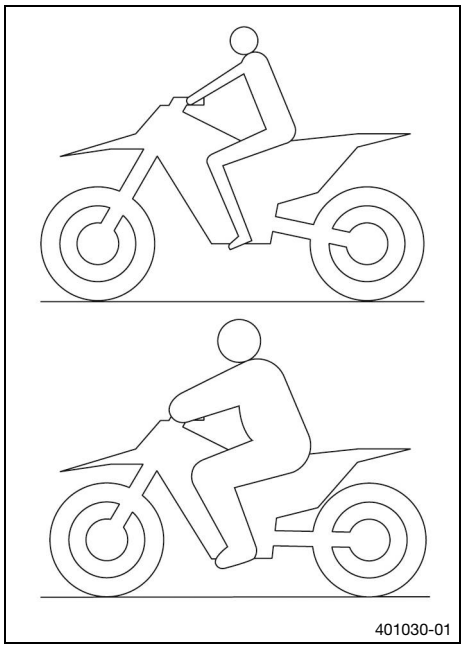

- For optimal motorcycle riding characteristics and to avoid damage to forks, shock absorbers, swingarm, and frame, the basic settings of the suspension components must match the rider's weight.
- In the delivered condition, Husqvarna motorcycles are adjusted for an average rider's weight (with full protective clothing).

Standard rider weight	75 kg … 85 kg (165.3 lb … 187.4 lb)

- If the rider's weight is above or below this range, the basic setting of the suspension components must be adjusted accordingly.
- Small weight differences can be compensated by adjusting the spring pretension of the shock absorber, but in the case of large weight differences, the springs must be replaced.

10.2 Air suspension XACT (All FC models)

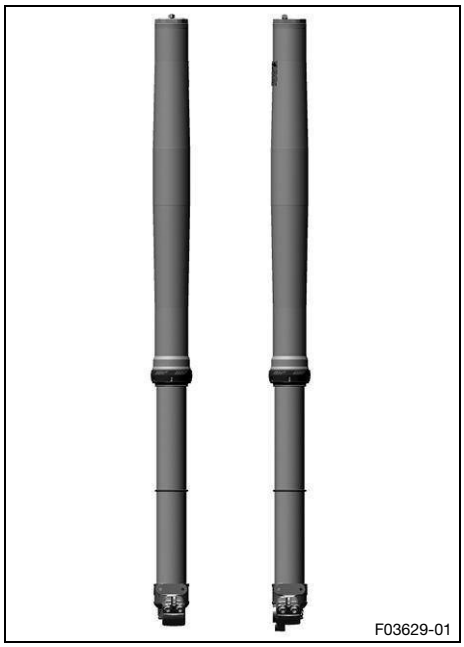

Air suspension **WP XACT** is used in the fork.

In this system, the suspension is located in the left fork leg and damping in the right fork leg.

As fork springs are no longer required, a significant weight advantage is achieved when compared to conventional forks. The response on slightly uneven surfaces is significantly improved.

In normal driving mode, suspension is provided exclusively by an air cushion. A steel spring is located in the left fork leg as an end stop.

Note
If the fork frequently bottoms out, then the fork air pressure must be increased to avoid damage to the fork and frame.

The air pressure in the fork can be quickly adjusted to the rider's weight, surface conditions, and the rider's preference using a fork air pump. The fork does not have to be dismantled. The time-consuming mounting of harder or softer fork springs is not required.

If the air chamber loses air due to a damaged seal, the fork will still not sag. In this case the air is retained in the fork. The suspension travel is maintained as far as possible. The damping becomes harder, and the riding comfort is reduced.

As with a conventional fork, the damping can be adjusted in rebound and compression stages.

The rebound adjustment is located at the lower end of the right fork leg.

The compression adjustment is located at the upper end of the right fork leg.

10.3 Compression damping of the shock absorber

The compression damping of the shock absorber is divided into two ranges: high-speed and low-speed.

High-speed and low-speed refer to the compression speed of the rear wheel suspension and not to the vehicle speed.

The high-speed compression has an effect, for example, when landing after a jump: the rear wheel suspension compresses quickly.

The low-speed compression has an effect, for example, when riding over long bumps: the rear wheel suspension compresses slowly.

These two ranges can be adjusted separately, although the transition between high-speed and low-speed is floating. As a result, changes in the high-speed range affect the compression damping in the low-speed range and vice versa.

10.4 Adjusting the low-speed compression damping of the shock absorber

CAUTION

Risk of injury Parts of the shock absorber will move erratically if the shock absorber is detached incorrectly.

The shock absorber is filled with highly compressed nitrogen.

– Please follow the description provided.

Note

The effect of the low-speed compression adjustment can be seen in slow to normal compression of the shock absorber.

Preparatory work

– Remove the seat. (p. 76)

– Remove the right side fairing. (p. 82)

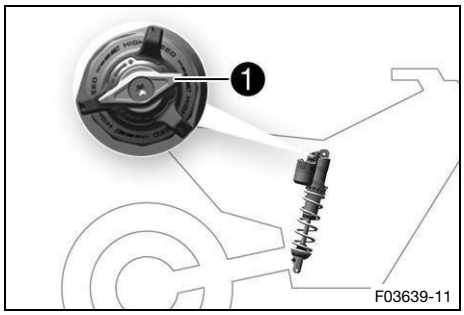

Main work

– Turn adjuster ❶ clockwise up to the last perceptible click.
– Turn counterclockwise by the number of clicks corresponding to the shock absorber type.

Low-speed compression damping **(FC 450)**	
Comfort	17 clicks
Standard	15 clicks
Sport	13 clicks

Low-speed compression damping **(FC 450 US)**	
Comfort	17 clicks
Standard	15 clicks
Sport	13 clicks

Low-speed compression damping **(FX)**	
Comfort	17 clicks
Standard	15 clicks
Sport	13 clicks

Note
Turning clockwise increases damping; turning anti-clockwise reduces damping.

Reworking

– Install the right side cover. (p. 83)
– Mount the seat. (p. 77)

10.5 Adjusting the high-speed compression damping of the shock absorber

CAUTION
Risk of injury Parts of the shock absorber will move erratically if the shock absorber is detached incorrectly.
The shock absorber is filled with highly compressed nitrogen.
– Please follow the description provided.

Note
The effect of the high-speed compression adjustment can be seen in the fast compression of the shock absorber.

Preparatory work

– Remove the seat. (p. 76)
– Remove the right side fairing. (p. 82)

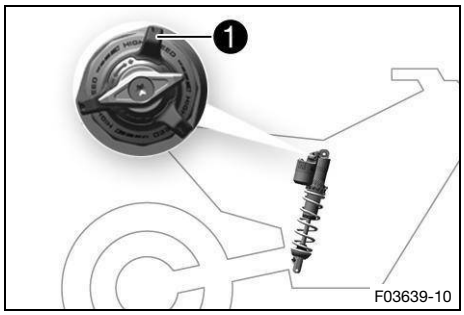

Main work

– Turn adjuster ❶ clockwise all the way to the stop.
– Turn counterclockwise by the number of turns corresponding to the shock absorber type.

High-speed compression damping **(FC 450)**	
Comfort	2 turns (720°)
Standard	1.5 turns (540°)
Sport	1 turn (360°)

High-speed compression damping **(FC 450 US)**	
Comfort	2 turns (720°)
Standard	1.5 turns (540°)
Sport	1 turn (360°)

High-speed compression damping **(FX)**	
Comfort	2 turns (720°)
Standard	1.5 turns (540°)
Sport	1 turn (360°)

Note
Turning clockwise increases damping; turning anti-clockwise reduces damping.

Reworking

– Install the right side cover. (p. 83)
– Mount the seat. (p. 77)

10.6 Adjusting the rebound damping of the shock absorber

CAUTION
Risk of injury Parts of the shock absorber will move erratically if the shock absorber is detached incorrectly.
The shock absorber is filled with highly compressed nitrogen.
– Please follow the description provided.

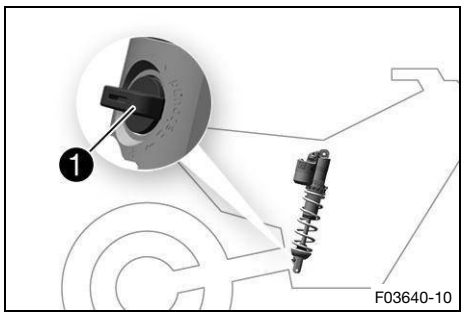

– Turn adjuster ❶ clockwise up to the last perceptible click.
– Turn counterclockwise by the number of clicks corresponding to the shock absorber type.

Rebound damping (FC 450)	
Comfort	17 clicks
Standard	15 clicks
Sport	13 clicks

Rebound damping (FC 450 US)	
Comfort	17 clicks
Standard	15 clicks
Sport	13 clicks

Rebound damping (FX)	
Comfort	17 clicks
Standard	15 clicks
Sport	13 clicks

Note
Turning clockwise increases damping; turning anti-clockwise reduces damping on rebound.

10.7 Measuring the dimension of the unloaded rear wheel

Preparatory work

– Raise the motorcycle with a lift stand. (p. 60)

Main work

– Position the sag scale in the rear axle and measure the distance to marking **SAG** on the rear fender.

Sag scale (00029090200)

– Note the value as dimension Ⓐ.

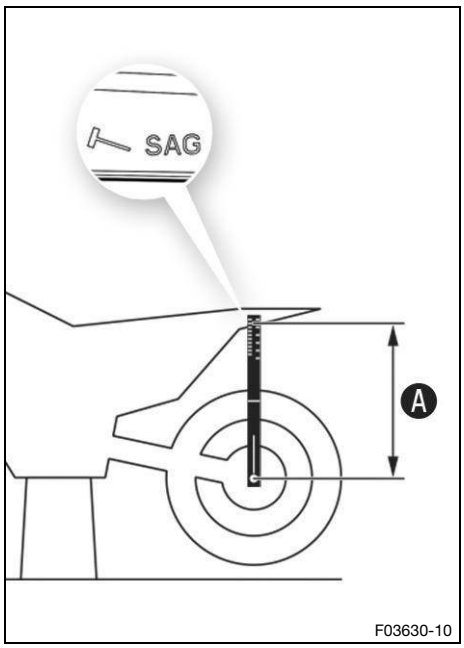

Reworking

– Remove the motorcycle from the lift stand. (p. 60)

10.8 Checking the static sag of the shock absorber

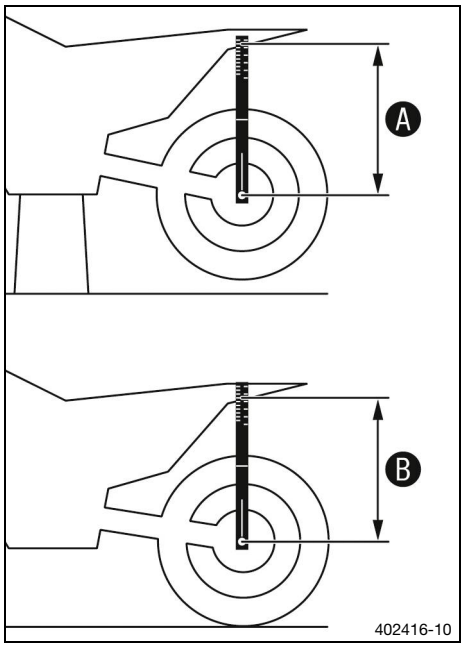

– Determine rear wheel dimension A. (p. 48)
– Hold the motorcycle upright with aid of an assistant.
– Measure the distance again between the rear axle and marking **SAG** on the rear fender using the sag gage.
– Note the value as dimension B.

Note
The static sag is the difference between measurements A and B.

– Check the static sag.

Static sag **(FC 450)**	35 mm (1.38 in)
Static sag **(FC 450 US)**	35 mm (1.38 in)
Static sag **(FX)**	35 mm (1.38 in)

» If the static sag is more or less than the specified value:
  – Adjust the preload for the shock absorber. (p. 50)

10.9 Checking the rider sag of the shock absorber

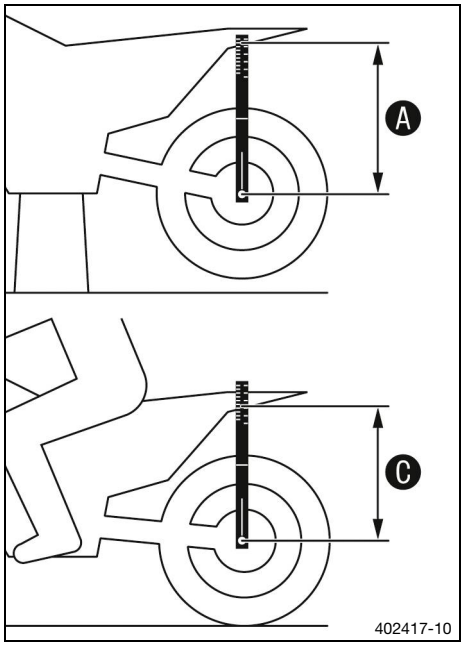

– Determine rear wheel dimension A. (p. 48)
– With another person holding the motorcycle, sit on the saddle with full protective clothing in a normal sitting position (feet on footrests) and bounce up and down a few times.
  ✓ The rear wheel suspension levels out.
– With the help of another person, remeasure the distance between the rear axle and marking **SAG** on the rear fender using the sag scale.
– Note the value as dimension C.

Note
The rider sag is the difference between measurements A and C.

– Check the rider sag.

Rider sag **(FC 450)**	105 mm (4.13 in)
Rider sag **(FC 450 US)**	105 mm (4.13 in)
Rider sag **(FX)**	105 mm (4.13 in)

» If the rider sag differs from the specified measurement:
  – Adjust the rider sag. (p. 52)

10.10 Adjusting the preload for the shock absorber

CAUTION
Risk of injury Parts of the shock absorber will move erratically if the shock absorber is detached incorrectly.
The shock absorber is filled with highly compressed nitrogen.
– Please follow the description provided.

Note
Note the current adjustment before changing the spring preload - e.g. measure the spring length.

Preparatory work
– Raise the motorcycle with a lift stand. (p. 60)
– Remove the frame protector. (p. 63)
– Remove the seat. (p. 76)
– Remove the right side fairing. (p. 82)
– Remove the muffler. (p. 83)
– Remove the shock absorber. (p. 73)
– After removing the shock absorber, clean it thoroughly.

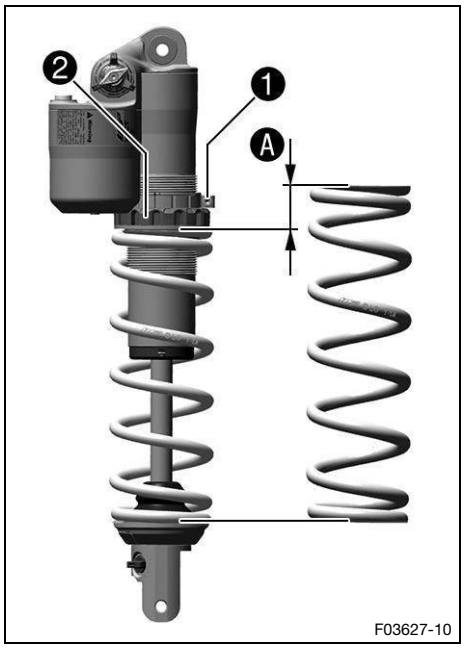

Main work

- Loosen screw ❶.
- Turn adjusting ring ❷ until the spring is no longer under tension.

Hook wrench (90129051000)

Note
If the spring cannot be fully released, the spring must be removed to accurately measure the spring length.

- Measure the total spring length while the spring is not under tension.
- Tension the spring by turning adjusting ring ❷ to specified dimension Ⓐ.

Preload **(FC 450)**	8 mm (0.31 in)
Preload **(FC 450 US)**	8 mm (0.31 in)
Preload **(FX)**	8 mm (0.31 in)

Note
Depending on the static sag and/or the rider sag, it may be necessary to increase or decrease the spring preload.

- Tighten screw ❶.

Screw, shock absorber adjusting ring	
M5	5 Nm (3.7 ft·lb$_f$)

Make sure that the adjusting ring does not touch any other components when installed.

Reworking

- Install the shock absorber. (p. 75)
- Install the muffler. (p. 84)
- Install the right side cover. (p. 83)
- Mount the seat. (p. 77)
- Install the frame protector. (p. 63)
- Check the free travel of the brake pedal. (p. 105)
- Remove the motorcycle from the lift stand. (p. 60)

10.11 Adjusting the rider sag

Preparatory work

- Raise the motorcycle with a lift stand. (p. 60)
- Remove the frame protector. (p. 63)
- Remove the seat. (p. 76)
- Remove the right side fairing. (p. 82)
- Remove the muffler. (p. 83)
- Remove the shock absorber. (p. 73)
- After removing the shock absorber, clean it thoroughly.

Main work

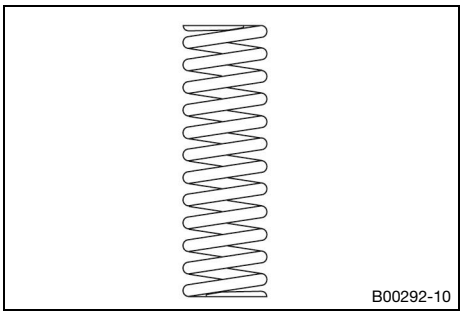

- Select and mount a suitable spring.

Spring rate **(FC 450)**	
Weight of rider: 65 kg … 75 kg (143.3 lb … 165.3 lb)	42 N/mm (239.8 lb_f/in)
Weight of rider: 75 kg … 85 kg (165.3 lb … 187.4 lb)	45 N/mm (257.0 lb_f/in)
Weight of rider: 85 kg … 95 kg (187.4 lb … 209.4 lb)	48 N/mm (274.1 lb_f/in)

Spring rate **(FC 450 US)**	
Weight of rider: 65 kg … 75 kg (143.3 lb … 165.3 lb)	42 N/mm (239.8 lb_f/in)
Weight of rider: 75 kg … 85 kg (165.3 lb … 187.4 lb)	45 N/mm (257.0 lb_f/in)
Weight of rider: 85 kg … 95 kg (187.4 lb … 209.4 lb)	48 N/mm (274.1 lb_f/in)

Spring rate **(FX)**	
Weight of rider: 65 kg … 75 kg (143.3 lb … 165.3 lb)	42 N/mm (239.8 lb_f/in)
Weight of rider: 75 kg … 85 kg (165.3 lb … 187.4 lb)	45 N/mm (257.0 lb_f/in)
Weight of rider: 85 kg … 95 kg (187.4 lb … 209.4 lb)	48 N/mm (274.1 lb_f/in)

Note
The spring rate is shown on the outside of the spring.

Reworking

- Install the shock absorber. (p. 75)
- Install the muffler. (p. 84)
- Install the right side cover. (p. 83)
- Mount the seat. (p. 77)
- Install the frame protector. (p. 63)
- Check the free travel of the brake pedal. (p. 105)
- Remove the motorcycle from the lift stand. (p. 60)
- Check the static sag of the shock absorber. (p. 49)

– Check the rider sag of the shock absorber. (p. 49)
– Adjust the rebound damping of the shock absorber. (p. 47)

10.12 Checking the basic setting of the fork

Note
For various reasons, no exact rider sag can be determined for the fork.

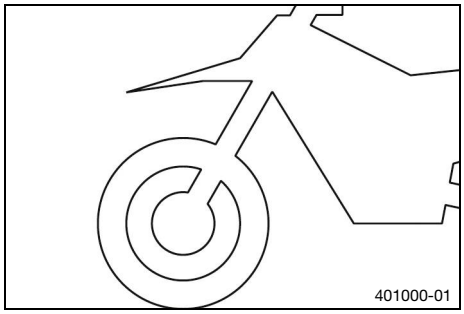

– Smaller differences in the rider's weight can be compensated for by the fork air pressure.
– However, if the fork frequently bottoms out (hard end stop on compression), the fork air pressure must be increased, within the specified values, to avoid damage to the fork and frame.
– If the fork feels unusually hard after extended periods of operation, the fork legs need to be bled.

10.13 Adjusting the fork air pressure (All FC models)

WARNING
Danger of accidents Modifications to the suspension settings that are not properly coordinated can impair the handling and overload components.
– Only make adjustments within the recommended range.
– Ride slowly to start with after making adjustments to get the feel of the new handling characteristics.

Note
Check or adjust the air pressure under the same conditions at the earliest 5 minutes after switching off the engine.
The air suspension is located in the left fork leg. The pressure and rebound damping is located in the right fork leg.

Preparatory work
– Raise the motorcycle with a lift stand. (p. 60)

Main work

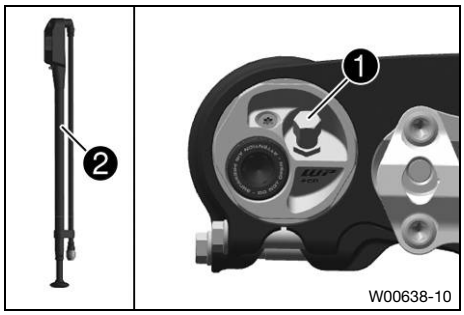

– Remove protection cap ❶.
– Push together fork airpump ❷ fully.

Fork air pump (79412966100)

Note
The fork air pump is included as part of the motorcycle's accessory pack.

– Connect the fork air pump to the left fork leg.

Read the accompanying instructions.

✓ The fork air pump indicator switches on automatically.
✓ A little air escapes from the fork leg when connecting.

Note
This is due to the volume of the hose and is not due to a defect in the fork air pump or the fork.

– Adjust the air pressure as specified.

Do not set the air pressure outside the specified range.

Air pressure **(FC 450)**	
Weight of rider: 65 kg … 75 kg (143.3 lb … 165.3 lb)	10.2 bar (147.9 psi)
Weight of rider: 75 kg … 85 kg (165.3 lb … 187.4 lb)	10.4 bar (150.8 psi)
Weight of rider: 85 kg … 95 kg (187.4 lb … 209.4 lb)	10.6 bar (153.7 psi)

Air pressure **(FC 450 US)**	
Weight of rider: 65 kg … 75 kg (143.3 lb … 165.3 lb)	10.3 bar (149.4 psi)
Weight of rider: 75 kg … 85 kg (165.3 lb … 187.4 lb)	10.5 bar (152.3 psi)
Weight of rider: 85 kg … 95 kg (187.4 lb … 209.4 lb)	10.7 bar (155.2 psi)

Gradual change of the air pressure in steps by	0.2 bar (2.9 psi)
Minimum air pressure	7 bar (102 psi)
Maximum air pressure	12 bar (174 psi)

– Disconnect the fork air pump from the left fork leg.
  ✓ When disconnecting, excess pressure will escape from the hose – the fork leg itself does not lose any air.
  ✓ The fork air pump display switches off automatically after 80 seconds.
– Mount the protection cap.

Only mount the protection cap by hand.

Reworking

– Remove the motorcycle from the lift stand. (p. 60)

10.14 Adjusting the compression damping of the fork

Note
The hydraulic compression damping determines the fork suspension behavior.

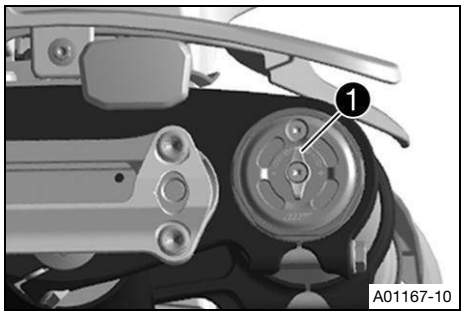

(All FC models)

– Turn adjuster ❶ clockwise all the way to the stop.

Note
Adjuster ❶ is located at the upper end of the right fork leg.

– Turn counterclockwise by the number of clicks corresponding to the fork type.

Compression damping (FC 450)	
Comfort	17 clicks
Standard	12 clicks
Sport	7 clicks

Compression damping (FC 450 US)	
Comfort	17 clicks
Standard	12 clicks
Sport	7 clicks

Note
Turning clockwise increases damping; turning counterclockwise reduces damping during compression.

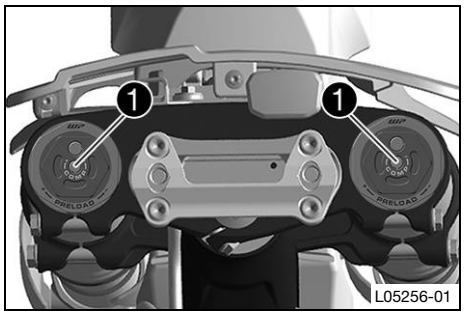

(FX)

– Turn adjusters ❶ clockwise all the way to the stop.

Note
Adjusters ❶ are located at the top end of the fork legs.

– Turn counterclockwise by the number of clicks corresponding to the fork type.

Compression damping	
Comfort	17 clicks
Standard	12 clicks
Sport	7 clicks

Note
Turning clockwise increases damping; turning counterclockwise reduces damping during compression.

10.15 Adjusting the rebound damping of the fork

Note
The hydraulic rebound damping determines the fork suspension behavior.

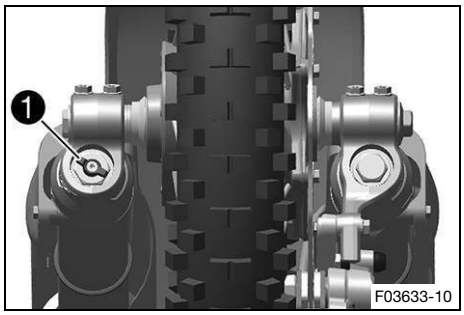

(All FC models)

– Turn adjuster ❶ clockwise all the way to the stop.

Note
Adjuster ❶ is located at the lower end of the right fork leg.

– Turn counterclockwise by the number of clicks corresponding to the fork type.

Rebound damping (FC 450)	
Comfort	17 clicks
Standard	12 clicks
Sport	7 clicks

Rebound damping (FC 450 US)	
Comfort	23 clicks
Standard	18 clicks
Sport	13 clicks

Note
Turning clockwise increases damping; turning anticlockwise reduces damping on rebound.

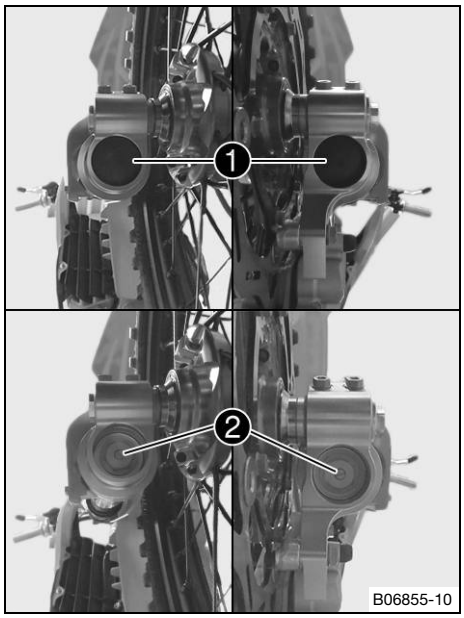

(FX)

– Take off protection caps ❶.
– Turn adjusters ❷ clockwise all the way to the stop.

Note
Adjusters ❷ are located at the bottom end of the fork legs.

– Turn counterclockwise by the number of clicks corresponding to the fork type.

Rebound damping	
Comfort	23 clicks
Standard	18 clicks
Sport	13 clicks

Note
Turning clockwise increases damping; turning anticlockwise reduces damping on rebound.

– Fit protection caps ❶.

10.16 Handlebar position

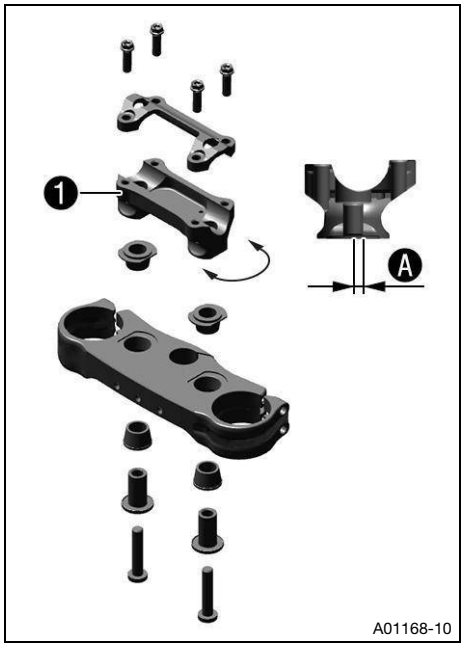

The holes on handlebar mount 1 are placed at a distance of A from the center.

Hole distance A	3.5 mm (0.138 in)

The handlebar can be mounted in 2 different positions. This allows the handlebar to be mounted in the most comfortable position for the rider.

Note
In addition, the handlebar can be mounted rigidly or on a rubber support.

10.17 Adjusting the handlebar position

WARNING
Danger of accidents A repaired handlebar poses a safety risk.
If the handlebar is bent or straightened, the material becomes fatigued. The handlebar may break as a result.
– Change the handlebar if the handlebar is damaged or bent.

Note
The handlebar can be mounted rigidly or on a rubber bearing.

Preparatory work
– Remove the handlebar pad.

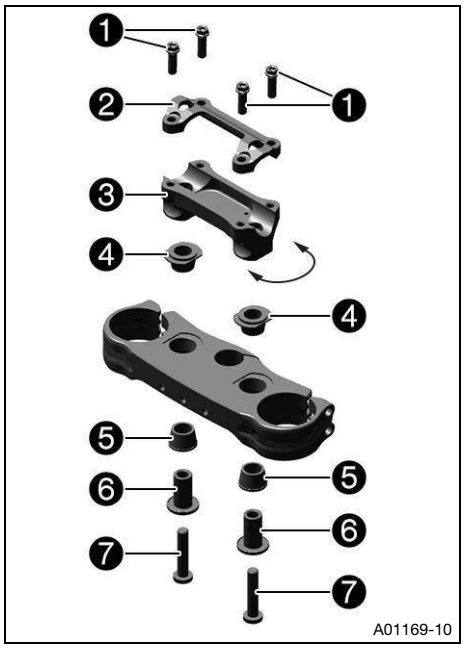

Main work

– Remove screws ❶.
– Take off handlebar clamp ❷.
– Remove the handlebar and lay it to one side.

Protect the components against damage by covering them.
Do not kink the cables or lines.

– Remove screws ❼ and bushings ❻.
– Take off handlebar support ❸.

Adjusting the handlebar position with handlebar clamp with rubber bushings

– Position the rubber bushings ❹ and ❺.
– Place the handlebar mount in the required position.

Note
The handlebar mount is longer and higher on one side.

– Mount and tighten the screws ❼ with the bushings ❻.

Screw, handlebar mount	
M10	40 Nm (29.5 ft·lb$_f$) **Loctite® 243**

– Position the handlebar.

Make sure the cables and wiring are positioned correctly.

– Position handlebar clamp ❷.
– Mount screws ❶, but do not tighten yet.

Handlebar clamp screw	
M8	20 Nm (14.8 ft·lb$_f$)

– Tighten screws ❶ evenly.

First bolt the handlebar clamp with screws ❶ onto the longer, higher side of the handlebar support so that both parts touch.

Handlebar clamp screw	
M8	20 Nm (14.8 ft·lb$_f$)

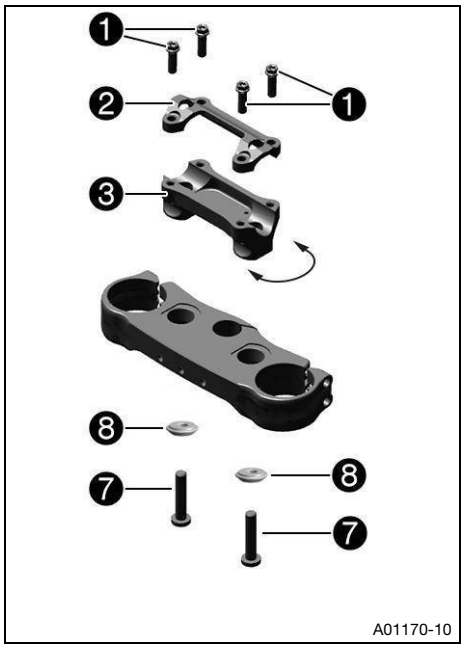

Adjusting the handlebar position with the rigid handlebar clamp

– Place the handlebar mount in the required position.

> **Note**
> The handlebar mount is longer and higher on one side.

– Mount and tighten the screws ❼ with the bushings ❽.

Screw, handlebar mount	
M10	40 Nm (29.5 ft·lb$_f$) **Loctite® 243**

Rigid handlebar clamp bushing (A46001038010)

✓ The conical side of the bushing faces downward.

– Position the handlebar.

Make sure the cables and wiring are positioned correctly.

– Position handlebar clamp ❷.

– Mount screws ❶, but do not tighten yet.

Handlebar clamp screw	
M8	20 Nm (14.8 ft·lb$_f$)

– Tighten screws ❶ evenly.

First bolt the handlebar clamp with screws ❶ onto the longer, higher side of the handlebar support so that both parts touch.

Handlebar clamp screw	
M8	20 Nm (14.8 ft·lb$_f$)

Reworking

– Mount the handlebar pad.

11.1 Raising the motorcycle with a lift stand

NOTE

Material damage The vehicle may be damaged if parked incorrectly.

Damage can occur if the vehicle rolls away or falls over.

The components for parking the vehicle are designed only for the weight of the vehicle.

– Park the vehicle on a firm and level surface.
– Make sure that nobody sits on the vehicle when it is parked on a stand.

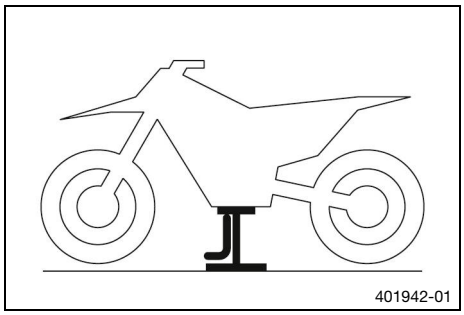

(All FC models)

– Raise the motorcycle at the frame underneath the engine.

Lift stand (81329955100)

✓ Neither wheel is in contact with the ground.

– Secure the motorcycle against falling over.

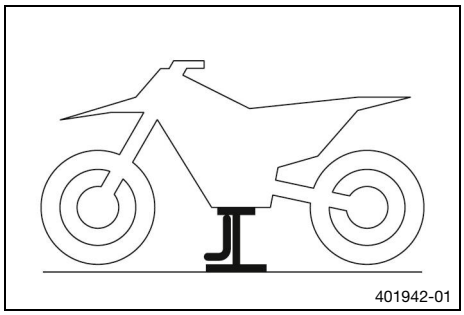

(FX)

– Fold in the side stand and raise the motorcycle at the frame underneath the engine.

Lift stand (81329955100)

✓ Neither wheel is in contact with the ground.

– Secure the motorcycle against falling over.

11.2 Removing the motorcycle from the lift stand

NOTE

Material damage The vehicle may be damaged if parked incorrectly.

Damage can occur if the vehicle rolls away or falls over.

The components for parking the vehicle are designed only for the weight of the vehicle.

– Park the vehicle on a firm and level surface.
– Make sure that nobody sits on the vehicle when it is parked on a stand.

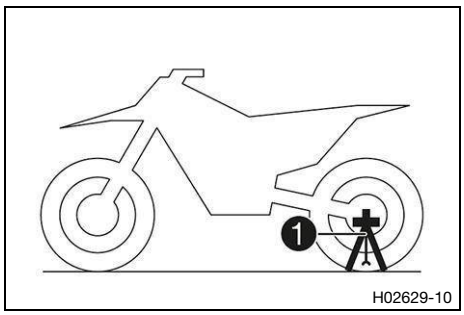

(All FC models)

– Remove the motorcycle from the lift stand.
– Remove the lift stand.
– To park the motorcycle, insert plug-in stand ❶ into the left side of the wheel spindle.

The plug-in stand must be removed before riding.

Plug-in stand (A46029094000)

Note
The plug-in stand is included in the scope of supply.

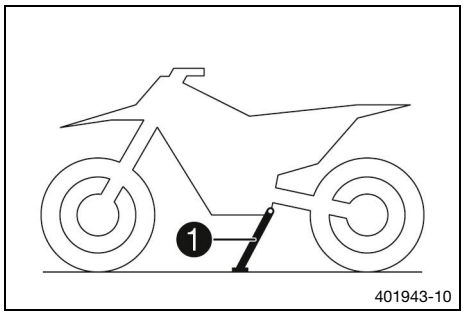

401943-10

(FX)

- Remove the motorcycle from the lift stand.
- Remove the lift stand.
- To park the motorcycle, press side stand ❶ to the ground with your foot and lean the motorcycle on it.

When you are riding, the side stand must be folded up and secured with the rubber band.

11.3 Bleeding the fork legs

Preparatory work

- Raise the motorcycle with a lift stand. (p. 60)

Main work

(All FC models)

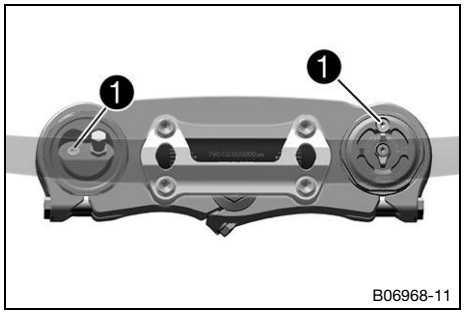

B06968-11

- Loosen bleeder screw ❶.
  ✓ Any excess pressure escapes from the inner fork.
- Tighten the bleeder screw.

(FX)

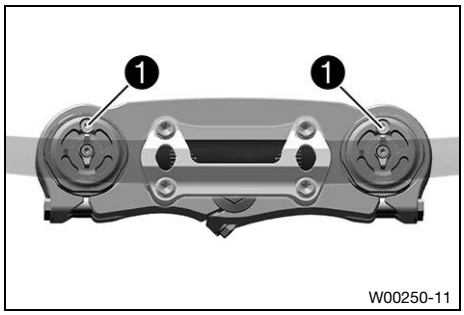

W00250-11

- Loosen bleeder screw ❶.
  ✓ Any excess pressure escapes from the inner fork.
- Tighten the bleeder screw.

Reworking

- Remove the motorcycle from the lift stand. (p. 60)

11.4 Cleaning the dust boots of the fork legs

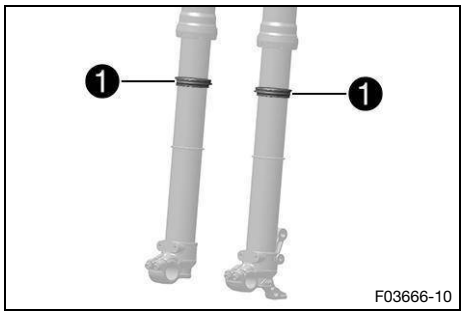

Preparatory work

– Raise the motorcycle with a lift stand. (p. 60)
– Remove the fork protector. (p. 62)

Main work

– Push dust boot ❶ downward on both fork legs.

> **Note**
> The dust boots should remove dust and coarse dirt particles from the inner fork tubes. Over time, dirt can accumulate behind the dust boots. If this dirt is not removed, the oil seals behind can start to leak.

> **WARNING**
> **Danger of accidents** Oil, grease or wax on the brake discs reduces the brake action.
> – Always keep the brake discs free of oil, fat and wax.
> – Clean the brake discs with brake cleaner when necessary.

– Clean and oil the dust boots and the inner fork tube of both fork legs.

Universal oil spray (p. 175)

– Press the dust boots back into their installation position.
– Remove excess oil.

Reworking

– Install the fork protector. (p. 63)
– Remove the motorcycle from the lift stand. (p. 60)

11.5 Removing the fork protector

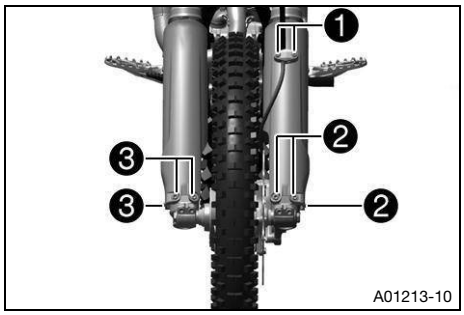

– Remove screw ❶ and take off the clamp.
– Remove screws ❷ and take off the left fork protector.
– Remove screws ❸ and take off the right fork protector.

11.6 Installing the fork protector

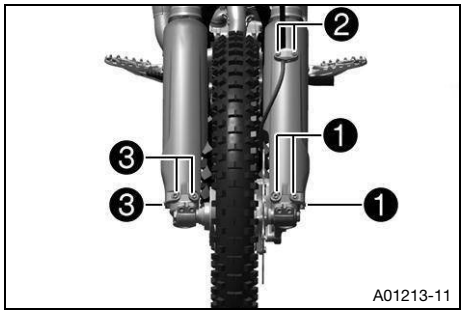

– Position the fork protector on the left fork leg.
– Mount and tighten screws ❶.

Remaining screws on chassis	
M6	10 Nm (7.4 ft·lb$_f$)

– Position the brake line and the clamp.
– Mount and tighten screws ❷.

Remaining screws on chassis	
EJOT PT® – K60×25 – Z	2 Nm (1.5 ft·lb$_f$)

– Position the fork protector on the right fork leg.
– Mount and tighten screws ❸.

Remaining screws on chassis	
M6	10 Nm (7.4 ft·lb$_f$)

11.7 Removing the frame protector

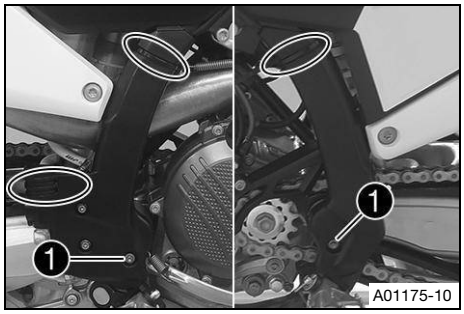

– Remove the cable ties.
– Remove screws ❶ and bushings.
– Take off the left frame protector.
– Push the right frame protector to the front and take off at the bottom.

11.8 Installing the frame protector

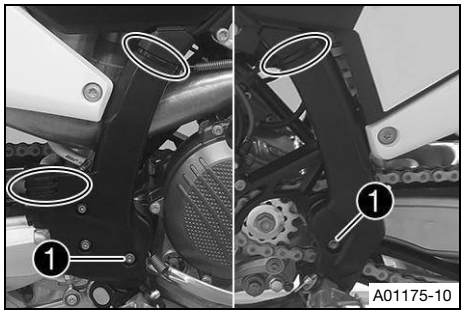

– Position the left frame protector.
– Insert the right frame protector from below and push it to the rear.
– Mount screw ❶ and bushing and tighten.

Screw, frame protector	
M5	3 Nm (2.2 ft·lb$_f$)

– Secure the frame protector with cable ties.

Turn the head of the cable tie so far back that it does not touch any other components.

11.9 Removing the skid plate (FX)

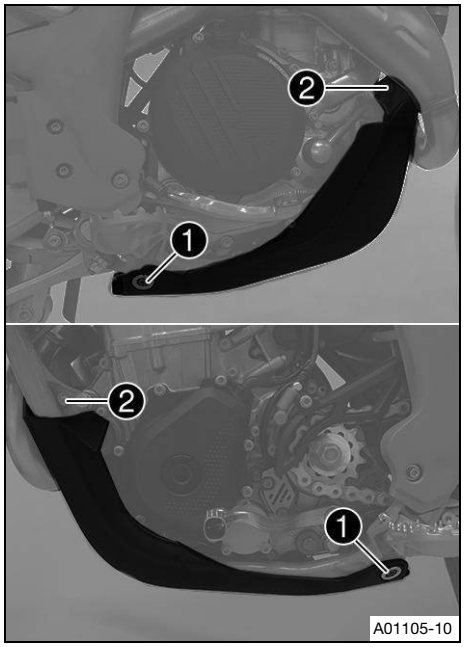

- Remove screws ❶ and bushings.
- Remove screw ❷.
- Take off the skid plate.

11.10 Installing the skid plate (FX)

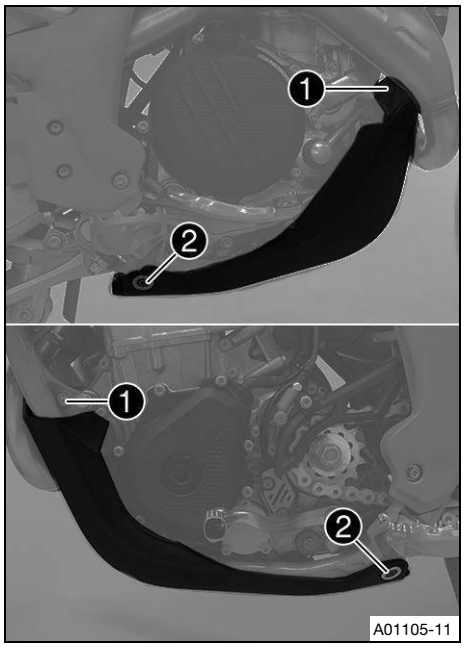

- Position the skid plate on the frame.
- Mount and tighten screws ❶ but do not tighten yet.

Remaining screws on chassis	
M6	10 Nm (7.4 ft·lb$_f$)

- Mount screws ❷ with bushings, but do not tighten yet.

Remaining screws on chassis	
M6	10 Nm (7.4 ft·lb$_f$)

✓ The skid plate is directed evenly toward the front.

- Tighten all the screws of the skid plate.

Remaining screws on chassis	
M6	10 Nm (7.4 ft·lb$_f$)

11.11 Removing the fork legs

Preparatory work

– Raise the motorcycle with a lift stand. (p. 60)
– Remove the front wheel. (p. 111)

Main work

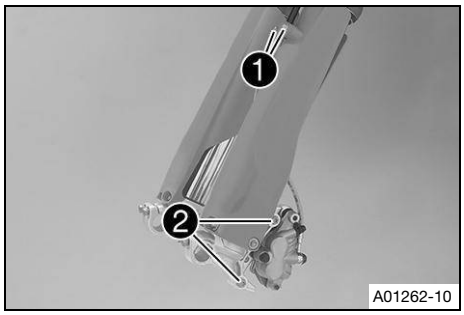

– Remove screw ❶ and take off the clamp.
– Remove screws ❷ and take off the brake caliper.
– Allow the brake caliper and the brake line to hang loosely to the side.

> Do not actuate the hand brake lever when the front wheel is removed.

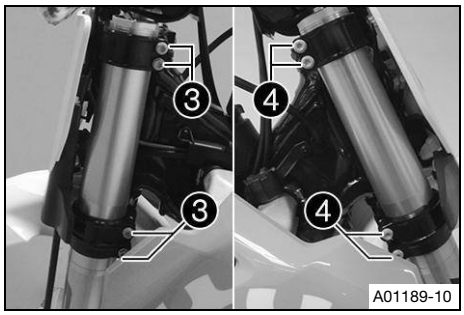

– Loosen screws ❸. Remove the left fork leg.
– Loosen screws ❹. Remove the right fork leg.

11.12 Installing the fork legs

Main work
(All FC models)

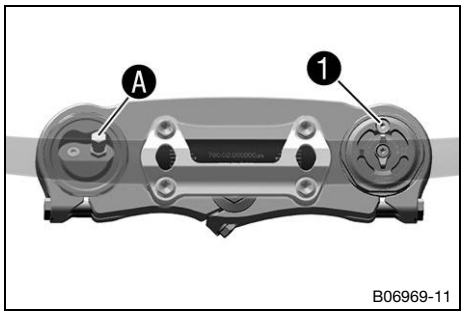

– Position the fork legs.
  ✓ Air bleeder screw ❶ of the right fork leg is positioned to the front.
  ✓ Valve Ⓐ of the left fork leg faces the front.

> **Note**
> Grooves are milled into the side of the upper end of the fork legs. The second milled groove (from the top) must be flush with the upper edge of the upper triple clamp.
> The air suspension is located in the left fork leg. The pressure and rebound damping is located in the right fork leg.

(FX)

– Position the fork legs.

✓ Bleeder screws ❶ are positioned toward the front.

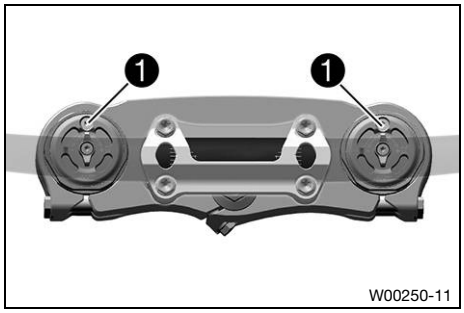

Note

Grooves are milled into the side of the upper end of the fork legs. The second milled groove (from the top) must be flush with the upper edge of the upper triple clamp.

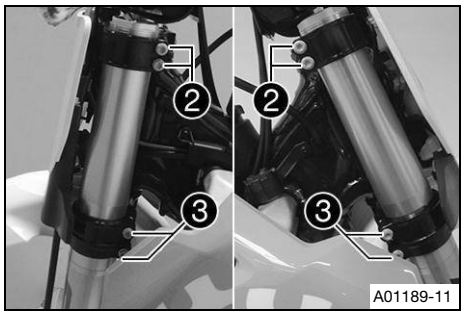

– Tighten screws ❷.

Screw, top triple clamp	
M8	17 Nm (12.5 ft·lb$_f$)

– Tighten screws ❸.

Screw, bottom triple clamp	
M8	12 Nm (8.9 ft·lb$_f$)

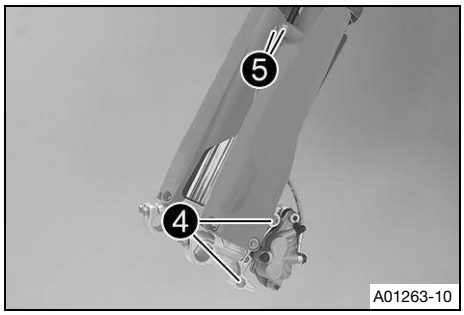

– Position the brake caliper.

– Mount and tighten screws ❹.

Screw, front brake caliper	
M8	25 Nm (18.4 ft·lb$_f$) **Loctite® 243**

– Position the brake line and the clamp.

– Mount and tighten screws ❺.

Remaining screws on chassis	
EJOT PT® – K60×25 – Z	2 Nm (1.5 ft·lb$_f$)

Reworking

– Install the front wheel. (p. 112)

11.13 Removing the lower triple clamp

Preparatory work

– Raise the motorcycle with a lift stand. (p. 60)

– Remove the front wheel. (p. 111)

– Remove the fork legs. (p. 65)

– Remove the number plate. (p. 72)

– Remove the front top fender. (p. 72)

– Remove the handlebar pad.

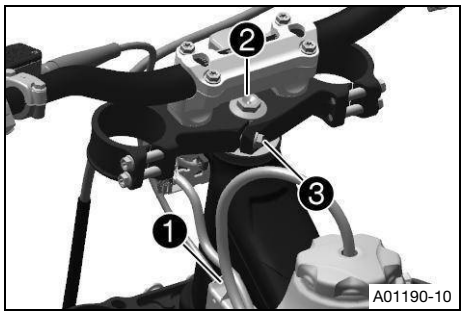

Main work

- Remove screw ❶. Detach the wiring harness.
- Remove screw ❷.
- Remove screw ❸.
- Take off the upper triple clamp with the handlebar and place to one side.

Protect the components against damage by covering them.
Do not kink the cables or lines.

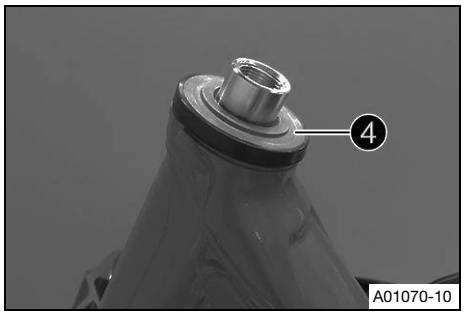

- Remove steering head seal ❹.
- Remove the steering stem from the lower triple clamp.
- Remove the upper steering head bearing.

11.14 Installing the lower triple clamp

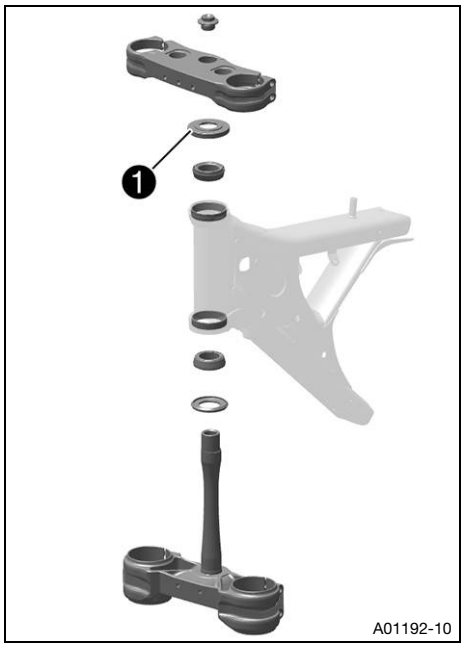

Main work

- Clean the bearing and sealing elements, check for damage, and grease.

High viscosity grease (p. 175)

- Insert the lower triple clamp with the steering stem. Mount the upper steering head bearing.
- Push on steering head seal ❶.

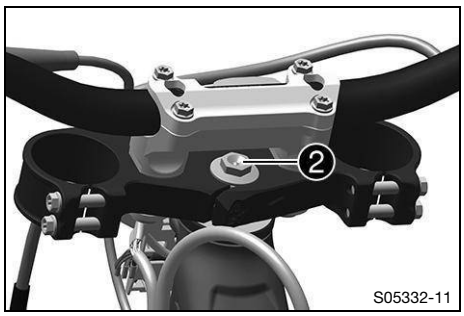

– Position the upper triple clamp and handlebar.
– Mount screw ❷, but do not tighten it yet.

Screw, top steering head	
M20×1.5	12 Nm (8.9 ft·lb$_f$)

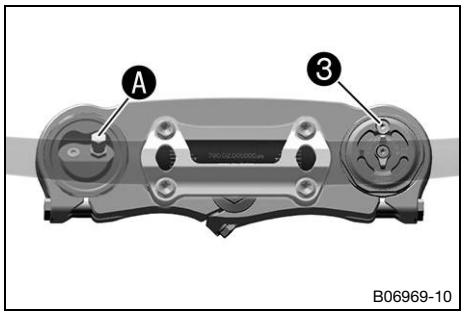

(All FC models)

– Position the fork legs.
  ✓ Air bleeder screw ❸ of the right fork leg is positioned to the front.
  ✓ Valve Ⓐ of the left fork leg faces the front.

Note
Grooves are milled into the side of the upper end of the fork legs. The second milled groove (from the top) must be flush with the upper edge of the upper triple clamp.
The air suspension is located in the left fork leg. The pressure and rebound damping is located in the right fork leg.

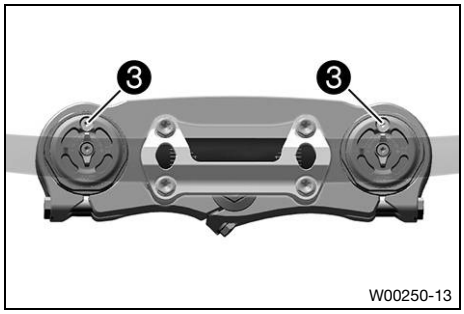

(FX)

– Position the fork legs.
  ✓ Bleeder screws ❸ of the fork legs are positioned toward the front.

Note
Grooves are milled into the side of the upper end of the fork legs. The second milled groove (from the top) must be flush with the upper edge of the upper triple clamp.
The pressure and rebound damping is located in the left and right fork leg.

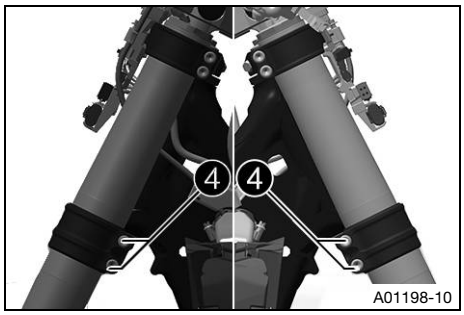

– Tighten screws ❹.

Screw, bottom triple clamp	
M8	12 Nm (8.9 ft·lb$_f$)

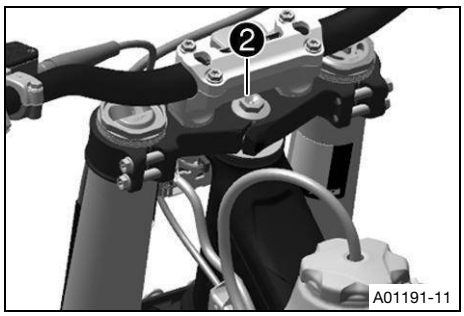

– Tighten screw ❷.

Screw, top steering head	
M20×1.5	12 Nm (8.9 ft·lb$_f$)

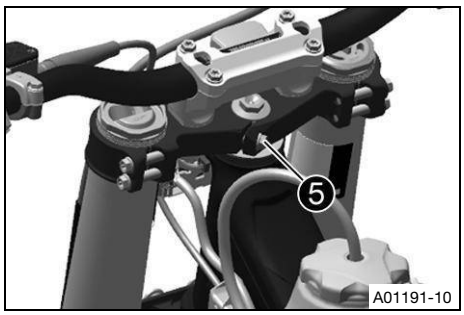

– Mount and tighten screw ❺.

Screw, upper steering stem	
M8	20 Nm (14.8 ft·lb$_f$) **Loctite® 243**

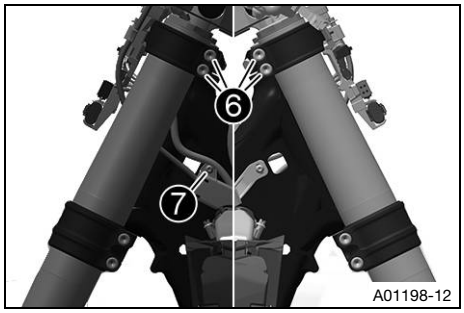

– Using a plastic hammer, tap lightly on the upper triple clamp to avoid stresses.
– Tighten screws ❻.

Screw, top triple clamp	
M8	17 Nm (12.5 ft·lb$_f$)

– Secure the wiring harness with the left cable bracket. Mount and tighten screw ❼.

Remaining screws on chassis	
M5	5 Nm (3.7 ft·lb$_f$)

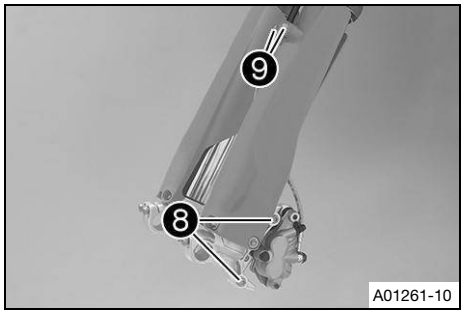

– Position the brake caliper.
– Mount and tighten screws ❽.

Screw, front brake caliper	
M8	25 Nm (18.4 ft·lb$_f$) **Loctite® 243**

– Position the brake line and the clamp.
– Mount and tighten screws ❾.

Remaining screws on chassis	
EJOT PT® – K60×25 – Z	2 Nm (1.5 ft·lb$_f$)

Reworking

– Install the front top fender. (p. 73)
– Mount the handlebar pad.
– Mount the number plate. (p. 72)
– Install the front wheel. (p. 112)

– Check the wiring harness, cables, and brake and clutch lines for freedom of movement and correct routing.
– Check the steering head bearing play. (p. 70)
– Remove the motorcycle from the lift stand. (p. 60)

11.15 Checking the steering head bearing play

WARNING
Danger of accidents Incorrect steering head bearing play can impair the handling characteristic and damage components.
– Correct incorrect steering head bearing play immediately.

Note
If the vehicle is operated for a lengthy period with play in the steering head bearing, the bearings and the bearing seats in the frame can become damaged.

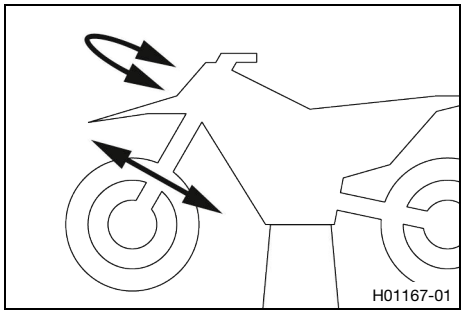

Preparatory work
– Raise the motorcycle with a lift stand. (p. 60)

Main work
– Move the handlebar to the straight-ahead position. Move the fork legs to and fro in the direction of travel.

Play should not be detectable on the steering head bearing.

» If there is detectable play:
  – Adjust the steering head bearing play. (p. 71)
– Move the handlebar back and forth over the entire steering range.

It must be possible to move the handlebar easily over the entire steering range. There should be no detectable detent positions.

» If detent positions are detected:
  – Adjust the steering head bearing play. (p. 71)
  – Check the steering head bearing and adjust if necessary.

Reworking
– Remove the motorcycle from the lift stand. (p. 60)

11.16 Adjusting the steering head bearing play

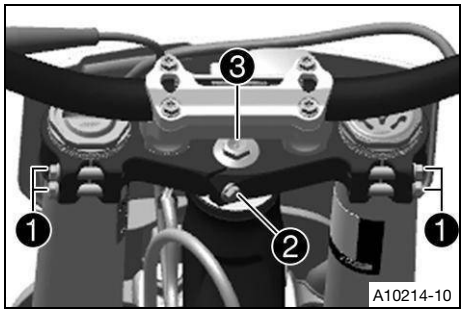

Preparatory work

– Raise the motorcycle with a lift stand. (p. 60)
– Remove the handlebar pad.

Main work

– Loosen screws ❶.
– Remove screw ❷.
– Loosen and retighten screw ❸.

Screw, top steering head	
M20×1.5	12 Nm (8.9 ft·lb$_f$)

– Using a plastic hammer, tap lightly on the upper triple clamp to avoid stresses.
– Mount and tighten screw ❷.

Screw, upper steering stem	
M8	20 Nm (14.8 ft·lb$_f$) **Loctite® 243**

– Tighten screws ❶.

Screw, top triple clamp	
M8	17 Nm (12.5 ft·lb$_f$)

Reworking

– Check the steering head bearing play. (p. 70)
– Mount the handlebar pad.
– Remove the motorcycle from the lift stand. (p. 60)

11.17 Lubricating the steering head bearing

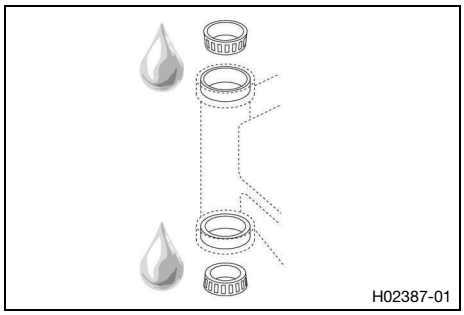

– Remove the lower triple clamp. (p. 66)
– Install the lower triple clamp. (p. 67)

Note

The steering head bearing is cleaned and lubricated in the course of removal and installation of the lower triple clamp.

11.18 Removing the number plate

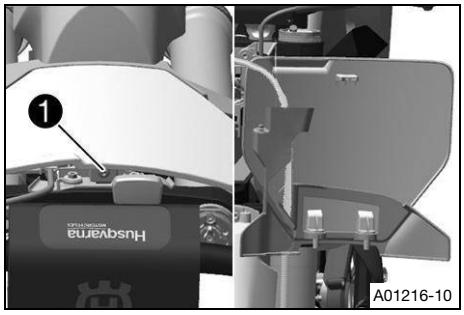

– Remove screw ❶.
– Unhook the number plate from the brake line and remove it.

11.19 Mounting the number plate

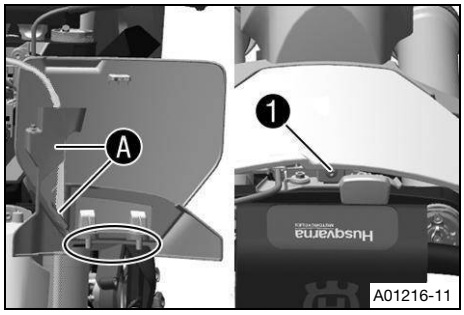

– Position the brake line in holders Ⓐ on the number plate.
– Position the number plate.
– Mount and tighten screw ❶.

Remaining screws on chassis	
M6	10 Nm (7.4 ft·lb$_f$)

✓ The holding lugs engage in the fender.

11.20 Removing the front top fender

Preparatory work

– Remove the number plate. (p. 72)

Main work

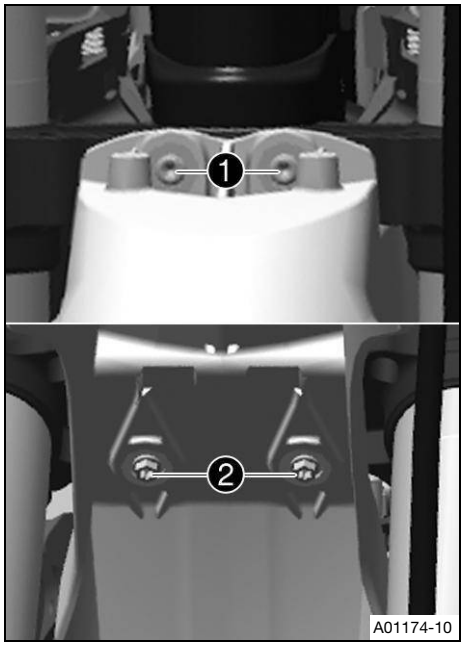

– Remove screws ❶ and ❷. Remove the front fender.

11.21 Installing the front top fender

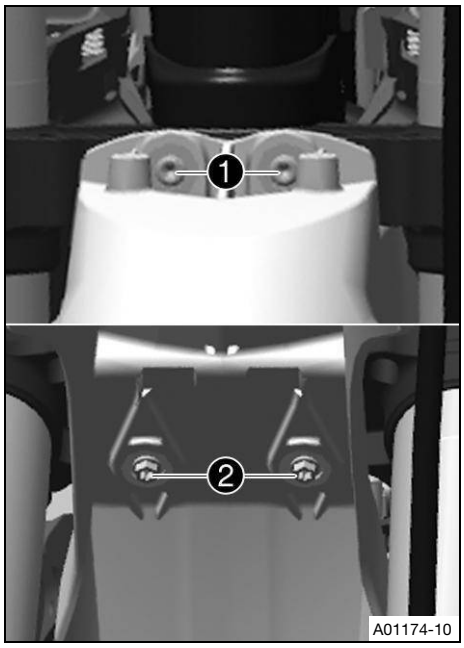

Main work

– Position the front fender. Mount and tighten screws ❶ and ❷.

Screw, fender on triple clamp	
M6	12 Nm (8.9 ft·lb$_f$)

Reworking

– Mount the number plate. (p. 72)

11.22 Removing the shock absorber

Preparatory work

– Raise the motorcycle with a lift stand. (p. 60)
– Remove the frame protector. (p. 63)
– Remove the seat. (p. 76)
– Remove the right side fairing. (p. 82)
– Remove the muffler. (p. 83)

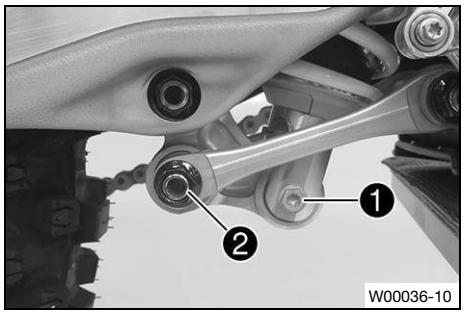

Main work

– Remove screw ❶.
– Remove screw connection ❷.

Tip
Raise the swingarm slightly to be able to remove the screws more easily.

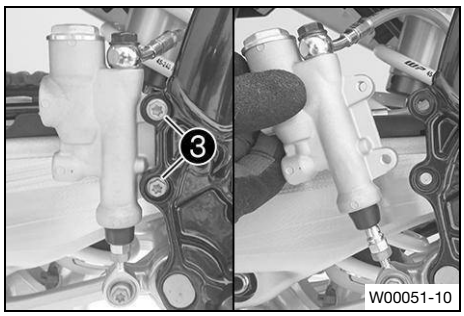

– Remove screws ❸.
– Pull rear brake cylinder off of the push rod.

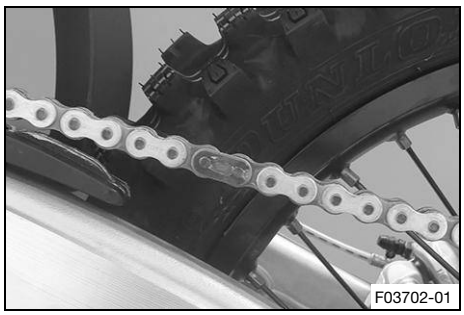

– Remove the connecting link on the chain.
– Take off the chain.

Protect the components against damage by covering them.

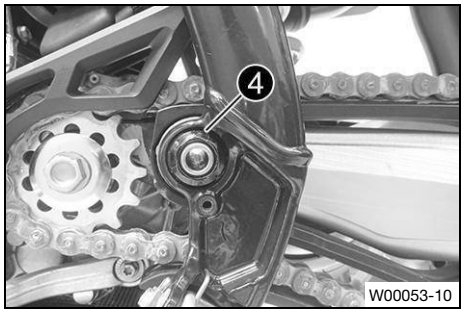

– Remove nut ❹ and the swingarm pivot.
– Push the swingarm back and secure it against falling over.

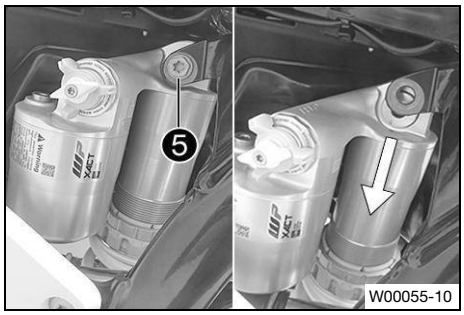

– Hold the shock absorber and remove screw ❺.
– Remove the shock absorber carefully at the bottom.

11.23 Installing the shock absorber

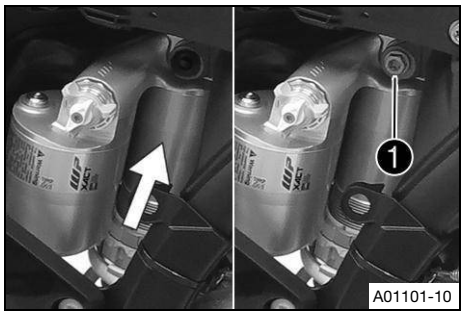

Main work

– Carefully position the shock absorber into the vehicle from the bottom.
– Mount and tighten screw ❶.

Top shock absorber screw	
M10	60 Nm (44.3 ft·lb$_f$) **Loctite® 2701**

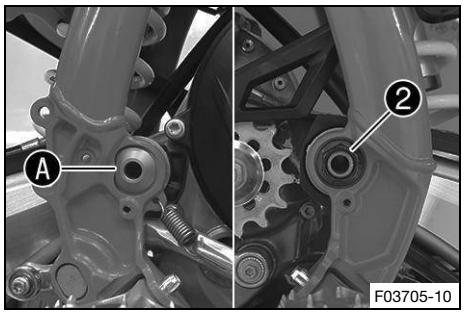

– Position the swingarm and fit the swingarm pivot.

Pay attention to flat area Ⓐ.

– Mount and tighten nut ❷.

Nut, swingarm pivot	
M16×1.5	100 Nm (73.8 ft·lb$_f$)

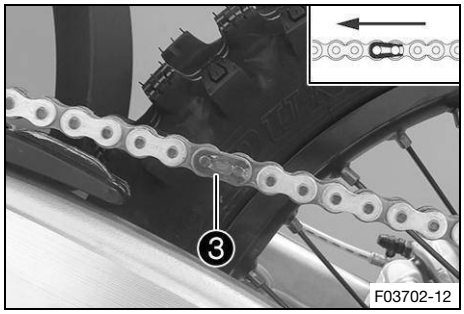

– Mount the chain.
– Connect the chain with connecting link ❸.

The closed side of the master link clip must face in the direction of travel.

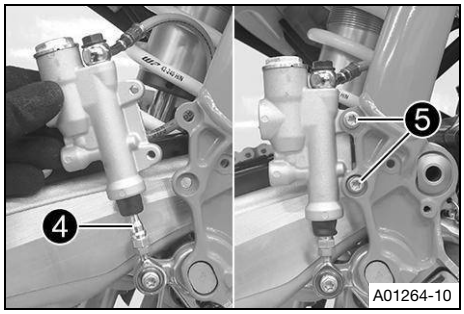

– Position the rear brake cylinder.

Ensure that the dust boot is properly seated.

✓ Push rod ❹ engages in the rear brake cylinder.
– Mount and tighten screws ❺.

Remaining screws on chassis	
M6	10 Nm (7.4 ft·lb$_f$)

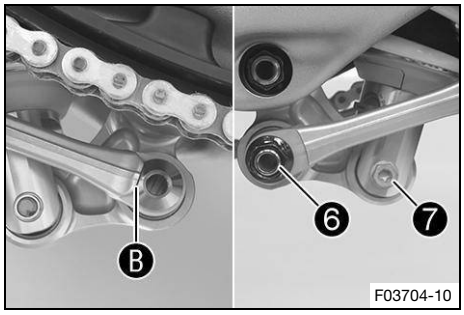

– Position the power valve control lever and linkage lever.
– Mount and tighten screw connection ❻.

Pay attention to flat area Ⓑ.

Nut, linkage lever on angle lever	
M14×1.5	60 Nm (44.3 ft·lb$_f$)

– Mount and tighten screw ❼.

Bottom shock absorber screw	
M10	60 Nm (44.3 ft·lb$_f$) **Loctite® 2701**

Tip
Raise the swingarm slightly to be able to mount the screw more easily.

Reworking
– Install the muffler. (p. 84)
– Install the right side cover. (p. 83)
– Mount the seat. (p. 77)
– Install the frame protector. (p. 63)
– Check the free travel of the brake pedal. (p. 105)
– Remove the motorcycle from the lift stand. (p. 60)

11.24 Removing the seat

CAUTION
Danger of burns The regulator rectifier gets very hot when the vehicle is operated.
– Allow the regulator rectifier to cool down before performing any work.

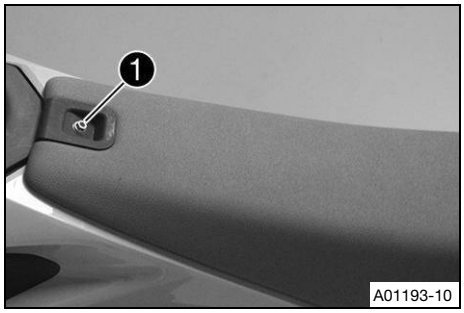

– Remove screw ❶.

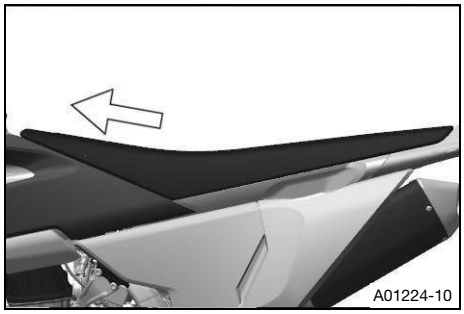

– Raise seat, pull it toward the fuel tank and take it off.

11.25 Mounting the seat

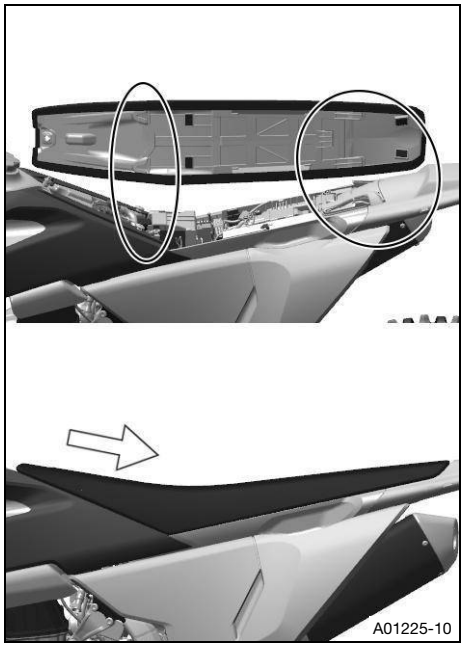

– Attach the seat to the collar bushings at the front and simultaneously push it back.
  ✓ The holding lugs engage in the recesses at the back.
– Make sure the seat is latched in place correctly.

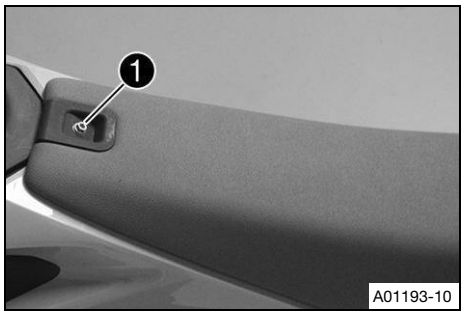

– Mount and tighten screw ❶.

Screw, seat installation	
M6	8 Nm (5.9 ft·lb$_f$)

11.26 Removing air filter box cover

Condition: Air filter box cover secured

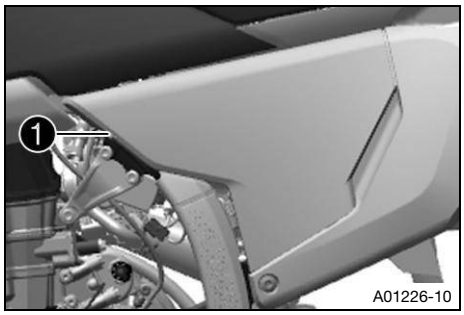

– Remove screw ❶.

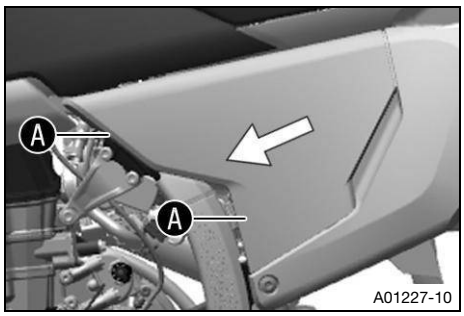

– Pull off the air filter box cover in areas A and push it sideways and forward. Remove air filter box cover.

Condition: Air filter box cover not secured

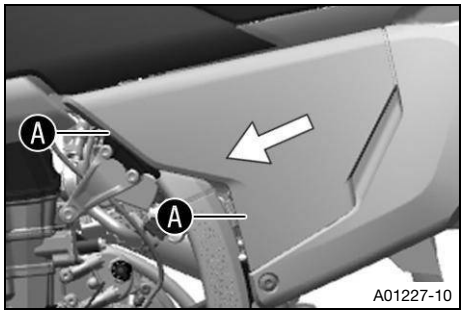

– Pull off the air filter box cover in areas A and push it sideways and forward. Remove air filter box cover.

11.27 Installing air filter box cover

Condition: Air filter box cover secured

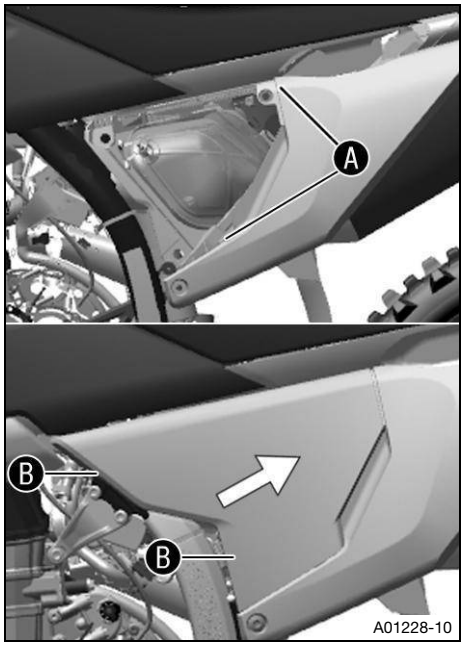

– Attach the air filter box cover in areas A and clip in areas B.

Note
An air filter box cover with openings for greater airflow and a more direct response is included.

– Mount and tighten screw ❶.

Screw, air filter box cover	
EJOT PT® – K60×20 – Z	5 Nm (3.7 ft·lb$_f$)

Condition: Air filter box cover not secured

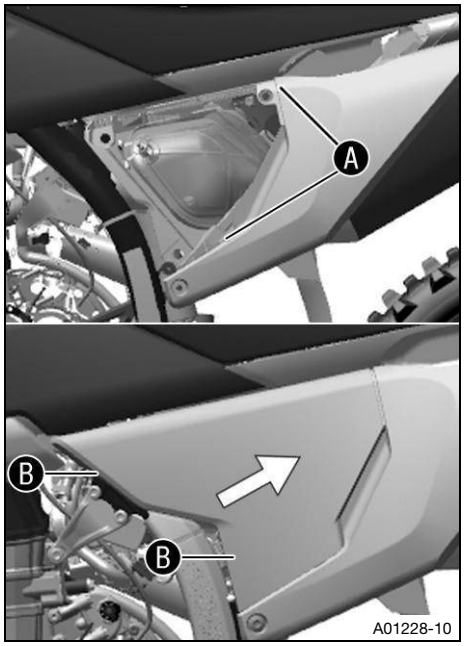

– Attach the air filter box cover in areas Ⓐ and clip in areas Ⓑ.

Note
An air filter box cover with openings for greater airflow and a more direct response is included.

11.28 Removing the air filter

NOTE
Engine failure Unfiltered intake air has a negative effect on the service life of the engine.
Dust and dirt can enter the engine if there is no air filter or if the air filter is mounted incorrectly.
– Only operate the vehicle if an air filter is correctly fitted.

NOTE
Environmental hazard Hazardous substances cause environmental damage.
– Dispose of oils, grease, filters, fuel, cleaning agents, brake fluid, etc. correctly and in accordance with the applicable regulations.

Preparatory work
– Remove air filter box cover. (p. 77)

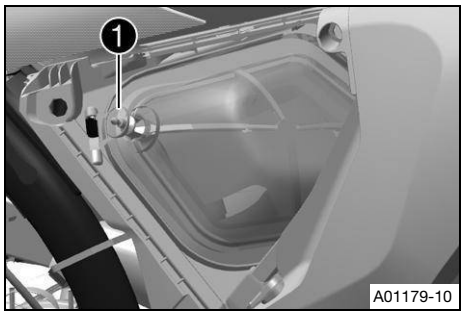

Main work

– Detach tab ❶.
– Remove air filter with air filter support.
– Remove the air filter with the air filter support.

11.29 Installing the air filter

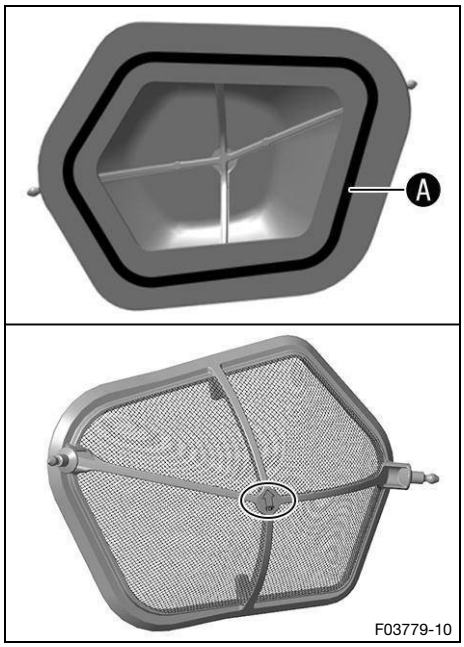

Main work

– Mount the clean air filter on the air filter support.

The marking on the air filter support must face upwards.

– Grease the air filter in area Ⓐ.

Long-life grease (p. 175)

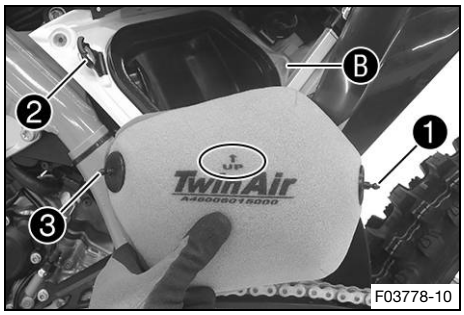

– Insert air filter and position retaining pin ❶ in bushing Ⓑ.

The marking on the air filter must face upwards.

✓ The air filter is correctly positioned.

– Attach tab ❷.

✓ Retaining pin ❸ is secured by tab ❷.

Note
If the air filter is not mounted correctly, dust and dirt may enter the engine and result in damage.

Reworking

– Install the air filter box cover. (p. 78)

11.30 Cleaning the air filter and air filter box

NOTE

Environmental hazard Hazardous substances cause environmental damage.

– Dispose of oils, grease, filters, fuel, cleaning agents, brake fluid, etc. correctly and in accordance with the applicable regulations.

Preparatory work

– Remove air filter box cover. (p. 77)
– Remove the air filter. (p. 79)

Main work

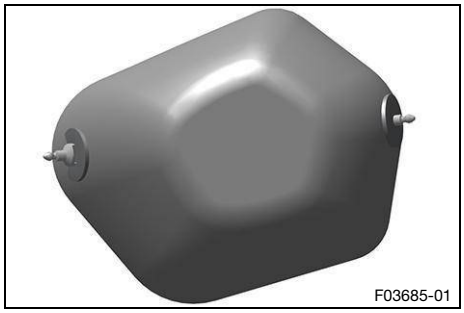

– Wash the air filter thoroughly in special cleaning liquid and allow it to dry properly.

Do not clean the air filter with fuel or petroleum as these substances will damage the foam rubber.
Only press the air filter to dry it, do not wring it out.

Air filter cleaning agent (p. 178)

– Oil the dry air filter with a high-grade air filter oil.

Oil for foam air filter (p. 176)

– Clean the air filter box.
– Clean the intake flange and check it for damage and that it is firmly seated.

Reworking

– Install the air filter. (p. 80)
– Install the air filter box cover. (p. 78)

11.31 Securing the air filter box cover

Preparatory work

– Remove air filter box cover. (p. 77)

Main work

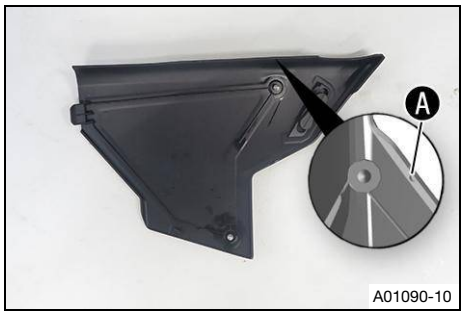

– Drill a hole at marking A.

Diameter	6 mm (0.24 in)

Reworking

– Install the air filter box cover. (p. 78)

11.32 Removing the right side fairing

Preparatory work

– Remove the seat. (p. 76)

Main work

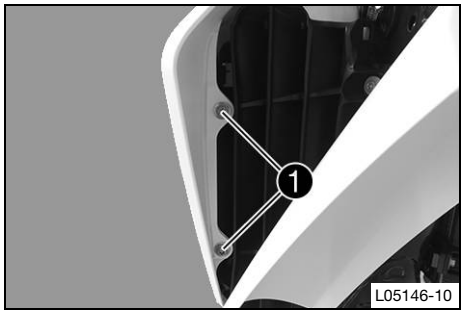

– Remove screws ❶.

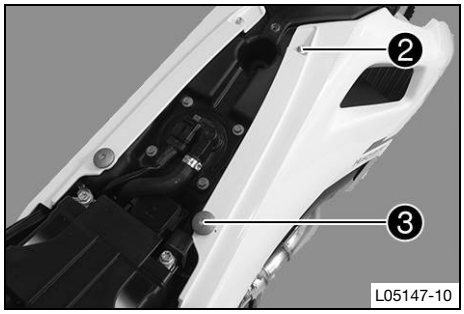

– Remove screw ❷.
– Remove screw ❸.

– Detach the side fairing in area Ⓐ and remove it toward the rear.

11.33 Installing the right side cover

Main work

– Position the right side fairing and press it forward to lock it into place.

– Press the side fairing into the rubber bushing in area Ⓐ.

Make sure the side fairing is correctly hooked into area Ⓐ.

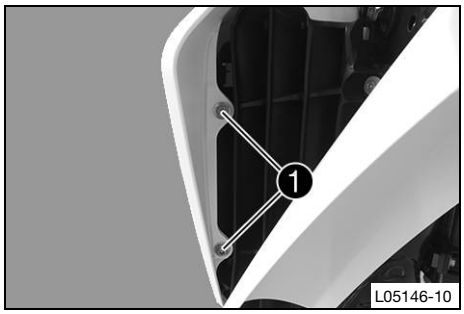

– Mount and tighten screws ❶.

Screw, fuel tank spoiler on radiator	
M6	6 Nm (4.4 ft·lb$_f$)

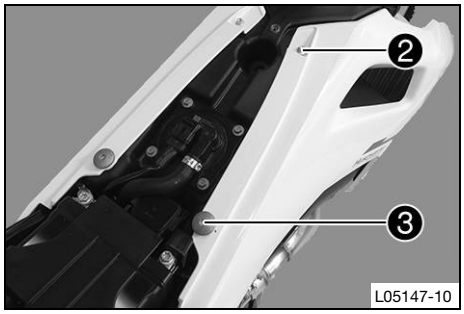

– Mount and tighten screw ❷.

Screw, seat installation	
EJOT EJOFORM® – K60×23/18	2.5 Nm (1.84 ft·lb$_f$)

– Mount and tighten screw ❸.

Screw, seat installation	
EJOT EJOFORM® – K60×23/18	2.5 Nm (1.84 ft·lb$_f$)

Reworking

– Mount the seat. (p. 77)

11.34 Removing the muffler

WARNING

Danger of burns The exhaust system gets hot when the vehicle is driven.

– Allow the exhaust system to cool down before performing any work on the vehicle.

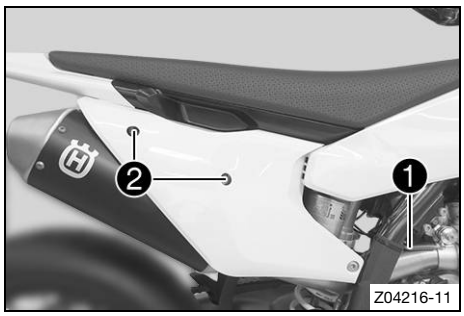

– Detach spring ❶.

Spring hook (50305017000C1)

– Remove screws ❷ with the washers and take off the main silencer.

11.35 Installing muffler

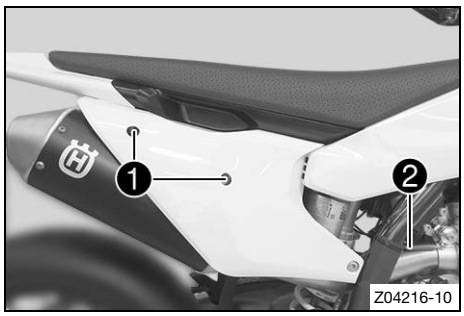

– Position the main silencer.
– Mount screws ❶ with washers, but do not tighten yet.
– Attach spring ❷.

Spring hook (50305017000C1)

– Tighten screws ❶.

Remaining screws on chassis	
M6	10 Nm (7.4 ft·lb$_f$)

11.36 Changing the damping material on the main silencer

WARNING
Danger of burns The exhaust system gets hot when the vehicle is driven.
– Allow the exhaust system to cool down before performing any work on the vehicle.

Note
Over time, the damping material fibers disappear, and the main silencer “burns out”.
Not only does this make the noise level higher, but the performance characteristics also change.

Preparatory work
– Remove the muffler. (p. 83)

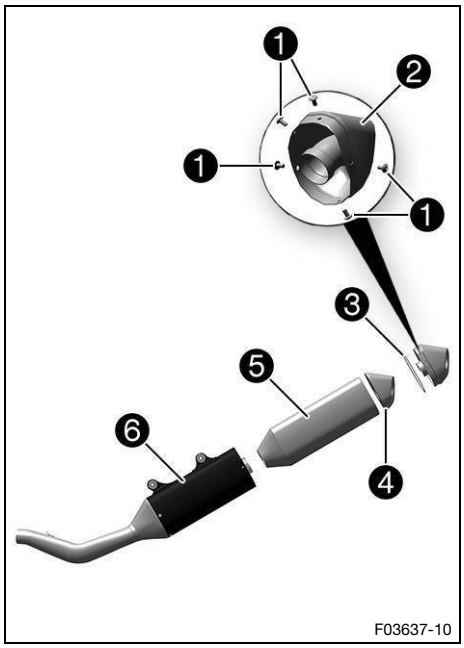

Main work

- Remove the screws ❶ on the main silencer.
- Take off silencer cap ❷ and O-ring ❸.
- Pull damping material ❹ out of the silencer cap.
- Pull damping material ❺ off the inner tube.
- Clean the parts that need to be reinstalled and check for damage.
- Mount new damping material ❺ on the inner tube.
- Position new damping material ❹ in the silencer cap.
- Insert O-ring and silencer cap into outer tube ❻.
- Mount and tighten screws ❶.

Screws on muffler	
M5	5 Nm (3.7 ft·lb$_f$)

Reworking

- Install the muffler. (p. 84)

11.37 Removing the fuel tank

DANGER

Fire hazard Fuel is highly flammable.

The fuel in the fuel tank expands when warm and can escape if overfilled.

- Do not refuel the vehicle in the vicinity of open flames, glowing, or smoldering objects.
- Make sure that nobody smokes in the vicinity of the vehicle during the refueling process.
- Switch off the engine for refueling.
- Make sure that no fuel is spilled; particularly not on hot parts of the vehicle.
- If any fuel is spilled, wipe it up immediately.
- Do not overfill the fuel tank.

WARNING

Danger of poisoning Fuel is harmful to health.

- Do not allow fuel to come into contact with skin, eyes, or clothing.
- Consult a doctor immediately if fuel has been ingested.
- Do not inhale fuel vapors.
- Rinse the affected area immediately with plenty of water in the event of contact with skin.
- Rinse eyes thoroughly with water and consult a doctor immediately if fuel comes into contact with eyes.
- If fuel spills on to your clothing, change the clothing.
- Store fuel properly in a suitable container and keep out of the reach of children.

NOTE

Environmental hazard Improper handling of fuel is dangerous to the environment.

- Do not allow fuel to enter the groundwater, the soil, or the sewage system.

Preparatory work

– Remove the seat. (p. 76)

Main work

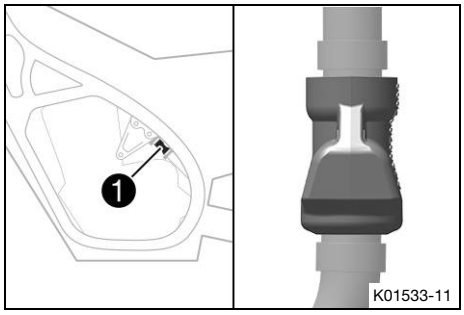

– Remove protection cap ❶ of the fuel line.

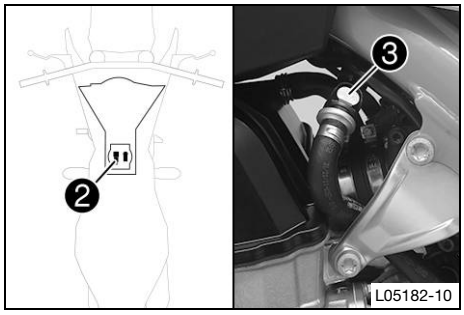

– Unplug socket connector ❷ of the fuel pump.
– Clean quick-lock coupling ❸ thoroughly with compressed air.

Dust must not enter the fuel line. Dirt in the fuel line clogs the injector!

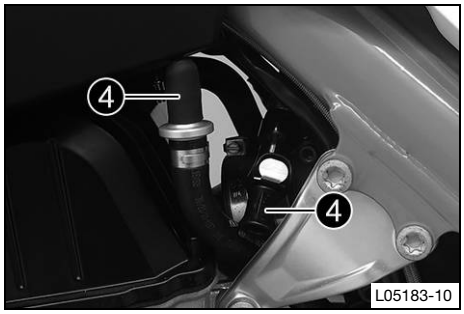

– Disconnect the quick-lock coupling.

Note
Remaining fuel may flow out of the fuel hose.

– Mount wash cap set ❹.

Wash cap set (81212016100)

– Pull the fuel tank vent hose off the fuel tank cap.

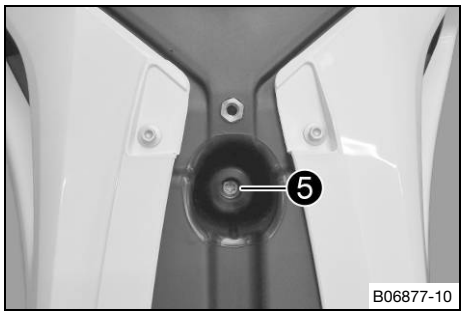

– Remove screw ❺ with the rubber bushing.

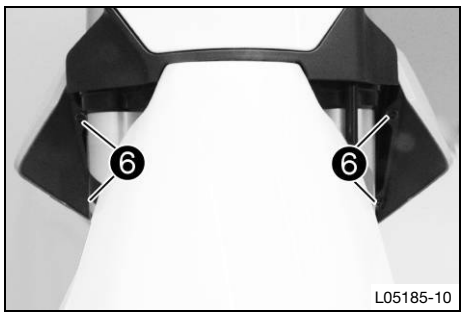

– Remove screws ❻ with the collar bushings.

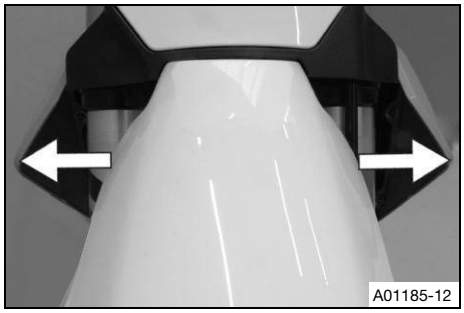

– Pull both spoilers laterally off the radiator and lift off the fuel tank.

11.38 Installing the fuel tank

DANGER
Fire hazard Fuel is highly flammable.
The fuel in the fuel tank expands when warm and can escape if overfilled.
– Do not refuel the vehicle in the vicinity of open flames, glowing, or smoldering objects.
– Make sure that nobody smokes in the vicinity of the vehicle during the refueling process.
– Switch off the engine for refueling.
– Make sure that no fuel is spilled; particularly not on hot parts of the vehicle.
– If any fuel is spilled, wipe it up immediately.
– Do not overfill the fuel tank.

WARNING
Danger of poisoning Fuel is harmful to health.
– Do not allow fuel to come into contact with skin, eyes, or clothing.
– Consult a doctor immediately if fuel has been ingested.
– Do not inhale fuel vapors.
– Rinse the affected area immediately with plenty of water in the event of contact with skin.
– Rinse eyes thoroughly with water and consult a doctor immediately if fuel comes into contact with eyes.
– If fuel spills on to your clothing, change the clothing.
– Store fuel properly in a suitable container and keep out of the reach of children.

NOTE
Environmental hazard Improper handling of fuel is dangerous to the environment.
– Do not allow fuel to enter the groundwater, the soil, or the sewage system.

Main work
– Check the throttle cable routing. (p. 94)

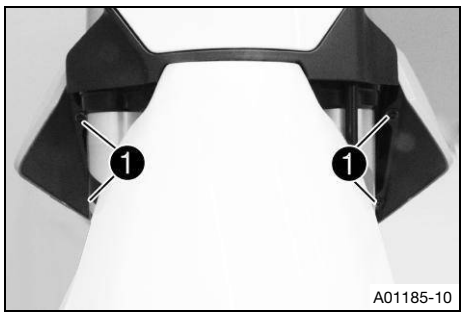

– Position the fuel tank and fit both spoilers to the side of the radiator.

Make sure that no wires or cables are trapped or damaged.

– Attach the fuel tank vent hose to the fuel tank cap.
– Mount and tighten screws ❶ with the collar bushings.

Screw, fuel tank spoiler on radiator	
M6	6 Nm (4.4 ft·lb$_f$)

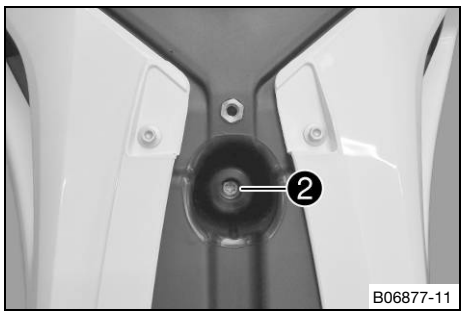

– Mount and tighten screw ❷ with the rubber bushing.

Remaining screws on chassis	
M6	10 Nm (7.4 ft·lb$_f$)

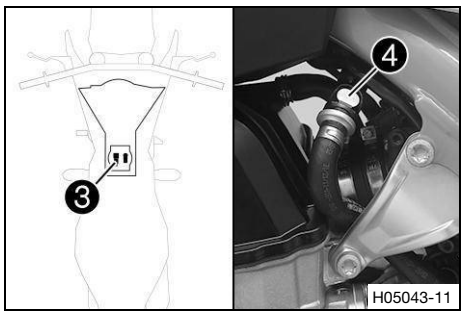

– Plug in fuel pump socket connector ❸.
– Remove the wash cap set and thoroughly clean the quick-lock coupling using compressed air.

Dust must not enter the fuel line. Dirt in the fuel line clogs the injector!

– Spray silicone spray onto a lint-free cleaning cloth and lightly lubricate the O-ring of the quick-lock coupling.

Silicone spray (p. 176)

– Join quick-lock coupling ❹ of the fuel line.

Route the wire and fuel line at a safe distance from the exhaust system.

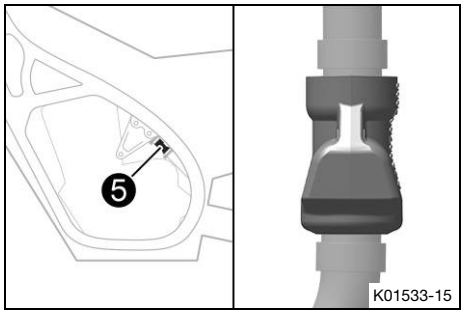

– Mount protection cap ❺ of the fuel line.

Reworking

– Mount the seat. (p. 77)

11.39 Checking the chain for dirt

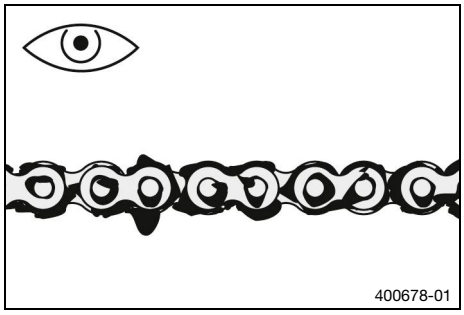

– Check the chain for coarse dirt accumulation.
  » If the chain is very dirty:
    – Clean the chain. (p. 89)

11.40 Cleaning the chain

WARNING
Danger of accidents Oil, grease or wax on the brake discs reduces the brake action.
– Always keep the brake discs free of oil, fat and wax.
– Clean the brake discs with brake cleaner when necessary.

WARNING
Danger of accidents Lubricants on the tires reduces the road grip.
– Remove lubricants from the tires using a suitable cleaning agent.

NOTE
Environmental hazard Hazardous substances cause environmental damage.
– Dispose of oils, grease, filters, fuel, cleaning agents, brake fluid, etc. correctly and in accordance with the applicable regulations.

Note
The service life of the chain depends largely on its maintenance.

Preparatory work
– Raise the motorcycle with a lift stand. (p. 60)

Main work
– Rinse off the loose dirt with a gentle jet of water.
– Remove old grease residues with a chain cleaner.

Chain cleaner (p. 178)

– After drying, apply chain spray.

Off-road chain spray (p. 175)

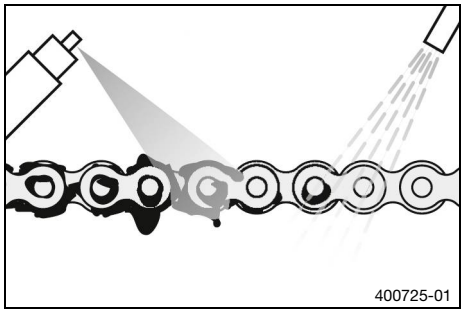

Reworking
– Remove the motorcycle from the lift stand. (p. 60)

11.41 Checking the chain tension

WARNING

Danger of accidents Incorrect chain tension can damage components and result in an accident.

If the chain is tension is too high, the chain, front sprocket, rear sprocket, transmission, and rear wheel bearings wear more quickly. Some components may break if overloaded.

If the chain is too loose, the chain may fall off the front sprocket or the rear sprocket. This can damage the rear wheel or the engine.

– Check the chain tension regularly.
– Set the chain tension in accordance with the specification.

Preparatory work

– Raise the motorcycle with a lift stand. (p. 60)

Main work

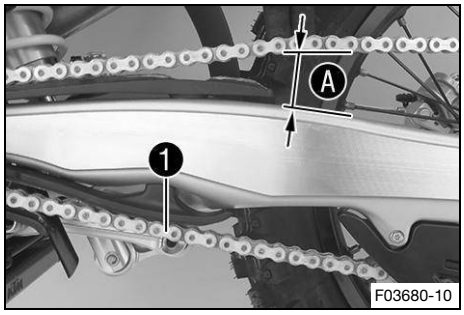

– Pull the chain at the end of the chain slider upward to measure chain tension A.

Chain tension	58 mm … 61 mm (2.28 in … 2.40 in)
Lower chain section 1 must be taut.	
Repeat this measurement at different chain positions.	

Note

Chains do not always wear evenly.

» If the chain tension does not meet the specification:
  – Adjust the chain tension. (p. 90)

Reworking

– Remove the motorcycle from the lift stand. (p. 60)

11.42 Adjusting the chain tension

WARNING

Danger of accidents Incorrect chain tension can damage components and result in an accident.

If the chain is tension is too high, the chain, front sprocket, rear sprocket, transmission, and rear wheel bearings wear more quickly. Some components may break if overloaded.

If the chain is too loose, the chain may fall off the front sprocket or the rear sprocket. This can damage the rear wheel or the engine.

– Check the chain tension regularly.
– Set the chain tension in accordance with the specification.

Preparatory work

– Raise the motorcycle with a lift stand. (p. 60)
– Check the chain tension. (p. 90)

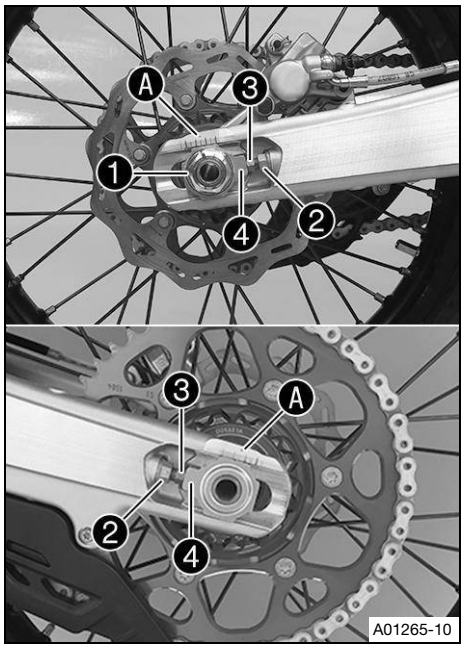

Main work

– Loosen nut ❶.
– Loosen nuts ❷.
– Adjust the chain tension by turning adjusting screws ❸ left and right.

Chain tension	58 mm … 61 mm (2.28 in … 2.40 in)
In order for the rear wheel to be correctly aligned, the markings on the left and right chain adjusters must be in the same position relative to reference markings Ⓐ.	

– Tighten nuts ❷.
– Make sure that chain adjusters ❹ are fitted correctly on adjusting screws ❸.
– Tighten nut ❶.

Nut, wheel spindle, rear	
M22×1.5	80 Nm (59.0 ft·lb$_f$)

Note

The wide adjustment range of the chain adjusters enables different secondary ratios with the same chain length.

Chain adjusters ❹ can be turned by 180°.

Reworking

– Remove the motorcycle from the lift stand. (p. 60)

11.43 Checking the chain, rear sprocket, front sprocket, and chain guide

Preparatory work

– Raise the motorcycle with a lift stand. (p. 60)

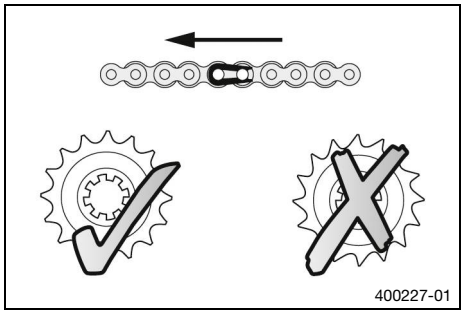

Main work

– Shift the transmission into the neutral position.
– Check the chain, rear sprocket, and front sprocket for wear.
  » If the chain, rear sprocket, or front sprocket is worn:
    – Change the drivetrain kit.

Always replace the front sprocket, rear sprocket, and chain together.

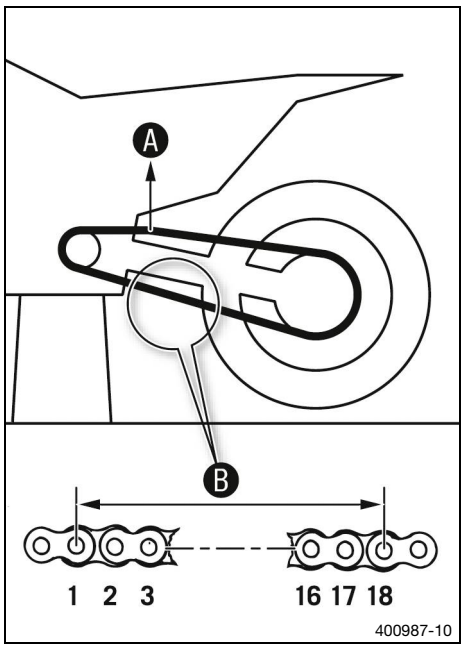

– Pull on the top section of the chain with the specified weight A.

Weight, chain wear measurement	10 kg … 15 kg (22.0 lb … 33.1 lb)

– Measure distance B of chain rollers in the lower chain section.

Maximum distance B of chain rollers at the longest chain section	272 mm (10.71 in)
Repeat this measurement at different chain positions.	

Note
Chains do not always wear evenly.

» If distance B is greater than the specified measurement:
  – Change the drivetrain kit.

When installing a new chain, also replace the rear sprocket and front sprocket.

Note
New chains wear out faster on old, worn front or rear sprockets.

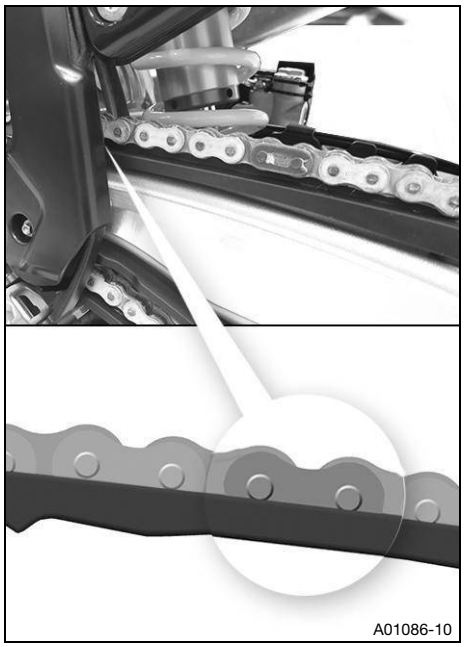

– Check the chain slider at the top for wear.
  » If the lower edge of the chain pins is in line with, or below, the chain slider:
    – Change the chain slider.
– Check that the chain slider is firmly seated.
  » If the chain slider is loose:
    – Tighten the screws of the chain slider.

Screw, chain sliding guard on link fork	
M6	6 Nm (4.4 ft·lb$_f$) **Loctite® 243**

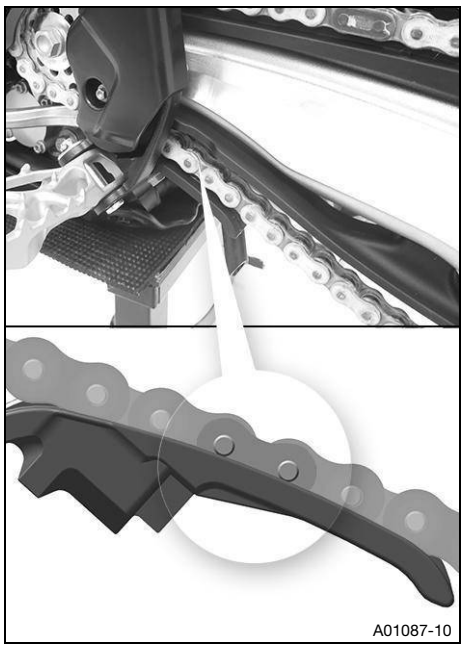

– Check the chain slider for wear.
  » If the lower edge of the chain pins is in line with or below the chain slider:
    – Change the chain slider.
– Check that the chain slider is firmly seated.
  » If the chain slider is loose:
    – Tighten the screws of the chain slider.

Screw, chain slider	
M8	15 Nm (11.1 ft·lb$_f$)

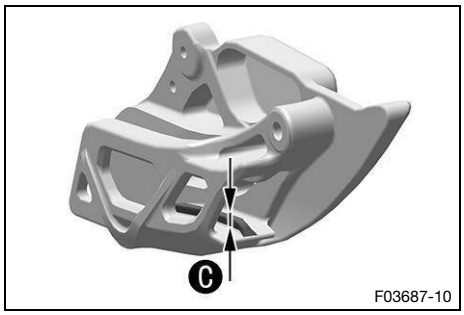

– Check the chain guide with a slide gage for dimension C.

Minimum thickness C of the chain guide	6 mm (0.24 in)

  » If the specifications have not been met:
    – Change the chain guide.

– Check that the chain guide is firmly seated.
  » If the chain guide is loose:
    – Tighten the screws on the chain guide.

Screw, chain guide on swingarm, front	
M6×45	10 Nm (7.4 ft·lb$_f$)
Screw, chain guide on swingarm, rear	
M6×16	10 Nm (7.4 ft·lb$_f$) **Loctite® 243**

Reworking

– Remove the motorcycle from the lift stand. (p. 60)

11.44 Checking the frame

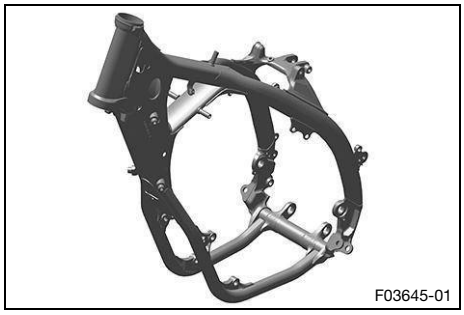
F03645-01

– Check the frame for damage, cracks, and deformation.
  » If the frame shows signs of damage, cracks, or deformation:
    – Change the frame.

    Repairs on the frame are not permitted.

11.45 Checking the swingarm

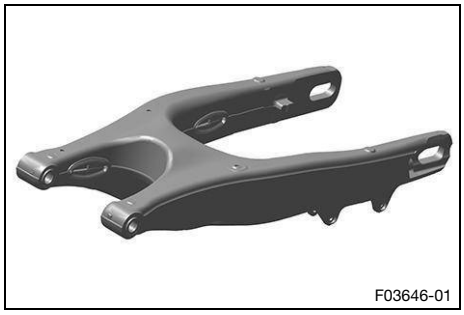
F03646-01

– Check the swingarm for damage, cracks, and deformation.
  » If the swingarm shows signs of damage, cracks, or deformation:
    – Change the swingarm.

    Repairs on the swingarm are not permitted.

11.46 Checking the throttle cable routing

WARNING

Danger of accidents The throttle cable can become kinked, jammed, or blocked if it has been routed incorrectly.

If the throttle cable is kinked, jammed or blocked, the speed can no longer be controlled.

– Make sure that the throttle cable routing and the play in the throttle cable complies with the specification.

Preparatory work

– Remove the seat. (p. 76)
– Remove the fuel tank. (p. 85)

Main work

– Check the throttle cable routing.

Both throttle cables must be routed to the throttle valve body side by side on the back of the handlebars and above the fuel tank roller. Both throttle cables must be secured behind the rubber strap of the fuel tank support.

» If the throttle cable routing is not as specified:
  – Correct the throttle cable routing.

Reworking

– Install the fuel tank. (p. 87)
– Mount the seat. (p. 77)

11.47 Checking the rubber grips

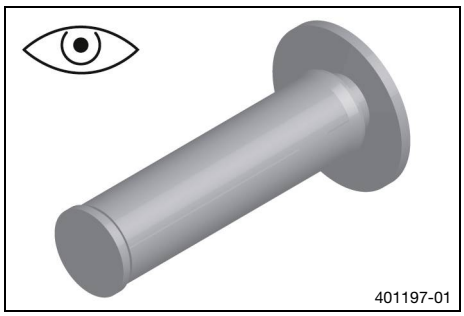

– Check the hand grips on the handlebar for damage, wear, and that they are firmly seated.

Note

The hand grips are vulcanized onto a sleeve on the left and onto the grip tube of the throttle grip on the right. The left sleeve is clamped onto the handlebar.

The hand grip can only be replaced with the sleeve or the gas pipe.

» If a hand grip is damaged or worn:
  – Replace the hand grip.

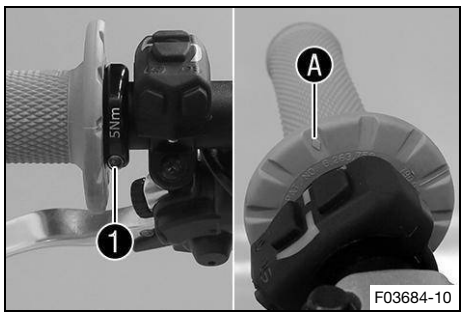

– Check that screw 1 is firmly seated.

Screw, fixed grip	
M4	5 Nm (3.7 ft·lb$_f$) **Loctite® 243**

Diamond A must be positioned visibly as shown in the figure.

11.48 Program the Quickshifter

Note
If the shifting performance of the Quickshifter starts to decrease, it must be reprogrammed.

F03760-12

- Carry out the starting procedure. (p. 33)
- Press and hold the QS button 1 for at least 10 seconds.
  ✓ The QS indicator lamp flashes.
- Pull the clutch lever, engage first gear and press the clutch lever as far down as it will go for at least a second.
- Briefly press the QS button 1.
  ✓ The QS indicator lamp lights up blue, the teaching procedure was successful.

Note
If the quickshifter cannot be activated, the teaching procedure was unsuccessful and must be repeated.

11.49 Adjusting the basic position of the clutch lever

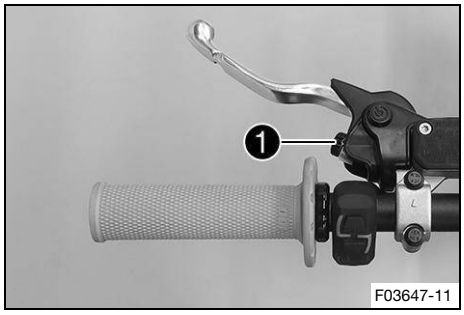

F03647-11

- Adjust the basic position of the clutch lever to your hand size by turning adjusting screw 1.

Only turn the adjusting screw by hand, and do not use force. Do not make any adjustments while riding.

Note
When the adjusting screw is turned counterclockwise, the clutch lever moves closer to the handlebar.
When the adjusting screw is turned clockwise, the clutch lever moves away from the handlebar.
The range of adjustment is limited.

11.50 Checking/correcting the fluid level of hydraulic clutch

WARNING
Health hazard Brake fluid is a harmful substance.
- Keep brake fluid out of the reach of children.
- Wear suitable protective clothing and safety glasses.
- Do not allow brake fluid to come into contact with the skin, the eyes, or clothing.
- Consult a doctor immediately if brake fluid has been ingested.
- Rinse the affected area with plenty of water in the event of contact with the skin.
- Rinse eyes thoroughly with water immediately and consult a doctor if brake fluid comes into contact with the eyes.
- If brake fluid spills on to your clothing, change the clothing.

Note
The fluid level rises with increasing wear of the friction plates.
Avoid contact between brake fluid and painted parts. Brake fluid corrodes paint.

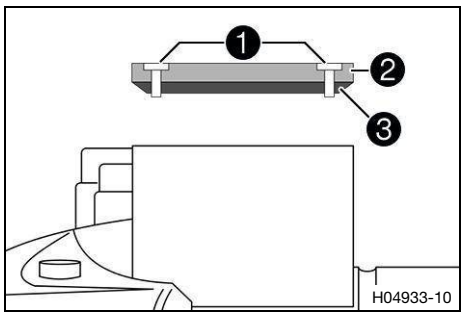

– Move the hydraulic clutch fluid reservoir mounted on the handlebar into a horizontal position.
– Remove ❶ screws.
– Take off cover ❷ with diaphragm ❸.
– Check the fluid level.

Fluid level below reservoir rim	4 mm (0.16 in)

» If the fluid level does not meet the specifications:
  – Correct the fluid level of the hydraulic clutch.

  Brake fluid DOT 5.1 (p. 176)

– Position the cover with diaphragm. Mount and tighten the screws.

Immediately clean up any brake fluid that has overflowed or spilled with water.

11.51 Changing the hydraulic clutch fluid

WARNING
Health hazard Brake fluid is a harmful substance.
– Keep brake fluid out of the reach of children.
– Wear suitable protective clothing and safety glasses.
– Do not allow brake fluid to come into contact with the skin, the eyes, or clothing.
– Consult a doctor immediately if brake fluid has been ingested.
– Rinse the affected area with plenty of water in the event of contact with the skin.
– Rinse eyes thoroughly with water immediately and consult a doctor if brake fluid comes into contact with the eyes.
– If brake fluid spills on to your clothing, change the clothing.

NOTE
Environmental hazard Hazardous substances cause environmental damage.
– Dispose of oils, grease, filters, fuel, cleaning agents, brake fluid, etc. correctly and in accordance with the applicable regulations.

Note
The fluid level rises with increasing wear of the friction plates.
Avoid contact between brake fluid and painted parts. Brake fluid corrodes paint.

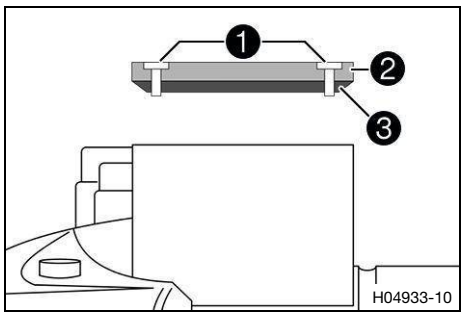

– Move the hydraulic clutch fluid reservoir mounted on the handlebar into a horizontal position.
– Remove screws ❶.
– Take off cover ❷ with membrane ❸.

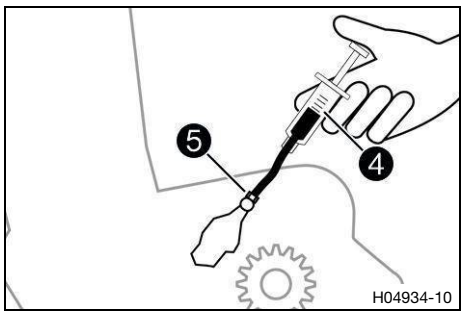

– Fill bleeding syringe ❹.

Syringe (50329050000)
Brake fluid DOT 5.1 (p. 176)

– On the clutch slave cylinder, remove the protection cap and mount bleeding syringe ❹ with an appropriate hose piece on bleeder screw ❺.

Only loosen bleeder screw ❺ on the clutch slave cylinder until filling is possible.
Only use clean brake fluid from a sealed container.

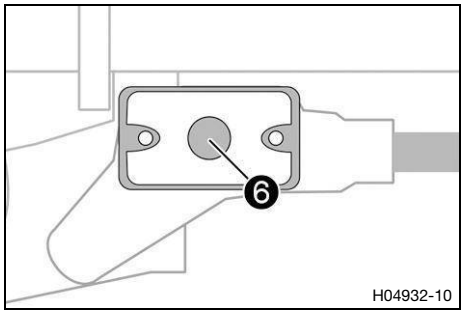

– Inject the liquid into the system until it escapes from bore ❻ of the master cylinder without bubbles.
– Occasionally extract the fluid from the master cylinder reservoir to prevent overflowing.
– Tighten the bleed screw and remove the bleeding syringe with the hose. Mount the protection cap.
– Correct the fluid level of the hydraulic clutch.

Fluid level below reservoir rim	4 mm (0.16 in)

– Position the cover with diaphragm.
– Mount screws and screw in hand-tight.

Immediately clean up any brake fluid that has overflowed or spilled using water.

12.1 Checking the free travel on the hand brake lever

WARNING
Danger of accidents The brake system fails in the event of overheating.
If there is no free travel on the brake lever, pressure builds up in the brake system.
– Set the free travel on the brake lever as specified.

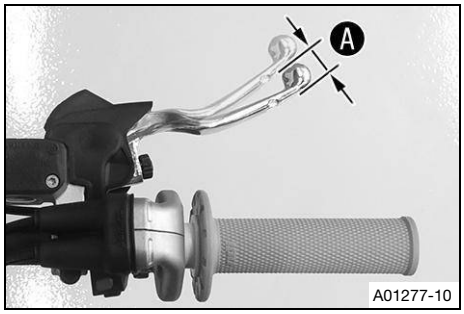

– Push the hand brake lever forward and check free travel Ⓐ.

Free travel of hand brake lever	≥ 3 mm (≥ 0.12 in)

» If the free travel does not meet the specifications:
  – Adjust the basic position of the hand brake lever. (p. 99)

12.2 Adjusting the basic position of the hand brake lever

Preparatory work
– Check the free travel on the hand brake lever. (p. 99)

Main work
– Adjust the basic position of the hand brake lever to your hand size by turning adjusting screw ❶.

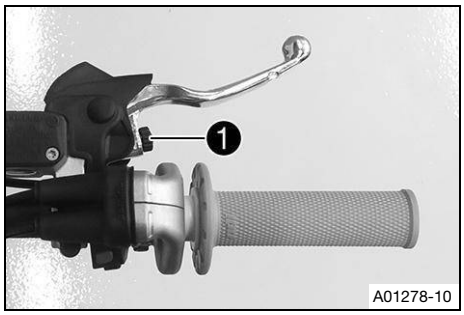

Only turn the adjusting screw by hand, and do not use force.
Do not make any adjustments while riding.

Note
Turn the adjusting screw clockwise to increase the distance between the hand brake lever and the handlebar.
Turn the adjusting screw counterclockwise to decrease the distance between the hand brake lever and the handlebar.
The range of adjustment is limited.

12.3 Checking the brake discs

WARNING
Danger of accidents Worn-out brake discs reduce the braking action.
– Make sure that worn-out brake discs are replaced immediately.

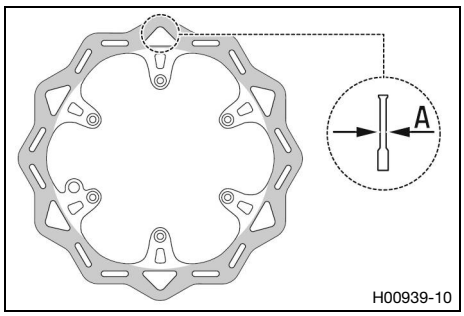

– Check the brake disc thickness of the front and rear brake disc at several places on the disc to see if they conform to measurement Ⓐ.

Brake disc wear limit	
front	2.5 mm (0.098 in)
rear	3.5 mm (0.138 in)

Note
Wear reduces the thickness of the brake discs at the contact surface of the brake pads.

» If the brake disc thickness is less than the specification:
  – Change the brake discs of the front brake.
  – Change the brake discs on the rear brake.

– Check the front and rear brake discs for damage, cracks, and deformation.
  » If the brake disc shows signs of damage, cracks, or deformation:
    – Change the brake discs of the front brake.
    – Change the brake discs on the rear brake.

12.4 Checking the brake fluid level for the front brake

WARNING
Danger of accidents Brake fluid which is too old or of the wrong type impairs the function of the brake system.
– Make sure that brake fluid for the front and rear brake is changed in accordance with the service schedule.
– Make sure that only clean, approved brake fluid from a tightly sealed container is used.

WARNING
Danger of accidents An insufficient brake fluid level will cause the brake system to fail.
If the brake fluid level drops below the specified marking or the specified value, the brake system has a leak or the brake pads are worn down.
– Have the brake system checked and make sure that the problem has been eliminated before the vehicle is used again.

Preparatory work
– Check that the brake pads of the front brake are secured. (p. 102)

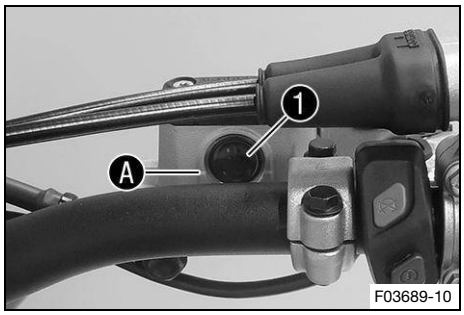

Main work

– Move the brake reservoir mounted on the handlebar to a horizontal position.
– Check the brake fluid level in sight glass ❶.
  » If the brake fluid level has fallen below marking Ⓐ:
    – Add brake fluid for the front brake. (p. 101)

12.5 Adding brake fluid for the front brake

WARNING
Danger of accidents Brake fluid which is too old or of the wrong type impairs the function of the brake system.
– Make sure that brake fluid for the front and rear brake is changed in accordance with the service schedule.
– Make sure that only clean, approved brake fluid from a tightly sealed container is used.

WARNING
Danger of accidents An insufficient brake fluid level will cause the brake system to fail.
If the brake fluid level drops below the specified marking or the specified value, the brake system has a leak or the brake pads are worn down.
– Have the brake system checked and make sure that the problem has been eliminated before the vehicle is used again.

WARNING
Health hazard Brake fluid is a harmful substance.
– Keep brake fluid out of the reach of children.
– Wear suitable protective clothing and safety glasses.
– Do not allow brake fluid to come into contact with the skin, the eyes, or clothing.
– Consult a doctor immediately if brake fluid has been ingested.
– Rinse the affected area with plenty of water in the event of contact with the skin.
– Rinse eyes thoroughly with water immediately and consult a doctor if brake fluid comes into contact with the eyes.
– If brake fluid spills on to your clothing, change the clothing.

NOTE
Environmental hazard Hazardous substances cause environmental damage.
– Dispose of oils, grease, filters, fuel, cleaning agents, brake fluid, etc. correctly and in accordance with the applicable regulations.

Note
Avoid contact between brake fluid and painted parts. Brake fluid corrodes paint.

Preparatory work

– Check that the brake pads of the front brake are secured. (p. 102)

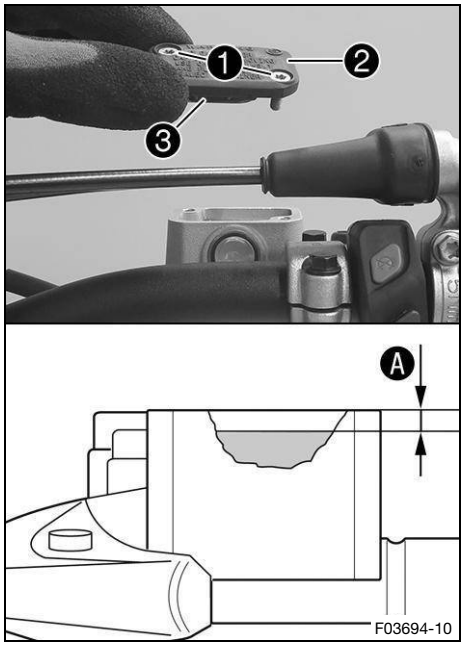

Main work

- Move the brake reservoir mounted on the handlebar to a horizontal position.
- Remove ❶ screws.
- Take off cover ❷ with diaphragm ❸.
- Add brake fluid up to level Ⓐ.

Level Ⓐ (brake fluid level below reservoir rim)	5 mm (0.20 in)

Brake fluid DOT 5.1 (p. 176)

- Position cover ❷ with diaphragm ❸. Mount and tighten screws ❶.

Immediately clean up any brake fluid that has overflowed or spilled with water.

12.6 Checking that the brake pads of the front brake are secured

WARNING
Danger of accidents Worn brake pads reduce the brake action.
- Make sure that worn brake pads are replaced immediately.

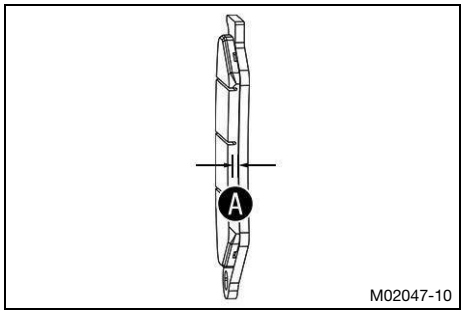

- Check all brake pads on both brake calipers for their lining thickness Ⓐ.

Minimum pad thickness Ⓐ	≥ 1 mm (≥ 0.04 in)

  » If it is less than the minimum thickness:
    - Change the front brake pads. (p. 103)
- Check the brake pads for damage and cracking.
  » If there is damage or cracking:
    - Change the front brake pads. (p. 103)
- Check that the brake pads are secured.
  » If the brake pads are not secured correctly:
    - Secure brake pads, replace with new parts if necessary.

12.7 Changing the brake pads of the front brake

WARNING
Danger of accidents Brake pads which have not been approved alter the braking action.
– Only use brake pads approved and recommended by the vehicle manufacturer.

WARNING
Danger of accidents Incorrect servicing will cause the brake system to fail.
– Ensure that service work and repairs are performed professionally.

WARNING
Danger of accidents Brake fluid which is too old or of the wrong type impairs the function of the brake system.
– Make sure that brake fluid for the front and rear brake is changed in accordance with the service schedule.
– Make sure that only clean, approved brake fluid from a tightly sealed container is used.

WARNING
Danger of accidents Oil, grease or wax on the brake discs reduces the brake action.
– Always keep the brake discs free of oil, fat and wax.
– Clean the brake discs with brake cleaner when necessary.

WARNING
Health hazard Brake fluid is a harmful substance.
– Keep brake fluid out of the reach of children.
– Wear suitable protective clothing and safety glasses.
– Do not allow brake fluid to come into contact with the skin, the eyes, or clothing.
– Consult a doctor immediately if brake fluid has been ingested.
– Rinse the affected area with plenty of water in the event of contact with the skin.
– Rinse eyes thoroughly with water immediately and consult a doctor if brake fluid comes into contact with the eyes.
– If brake fluid spills on to your clothing, change the clothing.

NOTE
Environmental hazard Hazardous substances cause environmental damage.
– Dispose of oils, grease, filters, fuel, cleaning agents, brake fluid, etc. correctly and in accordance with the applicable regulations.

Note
Avoid contact between brake fluid and painted parts. Brake fluid corrodes paint.

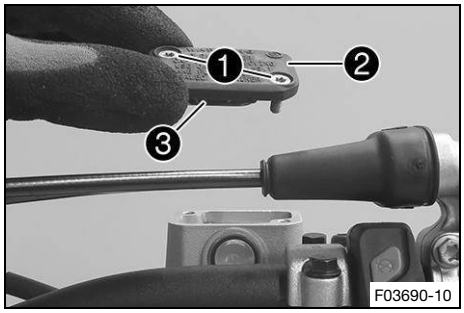

– Move the brake reservoir mounted on the handlebar to a horizontal position.
– Remove screws ❶.
– Take off cover ❷ with diaphragm ❸.

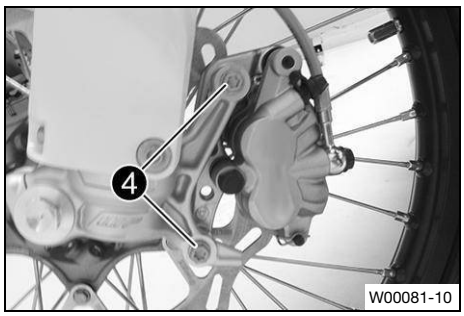

– Remove screws ❹.
– Press the brake pads back by slightly tilting the brake caliper laterally on the brake disc. Carefully pull the brake caliper up and off the brake disc.
– Press the brake piston back to its basic position and make sure that no brake fluid overflows from the brake reservoir, extract some brake fluid if necessary.

Do not operate the hand brake lever if the brake caliper has been removed.

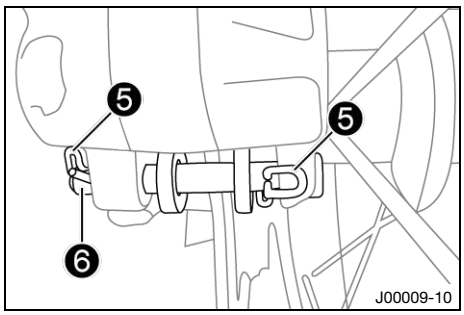

– Remove cotter pin ❺, pull out stud ❻, and remove the brake pads.
– Clean brake caliper and brake caliper support.

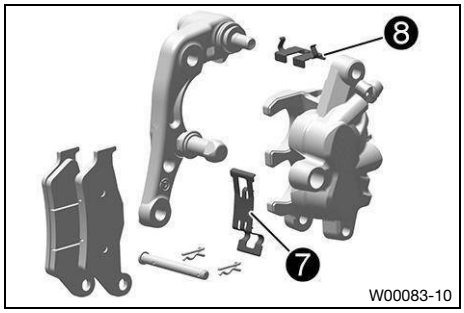

– Check that spring steel clip ❼ in the brake caliper and brake pad guide plate ❽ in the brake caliper support are properly seated.

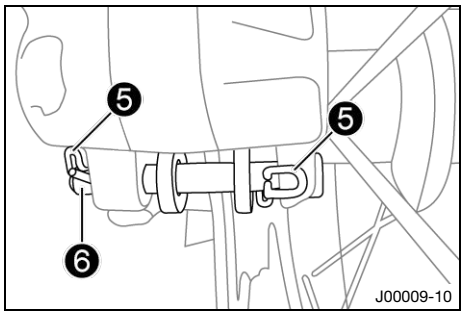

– Insert the new brake pads, mount stud ❻ and cotter pins ❺.

Make sure the brake pads and retaining spring are properly seated.
Mount the outer cotter pins from the front to the rear.
Mount the inner cotter pins from the rear to the front.
Always replace brake pads in sets.

Tip
To make it easier to mount the stud, push the brake pads upward against the retaining spring.

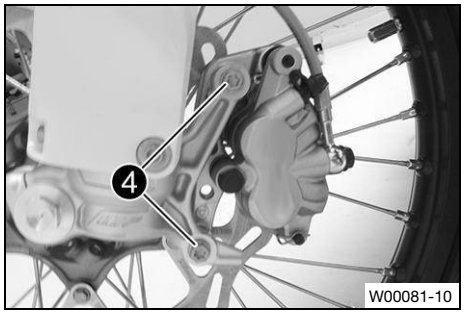

– Position the brake caliper.
– Mount and tighten screws ❹.

Screw, front brake caliper	
M8	25 Nm (18.4 ft·lb_f) **Loctite® 243**

– Operate the hand brake lever repeatedly until the brake pads are in contact with the brake disc and a pressure point is reached.

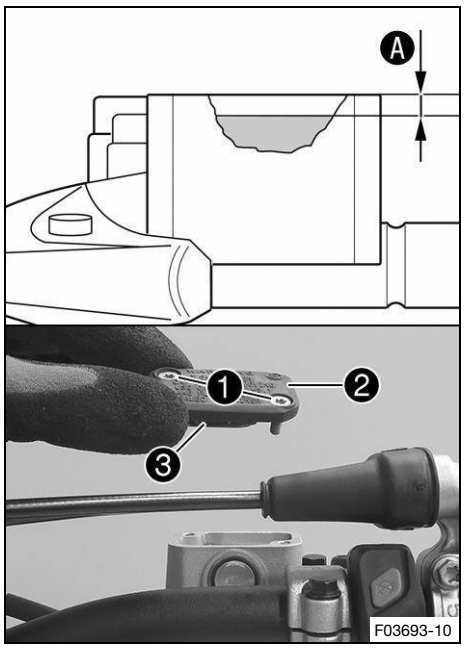

– Add brake fluid to level A.

Level A (brake fluid level below reservoir rim)	5 mm (0.20 in)

Brake fluid DOT 5.1 (p. 176)

– Position cover 2 with diaphragm 3.
– Mount and tighten screws 1.

Immediately clean up any brake fluid that has overflowed or spilled with water.

12.8 Checking the free travel of the brake pedal

WARNING
Danger of accidents The brake system fails in the event of overheating.
If there is no free travel on the brake lever, pressure builds up in the brake system.
– Set the free travel on the brake lever as specified.

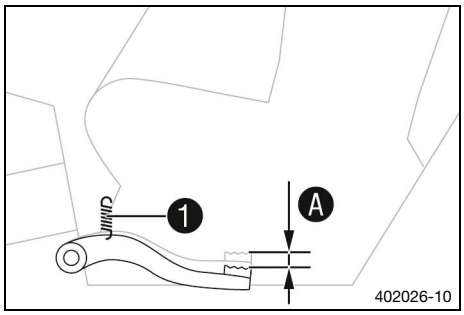

– Detach spring 1.
– Move the brake pedal back and forth between the end stop and the brake pedal cylinder piston actuation and check free travel A.

Free travel of brake pedal	3 mm … 5 mm (0.12 in … 0.20 in)

» If the free travel does not meet the specifications:
  – Adjust the basic position of the brake pedal. (p. 105)
– Attach spring 1.

12.9 Adjusting the basic position of the brake pedal

WARNING
Danger of accidents The brake system fails in the event of overheating.
If there is no free travel on the brake lever, pressure builds up in the brake system.
– Set the free travel on the brake lever as specified.

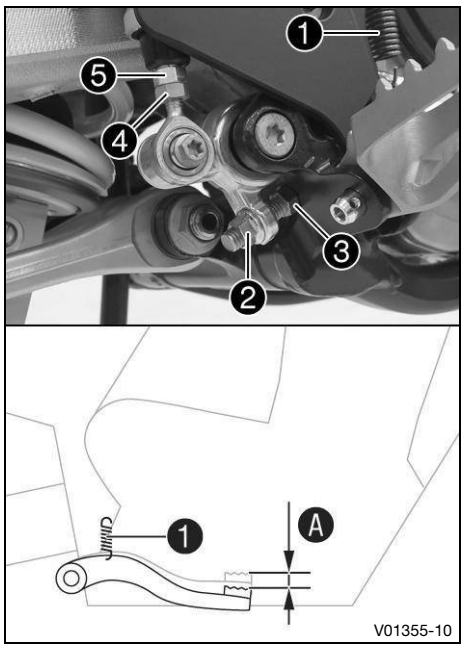

– Detach spring ❶.
– Loosen nut ❹ and unscrew it with push rod ❺ until you have maximum free travel.
– To adjust the basic position of the brake pedal to individual requirements, loosen nut ❷ and turn screw ❸ accordingly.

Note
The range of adjustment is limited.

– Turn push rod ❺ accordingly until you have free travel Ⓐ. If necessary, adjust the basic position of the brake pedal.

Free travel of brake pedal	3 mm … 5 mm (0.12 in … 0.20 in)

– Hold push rod ❺ and tighten nut ❹.

Remaining nuts on chassis	
M6	10 Nm (7.4 ft·lb$_f$)

– Hold screw ❸ and tighten nut ❷.

Brake pedal stop nut	
M8	20 Nm (14.8 ft·lb$_f$)

– Attach spring ❶.

12.10 Checking the brake fluid level for the rear brake

WARNING
Danger of accidents Brake fluid which is too old or of the wrong type impairs the function of the brake system.
– Make sure that brake fluid for the front and rear brake is changed in accordance with the service schedule.
– Make sure that only clean, approved brake fluid from a tightly sealed container is used.

WARNING
Danger of accidents An insufficient brake fluid level will cause the brake system to fail.
If the brake fluid level drops below the specified marking or the specified value, the brake system has a leak or the brake pads are worn down.
– Have the brake system checked and make sure that the problem has been eliminated before the vehicle is used again.

Preparatory work
– Check that the brake pads of the rear brake are secured. (p. 108)

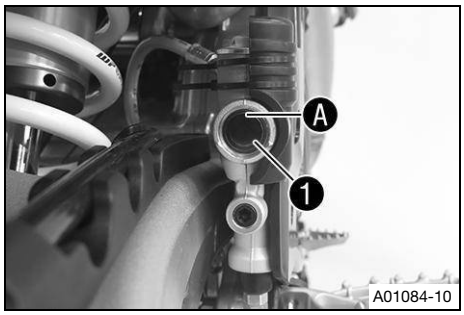

Main work

– Stand the vehicle upright.
– Check the brake fluid level in sight glass ❶.
  » If the brake fluid level has fallen below marking Ⓐ:
    – Add brake fluid for the rear brake. (p. 107)

12.11 Adding brake fluid for the rear brake

WARNING
Danger of accidents Brake fluid which is too old or of the wrong type impairs the function of the brake system.
– Make sure that brake fluid for the front and rear brake is changed in accordance with the service schedule.
– Make sure that only clean, approved brake fluid from a tightly sealed container is used.

WARNING
Danger of accidents An insufficient brake fluid level will cause the brake system to fail.
If the brake fluid level drops below the specified marking or the specified value, the brake system has a leak or the brake pads are worn down.
– Have the brake system checked and make sure that the problem has been eliminated before the vehicle is used again.

WARNING
Health hazard Brake fluid is a harmful substance.
– Keep brake fluid out of the reach of children.
– Wear suitable protective clothing and safety glasses.
– Do not allow brake fluid to come into contact with the skin, the eyes, or clothing.
– Consult a doctor immediately if brake fluid has been ingested.
– Rinse the affected area with plenty of water in the event of contact with the skin.
– Rinse eyes thoroughly with water immediately and consult a doctor if brake fluid comes into contact with the eyes.
– If brake fluid spills on to your clothing, change the clothing.

NOTE
Environmental hazard Hazardous substances cause environmental damage.
– Dispose of oils, grease, filters, fuel, cleaning agents, brake fluid, etc. correctly and in accordance with the applicable regulations.

Note
Avoid contact between brake fluid and painted parts. Brake fluid corrodes paint.

Preparatory work

– Check that the brake pads of the rear brake are secured. (p. 108)
– Remove the frame protector. (p. 63)

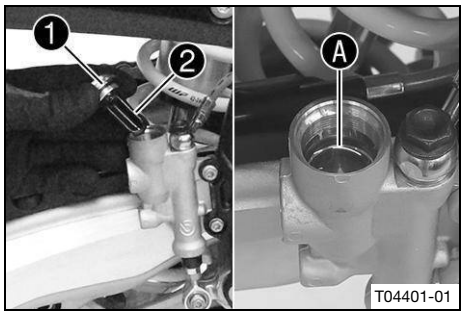

Main work

– Stand the vehicle upright.
– Remove screw cap ❶ with diaphragm ❷ and the O-ring.
– Add brake fluid to mark Ⓐ.

Brake fluid DOT 5.1 (p. 176)

– Mount and tighten the screw cap with the membrane and O-ring.

Immediately clean up any brake fluid that has overflowed or spilled using water.

Reworking

– Install the frame protector. (p. 63)

12.12 Checking that the brake pads of the rear brake are secured

WARNING
Danger of accidents Worn brake pads reduce the brake action.
– Make sure that worn brake pads are replaced immediately.

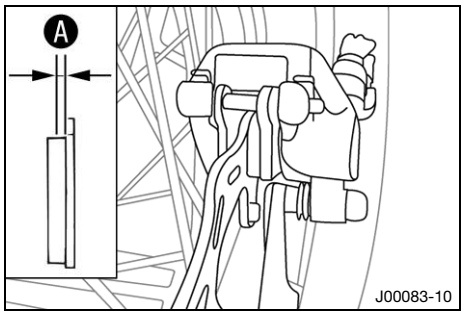

– Check all brake pads on both brake calipers for their lining thickness Ⓐ.

Minimum pad thickness Ⓐ	≥ 1 mm (≥ 0.04 in)

» If it is less than the minimum thickness:
  – Change the rear brake pads. (p. 108)
– Check the brake pads for damage and cracking.
» If there is damage or cracking:
  – Change the rear brake pads. (p. 108)
– Check that the brake pads are secured.
» If the brake pads are not secured correctly:
  – Secure brake pads, replace with new parts if necessary.

12.13 Changing the rear brake pads

WARNING
Danger of accidents Brake pads which have not been approved alter the braking action.
– Only use brake pads approved and recommended by the vehicle manufacturer.

WARNING
Danger of accidents Incorrect servicing will cause the brake system to fail.
– Ensure that service work and repairs are performed professionally.

WARNING

Danger of accidents Brake fluid which is too old or of the wrong type impairs the function of the brake system.

– Make sure that brake fluid for the front and rear brake is changed in accordance with the service schedule.
– Make sure that only clean, approved brake fluid from a tightly sealed container is used.

WARNING

Danger of accidents Oil, grease or wax on the brake discs reduces the brake action.

– Always keep the brake discs free of oil, fat and wax.
– Clean the brake discs with brake cleaner when necessary.

WARNING

Health hazard Brake fluid is a harmful substance.

– Keep brake fluid out of the reach of children.
– Wear suitable protective clothing and safety glasses.
– Do not allow brake fluid to come into contact with the skin, the eyes, or clothing.
– Consult a doctor immediately if brake fluid has been ingested.
– Rinse the affected area with plenty of water in the event of contact with the skin.
– Rinse eyes thoroughly with water immediately and consult a doctor if brake fluid comes into contact with the eyes.
– If brake fluid spills on to your clothing, change the clothing.

NOTE

Environmental hazard Hazardous substances cause environmental damage.

– Dispose of oils, grease, filters, fuel, cleaning agents, brake fluid, etc. correctly and in accordance with the applicable regulations.

Note

Avoid contact between brake fluid and painted parts. Brake fluid corrodes paint.

Preparatory work

– Remove the frame protector. (p. 63)

Main work

– Stand the vehicle upright.
– Remove screw cap ❶ with membrane ❷ and the O-ring Ⓐ.

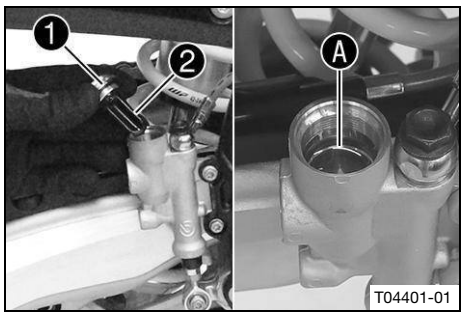

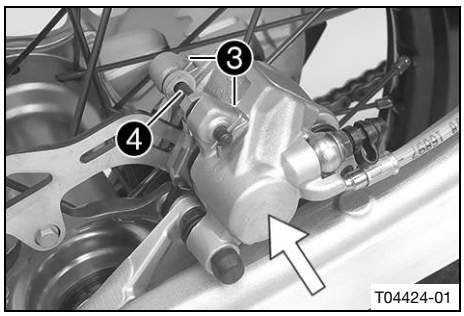

– Manually press the brake caliper toward the brake disc to push back the brake piston. Ensure that brake fluid does not flow out of the brake reservoir, and siphon off excess if required.
– Remove cotter pin ❸, pull out stud ❹, and remove the brake pads.
– Clean brake caliper and brake caliper support.

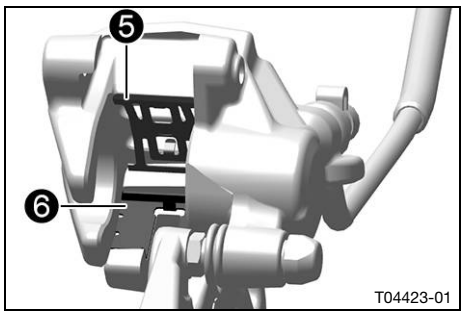

– Check that spring steel clip ❺ in the brake caliper and brake pad guide plate ❻ in the brake caliper support are properly seated.

The arrow on the spring steel clip points in the rotation direction of the brake disc.

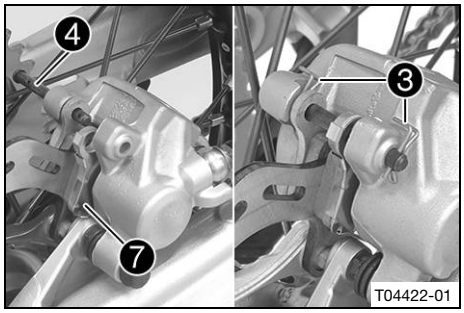

– Insert the new brake pads, mount stud ❹ and cotter pins ❸.

Always replace brake pads in sets.
Make sure that decoupling plate ❼ is mounted on the piston side of the brake pad.

– Actuate the brake disc repeatedly until the brake pads are in contact with the brake disc and a pressure point is achieved.

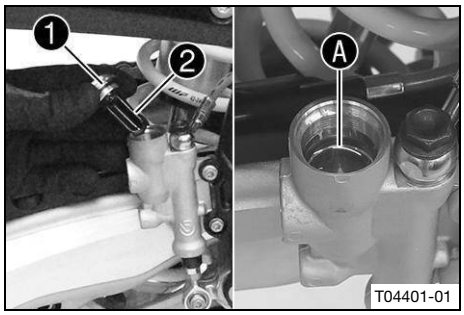

– Correct the brake fluid level to mark Ⓐ.

Brake fluid DOT 5.1 (p. 176)

– Mount and tighten screw cap ❶ with diaphragm ❷ and the O-ring.

Immediately clean up any brake fluid that has overflowed or spilled using water.

Reworking

– Install the frame protector. (p. 63)

13.1 Removing the front wheel

Preparatory work

– Raise the motorcycle with a lift stand. (p. 60)

Main work

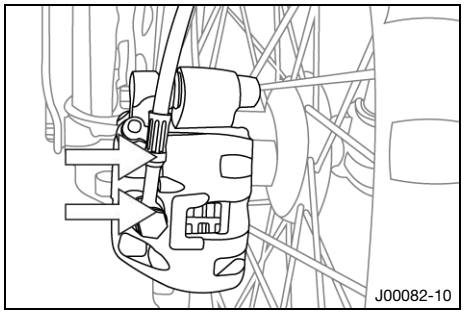

– Manually press the brake caliper toward the brake disc to push back the brake pistons.

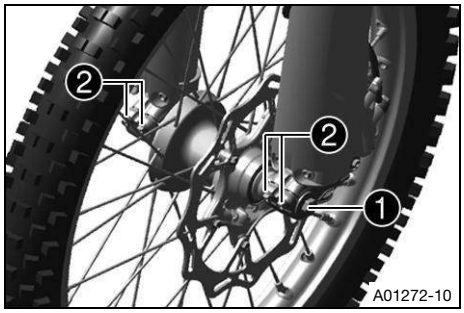

– Loosen screw ❶ by four turns.
– Loosen screws ❷.
– Press on screw ❶ to push the wheel spindle out of the fork shoe.
– Remove screw ❶.

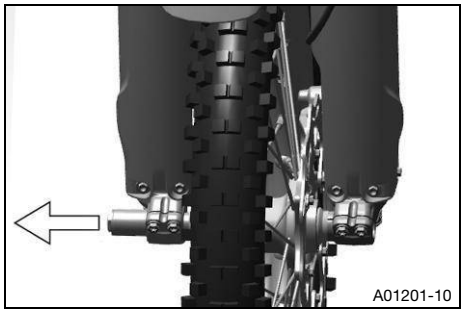

WARNING

Danger of accidents Damaged brake discs reduce the braking action.

– Always lay the wheel down in such a way that the brake disc is not damaged.

– Hold front wheel and remove wheel spindle. Take the front wheel out of the fork.

> Do not actuate the hand brake lever when the front wheel is removed.

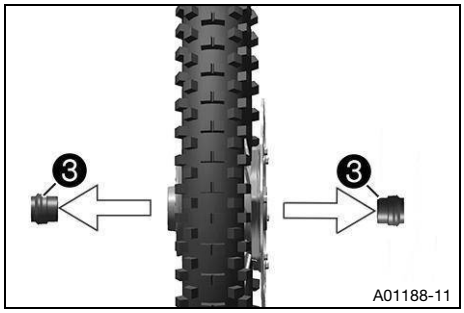

– Remove spacers ❸.

13.2 Installing the front wheel

WARNING

Danger of accidents Oil, grease or wax on the brake discs reduces the brake action.

– Always keep the brake discs free of oil, fat and wax.
– Clean the brake discs with brake cleaner when necessary.

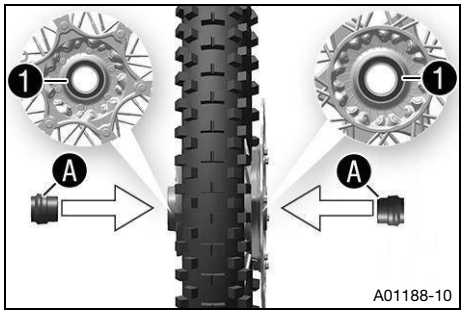

– Check the wheel bearing for damage and wear.
  » If the wheel bearing is damaged or worn:
    – Change the front wheel bearing.
– Clean and grease radial shaft seal ❶ and contact surfaces Ⓐ on the spacers.

Long-life grease (p. 175)

– Insert spacers.
– Clean and lightly grease the wheel spindle.

Long-life grease (p. 175)

– Position the front wheel and insert the wheel spindle.
  ✓ The brake pads are positioned correctly.

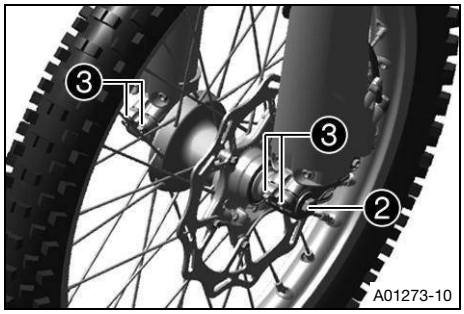

– Mount and tighten screw ❷.

Screw, wheel spindle, front	
M20×1.5	35 Nm (25.8 ft·lb$_f$)

– Operate the hand brake lever several times until the brake pads are in contact with the brake disc.
– Remove the motorcycle from the lift stand. (p. 60)
– Operate the front brake and compress the fork a few times firmly.
  ✓ The fork legs straighten.
– Tighten screws ❸.

Screw, fork shoe	
M8	15 Nm (11.1 ft·lb$_f$)

13.3 Removing the rear wheel

Preparatory work

– Raise the motorcycle with a lift stand. (p. 60)

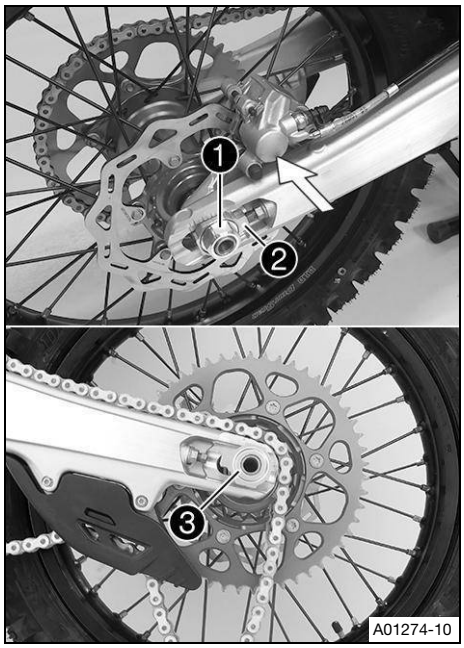

Main work

- Manually press the brake caliper toward the brake disc to push back the brake pistons.
- Remove nut ❶.
- Remove chain tension adjuster ❷. Pull out wheel spindle ❸ far enough to allow the rear wheel to be pushed forward.
- Push the rear wheel forward as far as possible. Remove the chain from the rear sprocket.

> Protect the components against damage by covering them.

> **WARNING**
> **Danger of accidents** Damaged brake discs reduce the braking action.
> – Always lay the wheel down in such a way that the brake disc is not damaged.

- Hold the rear wheel and remove wheel spindle. Take the rear wheel out of the swingarm.

> Do not actuate the brake pedal when the rear wheel is removed.

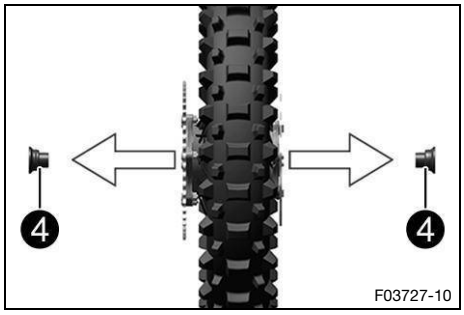

- Remove spacers ❹.

13.4 Installing the rear wheel

> **WARNING**
> **Danger of accidents** Oil, grease or wax on the brake discs reduces the brake action.
> – Always keep the brake discs free of oil, fat and wax.
> – Clean the brake discs with brake cleaner when necessary.

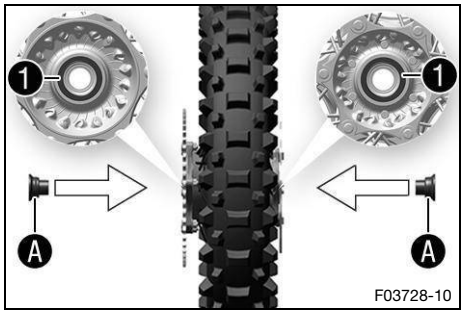

Main work

- Check the wheel bearing for damage and wear.
  » If the wheel bearing is damaged or worn:
    – Change the rear wheel bearing.
- Clean and grease radial shaft seal ❶ and contact surfaces Ⓐ on the spacers.

> Long-life grease (p. 175)

- Insert spacers.

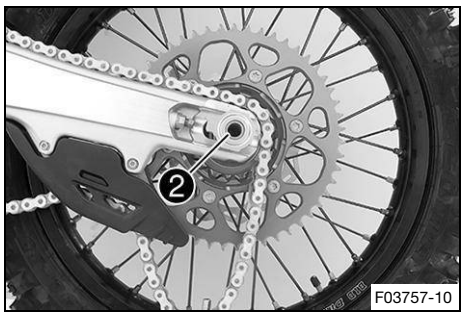

– Clean and lightly grease the wheel spindle.

Long-life grease (p. 175)

– Position rear wheel and insert wheel spindle ❷.
✓ The brake pads are positioned correctly.
– Attach the chain.

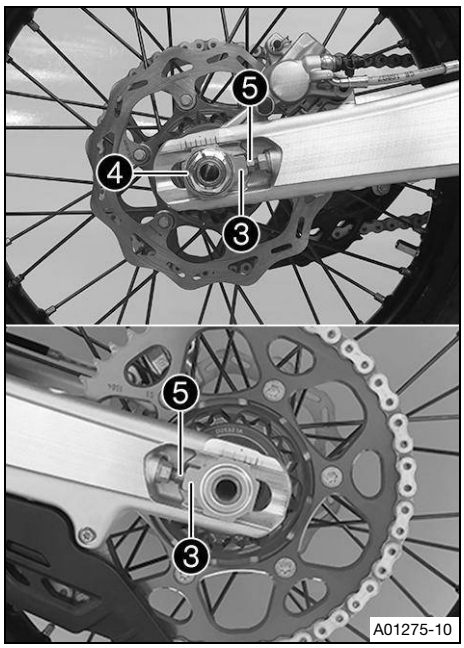

– Position chain adjuster ❸.
– Mount nut ❹ but do not tighten yet.
– Make sure that chain adjusters ❸ are fitted correctly on adjusting screws ❺.
– Check the chain tension. (p. 90)
– Tighten nut ❹.

Nut, wheel spindle, rear	
M22×1.5	80 Nm (59.0 ft·lb_f)

Note
The wide adjustment range of the chain adjusters enables different secondary ratios with the same chain length.
Chain adjusters ❸ can be turned by 180°.

– Actuate the brake disc repeatedly until the brake pads are in contact with the brake disc and a pressure point is achieved.

Reworking
– Remove the motorcycle from the lift stand. (p. 60)

13.5 Checking the tire condition

Note
Only mount tires approved and/or recommended by Husqvarna Mobility.
Other tires could have a negative effect on handling characteristics.
The type, condition, and pressure of the tires all have a major impact on the handling of the motorcycle.
The tires mounted on the front and rear wheels must have a similar profile.
Worn tires have a negative effect on handling characteristics, especially on wet surfaces.

Preparatory work
– Raise the motorcycle with a lift stand. (p. 60)

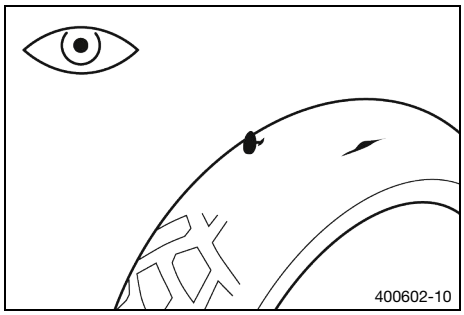

Main work

– Check the front and rear tires for cuts, embedded objects, and other damage.
  » If the tires have cuts, run-in objects, or other damage:
    – Change the tires.

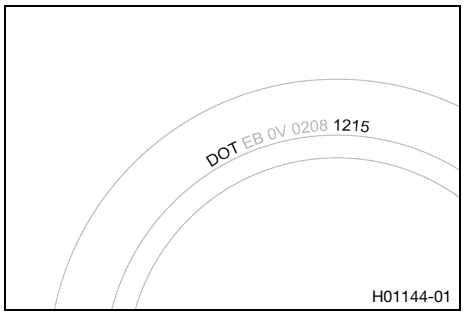

– Check the tire age.

> **Note**
> The tire date of manufacture is usually contained in the tire label and is indicated by the last four digits of the **DOT** number. The first two digits indicate the week of manufacture and the last two digits the year of manufacture.
> We recommend that the tires be changed after five years at the latest, regardless of the actual wear.

  » If the tires are older than five years:
    – Change the tires.

Reworking

– Remove the motorcycle from the lift stand. (p. 60)

13.6 Checking the tire pressure

> **Note**
> Low tire pressure leads to abnormal wear and the tire overheating.
> Correct tire pressure ensures optimal riding comfort and maximum tire service life.

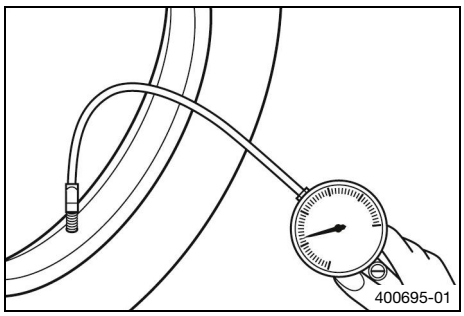

– Remove the protection cap.
– Check the tire pressure when the tires are cold.

Off-road tire pressure	
front	1.0 bar (14.5 psi)
rear	1.0 bar (14.5 psi)

  » If the tire pressure does not meet specifications:
    – Correct tire pressure.
– Mount the protection cap.

13.7 Checking the spoke tension

WARNING

Danger of accidents Incorrectly tensioned spokes impair the handling characteristic and can result in secondary damage.

If the spokes are too tight, they can break due to being overloaded.

Loose spokes can cause lateral or radial run-out in the wheel and other spokes will loosen as a result.

– Check the spoke tension regularly, especially on a new vehicle.

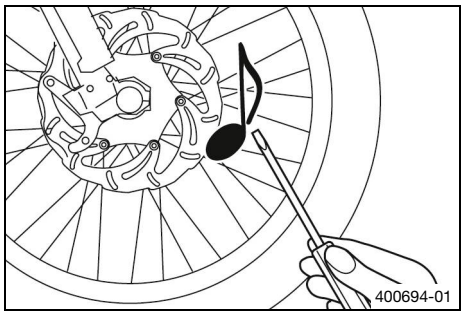

– Briefly tap each spoke with a screwdriver.

You should hear a high-pitched sound.

Note

The frequency of the sound depends on the spoke length and spoke diameter.

If spokes of the same length and diameter vibrate with a different tone, this is an indication that the spoke tensions differ.

» If the spoke tension differs:

  – Correct the spoke tension.

– Check the spoke torque.

Spoke nipple, front wheel	
M4,5	6 Nm (4.4 ft·lb$_f$)
Spoke nipple, rear wheel	
M4,5	6 Nm (4.4 ft·lb$_f$)

Torque wrench kit (58429094000)

14.1 Removing the 12 V battery

WARNING

Risk of injury 12-V batteries contain harmful substances.

- Keep 12-V batteries out of the reach of children.
- Keep the battery away from sparks or open flames.
- Only charge batteries in well-ventilated rooms.
- Maintain a minimum distance from flammable materials when charging 12-V batteries.

Minimum distance	1 m (3 ft – 3 in)

- Do not charge deeply discharged 12- V batteries if the charge is already below the minimum voltage.

Minimum voltage before starting charging	9 V

- Dispose of 12 V batteries correctly if they have less than the minimum voltage.

CAUTION

Danger of burns The regulator rectifier gets very hot when the vehicle is operated.

- Allow the regulator rectifier to cool down before performing any work.

NOTE

Environmental hazard 12-V batteries contain environmentally-hazardous materials.

- Do not dispose of 12-V batteries as household waste.
- Dispose of 12-V batteries at a collection point for used batteries.

Preparatory work

- Remove the seat. (p. 76)

Main work

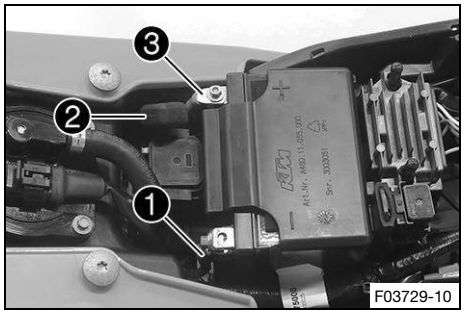

- Disconnect negative cable ❶ from the 12 V battery.
- Pull back positive terminal cover ❷ and disconnect positive cable ❸ from the 12-V battery.

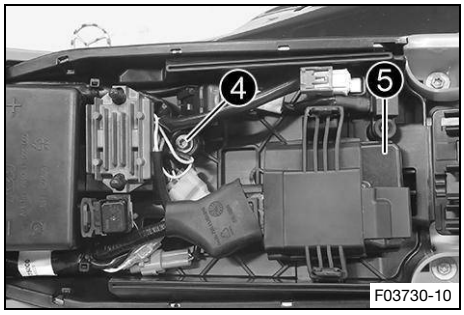

- Remove screw ❹.
- Pull off engine control unit ❺ from the holder and hang to the side.

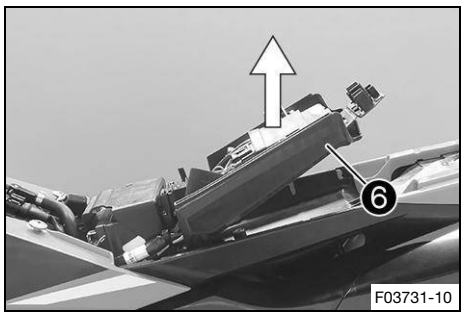

– Pull up battery holding bracket ❻ and remove the 12-V battery to the rear.

Pay attention to the wiring harness.

14.2 Installing the 12 V battery

Main work

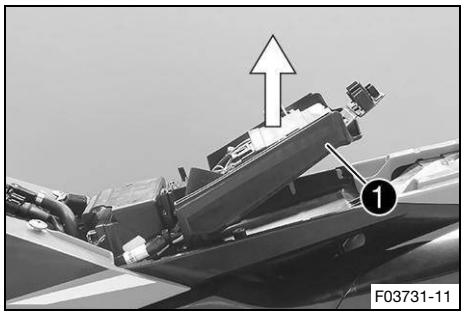

– Pull up battery holding bracket ❶, insert the 12-V battery into the battery compartment with the terminals facing upwards and secure with battery holding bracket ❶.

Ensure that the cable is routed correctly.

12-V battery (HJTZ5S-FP-C) (p. 177)

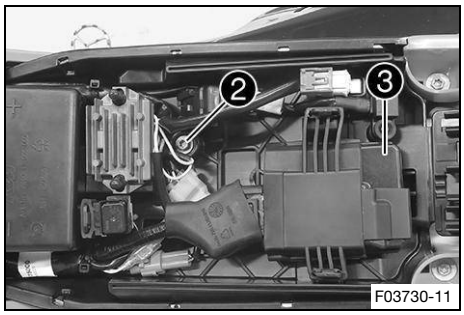

– Mount and tighten screw ❷.

Remaining screws on chassis	
M6	10 Nm (7.4 ft·lb$_f$)

– Attach the engine control unit ❸ to the holder.

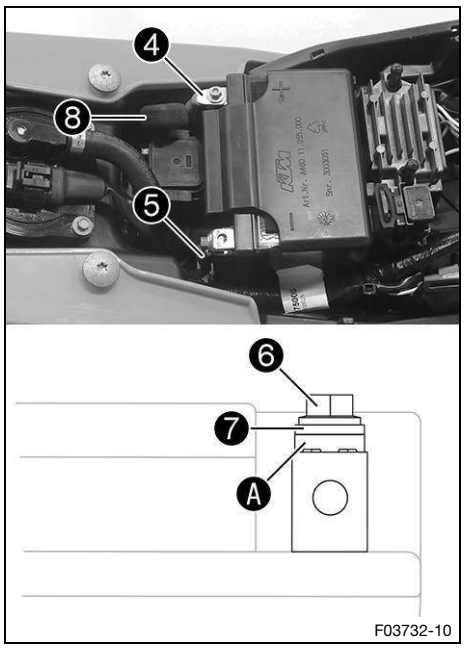

– Connect positive cable ❹ to the 12 V battery.

Screw, battery terminal	
M5	2.5 Nm (1.84 ft·lb$_f$)

– Connect negative cable ❺ to the 12 V battery.

Screw, battery terminal	
M5	2.5 Nm (1.84 ft·lb$_f$)

Contact disks Ⓐ must be mounted under screws ❻ and cable lug ❼ with the claws toward the battery terminal.

– Slide positive terminal cover ❽ over the positive terminal.

Reworking

– Mount the seat. (p. 77)

14.3 Charging the 12 V battery

WARNING

Risk of injury 12-V batteries contain harmful substances.

– Keep 12-V batteries out of the reach of children.
– Keep the battery away from sparks or open flames.
– Only charge batteries in well-ventilated rooms.
– Maintain a minimum distance from flammable materials when charging 12-V batteries.

Minimum distance	1 m (3 ft – 3 in)

– Do not charge deeply discharged 12- V batteries if the charge is already below the minimum voltage.

Minimum voltage before starting charging	9 V

– Dispose of 12 V batteries correctly if they have less than the minimum voltage.

NOTE

Environmental hazard 12-V batteries contain environmentally-hazardous materials.

– Do not dispose of 12-V batteries as household waste.
– Dispose of 12-V batteries at a collection point for used batteries.

Note

Even when there is no load on the 12 V battery, it discharges steadily each day.
The state of charge and the method of charging are very important for the service life of the 12 V battery.
Rapid recharging with a high charging current shortens the service life of the battery.
If the charging current, charging voltage, or charging time is exceeded, the 12 V battery will be destroyed.

If the 12 V battery is left in a discharged state for an extended period, it will become deeply discharged and suffer a loss of capacity, destroying the battery.

The 12 V battery is maintenance-free.

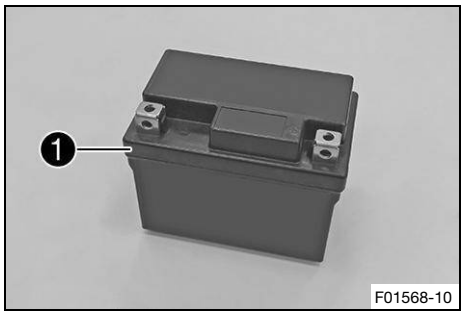

Preparatory work

– Remove the seat. (p. 76)
– Remove the 12 V battery. (p. 117)

Main work

– Do not remove cover 1.
– Check the battery voltage.
  » Battery voltage:
    • < 9 V
    – Do not charge the 12 V battery.
    – Replace the 12 V battery and dispose of the old 12 V battery properly.
  » If the specifications have been met:
    Battery voltage:
    • ≥ 9 V
    – Connect a charger to the 12 V battery. Switch the charger on.

Read the accompanying instructions.	
The charging current, charging voltage, and charging time must not be exceeded.	
Maximum charging voltage	14.4 V
Minimum charging voltage	3.0 A
Maximum charging time	12 h
Recharge the 12 V battery regularly when the motorcycle is not being used.	3 months
If the 12 V battery is depleted from starting the vehicle repeatedly, the battery must be charged immediately.	

Work material (Alternative 1 / 2)
Battery charger (26529974000)
Work material (Alternative 2 / 2)
(US) battery charger (26529974500)

Note

This charger tests whether the 12 V battery retains its voltage. It is also impossible to overcharge the 12 V battery with this charger. The charging time may be longer at low temperatures.

These chargers are only suitable for lithium iron phosphate batteries.

    – Switch off the charger after charging and disconnect from the 12 V battery.

Reworking

– Install the 12 V battery. (p. 118)
– Mount the seat. (p. 77)

14.4 Changing the main fuse

WARNING

Fire hazard Incorrect fuses overload the electrical system.

– Use only fuses with the prescribed amperage.
– Do not bypass or repair fuses.

CAUTION

Danger of burns The regulator rectifier gets very hot when the vehicle is operated.

– Allow the regulator rectifier to cool down before performing any work.

Note

The main fuse protects all electrical power loads of the vehicle. The main fuse is located in the starter relay housing under the seat.

Preparatory work

– Remove the seat. (p. 76)
– Remove the fuel tank. (p. 85)

Main work

– Pull starter relay ❶ off of the bracket.

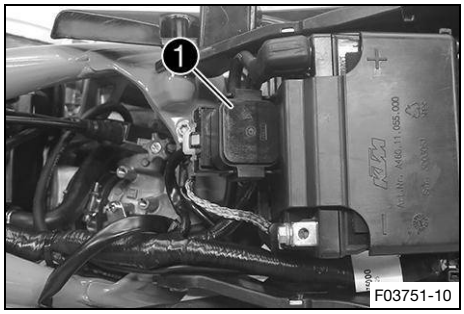

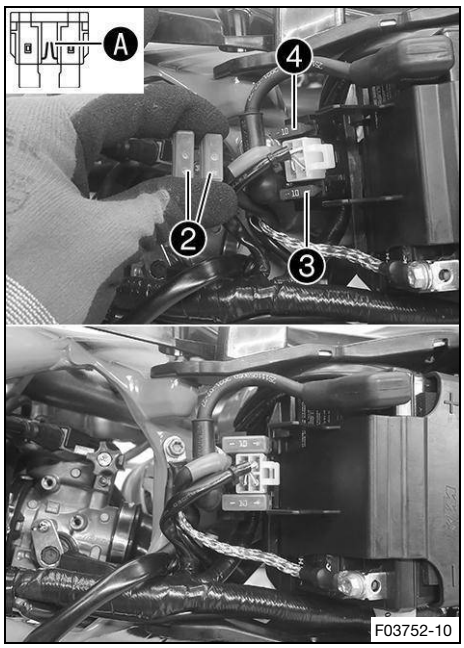

– Remove protection caps ❷.
– Remove faulty main fuse ❸.

Note
A faulty fuse has a burned-out fuse wire Ⓐ.
A spare fuse ❹ is located in the starter relay.

– Insert the main fuse.

Fuse (58011109110) (p. 177)

– Check that the electrical equipment is functioning properly.

Tip
Insert a new spare fuse so that it is available if needed.

– Mount the protection caps.
– Mount the starter relay onto the holder and route the cable.

Reworking
– Install the fuel tank. (p. 87)
– Mount the seat. (p. 77)

14.5 Changing the fuse of the fuel pump

WARNING
Fire hazard Incorrect fuses overload the electrical system.
– Use only fuses with the prescribed amperage.
– Do not bypass or repair fuses.

CAUTION
Danger of burns The regulator rectifier gets very hot when the vehicle is operated.
– Allow the regulator rectifier to cool down before performing any work.

Note
The fuel pump is protected by the fuel pump fuse. This is located under the seat.

Preparatory work
– Remove the seat. (p. 76)

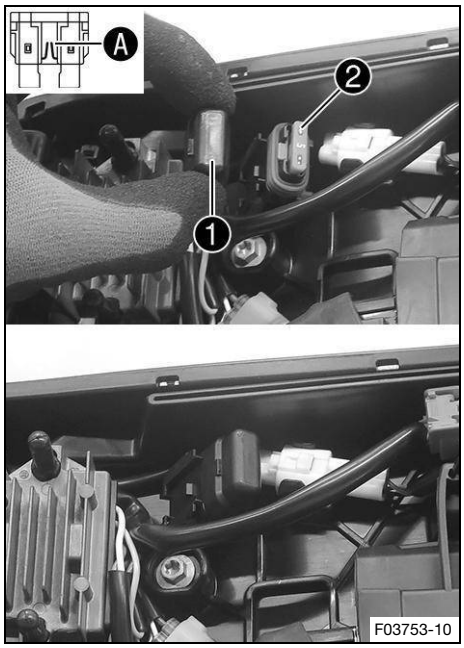

Main work

– Remove protection cap ❶.
– Remove faulty main fuse ❷.

> **Note**
> A faulty fuse has a burned-out fuse wire Ⓐ.

– Put in the new fuse for the fuel pump.

Fuse (58011109105) (p. 177)

– Check that the electrical equipment is functioning properly.
– Attach the protection cap.

Reworking

– Mount the seat. (p. 77)

14.6 Diagnostic connector

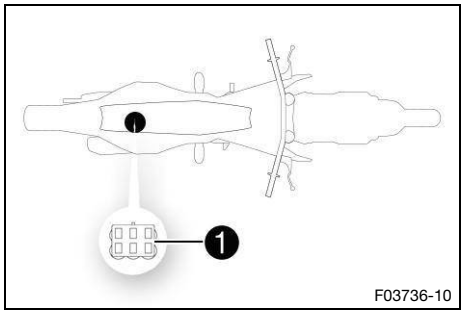

Diagnostics connector ❶ is located under the seat.

> **Note**
> As soon as the diagnostics tool is connected, the hourmeter starts running.
> Before longer diagnostic sessions, unplug the hourmeter behind the number plate.

15.1 Cooling system

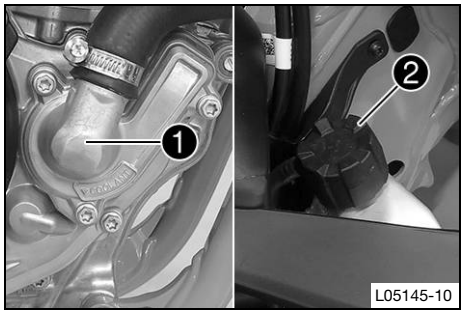

Water pump ❶ in the engine circulates the coolant.
The pressure resulting from the warming of the cooling system is regulated by a valve in radiator cap ❷.
The coolant is cooled by the air stream.
The lower the vehicle speed, the lower the cooling effect. Dirty cooling fins also reduce the cooling effect.

15.2 Checking the frost protection and coolant level

WARNING
Health hazard Coolant is harmful to health.
- Keep coolant out of the reach of children.
- Do not allow coolant to come into contact with skin, eyes, or clothing.
- Consult a doctor immediately if coolant has been ingested.
- Rinse the affected area immediately with plenty of water in the event of contact with skin.
- Rinse eyes thoroughly with water and consult a doctor immediately if coolant comes into contact with eyes.
- If coolant spills on to your clothing, change the clothing.
- Store coolant properly in a suitable container and keep out of the reach of children.

WARNING
Danger of scalding The coolant heats up and is under high pressure when the vehicle is operated.
- Do not open the radiator, the radiator hoses, or other cooling system components if the engine or the cooling system are at operating temperature.
- Allow the cooling system and the engine to cool down before you open the radiator, the radiator hoses, or other components of the cooling system.
- In the event of scalding, rinse the area affected immediately with lukewarm water.

Condition: The engine is cold

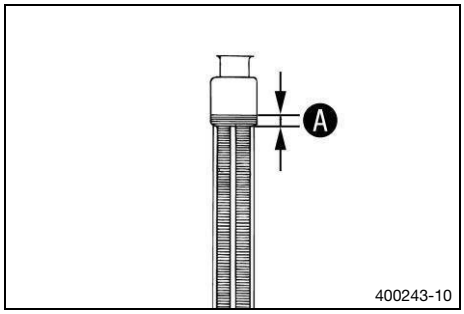

- Stand the motorcycle upright on a level surface.
- Take off the radiator cap.
- Check the frost protection in the coolant.

−45 °C … −25 °C (−49.0 °F … −13.0 °F)

  » If the frost protection in the coolant does not match the specified value:
    - Correct the frost protection in the coolant.
- Check the coolant level in the radiator.

Coolant level Ⓐ above the radiator fins	10 mm (0.39 in)

» If the coolant level does not meet the specifications:
– Correct the coolant level.

coolant	
Coolant (p. 176) Antifreeze protection to at least: −25 °C (−13.0 °F)	0.95 l (0.251 liq. gal_{US})

– Mount the radiator cap.

15.3 Checking the coolant level

WARNING
Health hazard Coolant is harmful to health.
– Keep coolant out of the reach of children.
– Do not allow coolant to come into contact with skin, eyes, or clothing.
– Consult a doctor immediately if coolant has been ingested.
– Rinse the affected area immediately with plenty of water in the event of contact with skin.
– Rinse eyes thoroughly with water and consult a doctor immediately if coolant comes into contact with eyes.
– If coolant spills on to your clothing, change the clothing.
– Store coolant properly in a suitable container and keep out of the reach of children.

WARNING
Danger of scalding The coolant heats up and is under high pressure when the vehicle is operated.
– Do not open the radiator, the radiator hoses, or other cooling system components if the engine or the cooling system are at operating temperature.
– Allow the cooling system and the engine to cool down before you open the radiator, the radiator hoses, or other components of the cooling system.
– In the event of scalding, rinse the area affected immediately with lukewarm water.

Condition: The engine is cold

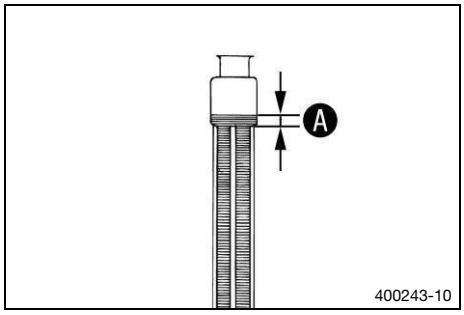

– Stand the motorcycle upright on a level surface.
– Take off the radiator cap.
– Check the coolant level in the radiator.

Coolant level A above the radiator fins	10 mm (0.39 in)

» If the coolant level does not meet the specifications:
– Correct the coolant level.

coolant	
Coolant (p. 176) Antifreeze protection to at least: −25 °C (−13.0 °F)	0.95 l (0.251 liq. gal_{US})

– Mount the radiator cap.

15.4 Draining the coolant

WARNING
Health hazard Coolant is harmful to health.
- Keep coolant out of the reach of children.
- Do not allow coolant to come into contact with skin, eyes, or clothing.
- Consult a doctor immediately if coolant has been ingested.
- Rinse the affected area immediately with plenty of water in the event of contact with skin.
- Rinse eyes thoroughly with water and consult a doctor immediately if coolant comes into contact with eyes.
- If coolant spills on to your clothing, change the clothing.
- Store coolant properly in a suitable container and keep out of the reach of children.

WARNING
Danger of scalding The coolant heats up and is under high pressure when the vehicle is operated.
- Do not open the radiator, the radiator hoses, or other cooling system components if the engine or the cooling system are at operating temperature.
- Allow the cooling system and the engine to cool down before you open the radiator, the radiator hoses, or other components of the cooling system.
- In the event of scalding, rinse the area affected immediately with lukewarm water.

Condition: The engine is cold

Preparatory work
(FX)
- Remove the skid plate. (p. 64)

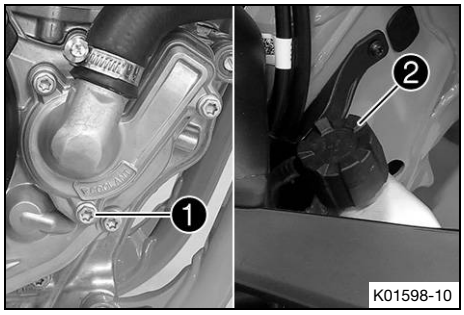

Main work
- Stand the motorcycle upright.
- Place an appropriate container under the water pump cover.
- Remove screw ❶. Take off radiator cap ❷.
- Completely drain the coolant.
- Mount screw ❶ with the new sealing ring and tighten.

Screw, water pump cover	
M6	10 Nm (7.4 ft·lb$_f$)

15.5 Refilling the coolant

WARNING
Health hazard Coolant is harmful to health.
- Keep coolant out of the reach of children.
- Do not allow coolant to come into contact with skin, eyes, or clothing.
- Consult a doctor immediately if coolant has been ingested.
- Rinse the affected area immediately with plenty of water in the event of contact with skin.
- Rinse eyes thoroughly with water and consult a doctor immediately if coolant comes into contact with eyes.
- If coolant spills on to your clothing, change the clothing.
- Store coolant properly in a suitable container and keep out of the reach of children.

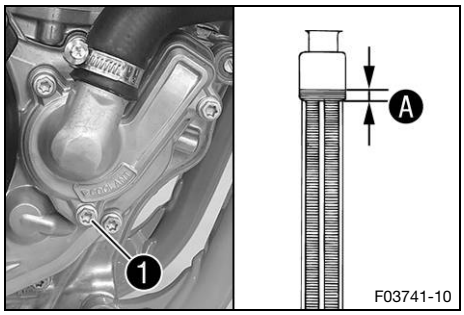

Main work

– Make sure that screw ❶ is tightened.
– Stand the motorcycle upright.
– Pour coolant in up to level Ⓐ above the radiator fins.

Distance Ⓐ above the radiator fins	10 mm (0.39 in)

coolant	
Coolant (p. 176) Antifreeze protection to at least: −25 °C (−13.0 °F)	0.95 l (0.251 liq. gal_{US})

– Mount the radiator cap.
– Go for a short test ride.
– Check the coolant level. (p. 125)

Reworking

(FX)

– Install the skid plate. (p. 64)

15.6 Changing the coolant

WARNING

Health hazard Coolant is harmful to health.

– Keep coolant out of the reach of children.
– Do not allow coolant to come into contact with skin, eyes, or clothing.
– Consult a doctor immediately if coolant has been ingested.
– Rinse the affected area immediately with plenty of water in the event of contact with skin.
– Rinse eyes thoroughly with water and consult a doctor immediately if coolant comes into contact with eyes.
– If coolant spills on to your clothing, change the clothing.
– Store coolant properly in a suitable container and keep out of the reach of children.

WARNING

Danger of scalding The coolant heats up and is under high pressure when the vehicle is operated.

– Do not open the radiator, the radiator hoses, or other cooling system components if the engine or the cooling system are at operating temperature.
– Allow the cooling system and the engine to cool down before you open the radiator, the radiator hoses, or other components of the cooling system.
– In the event of scalding, rinse the area affected immediately with lukewarm water.

Condition: The engine is cold

Preparatory work

(FX)

– Remove the skid plate. (p. 64)

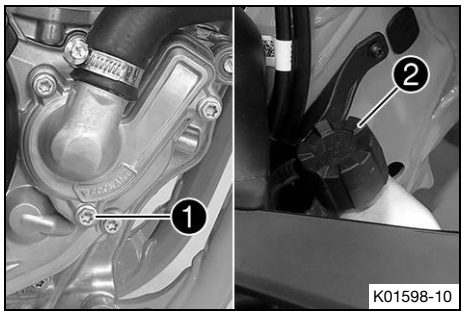

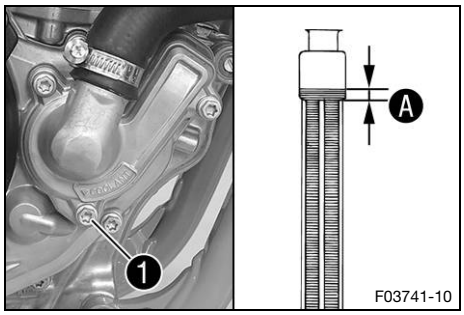

Main work

– Stand the motorcycle upright.
– Place an appropriate container under the water pump cover.
– Remove screw ❶. Take off radiator cap ❷.
– Completely drain the coolant.

– Mount screw ❶ with the new sealing ring and tighten.

Screw, water pump cover	
M6	10 Nm (7.4 ft·lb$_f$)

– Pour coolant in up to level Ⓐ above the radiator fins.

Distance Ⓐ above the radiator fins	10 mm (0.39 in)

coolant	
Coolant (p. 176) Antifreeze protection to at least: −25 °C (−13.0 °F)	0.95 l (0.251 liq. gal$_{US}$)

– Mount the radiator cap.

Reworking

(FX)

– Install the skid plate. (p. 64)
– Go for a short test ride.
– Check the coolant level. (p. 125)

16.1 Checking the play in the throttle cable

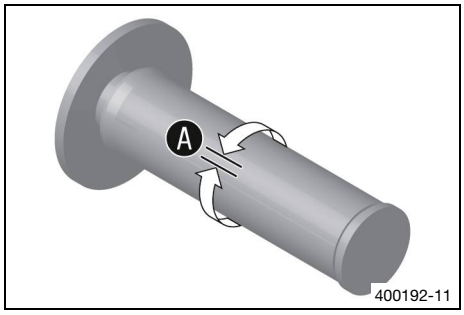

– Check the throttle for smooth operation.
– Move the handlebar to the straight-ahead position. Turn the throttle grip back and forth slightly and determine the play in throttle cable Ⓐ.

Throttle cable play	3 mm … 5 mm (0.12 in … 0.20 in)

» If the throttle cable play does not meet the specified value:
  – Adjust the throttle cable play. (p. 129)

– Press the cold start button in all the way to the stop.
✓ When the throttle twist grip is turned forward, the cold start button jumps back to the start position.
» If the cold start button does not return to its original position:
  – Adjust the throttle cable play. (p. 129)

DANGER
Danger of poisoning Exhaust gases are toxic and inhaling them may result in unconsciousness and death.
– Always ensure that there is sufficient ventilation when running the engine.
– Use suitable exhaust extraction when starting or running the engine in an enclosed space.

– Start the engine and let it run at idle speed. Move the handlebar back and forth over the entire steering range.

The idle speed must not change.

» If the idle speed changes:
  – Adjust the throttle cable play. (p. 129)

16.2 Adjusting the throttle cable play

Note
If the correct routing of the throttle cables has already been secured, the fuel tank does not need to be removed.

Preparatory work
– Remove the seat. (p. 76)
– Remove the fuel tank. (p. 85)
– Check the throttle cable routing. (p. 94)

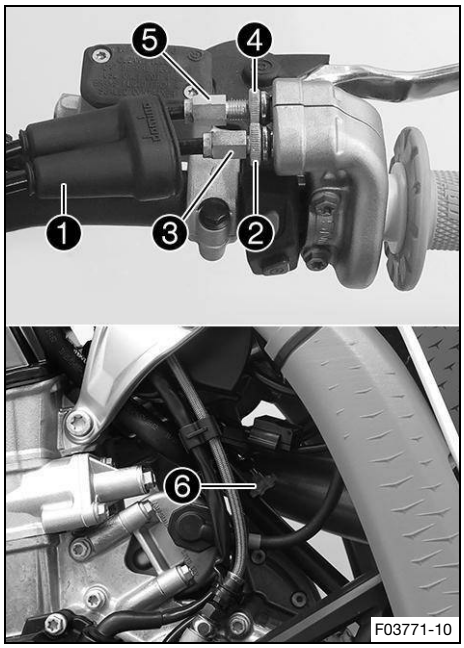

Main work

- Move the handlebar to the straight-ahead position.
- Push back boot ❶.
- Loosen nut ❷.
- Screw adjusting screw ❸ in as far as possible.
- Loosen nut ❹.
- Press cold start button ❻ all the way to the stop.
- Turn adjusting screw ❺ so that the cold start button moves to the basic position when the throttle twist grip is turned forward.
- Tighten nut ❹.
- Turn adjusting screw ❸ so that there is play in the throttle cable at the throttle twist grip.

Throttle cable play	3 mm … 5 mm (0.12 in … 0.20 in)

- Tighten nut ❷.
- Slide on boot ❶.
- Check the throttle grip for smooth operation.

Reworking

- Check the play in the throttle cable. (p. 129)
- Install the fuel tank. (p. 87)
- Mount the seat. (p. 77)

16.3 Adjusting the characteristic map of the throttle response

Note

On the throttle grip, the characteristic map of the throttle response is changed by changing the guide plate.

A guide plate with a different characteristic map is supplied.

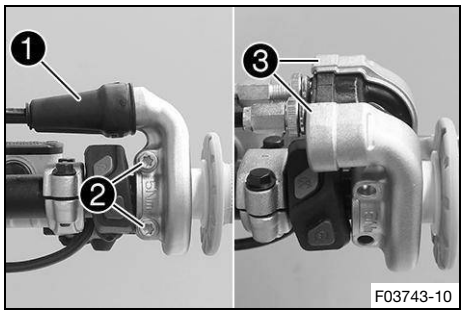

Main work

- Push back boot ❶.
- Remove screws ❷ and half-shells ❸.
- Detach the throttle cables and take off the grip tube.

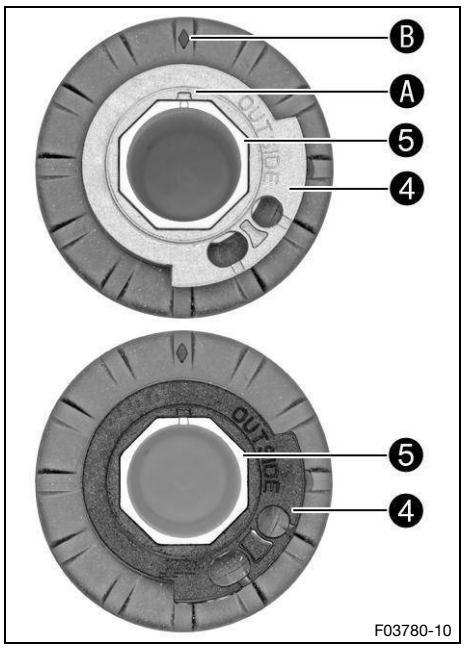

– Remove guide plate ❹ from handle tube ❺.
– Position the required guide plate on the grip tube.

The **OUTSIDE** label must be visible. Marking Ⓐ must be positioned at marking Ⓑ.

Gray guide plate (A48002014000)
Work material (Alternative 1 / 1)
Black guide plate (A46002014000)

Note

The gray guide plate opens the throttle valve more slowly.

The black guide plate opens the throttle valve more quickly.

The gray guide plate is mounted upon delivery.

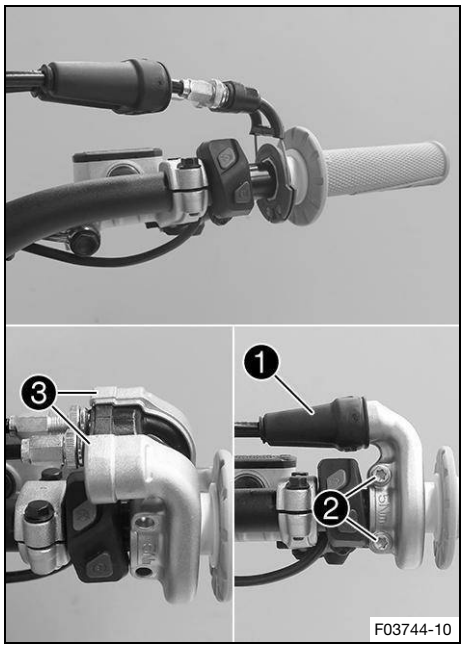

– Clean the outside of the handlebar and the inside of the grip tube. Mount the grip tube on the handlebar.
– Attach the throttle cables to the guide plate and route correctly.
– Position half-shells ❸, mount and tighten screws ❷.

Screw, throttle twist grip	
M6	5 Nm (3.7 ft·lb$_f$)

– Slide on sleeve ❶ and check the throttle grip for ease of movement.

Reworking

– Check the play in the throttle cable. (p. 129)

16.4 Changing the mapping

Note
The desired engine characteristic can be activated using the combination switch.
The setting most recently selected is activated again when restarting.
Traction control can also be activated in each mapping.
The mapping can also be changed during the ride.

– Select one of the following alternatives.

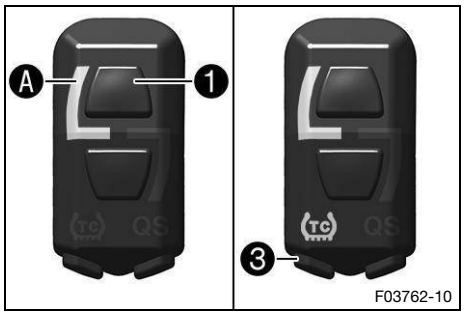

Activating STANDARD mapping

– Press button ❶.

Engine speed	< 4,000 rpm (< 66.67 Hz)

✓ The indicator lamp Ⓐ lights up.
✓ STANDARD: balanced response

Note
Traction control can be activated additionally using TC button ❸.

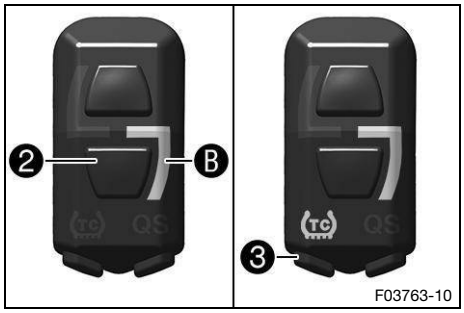

Activating ADVANCED mapping

– Press button ❷.

Engine speed	< 4,000 rpm (< 66.67 Hz)

✓ The indicator lamp Ⓑ lights up.
✓ ADVANCED: direct response

Note
Traction control can be activated additionally using TC button ❸.

16.5 adjusting the idle speed

WARNING
Danger of accidents The engine may suddenly come to a halt if the idle speed is set too low.
– Set the idle speed to the specified value.

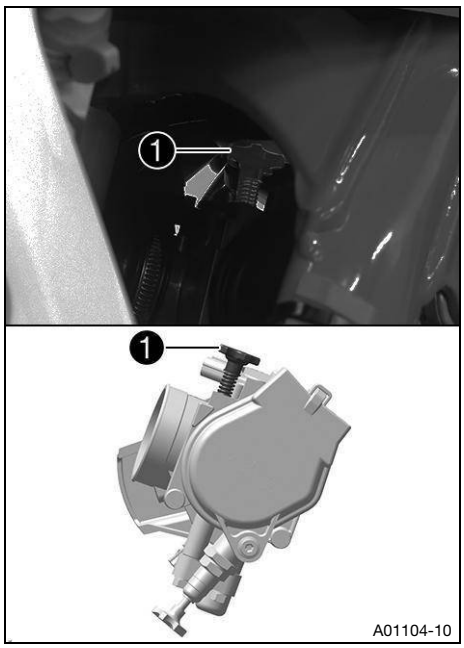

– Run the engine until warm.
  ✓ The cold start button is in the basic position.

DANGER
Danger of poisoning Exhaust gases are toxic and inhaling them may result in unconsciousness and death.
– Always ensure that there is sufficient ventilation when running the engine.
– Use suitable exhaust extraction when starting or running the engine in an enclosed space.

– Adjust the idle speed by turning idle speed adjustment screw ❶ using a suitable rpm gage.

Make the adjustment in small steps.	
Idle speed	2,200 rpm … 2,300 rpm (36.67 Hz … 38.33 Hz)

Note
Turning counterclockwise lowers the idle speed.
Turning clockwise increases the idle speed.
An incorrect idle speed can have a negative impact on overall engine running.

16.6 Programming the throttle valve position

Note
If the control unit detects that the throttle valve position at idle speed needs to be reprogrammed, then the malfunction indicator lamp flashes 2x per second.

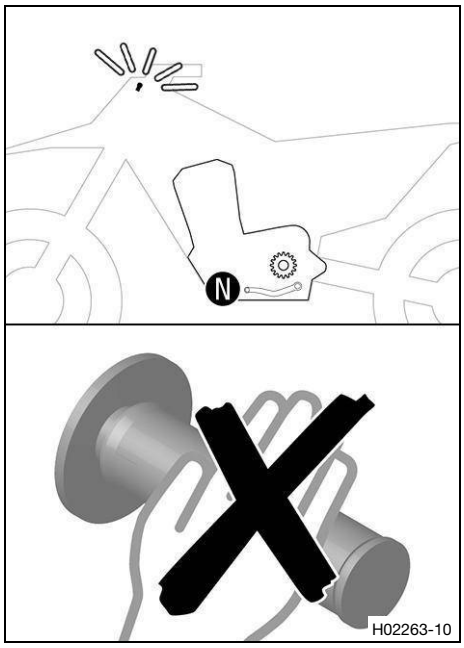

DANGER
Danger of poisoning Exhaust gases are toxic and inhaling them may result in unconsciousness and death.
– Always ensure that there is sufficient ventilation when running the engine.
– Use suitable exhaust extraction when starting or running the engine in an enclosed space.

– Allow the vehicle to run at idle speed.
  ✓ The malfunction indicator lamp stops flashing once programming is completed.

Note
If the engine becomes too warm, perform a cool-down ride at medium speed.
After this, do not switch off the engine, but leave it running at idle speed until the programming is finished.

16.7 Checking the basic position of the gear shift lever

Note
When driving, the gear shift lever must not touch the rider's boot when in the basic position.
If the shift lever is permanently touching the boot, the transmission will be subject to excessive load; this can cause a malfunction of the quickshifter.

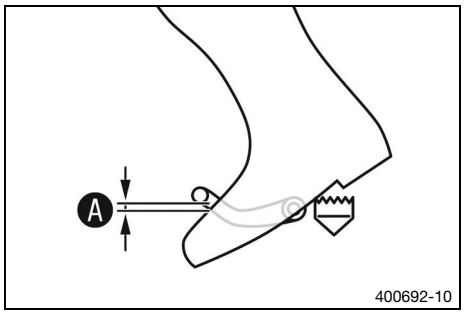

– Sit on the vehicle in the riding position and measure the distance Ⓐ between the upper edge of your boot and the shift lever.

Distance between the gear shift lever and upper edge of boot	10 mm … 20 mm (0.39 in … 0.79 in)

» If the distance does not meet the specifications:
  – Adjust the basic position of the gear shift lever. (p. 134)

16.8 Adjusting the basic position of the gear shift lever

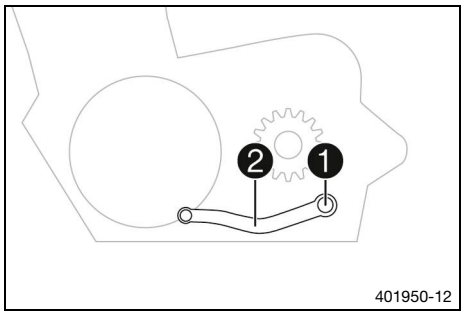

– Remove screw ❶ with the washers and take off shift lever ❷.

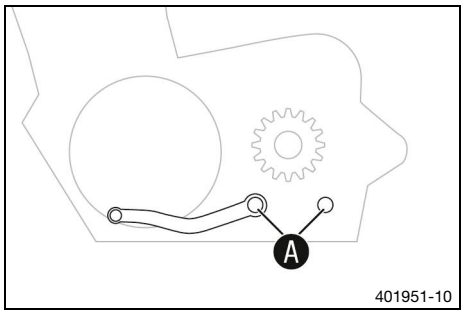

– Clean gear teeth Ⓐ of the shift lever and shift shaft.
– Mount the gear shift lever on the shift shaft in the desired position and engage the toothing.

The gear shift lever must not come into contact with any other vehicle components during the shift procedure.

Note
The range of adjustment is limited.

– Mount and tighten screw ❶ with washers.

Screw, shift lever	
M6×16	14 Nm (10.3 ft·lb$_f$) **Loctite® 243**

17.1 Changing the fuel screen

DANGER

Fire hazard Fuel is highly flammable.

The fuel in the fuel tank expands when warm and can escape if overfilled.

- Do not refuel the vehicle in the vicinity of open flames, glowing, or smoldering objects.
- Make sure that nobody smokes in the vicinity of the vehicle during the refueling process.
- Switch off the engine for refueling.
- Make sure that no fuel is spilled; particularly not on hot parts of the vehicle.
- If any fuel is spilled, wipe it up immediately.
- Do not overfill the fuel tank.

WARNING

Danger of poisoning Fuel is harmful to health.

- Do not allow fuel to come into contact with skin, eyes, or clothing.
- Consult a doctor immediately if fuel has been ingested.
- Do not inhale fuel vapors.
- Rinse the affected area immediately with plenty of water in the event of contact with skin.
- Rinse eyes thoroughly with water and consult a doctor immediately if fuel comes into contact with eyes.
- If fuel spills on to your clothing, change the clothing.
- Store fuel properly in a suitable container and keep out of the reach of children.

NOTE

Environmental hazard Improper handling of fuel is dangerous to the environment.

- Do not allow fuel to enter the groundwater, the soil, or the sewage system.

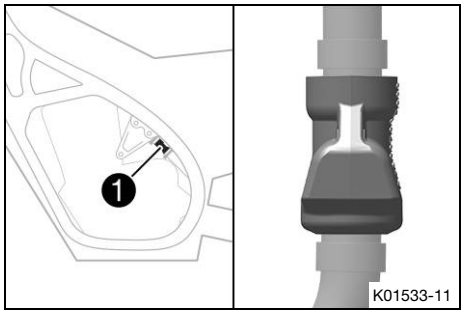

- Remove protection cap ❶ of the fuel line.

– Clean quick-lock coupling ❷ thoroughly with compressed air.

Dust must not enter the fuel line. Dirt in the fuel line clogs the injector!

– Disconnect the quick-lock coupling.

Note
Remaining fuel may flow out of the fuel hose.

– Pull fuel screen ❸ out of the connecting piece.
– Slide the new fuel screen all the way into the connecting piece.
– Spray silicone spray onto a lint-free cleaning cloth and lightly lubricate the O-ring of the quick-lock coupling.

Silicone spray (p. 176)

– Join quick release coupling ❷.

DANGER
Danger of poisoning Exhaust gases are toxic and inhaling them may result in unconsciousness and death.
– Always ensure that there is sufficient ventilation when running the engine.
– Use suitable exhaust extraction when starting or running the engine in an enclosed space.

– Start the engine and check the response.
– Mount protection cap ❶ of the fuel line.

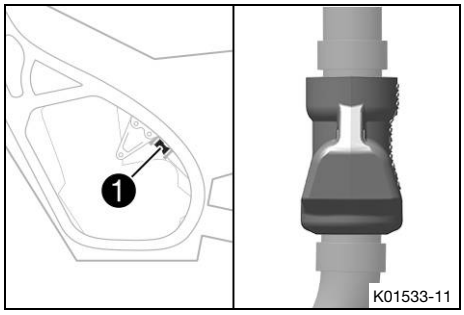

17.2 Checking the engine oil level

Note
The engine oil level can be checked when the engine is cold or warm.

Preparatory work
– Stand the motorcycle upright on a level surface.

Main work
– Select one of the following alternatives.

Condition: The engine is cold

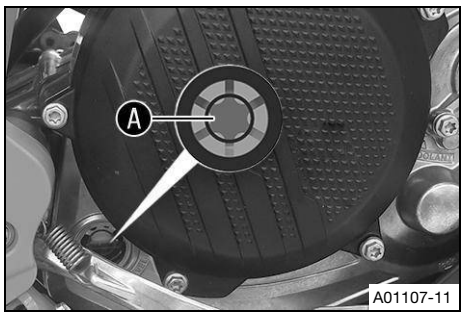

– Check the engine oil level.

The engine oil reaches the middle of level viewer Ⓐ.

» If the engine oil does not reach the middle of the level viewer:
  – Add engine oil. (p. 140)

Condition: The engine is at operating temperature

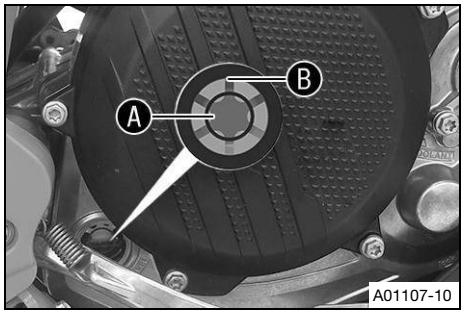

– Check the engine oil level.

After switching off the engine, wait one minute before checking the level.
The engine oil level is between the middle of the level viewer Ⓐ and the upper edge of the level viewer Ⓑ.

» If the engine oil is not between the Ⓐ and Ⓑ markings:
  – Add engine oil. (p. 140)

17.3 Changing the engine oil and oil filter, cleaning the oil screens

WARNING

Danger of scalding Engine and gear oil heat up when the motorcycle is operated.
– Wear suitable protective clothing and safety gloves.
– In the event of scalding, rinse the area affected immediately with lukewarm water.

NOTE

Environmental hazard Hazardous substances cause environmental damage.
– Dispose of oils, grease, filters, fuel, cleaning agents, brake fluid, etc. correctly and in accordance with the applicable regulations.

Note

Drain the engine oil while the engine is at operating temperature.

Preparatory work
– Park the motorcycle on a level surface.

(FX)
– Remove the skid plate. (p. 64)

Main work

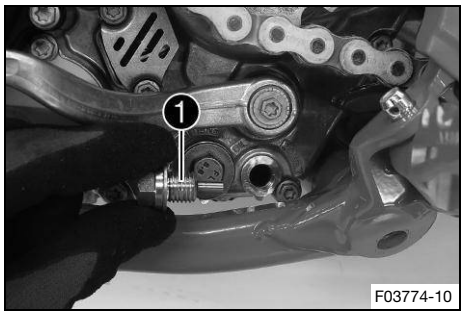

- Position an appropriate container under the engine.
- Remove oil drain plug ❶ with the magnet and seal ring.

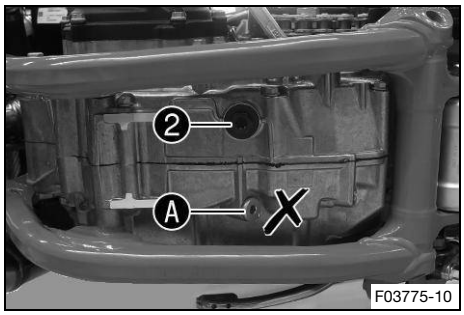

- Remove screw plug ❷ with O-ring.

Do not remove screw Ⓐ.

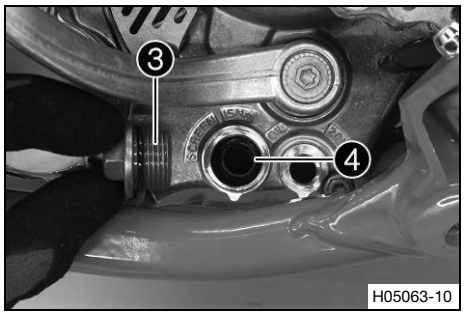

- Remove screw plug ❸ with long oil screen ❹ and the O-rings.
- Allow the engine oil to drain completely.
- Thoroughly clean the parts and the sealing surfaces.

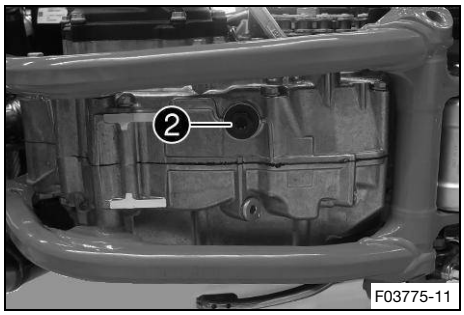

- Mount and tighten screw plug ❷ with O-ring.

Screw plug, crankcase	
M16×1.5	15 Nm (11.1 ft·lb$_f$)

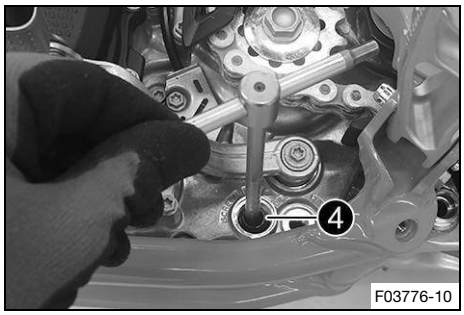

- Position long oil screen ❹ with the O-rings on a pin wrench.
- Position the pin wrench through the drill hole of the screw plug in the opposite section of the engine case.
- Push the oil screen all the way into the engine case.

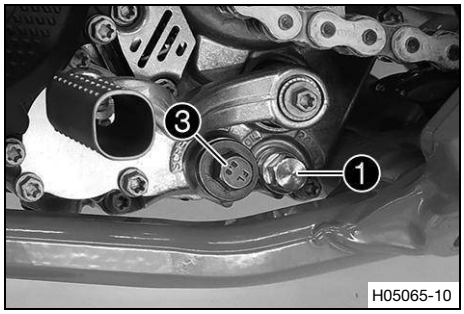

– Mount and tighten screw plug ❸ with O-ring.

Plug, oil screen	
M20×1.5	15 Nm (11.1 ft·lb$_f$)

– Mount and tighten oil drain plug ❶ with the magnet and a new seal ring.

Oil drain plug with magnet	
M12×1.5	20 Nm (14.8 ft·lb$_f$)

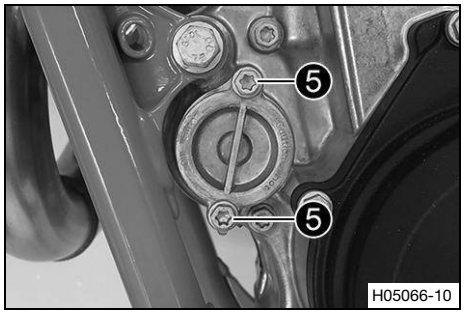

– Remove screws ❺. Take off the oil filter cover with the O-ring.

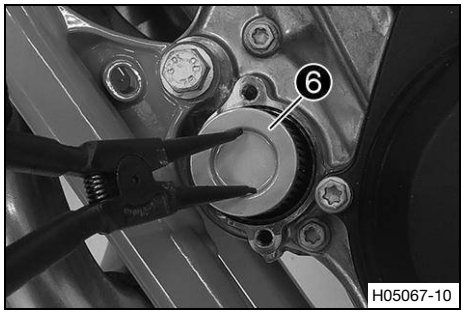

– Pull oil filter ❻ out of the oil filter housing.

Lock ring plier (51012011000)

– Allow the engine oil to drain completely.
– Thoroughly clean the parts and the sealing surfaces.

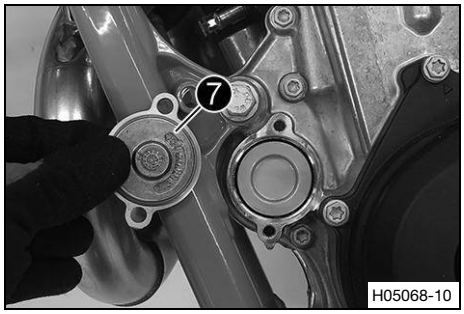

– Lay the motorcycle on its side and fill the oil filter housing to about ⅓ full with engine oil.
– Place the oil filter into the oil filter housing.
– Lubricate the O-ring of the oil filter cover and mount it with oil filter cover ❼.
– Mount and tighten the screws.

Screw, oil filter cover	
M6×16	10 Nm (7.4 ft·lb$_f$)

– Stand the motorcycle upright.

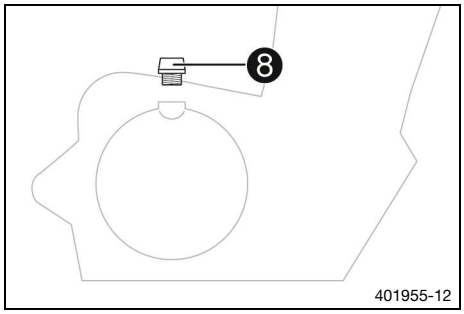

– Remove filler plug ❽ with the O-ring, and fill up with engine oil.

engine oil	
Engine oil (10W/50) (p. 175) fully synthetic	1.20 l (0.317 liq. gal$_{US}$)

Note
Too little engine oil or poor-quality engine oil will result in premature wear of the engine.

– Mount and tighten the oil plug together with the O-ring.

DANGER
Danger of poisoning Exhaust gases are toxic and inhaling them may result in unconsciousness and death.
– Always ensure that there is sufficient ventilation when running the engine.
– Use suitable exhaust extraction when starting or running the engine in an enclosed space.

– Start the engine and check it for leaks.

Reworking
(FX)
– Install the skid plate. (p. 64)
– Check the engine oil level. (p. 136)

17.4 Adding engine oil

Note
Too little engine oil or poor-quality engine oil will result in premature wear of the engine.

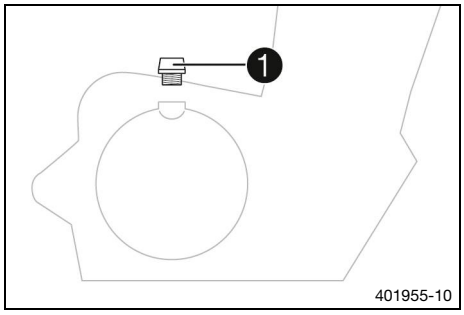

Main work
– Remove oil plug 1 with O-ring.
– Add the same engine oil used when the last oil change was carried out.

engine oil	
Engine oil (10W/50) (p. 175) fully synthetic	1.20 l (0.317 liq. gal_{US})

Note
For optimal performance of the engine oil, do not mix different types of engine oil.

Tip
Husqvarna Mobility recommends changing the engine oil when necessary.

– Mount and tighten the oil plug together with the O-ring.

DANGER

Danger of poisoning Exhaust gases are toxic and inhaling them may result in unconsciousness and death.

– Always ensure that there is sufficient ventilation when running the engine.
– Use suitable exhaust extraction when starting or running the engine in an enclosed space.

– Start the engine and check it for leaks.

Reworking

– Check the engine oil level. (p. 136)

18.1 Cleaning the motorcycle

NOTE

Material damage Components can be damaged or destroyed if a high-pressure cleaner is used incorrectly.

The high pressure forces water into the electrical components, socket connectors, clutch cables, and bearings, etc.

Too high a pressure can cause malfunctions and destroy components.

– Do not direct the water jet directly on to electrical components, socket connectors, clutch cables, or bearings.
– Maintain a minimum distance between the nozzle of the high-pressure cleaner and the component.

Minimum distance	60 cm (23.6 in)

NOTE

Environmental hazard Hazardous substances cause environmental damage.

– Dispose of oils, grease, filters, fuel, cleaning agents, brake fluid, etc. correctly and in accordance with the applicable regulations.

Note

To maintain the value and appearance of the motorcycle over a long period, clean it regularly.

Avoid direct sunshine when cleaning the motorcycle.

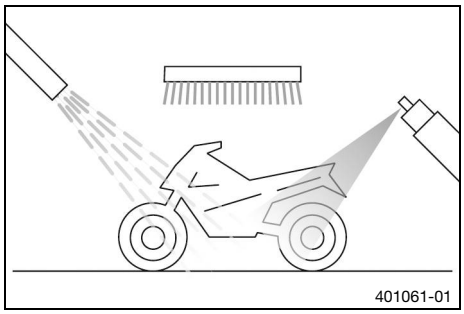

– Seal the exhaust system to prevent water from entering into it.
– Remove loose dirt first with a soft jet of water.
– Spray the heavily soiled parts with a standard commercial motorcycle cleaner and clean using a brush.

Never apply motorcycle cleaner to a dry vehicle; always rinse the vehicle with water first.

Environmentally neutral universal cleaning agent (p. 178)

Note

Use warm water containing standard motorcycle cleaner and a soft sponge.

– After rinsing the motorcycle with a gentle spray of water, allow it to dry thoroughly.
– Remove the cover from the exhaust system.

WARNING

Danger of accidents Moisture and dirt impair the brake system.

– Brake carefully several times to dry out and remove dirt from the brake pads and the brake discs.

– After cleaning, ride the vehicle a short distance until the engine warms up.

Note
The heat produced causes water to evaporate at inaccessible locations in the engine and on the brake system.

– Push back the protection caps of the handlebar controls to allow any water that has penetrated to evaporate.
– After the motorcycle has cooled off, lubricate all moving parts and pivot points.
– Clean the chain. (p. 89)

WARNING
Danger of accidents Oil, grease or wax on the brake discs reduces the brake action.
– Always keep the brake discs free of oil, fat and wax.
– Clean the brake discs with brake cleaner when necessary.

– Treat bare metal (except for brake discs and the exhaust system) with an anticorrosive.

Preserving materials (p. 178)

– Treat all plastic parts and powder-coated parts with a mild cleaning and care product.

Cleaning agents for plastics, glass, lacquers, metals, windshields and visors (p. 178)

19.1 Storage

WARNING

Danger of poisoning Fuel is harmful to health.

- Do not allow fuel to come into contact with skin, eyes, or clothing.
- Consult a doctor immediately if fuel has been ingested.
- Do not inhale fuel vapors.
- Rinse the affected area immediately with plenty of water in the event of contact with skin.
- Rinse eyes thoroughly with water and consult a doctor immediately if fuel comes into contact with eyes.
- If fuel spills on to your clothing, change the clothing.
- Store fuel properly in a suitable container and keep out of the reach of children.

Note

If you plan to garage the motorcycle for a longer period, perform the following steps or have them performed.

Before storing the motorcycle, check all parts for function and wear. If service, repairs, or replacements are necessary, you should do this during the storage period (workshops less busy). In this way, you can avoid long workshop waiting times at the start of the new season.

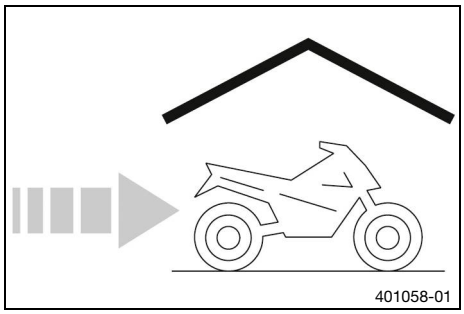

- When refueling for the last time before taking the motorcycle out of service, add fuel additive.

Fuel additive (p. 174)

- Refuel. (p. 40)

Tip

Fill the fuel tank completely as specified, using fuel with the lowest possible ethanol content.

- Clean the motorcycle. (p. 142)
- Change the engine oil and the oil filter, clean the oil screens. (p. 137)
- Check the frost protection and coolant level. (p. 124)
- Check the tire pressure. (p. 115)
- Remove the 12 V battery. (p. 117)
- Charge the 12 V battery. (p. 119)

Ideal charging and storage temperature of the lithium-ion battery	10 °C … 20 °C (50.0 °F … 68.0 °F)

- Store the vehicle in a dry location that is not subject to large fluctuations in temperature.

Tip

Husqvarna Mobility recommends picking up the motorcycle.

- Raise the motorcycle with a lift stand. (p. 60)
- Cover the vehicle with a tarpaulin or similar cover that is permeable to air.

Do not use non-porous materials because they prevent humidity from escaping and thus cause corrosion.

Note

Avoid running the engine of a motorcycle in storage for a short time only. Since the engine cannot warm up properly, the water vapor produced during combustion condenses and causes valves and the exhaust system to rust.

19.2 Preparing for use after storage

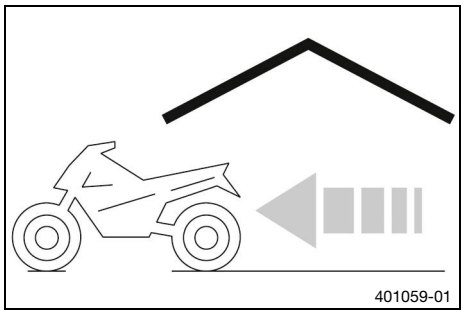

- Install the 12 V battery. (p. 118)
- Remove the motorcycle from the lift stand. (p. 60)
- Perform checks and maintenance measures when preparing for use. (p. 33)
- Take a test ride.

20.1 Troubleshooting

Cause	Finding	Remedy
The engine does not turn over when the start button is actuated	Operating error 12 V battery discharged Plug-in connector of the start button disconnected or oxidized Cable connection on starter motor disconnected, loose or oxidized Main fuse blown Starter relay defective Starter motor defective	– Carry out the starting procedure. (p. 33) – Charge the 12 V battery. (p. 119) – Check the charging voltage. – Check the open-circuit current. – Check the stator winding of the alternator. – Check the plug-in connector of the start button. – Check the cable connection on the starter motor. – Change the main fuse. (p. 121) – Check the starter relay. – Check the starter motor.
The engine turns but does not start	Quick-lock coupling not joined Lack of fuel Fuel screen in the quick-lock coupling is clogged Idle speed is not set correctly Spark plug sooty or wet Crankshaft speed sensor disconnected Ground connection of the ignition coil loose or oxidized Plug gap of spark plug too wide Short-circuit cable in wiring harness frayed, kill switch faulty Malfunction in the electronic fuel injection	– Join quick-lock couplings. – Refuel. (p. 40) – Change the fuel screen. (p. 135) – Adjust the idle speed. (p. 132) – Clean and dry the spark plug and spark plug connector, or change if necessary. – Check plug-in connector of the crankshaft speed sensor. – Check the ground connection of the ignition coil. – Adjust plug gap. Plug gap of spark plug: 1.0 mm (0.039 in) – Check the wiring harness. (Visual check). – Check the electrical system. – Read out the fault memory using the diagnostics tool.
Engine does not speed up	Malfunction in the electronic fuel injection	– Read out the fault memory using the diagnostics tool.
Engine has too little power	Air filter is very dirty Fuel filter is very dirty Malfunction in the electronic fuel injection Exhaust system leaks, deformed or too little damping material in the silencer Valve clearance too little	– Clean the air filter and air filter box. (p. 81) – Change the fuel filter. – Read out the fault memory using the diagnostics tool. – Check exhaust system for damage. – Change the damping material on the main silencer. (p. 84) – Adjust the valve clearance.

Cause	Finding	Remedy
The engine dies during the trip	Lack of fuel Faulty contacts in ignition coil or stator	– Refuel. (p. 40) – Check ignition coil and stator cables.
Engine overheats	Too little coolant in cooling system Too little air stream Radiator fins very dirty Foam formation in the cooling system Bent radiator hose	– Check the transmission and cooling system for leaks. – Check the coolant level. (p. 125) – Switch off the engine when standing. – Clean the radiator fins. – Drain the coolant. (p. 126) – Refill the coolant. (p. 126) – Change the radiator hose.
Malfunction indicator lamp lights up or flashes	Malfunction in the electronic fuel injection	– Check the wiring for damage and the electrical plug-in connections for corrosion and damage. – Read out the fault memory using the diagnostics tool.
High oil consumption	Engine vent hose bent The engine oil level is too high The engine oil is too thin (low viscosity) Piston or cylinder worn Engine case is leaking	– Route the vent hose without bends or change it if necessary. – Check the engine oil level. (p. 136) – Change the engine oil and the oil filter, clean the oil screens. (p. 137) – Measure the piston/cylinder mounting clearance. – Check the engine case for loss of oil.
12 V battery discharged	12 V battery is not charging unwanted electrical load	– Check the charging voltage. – Check the stator winding of the alternator. – Check the open-circuit current.

21.1 Engine control trouble code

Blink code for malfunction indicator light	Fi 02: Malfunction indicator light flashes 2x short
Error level condition	Crankshaft speed sensor – circuit fault The induction manifold pressure sensor delivers a normal signal (engine running), while the crankshaft speed sensor does not generate any signal at all. Time: ≥ 2.0 s

Blink code for malfunction indicator light	Fi 06: Malfunction indicator light flashes 6x short
Error level condition	Throttle valve position sensor circuit A – input signal too low Voltage: ≤ 0.352 V Time: ≥ 3 s Throttle valve position sensor circuit A – input signal too high Voltage: ≥ 4.785 V Time: ≥ 3 s

Blink code for malfunction indicator light	Fi 09: Malfunction indicator light flashes 9x short
Error level condition	Induction manifold pressure sensor – input signal too high Voltage: ≥ 4.121 V Time: ≥ 3 s Induction manifold pressure sensor – input signal too low Voltage: ≤ 0.215 V Time: ≥ 3 s

Blink code for malfunction indicator light	Fi 12: Malfunction indicator light flashes 1x long, 2x short
Error level condition	Coolant temperature sensor – input signal too high Voltage: ≥ 4.785 V Time: ≥ 3 s Coolant temperature sensor – input signal too low Voltage: ≤ 0.137 V Time: ≥ 3 s

Blink code for malfunction indicator light	Fi 13: Malfunction indicator light flashes 1x long, 3x short
Error level condition	Intake air temperature sensor – input signal too high Voltage: ≥ 4.824 V Time: ≥ 3 s Intake air temperature sensor – input signal too low Voltage: ≤ 0.195 V Time: ≥ 3 s

Blink code for malfunction indicator light	Fi 15: Failure indicator light flashes 1x long, 5x short
Error level condition	Tilt sensor – input signal too low Voltage: ≤ 0.176 V Time: ≥ 25.5 s Tilt sensor – open / input signal too high Voltage: ≥ 4.57 V Time: ≥ 25.5 s

Blink code for malfunction indicator light	Fi 21: Malfunction indicator light flashes 2x long, 1x short
Error level condition	Battery voltage – input voltage too high Engine control unit power supply: ≥ 15.98 V Time: ≥ 2 s

Blink code for malfunction indicator light	Fi 22: Failure indicator light flashes 2x long, 2x short
Error level condition	Gear position sensor – input signal too low Time: ≥ 0.1 s Gear position sensor – input signal too high Time: ≥ 0.1 s Gear position sensor malfunction

Blink code for malfunction indicator light	Fi 33: Malfunction indicator lamp flashes 3x long, 3x short
Error level condition	Injection valve cylinder 1 – circuit fault Time: ≥ 2.0 s

Blink code for malfunction indicator light	Fi 37: Malfunction indicator light flashes 3x long, 7x short
Error level condition	Ignition coil – circuit fault Time: ≥ 2.0 s

Blink code for malfunction indicator light	Fi 41: Malfunction indicator light flashes 4x long, 1x short
Error level condition	Fuel pump controller – short circuit to ground/open circuit The engine is switched off: ≥ 3 s Fuel pump controller - short circuit to plus The engine is switched off: ≥ 3 s

Blink code for malfunction indicator light	Fi 65: Failure indicator light flashes 6x long, 5x short
Error level condition	EEPROM – malfunction Read data and write data are different.

Blink code for malfunction indicator light	Fi 91: Failure indicator light flashes 9x long, 1x short
Error level condition	CAN bus communication – faulty CAN bus communication – faulty

Blink code for malfunction indicator light	Fi Malfunction indicator lamp flashes continuously
Error level condition	THREF – internal malfunction of the engine control unit

22.1 Engine

22.1.1 Technical data - engine

Design	1-cylinder 4-stroke engine, water-cooled
Displacement	449.9 cm³ (27.455 in³)
Stroke	63.4 mm (2.496 in)
Bore	95 mm (3.74 in)
Compression ratio	13.6:1
Control	OHC, 4 valves controlled via rocker arm
Valve clearance	
Intake at: 20 °C (68.0 °F)	0.10 mm … 0.15 mm (0.0039 in … 0.0059 in)
Exhaust at: 20 °C (68.0 °F)	0.12 mm … 0.17 mm (0.0047 in … 0.0067 in)
Valve diameter, intake	40 mm (1.57 in)
Valve diameter, exhaust	33 mm (1.30 in)
Idle speed	2,200 rpm … 2,300 rpm (36.67 Hz … 38.33 Hz)
Crankshaft bearing	2-cylinder roller bearing
Big (bottom) end bearing	Plain bearing
Wrist pin bearing	Bearing bush
Piston	Forged light alloy
Piston rings	1 compression ring, 1 oil scraper ring
Engine lubrication	Pressure circulation lubrication with 2 trochoidal pumps
Primary transmission	29:72
Alternator	• 14 V • 77 W (0.103 hp)
Clutch	Multidisc clutch in oil bath, hydraulically activated
Transmission	
(All FC models)	5 speed transmission, claw shifted
(FX)	6 speed transmission, claw shift
Gear ratios **(All FC models)**	
1st gear	2:28 PM
2nd Gear	16:26
3rd Gear	18:24
4th Gear	21:24
5th Gear	22:21
Gear ratios **(FX)**	
1st gear	17:35

2nd Gear	17:28
3rd Gear	18:25
4th Gear	22:26
5th Gear	23:23
6th Gear	26:22
Ignition system	Contactless controlled fully electronic ignition with digital ignition adjustment
Spark plug	NGK LMAR9AI-10
Plug gap of spark plug	1.0 mm (0.039 in)
Cooling	Liquid cooling, permanent circulation of coolant by water pump
Starting aid	Starter motor

22.1.2 Capacities - engine

engine oil	
Engine oil (10W/50) (p. 175) fully synthetic	1.20 l (0.317 liq. gal_{US})
coolant	
Coolant (p. 176) Antifreeze protection to at least: −25 °C (−13.0 °F)	0.95 l (0.251 liq. gal_{US})

22.2 Chassis

22.2.1 Technical data - chassis

Frame	Central tube frame made of chrome molybdenum steel tubing
Suspension travel: **(All FC models)**	
front	305 mm (12.01 in)
rear	293 mm (11.54 in)
Suspension travel: **(FX)**	
front	300 mm (11.81 in)
rear	300 mm (11.81 in)
Triple clamp offset	22 mm (0.87 in)
Brake system	Disc brakes, floating brake calipers
Brake discs - diameter	
front	260 mm (10.24 in)
rear	220 mm (8.66 in)
Brake disc wear limit	

front	2.5 mm (0.098 in)
rear	3.5 mm (0.138 in)
Final drive	
(All FC models)	13:51
(FX)	14:50
Chain	520
Rear sprockets available	• 50 teeth • 51 teeth
Steering head angle	63.9° (1.115 rad)
Wheelbase	
(All FC models)	1,490 ±10 mm (58.66 ±0.39 in)
(FX)	1,493 ±10 mm (58.78 ±0.39 in)
Ground clearance unloaded	
(All FC models)	336 mm (13.23 in)
(FX)	343 mm (13.50 in)
Seat Height unloaded	
(All FC models)	946 mm (37.24 in)
(FX)	954 mm (37.56 in)
Weight without fuel approx.	
(All FC models)	103.3 kg (227.74 lb)
(FX)	106.0 kg (233.69 lb)
Maximum permissible front axle load	145 kg (319.7 lb)
Maximum permissible rear axle load	190 kg (418.9 lb)
Maximum permissible total weight	335 kg (738.5 lb)

22.2.2 Technical data - tires

Off-road tire pressure	
front	1.0 bar (14.5 psi)
rear	1.0 bar (14.5 psi)

Validity	Tire front	Rear tire
(FC 450)	80/100 - 21 51M TT Dunlop GEOMAX MX34F	110/90 - 19 62M TT Dunlop GEOMAX MX34
(FC 450 US)	80/100 - 21 51M TT Dunlop GEOMAX MX34F	120/90 - 19 63M TT Dunlop GEOMAX MX34
(FX)	80/100 - 21 51M TT Dunlop GEOMAX AT82F	110/100 - 18 64M TT Dunlop GEOMAX AT82
The tires specified represent one of the possible series production tires. For alternative manufacturers, if any, contact an authorized manufacturer or qualified tire dealership. If local road approval regulations apply, these and the respective technical specifications must be observed.		

22.2.3 Capacities - vehicle

Total fuel tank capacity, approx.	
Super unleaded (ROZ 95) (p. 174)	(All FC models) 7.2 l (1.90 liq. gal_{US})
	(FX) 8.5 l (2.25 liq. gal_{US})

22.3 Electrics

22.3.1 Battery

12-V battery	HJTZ5S-FP-C	Lithium-ion battery Battery voltage: 12 V Nominal capacity: 2.0 Ah Maintenance-free

22.3.2 Fuses

Fuse	58011109110	10 A
Fuse	58011109105	5 A

22.3.3 Lamps

Dashboard illumination and indicator lights	LED

22.4 Fork

22.4.1 Technical data - fork (FC 450)

Fork part number	A360C109Y406000

Fork	WP XACT AER
Compression damping	
Comfort	17 clicks
Standard	12 clicks
Sport	7 clicks

Rebound damping	
Comfort	17 clicks
Standard	12 clicks
Sport	7 clicks
Air pressure	
Weight of rider: 65 kg … 75 kg (143.3 lb … 165.3 lb)	10.2 bar (147.9 psi)
Weight of rider: 75 kg … 85 kg (165.3 lb … 187.4 lb)	10.4 bar (150.8 psi)
Weight of rider: 85 kg … 95 kg (187.4 lb … 209.4 lb)	10.6 bar (153.7 psi)
Fork length	940 mm (37.01 in)

22.4.2 Capacities - fork (FC 450)

Oil capacity, right outer assembly	
Fork oil (48601166S1) (SAE 4) (p. 175)	240^{+10}_{-50} ml ($8.12^{+0.34}_{-1.69}$ fl. oz_{US})
Oil capacity, left outer assembly	
Fork oil (48601166S1) (SAE 4) (p. 175)	240^{+10}_{-50} ml ($8.12^{+0.34}_{-1.69}$ fl. oz_{US})
Oil capacity, right cartridge	
Fork oil (48601166S1) (SAE 4) (p. 175)	370 ml (12.51 fl. oz_{US})
Grease capacity, left cartridge	
Special grease (00062010053) (p. 176)	5 g (0.18 oz)

22.4.3 Technical data - fork (FC 450 US)

Fork part number	A360C159Y406000

Fork	**WP XACT AER**
Compression damping	
Comfort	17 clicks
Standard	12 clicks
Sport	7 clicks
Rebound damping	
Comfort	23 clicks
Standard	18 clicks
Sport	13 clicks
Air pressure	
Weight of rider: 65 kg … 75 kg (143.3 lb … 165.3 lb)	10.3 bar (149.4 psi)
Weight of rider: 75 kg … 85 kg (165.3 lb … 187.4 lb)	10.5 bar (152.3 psi)

Weight of rider: 85 kg … 95 kg (187.4 lb … 209.4 lb)	10.7 bar (155.2 psi)
Fork length	940 mm (37.01 in)

22.4.4 Capacities - fork (FC 450 US)

Oil capacity, right outer assembly	
Fork oil (48601166S1) (SAE 4) (p. 175)	240^{+10}_{-50} ml ($8.12^{+0.34}_{-1.69}$ fl. oz_{US})
Oil capacity, left outer assembly	
Fork oil (48601166S1) (SAE 4) (p. 175)	240^{+10}_{-50} ml ($8.12^{+0.34}_{-1.69}$ fl. oz_{US})
Oil capacity, right cartridge	
Fork oil (48601166S1) (SAE 4) (p. 175)	370 ml (12.51 fl. oz_{US})
Grease capacity, left cartridge	
Special grease (00062010053) (p. 176)	5 g (0.18 oz)

22.4.5 Technical data - fork (FX)

Fork part number	A590C179Y402000

Fork	**WP XACT**
Compression damping	
Comfort	17 clicks
Standard	12 clicks
Sport	7 clicks
Rebound damping	
Comfort	23 clicks
Standard	18 clicks
Sport	13 clicks
Spring length with preload spacer(s)	478 mm (18.82 in)
Spring rate	
Rider’s weight: 65 kg … 75 kg (143.3 lb … 165.3 lb)	4.6 N/mm (26.27 lb_f/in)
Rider’s weight: 75 kg … 85 kg (165.3 lb … 187.4 lb)	4.8 N/mm (27.41 lb_f/in)
Rider’s weight: 85 kg … 95 kg (187.4 lb … 209.4 lb)	5.0 N/mm (28.55 lb_f/in)
Fork length	940 mm (37.01 in)

22.4.6 Capacities - fork (FX)

Oil capacity, outer assembly	
Fork oil (48601166S1) (SAE 4) (p. 175)	390 ml (13.19 fl. oz_{US})
Oil capacity, cartridge	
Fork oil (48601166S1) (SAE 4) (p. 175)	175 ml (5.92 fl. oz_{US})

22.5 Shock absorber

22.5.1 Technical data - shock absorber (FC 450)

Shock absorber part number	A360C409Y408000

Shock absorber	WP XACT LDS
Low-speed compression damping	
Comfort	17 clicks
Standard	15 clicks
Sport	13 clicks
High-speed compression damping	
Comfort	2 turns (720°)
Standard	1.5 turns (540°)
Sport	1 turn (360°)
Rebound damping	
Comfort	17 clicks
Standard	15 clicks
Sport	13 clicks
Preload	8 mm (0.31 in)
Spring rate	
Weight of rider: 65 kg … 75 kg (143.3 lb … 165.3 lb)	42 N/mm (239.8 lb_f/in)
Weight of rider: 75 kg … 85 kg (165.3 lb … 187.4 lb)	45 N/mm (257.0 lb_f/in)
Weight of rider: 85 kg … 95 kg (187.4 lb … 209.4 lb)	48 N/mm (274.1 lb_f/in)
Spring length	240 mm (9.45 in)
Gas assisted	10 bar (145 psi)
Static sag	35 mm (1.38 in)
Rider sag	105 mm (4.13 in)

Installation position	456.3 mm (17.965 in)

22.5.2 Capacities - shock absorber (FC 450)

Oil capacity, shock absorber	
Shock absorber oil (50180751S1) (SAE 2.5) (p. 176)	Fill to the maximum mark

22.5.3 Technical data - shock absorber (FC 450 US)

Shock absorber part number	A360C459Y408000

Shock absorber	**WP XACT LDS**
Low-speed compression damping	
Comfort	17 clicks
Standard	15 clicks
Sport	13 clicks
High-speed compression damping	
Comfort	2 turns (720°)
Standard	1.5 turns (540°)
Sport	1 turn (360°)
Rebound damping	
Comfort	17 clicks
Standard	15 clicks
Sport	13 clicks
Preload	8 mm (0.31 in)
Spring rate	
Weight of rider: 65 kg … 75 kg (143.3 lb … 165.3 lb)	42 N/mm (239.8 lb_f/in)
Weight of rider: 75 kg … 85 kg (165.3 lb … 187.4 lb)	45 N/mm (257.0 lb_f/in)
Weight of rider: 85 kg … 95 kg (187.4 lb … 209.4 lb)	48 N/mm (274.1 lb_f/in)
Spring length	240 mm (9.45 in)
Gas assisted	10 bar (145 psi)
Static sag	35 mm (1.38 in)
Rider sag	105 mm (4.13 in)
Installation position	456.3 mm (17.965 in)

22.5.4 Capacities - shock absorber (FC 450 US)

Oil capacity, shock absorber	
Shock absorber oil (50180751S1) (SAE 2.5) (p. 176)	Fill to the maximum mark

22.5.5 Technical data - shock absorber (FX)

Shock absorber part number	A460C479Y408000

Shock absorber	WP XACT LDS
Low-speed compression damping	
Comfort	17 clicks
Standard	15 clicks
Sport	13 clicks
High-speed compression damping	
Comfort	2 turns (720°)
Standard	1.5 turns (540°)
Sport	1 turn (360°)
Rebound damping	
Comfort	17 clicks
Standard	15 clicks
Sport	13 clicks
Preload	8 mm (0.31 in)
Spring rate	
Weight of rider: 65 kg … 75 kg (143.3 lb … 165.3 lb)	42 N/mm (239.8 lb_f/in)
Weight of rider: 75 kg … 85 kg (165.3 lb … 187.4 lb)	45 N/mm (257.0 lb_f/in)
Weight of rider: 85 kg … 95 kg (187.4 lb … 209.4 lb)	48 N/mm (274.1 lb_f/in)
Spring length	240 mm (9.45 in)
Gas assisted	10 bar (145 psi)
Static sag	35 mm (1.38 in)
Rider sag	105 mm (4.13 in)
Installation position	456.3 mm (17.965 in)

22.5.6 Capacities - shock absorber (FX)

Oil capacity, shock absorber	
Shock absorber oil (50180751S1) (SAE 2.5) (p. 176)	Fill to the maximum mark

22.6 Tightening torque

22.6.1 Engine tightening torques

Screw, oil nozzle bent for piston cooling M4	2 Nm (1.5 ft·lb$_f$) **Loctite® 243**
Oil nozzle for the clutch lubrication (alternator cover sealing surface) M4	0.8 Nm (0.59 ft·lb$_f$)
Screw, gear position sensor M5×14	5 Nm (3.7 ft·lb$_f$) **Loctite® 243**
Oil nozzle for piston cooling M5	2 Nm (1.5 ft·lb$_f$) **Loctite® 243**
Detent arm screw M5	6 Nm (4.4 ft·lb$_f$) **Loctite® 243**
Screw, pressure pump cover M5×14	6 Nm (4.4 ft·lb$_f$) **Loctite® 243**
Screw, bearing retainer M5	6 Nm (4.4 ft·lb$_f$) **Loctite® 243**
Screw, suction pump cover M5×14	6 Nm (4.4 ft·lb$_f$) **Loctite® 243**
Stator screw M5	6 Nm (4.4 ft·lb$_f$) **Loctite® 2701**
Crankshaft speed sensor screw and cable retainer M5	6 Nm (4.4 ft·lb$_f$) **Loctite® 243**
Oil nozzle for timing chain lubrication M5	2 Nm (1.5 ft·lb$_f$) **Loctite® 243**
Screw, lock washer, oil pump idler gear M5×10	6 Nm (4.4 ft·lb$_f$) **Loctite® 243**
Screw, clutch adjusting ring M5×16	6 Nm (4.4 ft·lb$_f$)
Screws, main bearing lock washer, transmission bearings M5×12	6 Nm (4.4 ft·lb$_f$)

Nut, water pump impeller M6	6 Nm (4.4 ft·lb$_f$) **Loctite® 243**
Exhaust flange screw M6×16	10 Nm (7.4 ft·lb$_f$) **Loctite® 243**
Screw, torque governor M6	10 Nm (7.4 ft·lb$_f$) **Loctite® 243**
Screw, starter motor M6×25	10 Nm (7.4 ft·lb$_f$)
Screw, clutch cover M6	10 Nm (7.4 ft·lb$_f$)
Screw, engine case M6	10 Nm (7.4 ft·lb$_f$)
Screw, oil filter cover M6×16	10 Nm (7.4 ft·lb$_f$)
Shift star screw M6×30	10 Nm (7.4 ft·lb$_f$) **Loctite® 243**
Screw, shift lever M6×16	14 Nm (10.3 ft·lb$_f$) **Loctite® 243**
Timing chain-securing guide screw M6	10 Nm (7.4 ft·lb$_f$) **Loctite® 243**
Screw, timing chain tensioner M6	10 Nm (7.4 ft·lb$_f$)
Slide rail screw M6	10 Nm (7.4 ft·lb$_f$) **Loctite® 243**
Screw, valve cover M6	10 Nm (7.4 ft·lb$_f$)
Screw, clutch slave cylinder M6	10 Nm (7.4 ft·lb$_f$)
Screw, water pump cover M6×25	10 Nm (7.4 ft·lb$_f$) **Loctite® 243**
Screw, water pump cover M6×45	10 Nm (7.4 ft·lb$_f$)
Screw, balancer shaft fastening to water pump cover M6	10 Nm (7.4 ft·lb$_f$) **Loctite® 222**
Screw, ignition cover M6	10 Nm (7.4 ft·lb$_f$)
Screw, cylinder head M6×75	10 Nm (7.4 ft·lb$_f$)

Remaining screws, alternator cover M6		10 Nm (7.4 ft·lb$_f$)
Screw, rocker arm bearing M7×1		15 Nm (11.1 ft·lb$_f$)
Oil channel screw plug M7		9 Nm (6.6 ft·lb$_f$) **Loctite® 243**
Crankshaft clamp screw plug M8		10 Nm (7.4 ft·lb$_f$)
Screw plug, timing chain tensioner M8		8 Nm (5.9 ft·lb$_f$)
Coolant temperature sensor M10×1.25		12 Nm (8.9 ft·lb$_f$)
Front sprocket screw M10		60 Nm (44.3 ft·lb$_f$) **Loctite® 2701**
Oil channel screw plug M10		15 Nm (11.1 ft·lb$_f$) **Loctite® 243**
Screw, cylinder head M10×1.25 Engine oil	1.	Apply oil to collar and thread
	2.	10 Nm (7.4 ft·lb$_f$)
	3.	30 Nm (22.1 ft·lb$_f$)
	4.	50 Nm (36.9 ft·lb$_f$)
Spark plug M10×1		10 Nm … 12 Nm (7.4 ft·lb$_f$ … 8.9 ft·lb$_f$)
Screw, rotor M10×1		70 Nm (51.6 ft·lb$_f$)
Oil drain plug with magnet M12×1.5		20 Nm (14.8 ft·lb$_f$)
Screw plug, oil pressure control valve M12×1.5		20 Nm (14.8 ft·lb$_f$)
Screw plug, crankcase M16×1.5		15 Nm (11.1 ft·lb$_f$)
Nut, inner clutch hub M18×1.5		100 Nm (73.8 ft·lb$_f$)
Nut, primary gear wheel M18LH×1.5		120 Nm (88.5 ft·lb$_f$)
Plug, oil screen M20×1.5		15 Nm (11.1 ft·lb$_f$)
Screw plug, alternator cover M24×1.5		18 Nm (13.3 ft·lb$_f$)

22.6.2 Chassis tightening torques

Screw, hose clamp, throttle body	2.8 Nm (2.07 ft·lb$_f$)
Radiator hose clamp	2.4 Nm (1.77 ft·lb$_f$)
Screw, fixed grip M4	5 Nm (3.7 ft·lb$_f$) **Loctite® 243**
Screw, hose clamp to throttle body M4	5 Nm (3.7 ft·lb$_f$)
Screw, throttle body cover M5	2.6 Nm (1.92 ft·lb$_f$)
Remaining nuts on chassis M5	5 Nm (3.7 ft·lb$_f$)
Remaining screws on chassis M5	5 Nm (3.7 ft·lb$_f$)
Screw, shock absorber adjusting ring M5	5 Nm (3.7 ft·lb$_f$)
Screw, battery terminal M5	2.5 Nm (1.84 ft·lb$_f$)
Screw, frame protector M5	3 Nm (2.2 ft·lb$_f$)
Screws on muffler M5	5 Nm (3.7 ft·lb$_f$)
Screw, brake pedal stub M5	5 Nm (3.7 ft·lb$_f$) **Loctite® 243**
Nut, throttle cable on throttle body M6	3 Nm (2.2 ft·lb$_f$)
Screw, fender on triple clamp M6	12 Nm (8.9 ft·lb$_f$)
Screw, battery holding bracket M6	6 Nm (4.4 ft·lb$_f$)
Screw, starter cable to starter relay M6	6 Nm (4.4 ft·lb$_f$)
Screw, chain guide on swingarm, rear M6×16	10 Nm (7.4 ft·lb$_f$) **Loctite® 243**
Screw, hand lever M6	5 Nm (3.7 ft·lb$_f$)
Nut, starter cable on starter motor M6	4 Nm (3.0 ft·lb$_f$)
Remaining nuts on chassis M6	10 Nm (7.4 ft·lb$_f$)
Remaining screws on chassis M6	10 Nm (7.4 ft·lb$_f$)

Screw, rear brake disc M6	14 Nm (10.3 ft·lb$_f$) **Loctite® 243**
Screw, front brake disc M6	14 Nm (10.3 ft·lb$_f$) **Loctite® 243**
Screw, push rod ball joint on the rear brake cylinder M6	10 Nm (7.4 ft·lb$_f$) **Loctite® 243**
Screw, throttle twist grip M6	5 Nm (3.7 ft·lb$_f$)
Screw, chain sliding guard on link fork M6	6 Nm (4.4 ft·lb$_f$) **Loctite® 243**
Screw, fuel tank spoiler on radiator M6	6 Nm (4.4 ft·lb$_f$)
Screw, chain guide on swingarm, front M6×45	10 Nm (7.4 ft·lb$_f$)
Screw, ground wire on frame M6	10 Nm (7.4 ft·lb$_f$)
Screw, seat installation M6	8 Nm (5.9 ft·lb$_f$)
Brake line guide screw on swingarm M6	4.5 Nm (3.32 ft·lb$_f$) **Loctite® 243**
Screw, connector support incl. dashboard M6	5 Nm (3.7 ft·lb$_f$)
Screw, front sprocket cover M8	15 Nm (11.1 ft·lb$_f$)
Brake pedal stop nut M8	20 Nm (14.8 ft·lb$_f$)
Nut, rear sprocket screw M8	35 Nm (25.8 ft·lb$_f$) **Loctite® 2701**
Nut, rim lock M8	12 Nm (8.9 ft·lb$_f$)
Remaining nuts on chassis M8	25 Nm (18.4 ft·lb$_f$)
Remaining screws on chassis M8	25 Nm (18.4 ft·lb$_f$)
Screw, front brake caliper M8	25 Nm (18.4 ft·lb$_f$) **Loctite® 243**
Screw, top triple clamp M8	17 Nm (12.5 ft·lb$_f$)
Screw, bottom triple clamp M8	12 Nm (8.9 ft·lb$_f$)

Screw, fork shoe M8	15 Nm (11.1 ft·lb$_f$)
Screw, upper steering stem M8	20 Nm (14.8 ft·lb$_f$) Loctite® 243
Handlebar clamp screw M8	20 Nm (14.8 ft·lb$_f$)
Subframe screw M8	35 Nm (25.8 ft·lb$_f$) Loctite® 243
Screw, chain slider M8	15 Nm (11.1 ft·lb$_f$)
(FX) Screw, side stand bracket M8	33 Nm (24.3 ft·lb$_f$) Loctite® 2701
Screw, manifold on engine brace M8	15 Nm (11.1 ft·lb$_f$)
Screw, subframe, bottom M8	30 Nm (22.1 ft·lb$_f$) Loctite® 2701
Bushing, brake pedal M10	45 Nm (33.2 ft·lb$_f$)
Engine bracket screw M10	60 Nm (44.3 ft·lb$_f$)
Remaining nuts on chassis M10	45 Nm (33.2 ft·lb$_f$)
Remaining screws on chassis M10	45 Nm (33.2 ft·lb$_f$)
Top shock absorber screw M10	60 Nm (44.3 ft·lb$_f$) Loctite® 2701
Bottom shock absorber screw M10	60 Nm (44.3 ft·lb$_f$) Loctite® 2701
Screw, handlebar mount M10	40 Nm (29.5 ft·lb$_f$) Loctite® 243
Nut, frame on linkage lever M14×1.5	60 Nm (44.3 ft·lb$_f$)
Nut, linkage lever on angle lever M14×1.5	60 Nm (44.3 ft·lb$_f$)
Nut, angle lever to link fork M14×1.5	60 Nm (44.3 ft·lb$_f$)
Nut, swingarm pivot M16×1.5	100 Nm (73.8 ft·lb$_f$)
Screw, wheel spindle, front M20×1.5	35 Nm (25.8 ft·lb$_f$)

Screw, top steering head M20×1.5	12 Nm (8.9 ft·lb$_f$)
Nut, wheel spindle, rear M22×1.5	80 Nm (59.0 ft·lb$_f$)
Screw-in nozzle, cooling system M24×1.5	7.5 Nm (5.53 ft·lb$_f$)
Spoke nipple, rear wheel M4,5	6 Nm (4.4 ft·lb$_f$)
Spoke nipple, front wheel M4,5	6 Nm (4.4 ft·lb$_f$)
Combination switch screw EJOT PT® – K50×18	2 Nm (1.5 ft·lb$_f$)
Screw, intake air temperature sensor EJOT PT® – K50×18	0.7 Nm (0.52 ft·lb$_f$)
Screw, start button/kill switch EJOT PT® – K50×18	2 Nm (1.5 ft·lb$_f$)
Screw, air filter box cover EJOT PT® – K60×20 – Z	5 Nm (3.7 ft·lb$_f$)
Screw, seat installation EJOT EJOFORM® – K60×23/18	2.5 Nm (1.84 ft·lb$_f$)
Screw, fuel pump on fuel tank EJOT PT® – K60×30 – Z	2.5 Nm (1.84 ft·lb$_f$)
Remaining screws on chassis EJOT PT® – K60×25 – Z	2 Nm (1.5 ft·lb$_f$)
Screw, air filter box, on subframe EJOT PT® – K60×20 – AL	5 Nm (3.7 ft·lb$_f$)

23.1 Recycling

I02045-10

Further information is available at the following website.
Recycling information website: https://www.quefairedemesdechets.fr

24 Relevant documents

24.1 Declaration of conformity

DocuSign Envelope ID: 3F1812FB-C95E-4CB7-B48D-2C0F03A6BEDF

DECLARATION OF CONFORMITY

Kind of equipment: **Connectivity Unit for KTM vehicles**
Type-designation: **Connectivity Unit Offroad**
Type number: **A46014086010**
A46014087020

Manufacturer or
Authorised representative: KTM AG
Address: Stallhofnerstrasse 3
5230 Mattighofen, Austria

This declaration of conformity is issued under the sole responsibility of the manufacturer.

The object of the declaration described above is in conformity with the relevant statutory requirements:

- **Directive 2014/53/EU**

The product is in conformity with the following standards:

- Health and safety (Article 3. (1)(a)):

EN 62368-1:2014 / A11:2017
EN 62311:2009-09

- Radio (Article 3. (2)):

EN 300 328 V2.2.2:2019
EN 303 413 V1.2.1:2021

- EMC (Article 3. (1)(b)):

EN 301 489-1 V2.2.3:2019
EN 301 489-17 V3.2.4:2020
EN 301 489-19 V2.2.1:2022
EN 55032:2015/A11:2020
ECE R10.06

Signed for and on behalf of: KTM AG

Mattighofen, Austria
15.03.2023

DocuSigned by:
2114E1C78AF442F...

DocuSigned by:
F9A4FB06188149A...

place and date of issue

Viktor Sigl
CFO
KTM AG

Philipp Habsburg
CTO
KTM AG

24.2 Declaration of conformity (UK)

DocuSign Envelope ID: 3F1812FB-C95E-4CB7-B48D-2C0F03A6BEDF

UK DECLARATION OF CONFORMITY

Kind of equipment: **Connectivity Unit for KTM vehicles**
Type-designation: **Connectivity Unit Offroad**
Type number: **A46014086010**
A46014087020

Manufacturer or
Authorised representative: KTM AG
Address: Stallhofnerstrasse 3
5230 Mattighofen, Austria

This declaration of conformity is issued under the sole responsibility of the manufacturer.

The object of the declaration described above is in conformity with the relevant statutory requirements:

- **Radio Equipment Regulations 2017 (S.I. 2017/1206)**

The product is in conformity with the following standards:

- Health and safety (Regulation 6.(1)(a)):

EN 62368-1:2014 / A11:2017
EN 62311:2009-09

- Radio (Regulation 6. (2)):

EN 300 328 V2.2.2:2019-07
EN 303 413 V1.2.1:2021/04

- EMC (Regulation 6.(1)(b)):

EN 301 489-1 V2.2.3:2019
EN 301 489-17 V3.2.4:2020
EN 301 489-19 V2.2.1:2022
EN 55032:2015/A11:2020
ECE R10.06

Signed for and on behalf of: KTM AG

Mattighofen, Austria
15.03.2023

DocuSigned by:
2114E1C78AF442F...

DocuSigned by:
F9A4FB06188149A...

place and date of issue	Viktor Sigl CFO KTM AG	Philipp Habsburg CTO KTM AG

A Technical terms

	Launch control	Vehicles electronics functions for achieving the best possible acceleration from a standing position
OBD	On-board diagnosis	Vehicle system, which monitors the specified parameters of the vehicle electronics
	Quickshifter	Function of the engine electronics for shifting up without clutch actuation

B Fuels

Super unleaded

Standards	
• ROZ 95	→ DIN EN 228

Fuel additive

Recommended supplier
MOTOREX®
• FUEL STABILIZER

C Operating material

Off-road chain spray

Recommended supplier

MOTOREX®
- CHAINLUBE OFF ROAD

Fork oil

Order details

- 48601166S1

Standards

- SAE 4 → SAE

Universal oil spray

Recommended supplier

MOTOREX®
- JOKER 440 SYNTHETIC

Long-life grease

Recommended supplier

MOTOREX®
- Bike Grease 2000

Engine oil

Recommended supplier

MOTOREX®
- CROSS POWER 4T

Standards

→ JASO T903 MA2

- 10W/50 → SAE

Properties

- fully synthetic

High viscosity grease

Recommended supplier

SKF®
- LGHB 2

Silicone spray

Recommended supplier
MOTOREX® • SILICONE SPRAY

Special grease

Order details
• 00062010053
Recommended supplier
Klüber Lubrication® • Klüberfood NH1 34-401

Shock absorber oil

Order details	
• 50180751S1	
Standards	
• SAE 2.5	→ SAE

Oil for foam air filter

Recommended supplier
MOTOREX® • RACING BIO AIR FILTER OIL

Brake fluid DOT 5.1

Recommended supplier
MOTOREX® • BRAKE FLUID DOT 5.1
Standards
→ DOT

Coolant

Recommended supplier	
MOTOREX® • COOLANT M3.0	
Properties	
• Antifreeze protection to at least	−25 °C (−13.0 °F)

D Electrics

12-V battery (HJTZ5S-FP-C)

Product code	
• HJTZ5S-FP-C	
Properties	
• Lithium-ion battery	
• Battery voltage	12 V
• Nominal capacity	2.0 Ah
• Maintenance-free	

Dashboard illumination and indicator lights (LED)

Product code
• LED

Fuse (58011109110)

Product code
• 58011109110
Properties
• 10 A

Fuse (58011109105)

Product code
• 58011109105
Properties
• 5 A

E Cleaning agents

Chain cleaner

Recommended supplier

MOTOREX®

- CHAIN CLEAN

Preserving materials

Recommended supplier

MOTOREX®

- MOTO PROTECT

Air filter cleaning agent

Recommended supplier

MOTOREX®

- RACING BIO AIR FILTER CLEANER

Cleaning agents for plastics, glass, lacquers, metals, windshields and visors

Recommended supplier

MOTOREX®

- QUICK CLEANER

Environmentally neutral universal cleaning agent

Recommended supplier

MOTOREX®

- MOTO CLEAN UNIVERSAL

F Icons

F.1 Symbol colors

F.1.1 Yellow and orange symbols

Yellow and orange symbols indicate a malfunction status that requires prompt intervention. Active driving aids are also represented by yellow or orange symbols.

Fi	Failure indicator light lights up or flashes orange. The malfunction indicator lamp also lights up if traction control is activated and the speed limiter intervenes.
TC	TC indicator light lights up orange.

F.1.2 Green and blue symbols

Green and blue symbols convey information.

	Indicator light Ⓑ lights up green.
QS	Indicator light lights up blue.

1

12 V battery
charging 119
removing 117

12 V battery
installation 118

A

Air filter
cleaning 81
installing 80
removing 79

Air filter box
cleaning 81

Air filter box cover
installation 78
removing 77
securing 81

Auxiliary substances 14

B

Battery 154

Brake discs
checking 99

Brake fluid
adding front brake 101
adding to rear brake 107

Brake fluid level
checking on front brake 100
checking on rear brake 106

Brake lining retainers
checking on front brake 102
checking on rear brake 108

Brake pad
checking on front brake 102

Brake pads
changing on the rear brake 108
checking on rear brake 108
of the front brake, changing 103

Brake pedal
adjusting the basic position 105
checking the free travel 105

C

Chain
checking 91
cleaning 89

Chain guide
checking 91

Chain tension
adjusting 90
checking 90

Characteristic map of the throttle response
adjusting 130

Checking basic chassis setting with
rider's weight 44

Clutch
changing fluid 97
checking/correcting fluid level 96

Clutch lever
adjusting the basic position 96

Compression damping
adjusting the fork 55

Coolant
antifreeze and coolant level, checking 124
draining 126
level, checking 125
refilling 126

Customer service 15

D

Defined use 12

Difficult operating conditions 30
dry sand 30
high temperatures 32
low temperature 32
muddy surfaces 32
slow speed 32
snow 32
wet sand 31
wet surfaces 32

E

Engine
running in 29

Engine number 18

Engine oil
adding 140
changing 137

Engine oil level
checking 136

Engine sprocket
checking 91

Environment 12

F

Figures 14

Fork legs
- adjusting the air pressure 53
- adjusting the rebound damping 56
- bleeding 61
- checking basic setting 53
- cleaning the dust boots 62
- compression damping, adjusting 55
- installation 65
- removing 65

Fork protector
- installation 63
- removing 62

Frame
- checking 94

Frame label 18

Frame protector
- installation 63
- removing 63

Front fender
- installation 73
- removing 72

Front wheel
- installing 112
- removing 111

Frost protection
- checking 124

Fuel screen
- changing 135

Fuel tank
- installation 87
- removing 85

Fuel tank cap
- closing 24
- opening 23

Fuse
- changing the main fuse 121
- of the fuel pump, changing 122

G

Gear shift lever
- adjusting the basic position 134
- checking the basic position 134

H

Handbrake lever
- adjusting the basic position 99
- checking the free travel 99

Handlebar position
- adjusting 57

High-speed compression damping
- adjusting the shock absorber 46

I

idle speed
- adjusting 132

Implied warranty 14

Improper use 13

Intended use 12

L

Launch control
- activating 34

Lower triple clamp
- installation 67
- removing 66

Low-speed compression damping
- adjusting the shock absorber 45

M

Main fuse
- changing 121

Manufacturer's warranty 14

Mapping
- changing 132

Motorcycle
- cleaning 142
- raising with lift stand 60
- removing from lift stand 60

Muffler
- changing damping material 84
- installation 84
- removing 83

N

Number plate
- installation 72
- removing 72

O

Oil filter
- changing 137

Oil screens
- cleaning 137

Owner's manual 12

P

Preparing for use
after storage 145
checks and maintenance measures when preparing for use 33
notes on preparing for first use 28

Protective clothing 11

Q

Quickshifter
activating 36
programming 96

R

Rear sprocket
checking 91

Rear wheel
installation 113
removing 112

Rebound damping
adjusting the fork 56
adjusting the shock absorber 47

Recycling 167

Refueling
fuel 40

Resources 14

Rider sag
adjusting 52

Rubber grips
checking 95

S

Safe use 11

Seat
mounting 77
removing 76

Service 14

Shock absorber
adjusting the high-speed compression damping 46
adjusting the low-speed compression damping 45
adjusting the rebound damping 47
adjusting the spring preload 50
checking static sag 49
checking the rider sag 49
installation 75
removing 73

Side fairing right
installation 83
removing 82

Skid plate
installation 64
removing 64

Spare parts 14

Spoke tension
checking 116

Starting 33

Steering head bearing
lubricating 71

Steering head bearing play
adjusting 71
checking 70

Storage 144

Swingarm
checking 94

T

Tampering 10
Technical Accessories 14

Throttle cable play
adjusting 129
checking 129

Throttle cable routing
checking 94

Throttle valve position
programming 133

Tire condition
checking 114

Tire pressure
checking 115

Traction control
activating 35

Transportation 39

V

Vehicle identification number 18
VIN 18

W

Work rules 11

3402948en

18/09/2026

Husqvarna Mobility GmbH
Stallhofnerstraße 3 | 5230 Mattighofen