Owner's manual **2027**

Husqvarna

Norden 901
Norden 901 Expedition

Item no.: 3402920en

FOR | PIONEERS

Dear Husqvarna Mobility-customer,

Congratulations on your decision to purchase a Husqvarna motorcycle. You are now the owner of a state-of-the-art sports vehicle which, with proper care, will bring you pleasure for a long time to come.

We hope you enjoy your bike and have a safe journey at all times!

You can enter the serial numbers of your vehicle below to find the serial numbers more quickly if required:

Vehicle identification number (p. 20)	Stamp of the contractual partner
Engine number (p. 21)	

The owner's manual contained the latest information for this model series at the time of publication. However, minor differences due to further developments in design cannot be ruled out completely.

All specifications contained herein are non-binding. Husqvarna Mobility GmbH specifically reserve the right to modify or delete technical specifications, prices, colors, forms, materials, services, designs, equipment, etc. without prior notice and without specifying reasons, to adapt these to local conditions, as well as to stop production of a particular model without prior notice. Husqvarna accepts no liability for delivery options, deviations from figures and descriptions, as well as misprints and other errors. The models portrayed partly contain special equipment that does not belong to the regular scope of supply.

© 2026 Husqvarna Mobility GmbH, Mattighofen Austria
All rights reserved. Figures: Mitterbauer / Visus Studios / KISKA / Husqvarna Mobility
Written permission from the copyright owner is required before any duplication or reproduction.

ISO 9001

Husqvarna Mobility GmbH applies quality assurance processes that lead to the highest possible product quality as defined in the ISO 9001 international quality management standard.

12 100 6061

REG.NO. 12 100 6061

Issuing institution:
TÜV SÜD Management Service GmbH

Husqvarna Mobility GmbH
Stallhofnerstraße 3
5230 Mattighofen, Austria

This document is valid for:

Norden 901 US (F2875127)

Norden 901 Expedition US (F2875227)

3402920en

13/04/2026

Table of contents

1 Means of representation 9
1.1 Conventions 9
1.1.1 Icons 9
1.1.2 Formatting 9
1.1.3 Abbreviations 9
2 Safety 10
2.1 Safety instructions 10
2.2 Consumer rights 10
2.3 Operating noise warning 10
2.4 Manufacturer warranty for the exhaust monitoring system 11
2.5 Noise emission warranty 11
2.6 Reporting safety defects 12
2.7 Ban on tampering 12
2.8 Safe use 12
2.9 Protective clothing 13
2.10 Work rules 13
2.11 Environment 13
2.12 Owner's manual 14
2.13 Use definition – intended use 14
2.14 Improper use 14
2.15 Safety markings on the motorcycle 15
2.15.1 Overview of labels 15
2.15.2 Label in detail 15
3 Important notes 17
3.1 Manufacturer's warranty, implied warranty 17
3.2 Auxiliary material, operating material 17
3.3 Spare parts, technical accessories 17
3.4 Service 17
3.5 Figures 17
3.6 Customer service 17
4 View of the vehicle 18
4.1 View of vehicle, front left (example) 18
4.2 View of vehicle, rear right (example) 19
5 Serial number 20
5.1 Vehicle identification number 20
5.2 Type approval label 20
5.3 Key number 20
5.4 Engine number 21
5.5 Fork part number 21
5.6 Shock absorber part number 21
5.7 Steering damper article number 21
6 Controls 22
6.1 Clutch lever 22
6.2 Handbrake lever 22
6.3 Throttle grip 22
6.4 Switches on the left side of the handlebar 22
6.4.1 Combination switch 22
6.4.2 Light switch 23
6.4.3 Cruise control system tip switch 23
6.4.4 Menu buttons 24
6.4.5 Turn signal switch 24
6.4.6 Horn button 25
6.5 Switches on the right side of the handlebar 25
6.5.1 Start button/kill switch 25
6.6 Ignition and steering lock 26
6.7 Locking the steering 26
6.8 Unlocking the steering 26
6.9 Supplementary headlight switch 27
6.10 Socket for electrical accessories 27
6.11 USB-C socket 27
6.12 Opening the fuel tank cap 27
6.13 Closing the fuel tank cap 28
6.14 Fuel petcocks 29
6.15 Opening the storage compartment on the left 29
6.16 Closing the storage compartment on the left 30
6.17 Opening the storage compartment on the right 30
6.18 Closing the storage compartment on the right 31
6.19 On-board tool kit 32
6.20 Grab handles 32
6.21 Luggage rack plate 32
6.22 Seat lock 32
6.23 Passenger footpegs 33
6.24 Gear shift lever 33
6.25 Brake pedal 33
6.26 Side stand 34
6.27 Center stand (Norden 901 Expedition) 34
7 dashboard 35
7.1 Dashboard 35
7.2 activation and testing 36
7.2.1 Activation 36
7.2.2 Test 36
7.3 warnings 36
7.4 ice warning 37

7.5 indicator lamps ... 37
7.6 Display ... 39
7.7 Explorer display (optional) ... 39
7.8 speed ... 40
7.9 shift light ... 41
7.10 speed display ... 42
7.11 Cruise control indicator ... 42
7.12 time ... 42
7.13 ambient air temperature indicator ... 43
7.14 **Ride-Mode** display ... 43
7.15 **ABS** display ... 43
7.16 **MTC** display ... 43
7.17 coolant temperature indicator ... 44
7.18 fuel level display ... 44
7.19 heated grip (optional) ... 45
7.20 Front rider's seat heating (optional) ... 45
7.21 **Favorites** display ... 45
7.22 **Navigation** display ... 45
7.23 **Call** display ... 46
7.24 Menu ... 46
7.24.1 **Motorcycle** ... 46
7.24.2 **Ride Mode** ... 47
7.24.3 **ABS mode** ... 48
7.24.4 **MTC + MSR** ... 48
7.24.5 **Easy Shift** ... 49
7.24.6 **Heating** (optional) ... 49
7.24.7 **Heating Grips** (optional) ... 49
7.24.8 **Heating Rider Seat** (optional) ... 50
7.24.9 **Interface** ... 50
7.24.10 **Throttle** (optional) ... 50
7.24.11 **Slip Adjuster** (optional) ... 51
7.24.12 **Bike info** ... 51
7.24.13 **Bike info** ... 51
7.24.14 **Trip info** ... 52
7.24.15 **Trip 1** ... 52
7.24.16 **Trip 2** ... 53
7.24.17 **Navigation** ... 53
7.24.18 Last search (optional) ... 54
7.24.19 Favorites (optional) ... 54
7.24.20 Skip Waypoint (optional) ... 55
7.24.21 Volume (optional) ... 56
7.24.22 Stop Navigation (optional) ... 56
7.24.23 **Audio** (optional) ... 57
7.24.24 Call out ... 58
7.24.25 **Settings** ... 58
7.24.26 **favorites** ... 58
7.24.27 **Favorites-display 1 - 4** ... 58
7.24.28 **Quick selector up** ... 59
7.24.29 **Quick selector down** ... 59
7.24.30 **Ride Husqvarna** (optional) ... 59
7.24.31 **Bluetooth** (optional) ... 60
7.24.32 **Phone Pairing** (optional) ... 60
7.24.33 **Riders Headset** (optional) ... 61
7.24.34 **Headset Type** (optional) ... 62
7.24.35 **Shift Light** ... 62
7.24.36 **Shift light state** ... 62
7.24.37 **Shift light RPM1** ... 63
7.24.38 **Shift light RPM2** ... 63
7.24.39 **Clock & date** ... 63
7.24.40 **Clock format** ... 64
7.24.41 **Date format** ... 64
7.24.42 **Units** ... 64
7.24.43 **Distance** ... 64
7.24.44 **Temperature** ... 65
7.24.45 **Pressure** ... 65
7.24.46 **Consumption** ... 65
7.24.47 **Language** ... 66
7.24.48 **Extra Functions** ... 66
7.24.49 Setting the time and date ... 66

8 Ergonomics ... 68

8.1 Setting the front rider's seat ... 68
8.2 Handlebar position ... 68
8.3 Adjusting the handlebar position 🔧 ... 69
8.4 Adjusting the basic position of the clutch lever ... 69
8.5 Adjusting the basic position of the hand brake lever ... 70
8.6 Adjusting foot brake lever stub ... 71
8.7 Adjusting the basic position of the brake pedal 🔧 ... 71
8.8 Checking the basic position of the gear shift lever ... 72
8.9 Adjusting the basic position of the gear shift lever 🔧 ... 72

9 Preparing for use ... 74

9.1 Notes on preparing for first use ... 74
9.2 Running in the engine ... 75
9.3 Loading the vehicle ... 75

10 Riding instructions ... 77

10.1 checks and maintenance measures when preparing for use ... 77
10.2 Starting the vehicle ... 77
10.3 Starting off ... 78
10.4 Easy Shift ... 79
10.5 Shifting, riding. ... 79
10.6 **ETTC** ... 82

Table of contents

10.7 Braking 82
10.8 Stop, park 83
10.9 Transportation 84
10.10 Towing in the event of a breakdown 85
10.11 Refueling 85

11 Service schedule 87

11.1 Service work 87

12 Tuning the chassis 89

12.1 Fork/shock absorber 89
12.2 Adjusting the compression damping of the fork 89
12.3 Adjusting the rebound damping of the fork 90
12.4 Adjusting the spring preload of the fork **(Norden 901 Expedition)** 91
12.5 Compression damping of the shock absorber **(Norden 901 Expedition)** 92
12.6 Adjusting the low-speed compression damping of the shock absorber **(Norden 901 Expedition)** 92
12.7 Adjusting the high-speed compression damping of the shock absorber **(Norden 901 Expedition)** 93
12.8 Adjusting the rebound damping of the shock absorber 93
12.9 Adjusting the spring preload of the shock absorber 94

13 Service work on the chassis 96

13.1 Raising the motorcycle with rear lifting gear 96
13.2 Removing the rear of the motorcycle from the lifting gear 96
13.3 Lifting the motorcycle with the front lifting gear 96
13.4 Taking the motorcycle off the front lifting gear 97
13.5 Raising the vehicle with the center stand **(Norden 901 Expedition)** 98
13.6 Removing the vehicle from the center stand **(Norden 901 Expedition)** 98
13.7 Removing the passenger seat 99
13.8 Mounting the passenger seat 99
13.9 Remove the front rider's seat 99
13.10 Mounting the front rider's seat 100
13.11 Checking the chain for dirt 100
13.12 Cleaning the chain 100
13.13 Checking the chain tension 101
13.14 Adjusting the chain tension 102
13.15 Checking the chain, rear sprocket, front sprocket, and chain guide 103
13.16 Removing the side bag rack **(Norden 901 Expedition)** 105
13.17 Fitting the side bag rack **(Norden 901 Expedition)** 106
13.18 Removing the side bags **(Norden 901 Expedition)** 109
13.19 Fitting the side bags **(Norden 901 Expedition)** 110
13.20 Removing the left side cover 111
13.21 Installing the left side cover 111
13.22 Removing the right side cover 112
13.23 Installing the right side cover 112
13.24 Removing the battery cover 113
13.25 Installing the battery cover 113
13.26 Removing the center fuel tank spoiler 114
13.27 Installing the center fuel tank spoiler 114
13.28 Removing left fuel tank spoiler 114
13.29 Installing the left fuel tank spoiler 115
13.30 Removing the right fuel tank spoiler 116
13.31 Installing the right fuel tank spoiler 117
13.32 Removing the front top fender 118
13.33 Installing the front top fender 118
13.34 Cleaning the dust boots of the fork legs 119
13.35 Removing the windshield 119
13.36 Installing the windshield 120
13.37 Removing left fuel tank cover 120
13.38 Installing the left fuel tank cover 121
13.39 Removing right fuel tank cover 121
13.40 Installing the right fuel tank cover 122
13.41 Removing the skid plate 122
13.42 Installing the skid plate 124

14 Brake system 126

14.1 Anti-lock braking system 126
14.2 Checking the brake discs 127
14.3 Checking the brake fluid level for the front brake 128
14.4 Adding brake fluid for the front brake 128
14.5 Checking that the brake pads of the front brake are secured 130
14.6 Checking the free travel of the brake pedal 130

14.7 Checking the brake fluid level for the rear brake ... 131
14.8 Adding brake fluid for the rear brake ... 131
14.9 Checking that the brake pads of the rear brake are secured ... 132

15 Wheels, tires ... 134

15.1 Removing the front wheel ... 134
15.2 Installing the front wheel ... 135
15.3 Removing the rear wheel ... 137
15.4 Installing the rear wheel ... 138
15.5 Checking the rear hub damping rubber pieces ... 139
15.6 Checking the tire condition ... 140
15.7 Checking the tire pressure ... 142
15.8 Checking the spoke tension ... 142
15.9 Tubeless tire system ... 143
15.10 Using tire repair spray ... 143

16 Electrics ... 145

16.1 Removing the 12 V battery ... 145
16.2 Installing the 12 V battery ... 146
16.3 Charging the 12 V battery ... 148
16.4 Changing the main fuse ... 149
16.5 Changing the ABS fuses ... 150
16.6 Changing the fuses of individual electrical power consumers ... 152
16.7 Checking the headlight setting ... 153
16.8 Adjusting the headlight range ... 153
16.9 Checking the supplementary headlight setting ... 154
16.10 Adjusting the supplementary headlight range ... 155
16.11 Diagnostic connector ... 155
16.12 Front ACC1 and ACC2 ... 156
16.13 Rear ACC1 and ACC2 ... 156

17 Cooling system ... 157

17.1 Cooling system ... 157
17.2 Checking the coolant level in the compensating tank ... 157
17.3 Correcting the coolant level in the compensating tank ... 158

18 Tuning the engine ... 160

18.1 **Ride Mode** ... 160
18.2 Motorcycle traction control ... 160
18.3 slip adjustment (optional) ... 160
18.4 **Throttle** (optional) ... 161

19 Service work on the engine ... 162

19.1 Checking the engine oil level ... 162
19.2 Changing the engine oil and oil filter, cleaning the oil screens ... 162
19.3 Adding engine oil ... 164
19.4 Checking the free travel of the clutch lever ... 165
19.5 Adjusting the free travel of the clutch lever ... 165

20 Cleaning, care ... 166

20.1 Cleaning the motorcycle ... 166
20.2 Checks and maintenance steps for winter operation ... 167

21 Storage ... 169

21.1 Storage ... 169
21.2 Preparing for use after storage ... 170

22 Troubleshooting ... 171

22.1 Troubleshooting ... 171

23 Technical specifications ... 173

23.1 Engine ... 173
23.1.1 Technical data - engine ... 173
23.2 Chassis ... 174
23.2.1 Technical data - chassis ... 174
23.2.2 Technical data - tires ... 176
23.2.3 Fuel capacity ... 176
23.3 Electrics ... 176
23.3.1 Battery ... 176
23.3.2 Fuses ... 176
23.3.3 Lamps ... 176
23.4 Fork ... 177
23.4.1 Technical data - fork **(Norden 901)** ... 177
23.4.2 Capacities - fork **(Norden 901)** ... 177
23.4.3 Technical data - fork **(Norden 901 Expedition)** ... 177
23.4.4 Capacities - fork **(Norden 901 Expedition)** ... 178
23.5 Shock absorber ... 178
23.5.1 Technical data - shock absorber **(Norden 901)** ... 178
23.5.2 Capacities - shock absorber **(Norden 901)** ... 179
23.5.3 Technical data - shock absorber **(Norden 901 Expedition)** ... 179
23.5.4 Capacities - shock absorber **(Norden 901 Expedition)** ... 180

Table of contents

23.6 Tightening torque 180
23.6.1 engine tightening torques 180
23.6.2 Chassis tightening torques 185

24 Declarations of conformity 194

24.1 Declarations of conformity 194
24.2 Country-specific declarations of conformity 194

25 Recycling 195

25.1 Recycling 195

Notes 197

A Technical terms 197

B Fuels 198

C Operating supplies 199

D Electrics 201

E Cleaning agents 203

F Icons 204

F.1 Symbol colors 204
F.1.1 Red symbols 204
F.1.2 Yellow and orange symbols 204
F.1.3 Green and blue symbols 204

Index 205

1.1 Conventions

1.1.1 Icons

✓	Indicates a desired result (e.g. of a work step or a function).
✗	Indicates an undesired result (e.g. of a work step or a function).
	All work marked with this symbol requires specialist knowledge and technical understanding. Ensure that this work is carried out or supervised by trained personnel from an authorized contractual partner, and that any special tools required are used.
	Indicates a page reference.
	Indicates information with more details.
	Indicates a tip, e.g. to simplify work.
»	Indicates the result from a test step.
◀	Indicates the end of an activity, including any rework.

1.1.2 Formatting

Proprietary name	Indicates a proprietary name.
Name ®	Indicates a protected name.
Brand ™	Indicates a brand available on the open market.
Underlined terms	Refer to technical details of the vehicle or indicate technical terms that are explained in the glossary.

1.1.3 Abbreviations

2-pc.	two-part
Part no.	Part number
or	respectively
approx.	circa
etc.	et cetera
poss.	possibly/possible
if necessary	if necessary
cmpl.	complete
min.	at least
no.	number
no fig.	no figure
s.	see
among others	among others/not limited to
and the like	and the like
etc.	et cetera
cf.	compare
e.g.	for example

2.1 Safety instructions

Function of the safety instruction

Safety instruction brings attention to dangers when handling the product. Hazards are classified, named, described, and supplemented with information on how to avoid them.

- If there is a safety instruction before a list of instructions, the danger exists throughout the entire activity.
- If there is a safety instruction immediately before an instruction, the next step presents a danger.

Safety instruction layout

All safety instructions are identified by a signal word and a warning symbol. The combination of signal word and warning symbol determines the degree of danger.

DANGER
Indicates an imminent danger that leads to serious injury or death.

WARNING
Indicates a potentially imminent danger that could lead to serious injury or death.

CAUTION
Indicates a potentially imminent danger that can lead to minor or slight injuries.

NOTE
Indicates a situation that can lead to damage to the product or the product environment.

NOTE
Indicates a situation that can lead to environmental damage.

2.2 Consumer rights

Warranty claims must be made to an authorized dealer. If you are not satisfied, please contact:

Husqvarna Mobility North America, Inc., c/o KTM North America, Inc., Customer Support, 1119 Milan Ave., Amherst, OH 44001, USA

Phone: (440) 985–3553

Husqvarna Mobility North America, Inc., c/o KTM Canada, Inc., 8701 Rue Samuel-Hatt, Chambly, QC J3L 6V4, Canada

Phone: (450) 441–4451

www.husqvarna-motorcycles.com

Different rights may apply, according to national or regional legislation.

2.3 Operating noise warning

This product should be checked for necessary repair or replacement parts if the motorcycle noise has increased significantly through use. Otherwise, the owner may become subject to penalties under the applicable ordinances.

2.4 Manufacturer warranty for the exhaust monitoring system

Husqvarna Mobility North America, Inc., c/o KTM Canada, Inc., 8701 Rue Samuel-Hatt, Chambly, QC J3L 6V4, Canada warrants that, at the time of sale, the exhaust monitoring system meets all applicable standards set by the US Environmental Protection Authority (EPA) and the California Air Resources Board (CARB).

This manufacturer warranty applies in respect of the first owner of the motorcycle and all subsequent owners.

Your exhaust monitoring system may include parts, such as the fuel injection system, ignition, catalytic converter, control units, hoses, connectors and other emission related assemblies, fuel tank, crankcase breather, fuel tank lid for vehicles with fuel evaporation monitoring, oil filler cap, pressure control valve, fuel/vapor separator, canister, ignition coils, ignition wire, capacitors and spark plugs, if a fault occurs before the first scheduled replacement; it may also include the hoses, fittings, and pipes that are used directly in these components.

If the warranty conditions are met, Husqvarna Mobility will repair your motorcycle for you free of charge, including diagnosis, parts and labor.

As the owner of the motorcycle, you are responsible for the required maintenance specified in the Owner's Manual.

Please note that Husqvarna Mobility is entitled to reject warranty claims if your motorcycle or a part fails due to misuse, negligence, an accident, participation in racing or similar events, improper service work, or unauthorized modifications.

Scope of the manufacturer's warranty

- Five (5) years or 30,000 kilometers (18,641 miles), whichever occurs first.

If you have any questions regarding the manufacturer warranty for the exhaust monitoring system, please address these to:

Husqvarna Mobility North America, Inc., c/o KTM North America, Inc., Customer Support, 1119 Milan Ave., Amherst, OH 44001, USA

Phone: (888) 985-6090

U.S. Environmental Protection Agency, 2000 Traverwood Drive, Ann Arbor, MI 48105, USA

California Air Resources Board, 1001 "I" Street, Sacramento, CA 95814, USA

2.5 Noise emission warranty

Husqvarna Mobility warrants that this exhaust system, at the time of sale, meets all applicable US EPA noise standards.

This manufacturer's warranty extends to the first person who purchases this exhaust system for purposes other than resale, and to all subsequent buyers.

Warranty claims should be directed to:

Husqvarna Mobility North America, Inc., c/o KTM North America, Inc., Customer Support, 1119 Milan Ave., Amherst, OH 44001, USA

Phone: (440) 985–3553

www.husqvarna-motorcycles.com

Husqvarna Mobility North America, Inc., c/o KTM Canada, Inc., 8701 Rue Samuel-Hatt, Chambly, QC J3L 6V4, Canada

Phone: (450) 441–4451

www.husqvarna-motorcycles.com

2.6 Reporting safety defects

If you believe that your vehicle has a defect which could cause an accident resulting in injury or death, you should immediately inform the National Highway Traffic Safety Administration (NHTSA) in addition to notifying Husqvarna Mobility North America, Inc.

If the NHTSA receives multiple similar complaints, it may open an investigation. and if it finds that a safety defect exists in a group of vehicles, it may order a recall and remedy campaign. However, NHTSA cannot become involved in individual problems between you, your contracting party, or Husqvarna Mobility North America, Inc.

You can contact the NHTSA via the toll-free “Auto Safety Hotline” on 1–888–327–4236, visit the www.nhtsa.dot.gov website, or write to: NHTSA Headquarters, 1200 New Jersey Avenue, SE, West Building, Washington, DC 20590, USA. You can also obtain other information about motor vehicle safety from the hotline.

2.7 Ban on tampering

No changes may be made to the noise control equipment and components.

Tampering that is prohibited

- Removing or disabling any devices or components used for noise control before the new vehicle is sold or delivered to the end customer.
- Removing or disabling any device or component used for noise control for purposes other than service, repair, or replacement during the service life of the vehicle.
- Use of the vehicle after a device or component used for noise control has been removed, disabled, or inadequately maintained.

Examples of prohibited tampering

- Removing or drilling through rear mufflers, baffle plates, manifolds, or other components that conduct exhaust gases.
- Removing or puncturing parts of the intake system.
- Replacing moving parts of the vehicle, or parts of the exhaust system or intake system, with parts other than those specified by the manufacturer.

2.8 Safe use

DANGER

Danger of accidents A rider who is not fit to ride poses a danger to themself and to others.

– Do not operate the vehicle if you are not fit to ride due to alcohol, drugs, or medication.
– Do not operate the vehicle if you are physically or mentally incapable of doing so.

DANGER

Danger of poisoning Exhaust gases are toxic and inhaling them may result in unconsciousness and death.

– Always ensure that there is sufficient ventilation when running the engine.
– Use suitable exhaust extraction when starting or running the engine in an enclosed space.

WARNING

Danger of burns Some vehicle components become hot when the vehicle is operated.

– Do not touch any parts such as the exhaust system, radiator, engine, damper, or brake system before the vehicle parts have cooled down.
– Allow the vehicle parts to cool down before performing any work on the vehicle.

The vehicle should only be used when it is in perfect technical condition, for its intended purpose, and in a safe and environmentally-friendly manner.

The vehicle must only be used by trained persons. An appropriate driver's license is needed to drive the vehicle on public roads.

Have any faults that impair safety immediately remedied by an authorized contractual partner.
Adhere to the information and warning labels on the vehicle.

2.9 Protective clothing

WARNING
Risk of injury Missing or inadequate protective clothing increases the risk of injury.
– Wear appropriate protective clothing such as helmet, boots, gloves as well as pants and a jacket with protectors on all rides.
– Always wear protective clothing that is in good condition and meets the legal regulations.

In the interest of your own safety, Husqvarna Mobility recommends that you only operate the vehicle while wearing protective clothing.

2.10 Work rules

Unless specified otherwise, the ignition must be switched off during all work (models with ignition lock, models with transponder key) or the engine must be at a standstill (models without ignition lock or transponder key).
Special tools are required for some work. The tools are not part of the vehicle, but can be ordered using the number in parentheses. Example: bearing puller (15112017000)
Unless otherwise noted, normal conditions apply to all tasks and descriptions.

Ambient temperature	20 °C (68.0 °F)
Ambient air pressure	1,013 mbar (14.69 psi)
Relative air humidity	60 ±5 %

During assembly, use new parts to replace parts which cannot be reused (e.g. self-locking screws and nuts, expansion screws, seals, sealing rings, O-rings, pins, and lock washers).
A thread lock (e.g. **Loctite®**) is required for some screw connections. Observe the manufacturer's specific instructions for use.
If thread lock (e.g. **Precote®**) has already been applied to a new part, do not apply any additional thread lock.
After disassembly, clean the parts that are to be reused and check them for damage and wear. Replace damaged or worn parts.
After completing a repair or service, check the operating safety of the vehicle.

2.11 Environment

If you use your motorcycle responsibly, you can ensure that problems and conflicts do not occur. To protect the future of the motorcycle sport, make sure that you use your motorcycle legally, be environmentally aware, and respect the rights of others.
When disposing of used oil, other operating and auxiliary fluids, and used components, comply with the laws and regulations of the respective country.
As motorcycles are not subject to the EU regulations governing the disposal of end-of-life vehicles, there are no legal regulations that pertain to the disposal of an end-of-life motorcycle. An authorized partner will be happy to help.

2.12 Owner's manual

Read this owner's manual carefully and completely before making your first trip. The owner's manual contains useful information and many tips on how to operate, handle, and service your vehicle. Only then will you find out how to best customize the vehicle for your own use and how you can protect yourself from injury.

Tip
Store the owner's manual on your terminal device, for example, so that you can read it whenever you need to.

If you would like to know more about the vehicle or have questions about the material, please contact an authorized partner.

The owner's manual is an important component of the vehicle. If the vehicle is sold, the owner's manual must be downloaded again by the new owner.

The owner's manual can be downloaded multiple times using the QR code or the link on the delivery certificate.

The owner's manual is also available for download from authorized contractual partners and on the Husqvarna Mobility website.

International Husqvarna Mobility website: https://www.husqvarna-motorcycles.com

A printed copy can be ordered from the following address.

Website for printed copy: https://print.ktm.com

2.13 Use definition – intended use

The vehicle is designed and constructed to withstand the usual demands of regular traffic and use on gentle terrain (unpaved roads). This vehicle is not suitable for use on race tracks.

Note
This vehicle is only authorized for operation on public roads in its homologated version.

2.14 Improper use

The vehicle may only be used as intended.

Improper use can result in danger to people, property and the environment.

Any use of the vehicle beyond the intended and defined use constitutes misuse.

Improper use includes the use of operating and auxiliary materials that do not meet the required specifications for the respective use.

2.15 Safety markings on the motorcycle

2.15.1 Overview of labels

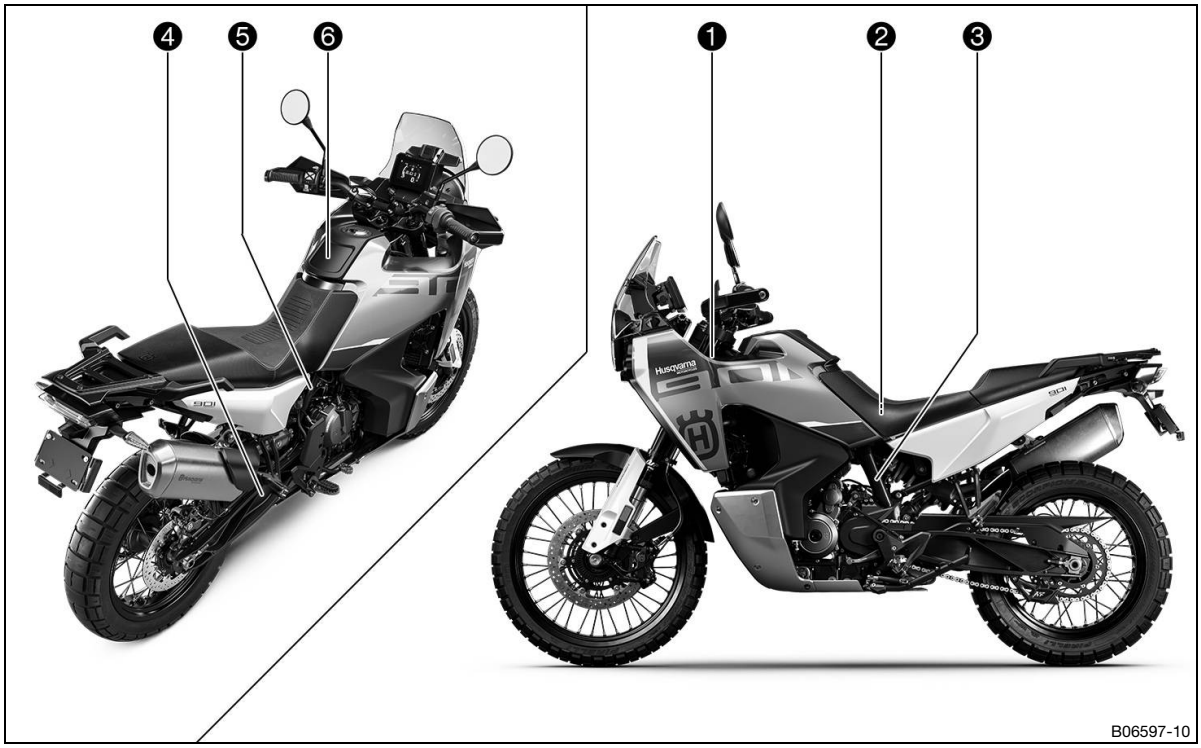

1. Information on emissions control
2. Fuses
3. Type label for USA
4. Information on noise emissions
5. Type label for Canada
6. Information on preparations for use

2.15.2 Label in detail

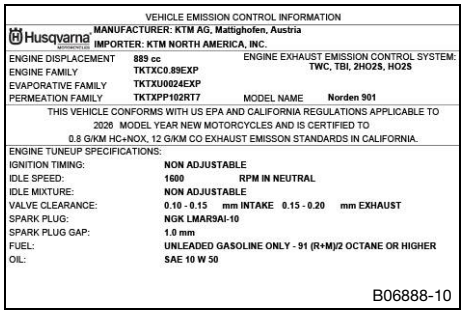

VEHICLE EMISSION CONTROL INFORMATION

Husqvarna MOTORCYCLES
MANUFACTURER: KTM AG, Mattighofen, Austria
IMPORTER: KTM NORTH AMERICA, INC.

ENGINE DISPLACEMENT	889 cc	ENGINE EXHAUST EMISSION CONTROL SYSTEM:	TWC, TBI, 2HO2S, HO2S
ENGINE FAMILY	TKTXC0.89EXP		
EVAPORATIVE FAMILY	TKTXU0024EXP		
PERMEATION FAMILY	TKTXPP102RT7	MODEL NAME	Norden 901

THIS VEHICLE CONFORMS WITH US EPA AND CALIFORNIA REGULATIONS APPLICABLE TO 2026 MODEL YEAR NEW MOTORCYCLES AND IS CERTIFIED TO 0.8 G/KM HC+NOX, 12 G/KM CO EXHAUST EMISSON STANDARDS IN CALIFORNIA.

ENGINE TUNEUP SPECIFICATIONS:

IGNITION TIMING:	NON ADJUSTABLE
IDLE SPEED:	1600 RPM IN NEUTRAL
IDLE MIXTURE:	NON ADJUSTABLE
VALVE CLEARANCE:	0.10 - 0.15 mm INTAKE 0.15 - 0.20 mm EXHAUST
SPARK PLUG:	NGK LMAR9AI-10
SPARK PLUG GAP:	1.0 mm
FUEL:	UNLEADED GASOLINE ONLY - 91 (R+M)/2 OCTANE OR HIGHER
OIL:	SAE 10 W 50

B06888-10

Information on emissions control

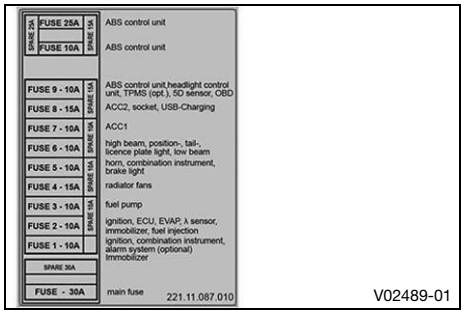

SPARE 25A	FUSE 25A	ABS control unit
SPARE 15A	FUSE 10A	ABS control unit
SPARE 15A	FUSE 9 - 10A	ABS control unit,headlight control unit, TPMS (opt.), 5D sensor, OBD
SPARE 15A	FUSE 8 - 15A	ACC2, socket, USB-Charging
SPARE 15A	FUSE 7 - 10A	ACC1
SPARE 15A	FUSE 6 - 10A	high beam, position-, tail-, licence plate light, low beam
SPARE 15A	FUSE 5 - 10A	horn, combination instrument, brake light
SPARE 15A	FUSE 4 - 15A	radiator fans
SPARE 15A	FUSE 3 - 10A	fuel pump
SPARE 15A	FUSE 2 - 10A	ignition, ECU, EVAP, λ sensor, immobilizer, fuel injection
	FUSE 1 - 10A	ignition, combination instrument, alarm system (optional) immobilizer
	SPARE 30A	
	FUSE - 30A	main fuse

221.11.087.010

V02489-01

Fuses

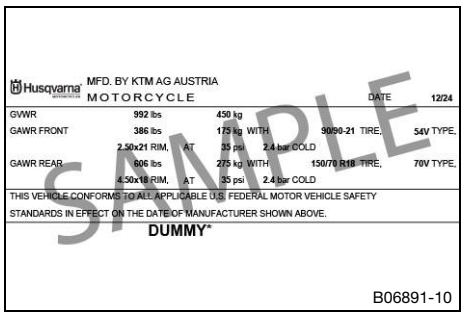
Husqvarna MFD. BY KTM AG AUSTRIA
MOTORCYCLE DATE 12/24

GVWR	992 lbs	450 kg				
GAWR FRONT	386 lbs	175 kg	WITH	90/90-21	TIRE,	54V TYPE,
	2.50x21 RIM, AT	35 psi	2.4 bar COLD			
GAWR REAR	606 lbs	275 kg	WITH	150/70 R18	TIRE,	70V TYPE,
	4.50x18 RIM, AT	35 psi	2.4 bar COLD			

THIS VEHICLE CONFORMS TO ALL APPLICABLE U.S. FEDERAL MOTOR VEHICLE SAFETY STANDARDS IN EFFECT ON THE DATE OF MANUFACTURER SHOWN ABOVE.

DUMMY*

SAMPLE

B06891-10

Type label for USA

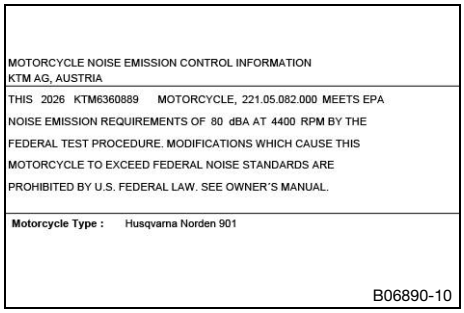
MOTORCYCLE NOISE EMISSION CONTROL INFORMATION
KTM AG, AUSTRIA

THIS 2026 KTM6360889 MOTORCYCLE, 221.05.082.000 MEETS EPA NOISE EMISSION REQUIREMENTS OF 80 dBA AT 4400 RPM BY THE FEDERAL TEST PROCEDURE. MODIFICATIONS WHICH CAUSE THIS MOTORCYCLE TO EXCEED FEDERAL NOISE STANDARDS ARE PROHIBITED BY U.S. FEDERAL LAW. SEE OWNER´S MANUAL.

Motorcycle Type : Husqvarna Norden 901

B06890-10

Information on noise emissions

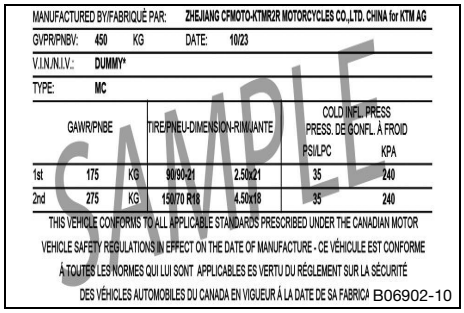
MANUFACTURED BY/FABRIQUÉ PAR: ZHEJIANG CFMOTO-KTMR2R MOTORCYCLES CO.,LTD. CHINA for KTM AG

GVPR/PNBV: 450 KG DATE: 10/23

V.I.N./N.I.V.: DUMMY*

TYPE: MC

	GAWR/PNBE		TIRE/PNEU-DIMENSION-RIM/JANTE		COLD INFL. PRESS PRESS. DE GONFL. À FROID PSI/LPC	KPA
1st	175	KG	90/90-21	2.50x21	35	240
2nd	275	KG	150/70 R18	4.50x18	35	240

THIS VEHICLE CONFORMS TO ALL APPLICABLE STANDARDS PRESCRIBED UNDER THE CANADIAN MOTOR VEHICLE SAFETY REGULATIONS IN EFFECT ON THE DATE OF MANUFACTURE - CE VÉHICULE EST CONFORME À TOUTES LES NORMES QUI LUI SONT APPLICABLES ES VERTU DU RÉGLEMENT SUR LA SÉCURITÉ DES VÉHICLES AUTOMOBILES DU CANADA EN VIGUEUR À LA DATE DE SA FABRICA

SAMPLE

B06902-10

Type approval label for CAN

Please read the entire owner's manual before putting the vehicle into operation for the first time!
Lire attentivement l'ensemble du manuel d'utilisation avant de mettre le véhicule en service!
A600.07.098.100

B06603-10

Information on preparations for use

3.1 Manufacturer's warranty, implied warranty

The work prescribed in the service schedule must only be carried out by an authorized contractual partner and then confirmed in the electronic proof of service, as otherwise all warranty claims will be void. Damage or secondary damage caused by tampering with and/or conversions on the vehicle are not covered by the manufacturer's warranty.

3.2 Auxiliary material, operating material

Use operating materials and auxiliary materials in accordance with the operating instructions and specifications.

3.3 Spare parts, technical accessories

For your own safety, only use spare parts and accessory products that are approved and/or recommended by Husqvarna Mobility and have them installed by an authorized contractual partner. Husqvarna accepts no liability for other products and any damage or loss resulting from their use.

Certain spare parts and accessory products are specified in parentheses in the descriptions. Your authorized contractual partner will be happy to advise you.

The current accessories for your vehicle can be found on the Husqvarna Mobility website.

International Husqvarna Mobility website: https://www.husqvarna-motorcycles.com

3.4 Service

A prerequisite for perfect operation and prevention of premature wear is that the service, care, and tuning work on the engine and chassis is properly carried out as described in the owner's manual. An incorrect suspension setting can lead to damage and breakage of chassis components.

Use of the vehicle under difficult conditions, such in rain, high heat or with a heavy payload, can lead to considerably more rapid wear of components such as the drive train, brake system, or suspension components. For this reason, it may be necessary to inspect or replace parts before the next scheduled service interval.

Please adhere to the prescribed run-in times and service intervals at all times. Strictly adhering to this will ensure a much longer service life for your motorcycle.

3.5 Figures

Some of the figures in this document contain optional extras.

For clarity, some components may be shown disassembled or may not be shown at all. Disassembly is not always absolutely necessary in order to carry out the activities described. The textual information takes precedence.

3.6 Customer service

Your authorized partner will be happy to answer any questions you may have regarding your vehicle or about Husqvarna Mobility.

You can find the list of authorized contractual partners on the Husqvarna Mobility website.

International Husqvarna Mobility website: https://www.husqvarna-motorcycles.com

4.1 View of vehicle, front left (example)

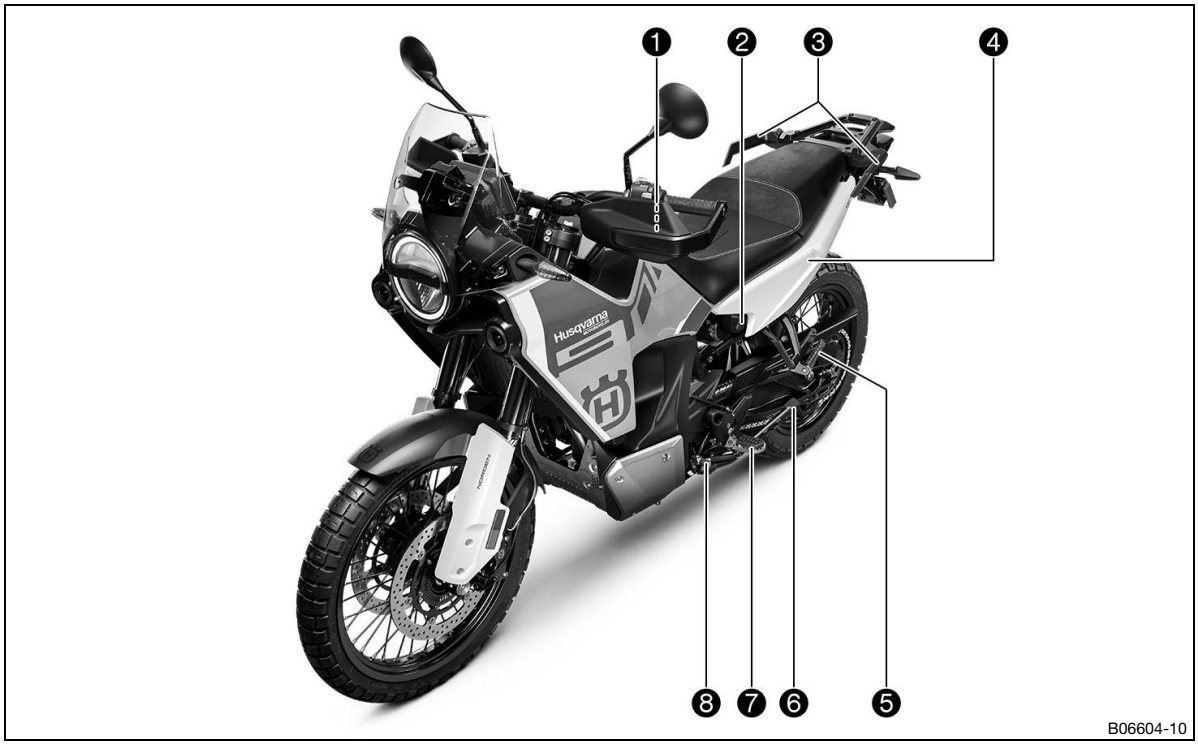

1. Clutch lever (p. 22)
2. Seat lock (p. 32)
3. Grab handles (p. 32)
4. Storage compartment, left
5. Passenger footpegs (p. 33)
6. Side stand (p. 34)
7. Rider footrests
8. Gear shift lever (p. 33)

4.2 View of vehicle, rear right (example)

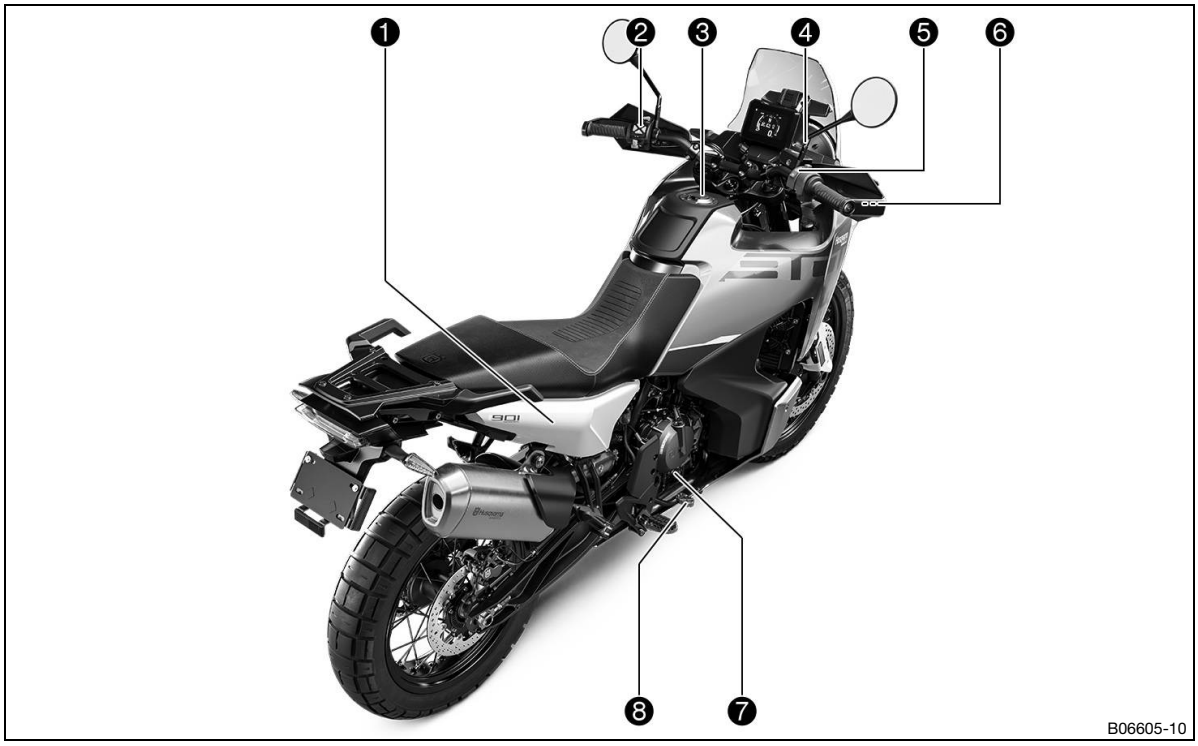

1. Storage compartment, right
2. Light switch (p. 23)
2. Menu buttons (p. 24)
2. Turn signal switch (p. 24)
2. Horn button (p. 25)
3. Fuel tank cap
4. Socket for electrical accessories (p. 27)
5. Start button/kill switch (p. 25)
6. Handbrake lever (p. 22)
7. Engine oil level viewer
8. Brake pedal (p. 33)

5.1 Vehicle identification number

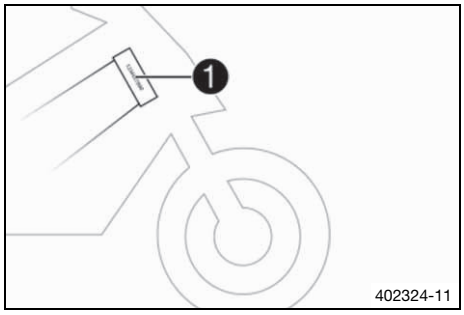

The vehicle identification number ❶ is stamped on the right-hand side of the steering head.

5.2 Type approval label

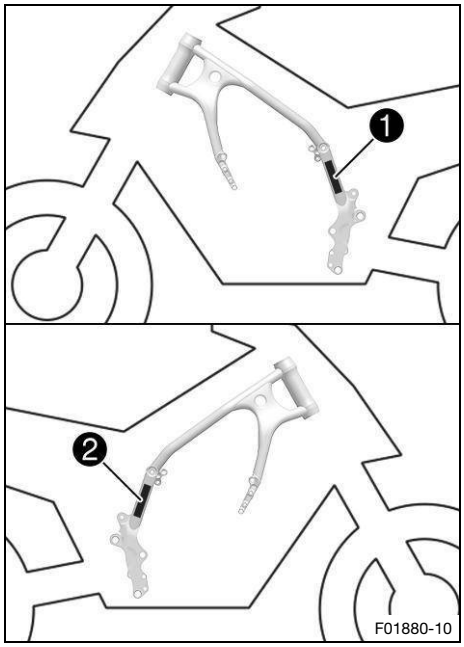

The USA type label ❶ is located on the frame on the left.

The Canada type label ❷ is located on the frame on the right.

5.3 Key number

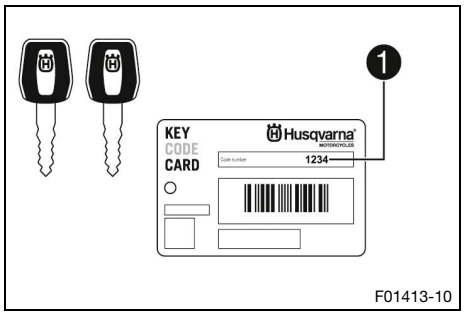

Key number ❶ for the ignition and steering lock is indicated on the key card.

Note

The key number is required to order a spare key and should therefore be kept in a safe place.

5.4 Engine number

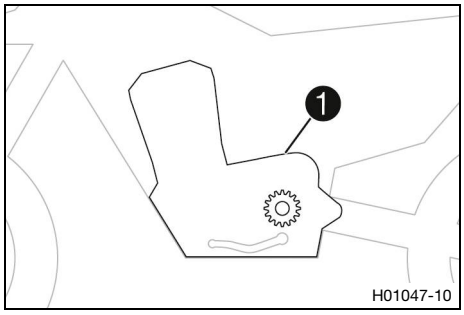

The engine number ❶ is stamped onto the engine case at the top.

5.5 Fork part number

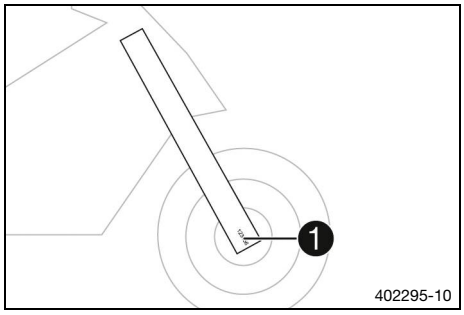

Fork part number ❶ is stamped on the inside of the fork shoe.

5.6 Shock absorber part number

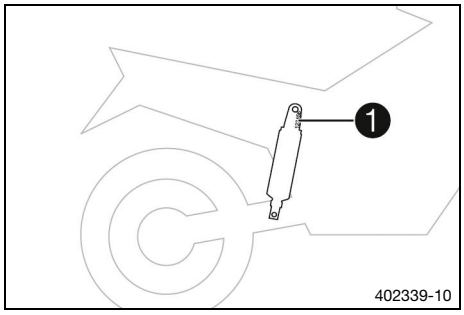

The shock absorber part number ❶ is stamped on the top of the shock absorber.

5.7 Steering damper article number

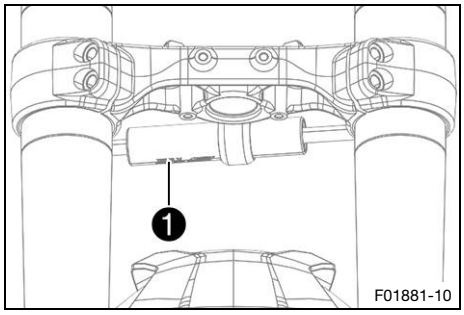

Steering damper article number ❶ is embossed on the underside of the steering damper.

6.1 Clutch lever

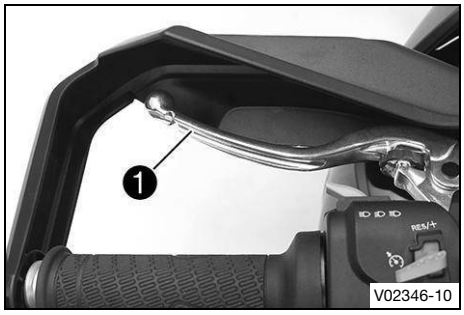

Clutch lever ❶ is fitted on the left side of the handlebar.

6.2 Handbrake lever

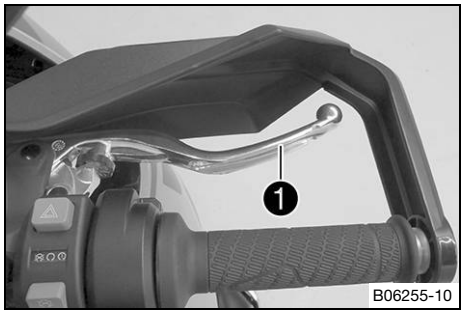

Hand brake lever ❶ is fitted on the right side of the handlebar. The front brake is engaged using the hand brake lever.

6.3 Throttle grip

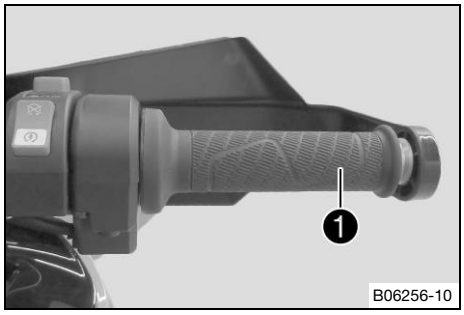

The throttle twist grip ❶ is fitted on the right side of the handlebar.

6.4 Switches on the left side of the handlebar

6.4.1 Combination switch

The combination switch is fitted on the left side of the handlebar.

Overview of the left combination switch

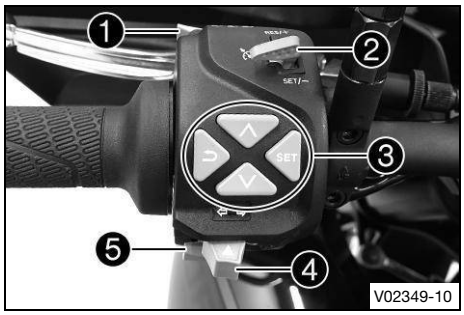

❶ Light switch (p. 23)
❷ Cruise control system tip switch (p. 23)
❸ Menu buttons (p. 24)
❹ Turn signal switch (p. 24)
❺ Horn button (p. 25)

6.4.2 Light switch

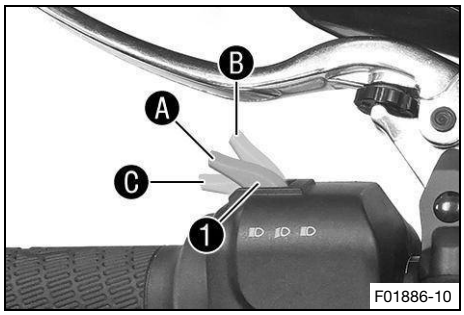

The light switch ❶ is fitted on the combination switch on the left.

Condition		Meaning
	Light switch in position Ⓐ.	In this position, the low beam and the tail light are switched on.
	Light switch in position Ⓑ.	In this position, the high beam and the tail light are switched on.
	Light switch in position Ⓒ.	The headlight flasher is operated in this position.

6.4.3 Cruise control system tip switch

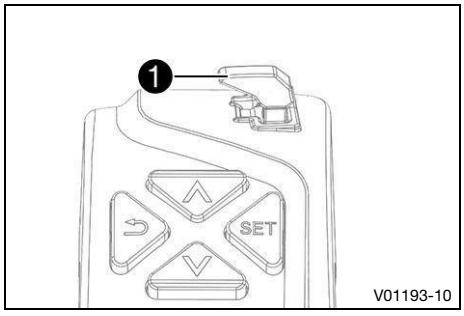

The cruise control system tip switch ❶ is fitted on the left side of the combination switch.

Condition	Meaning
Cruise control tip switch in the basic position.	No function
Cruise control tip switch pressed to the left.	In this position, the cruise control system function is switched on and off. The operating mode is displayed on the combination instrument.
Cruise control tip switch briefly pressed up.	The last saved speed is reached and maintained. Every subsequent brief pressing increases the target speed by 1 km/h or 1 mph.
Cruise control tip switch pressed and held up.	The target speed increases in increments of 5 km/h or 5 mph.
Cruise control tip switch briefly pressed down.	The cruise control function is activated and the current speed is maintained. Every subsequent brief press reduces the target speed by 1 km/h or 1 mph.
Cruise control tip switch pressed and held down.	The target speed decreases in increments of 5 km/h or 5 mph.

WARNING

Danger of accidents The cruise control system function is not suitable for all riding situations.

The selected cruise speed will not be reached if the engine power is not sufficient for a gradient.

The selected target speed will be exceeded if the engine braking effect is not sufficient on an incline.

- Do not use the cruise control systems function on winding roads.
- Do not use the cruise control systems on slippery road surfaces (e.g. rain, ice or snow), where there is poor visibility or on unpaved surfaces (e.g. sand, stones or gravel).
- Do not use the cruise control systems function if the traffic does not permit a constant speed.

Note

After activating the cruise control function, the throttle grip can be turned back to the basic position. The selected speed will be maintained.

If the cruise speed is exceeded for less than 30 seconds by turning the throttle grip, the cruise control remains activated.

To switch off the cruise control system function, press the **cruise control system tip switch** to the left.
In addition, the cruise control system function is deactivated when one of the following events occurs:

- Operating the handbrake lever
- Operating the foot brake lever
- Operating the clutch lever
- Turning the throttle grip beyond the basic position
- Control of the motorcycle traction control (**MTC**)
- Slip at the rear wheel or lifting front wheel
- A malfunction occurring, which impairs the cruise control system function
- Exceeding the target speed for more than 30 seconds when overtaking

The cruise control system function is only available when motorcycle traction control (**MTC**) is activated.
When motorcycle traction control (**MTC**) is switched off, the cruise control system function is also switched off.
The cruise control system function cannot be activated during rapid acceleration.
The cruise control function can only be activated in 2nd, 3rd, 4th, 5th and 6th gear.
The control range is from 30 to 160 km/h or from 18 to 98 mph.

6.4.4 Menu buttons

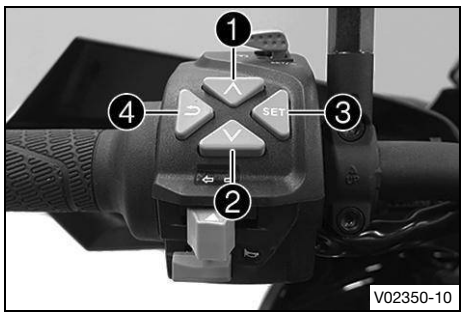

The menu buttons are fitted in the middle of the left combination switch.
The menu buttons are used to control the display on the combination instrument.
Button ❶ is the **UP** button.
Button ❷ is the **DOWN** button.
Button ❸ is the **SET** button.
Button ❹ is the **BACK** button.

6.4.5 Turn signal switch

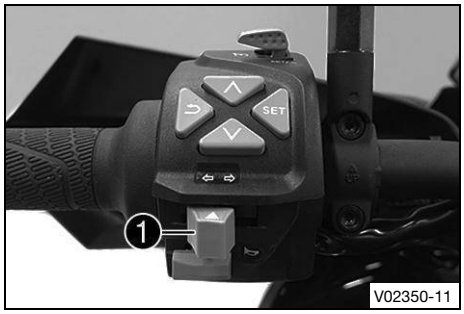

Turn signal switch ❶ is fitted on the combination switch on the left.

Condition		Meaning
⇦	Turn signal switch pressed to the left	Left turn signal, on
⇨	Turn signal switch pressed to the right	Right turn signal, on

To switch off the turn signal, press the turn signal switch towards the switch case.

6.4.6 Horn button

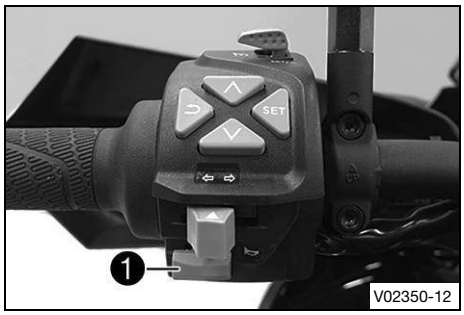

Horn button ❶ is fitted on the left side of the handlebar.

Condition	Meaning
Horn buttons in the basic position	No function
Horn buttons pressed	The horn is operated in this position.

6.5 Switches on the right side of the handlebar

6.5.1 Start button/kill switch

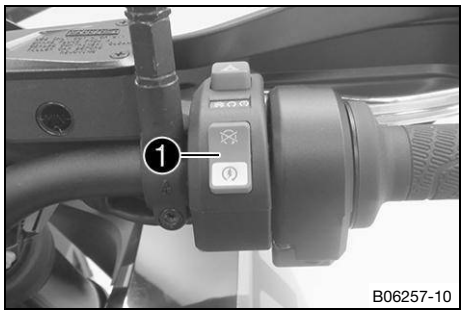

The start button/kill switch ❶ is fitted on the right side of the combination switch.

Condition		Meaning
	Start button/kill switch off (upper position)	In this position, the ignition circuit is interrupted, a running engine stops, and cannot be started. A message appears on the display.
	Start button/kill switch on (middle position)	This position is required for operation; the ignition circuit is closed.
	Starter motor on (lower position)	In this position, the starter motor is actuated.

6.6 Ignition and steering lock

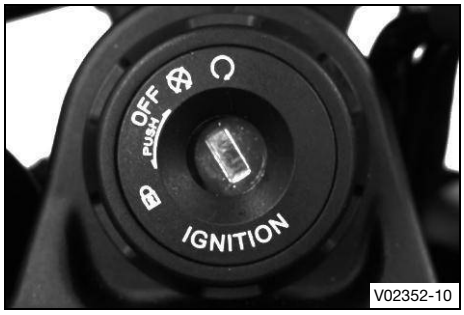

The ignition and steering lock is located in front of the upper triple clamp.

Condition		Meaning
	Ignition off	In this position, the ignition circuit is interrupted, a running engine stops, and an engine at a standstill will not start. The ignition key can be removed.
	Ignition on	In this position, the ignition circuit is closed, and the engine can be started.
	Steering locked	In this position, the ignition circuit is interrupted and the steering locked. The ignition key can be removed.

6.7 Locking the steering

NOTE

Material damage The vehicle may be damaged if parked incorrectly.

Damage can occur if the vehicle rolls away or falls over.

The components for parking the vehicle are designed only for the weight of the vehicle.

– Park the vehicle on a firm and level surface.
– Make sure that nobody sits on the vehicle when it is parked on a stand.

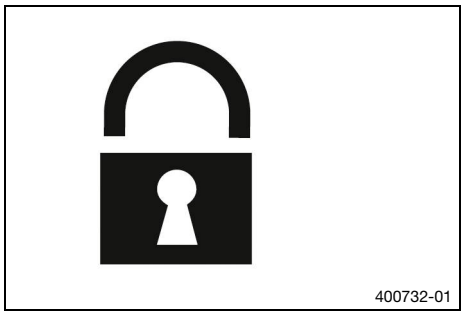

– Park the vehicle.
– Turn the handlebar all the way to the left.
– Insert the ignition key into the ignition and steering lock, press in, and turn to the left. Remove the ignition key.
  ✓ Steering is no longer possible.

6.8 Unlocking the steering

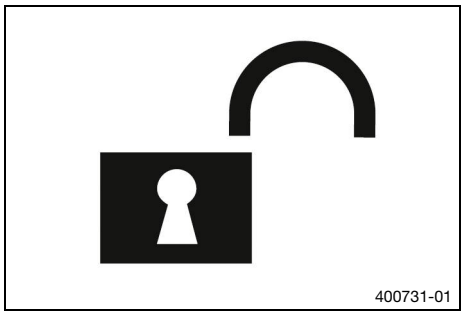

– Insert the ignition key into the ignition and steering lock, press in, and turn to the right. Remove the ignition key.
  ✓ The handlebar can now be moved again.

6.9 Supplementary headlight switch

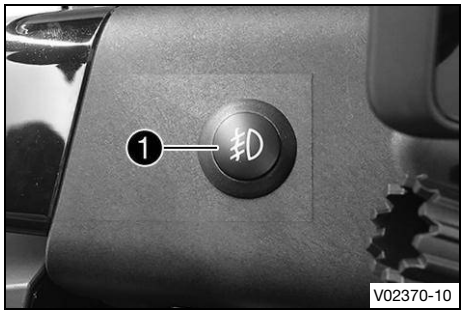

Supplementary headlight switch ❶ is located on the left, next to the combination instrument.

Note
When the symbol lights up on the switch, the supplementary headlights are switched on.

6.10 Socket for electrical accessories

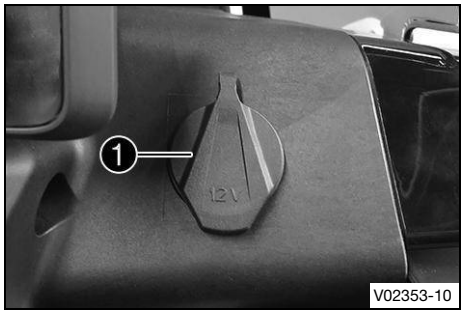

Socket ❶ for electrical accessories is located on the right, next to the combination instrument.
The socket is connected to the ignition plus and is fuse-protected.

Socket for electrical accessories	
Voltage	12 V
Maximum current output	10 A

6.11 USB-C socket

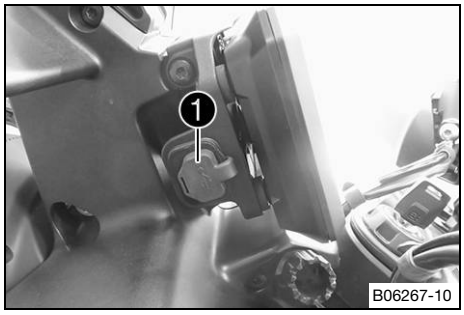

The USB-C socket ❶ for the power supply to external devices is fitted on the left-hand side of the mask support.
The USB-C socket is switched on with the ignition.

USB-C socket	
Voltage	5 V
Maximum current consumption	2.1 A

6.12 Opening the fuel tank cap

DANGER
Fire hazard Fuel is highly flammable.
The fuel in the fuel tank expands when warm and can escape if overfilled.
- Do not refuel the vehicle in the vicinity of open flames, glowing, or smoldering objects.
- Make sure that nobody smokes in the vicinity of the vehicle during the refueling process.
- Switch off the engine for refueling.
- Make sure that no fuel is spilled; particularly not on hot parts of the vehicle.
- If any fuel is spilled, wipe it up immediately.
- Do not overfill the fuel tank.

WARNING

Danger of poisoning Fuel is harmful to health.

- Do not allow fuel to come into contact with skin, eyes, or clothing.
- Consult a doctor immediately if fuel has been ingested.
- Do not inhale fuel vapors.
- Rinse the affected area immediately with plenty of water in the event of contact with skin.
- Rinse eyes thoroughly with water and consult a doctor immediately if fuel comes into contact with eyes.
- If fuel spills on to your clothing, change the clothing.
- Store fuel properly in a suitable container and keep out of the reach of children.

NOTE

Environmental hazard Improper handling of fuel is dangerous to the environment.

- Do not allow fuel to enter the groundwater, the soil, or the sewage system.

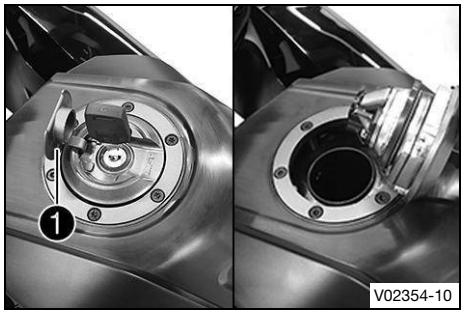

- Lift cover ❶ of the fuel tank filler cap and insert the ignition key into the lock.

NOTE

Danger of damage The ignition key may break if overloaded.

- Push down on the fuel tank filler cap to take pressure off the ignition key.

- Turn the ignition key 90° clockwise.
- Lift the fuel tank filler cap.

6.13 Closing the fuel tank cap

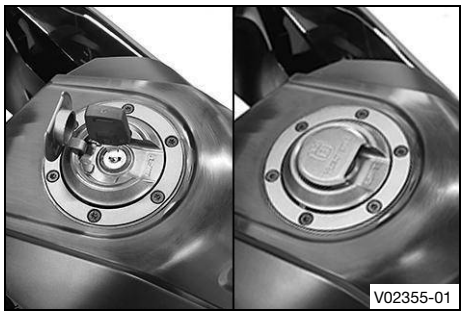

- Fold down the fuel tank filler cap.
- Turn the ignition key 90° clockwise.
- Push down the fuel tank filler cap and turn the ignition key counterclockwise until the lock closes.

WARNING

Fire hazard Fuel is highly flammable and a health hazard.

- Check that the fuel tank filler cap is locked correctly after closing.
- If fuel spills on to your clothing, change the clothing.
- Rinse the affected area immediately with plenty of water in the event of contact with skin.

- Remove the ignition key and close the cover.

6.14 Fuel petcocks

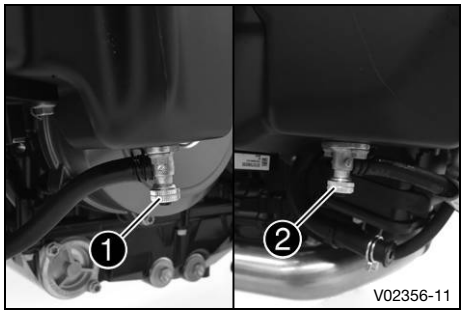

Fuel petcocks ❶ and ❷ are located on the side of the fuel tank.

Note
The fuel cocks are located behind the fuel tank covers.
The fuel cocks must always be open during operation.
The fuel petcocks are only closed to remove the fuel tank.

Condition	Meaning
Fuel petcocks are closed	Level equalization cannot take place and the fuel supply to the throttle valve body is shut off.
Fuel petcocks are open	Level equalization can take place and the fuel supply to the throttle valve body is open.
One fuel petcock open, one fuel petcock closed	Level equalization cannot take place and the fuel supply to the throttle valve body is open.

6.15 Opening the storage compartment on the left

Preparatory work

– Remove the passenger seat. (p. 99)
– Remove the front rider's seat. (p. 99)
– Remove the left side cover. (p. 111)

Main work

– Lift the elastic fastener ❶ and detach in area Ⓐ.
– Open storage compartment.

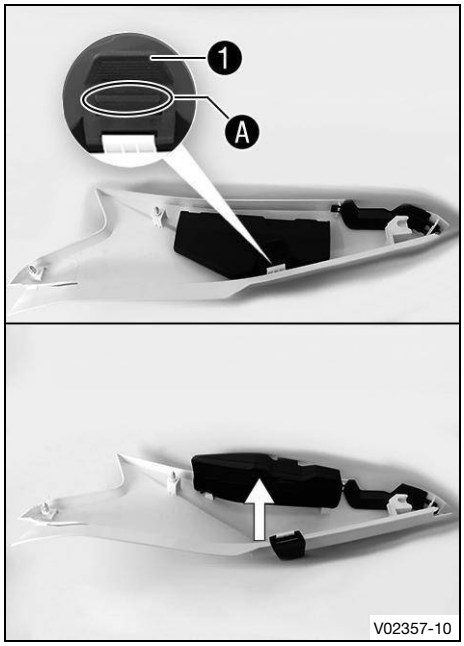

6.16 Closing the storage compartment on the left

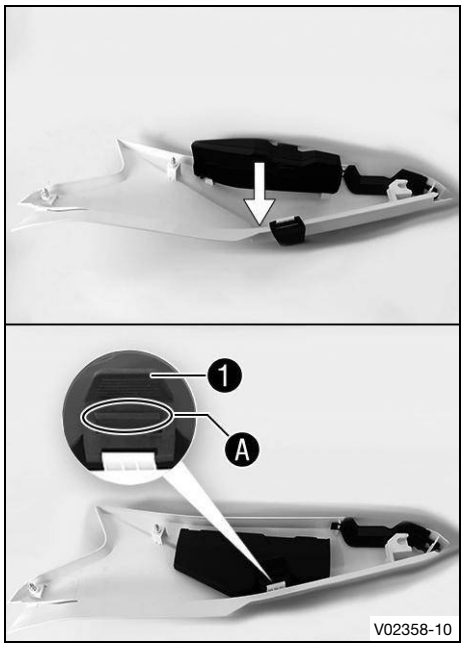

Main work

– Close storage compartment.
– Raise elastic fastener ❶ and hang up in area Ⓐ.

Reworking

– Install the left side cover. (p. 111)
– Mount the front rider's seat. (p. 100)
– Mount the passenger seat. (p. 99)

6.17 Opening the storage compartment on the right

Preparatory work

– Remove the passenger seat. (p. 99)
– Remove the front rider's seat. (p. 99)
– Remove the right side cover. (p. 112)

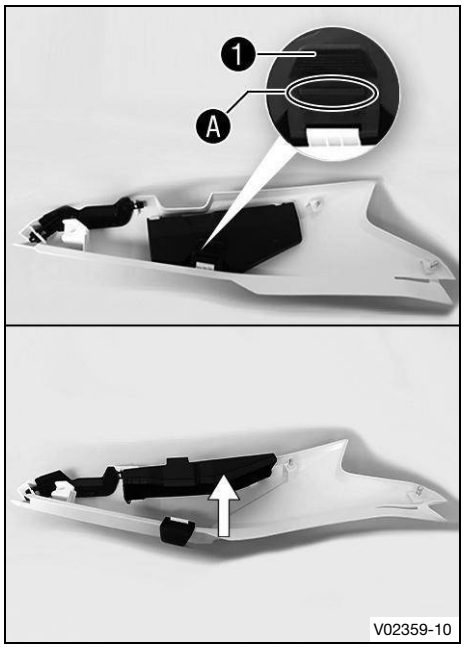

Main work

– Lift the elastic fastener ❶ and detach in area Ⓐ.
– Open storage compartment.

6.18 Closing the storage compartment on the right

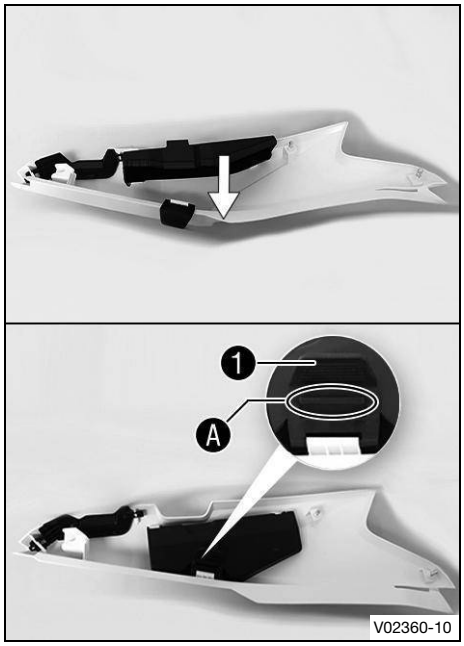

Main work

– Close storage compartment.
– Raise elastic fastener ❶ and hang up in area Ⓐ.

Reworking

– Install the right side cover. (p. 112)
– Mount the front rider's seat. (p. 100)
– Mount the passenger seat. (p. 99)

6.19 On-board tool kit

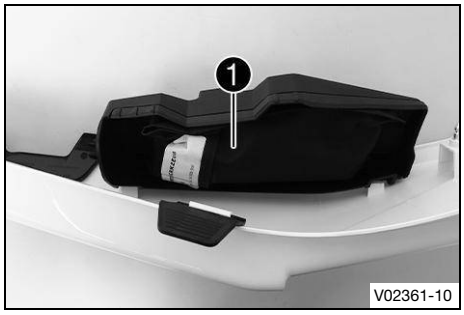

The left or right storage compartment contains the on-board tool set ❶.

6.20 Grab handles

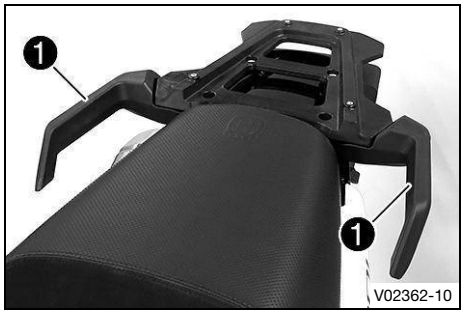

The grab handles ❶ are used for moving the motorcycle around.

If you carry a passenger, the passenger can hold onto the grab handles during the trip.

6.21 Luggage rack plate

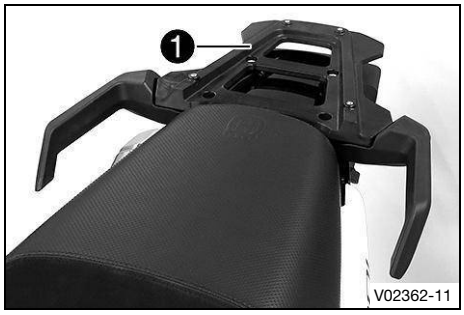

The luggage rack plate ❶ is located behind the passenger seat.

The base plate of a luggage system can be mounted on the luggage rack plate (optional).

The luggage rack plate may not be loaded with more than the specified weight.

Maximum permissible load of luggage rack plate	5 kg (11.0 lb)

Note

Follow the instructions provided by the luggage manufacturer.

6.22 Seat lock

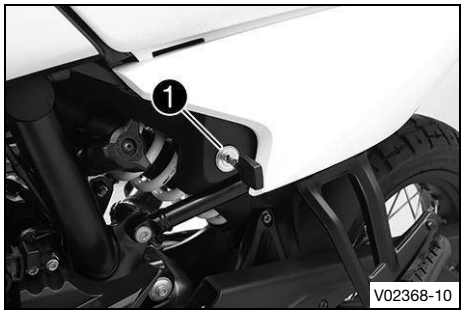

Seat lock ❶ is located on the left side of the vehicle.

It can be locked with the ignition key.

6.23 Passenger footpegs

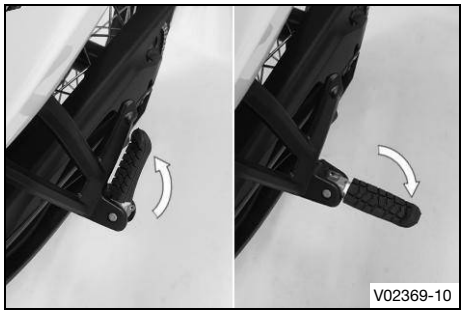

The passenger foot pegs can be folded up and down.

Condition	Meaning
Passenger foot pegs folded up	For use without a passenger
Passenger foot pegs folded down	For use with a passenger

6.24 Gear shift lever

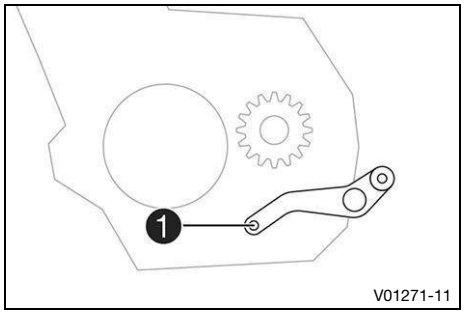

Gear shift lever ❶ is mounted on the left of the engine.

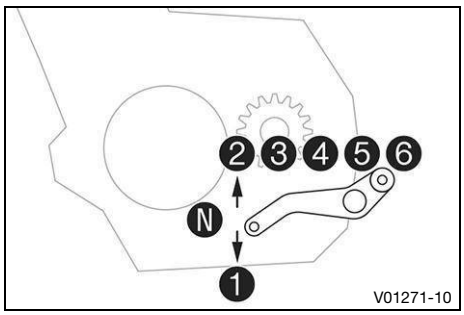

The gear positions can be seen in the figure.
The neutral or idle position is between the first and second gears.

6.25 Brake pedal

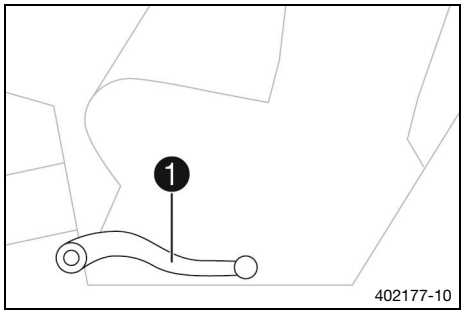

Brake pedal ❶ is located in front of the right footpeg.
The rear brake is operated with the brake pedal.

6.26 Side stand

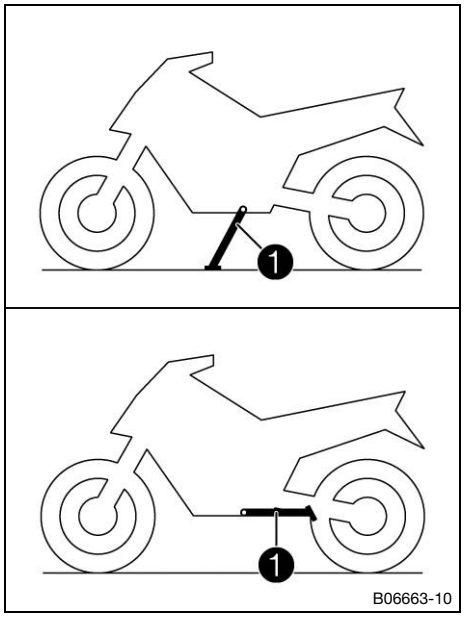

The side stand ❶ is located on the left of the vehicle.
The side stand is used for parking the motorcycle.

Condition	Meaning
Side stand ❶ folded out	The vehicle can be supported on the side stand. The safety starting system is active.
Side stand ❶ folded in	This position is mandatory when riding the motorcycle. The safety starting system is inactive.

Note
The side stand must be folded up during use.
The side stand is coupled with the safety starting system; follow the riding instructions.

6.27 Center stand (Norden 901 Expedition)

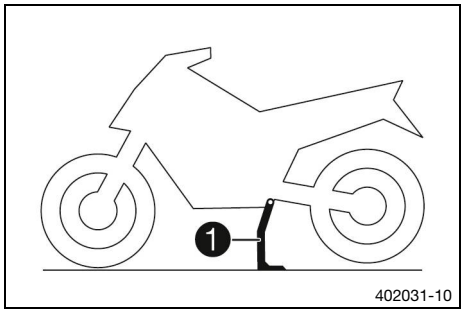

In addition to the side stand, the vehicle is equipped with a center stand ❶.

7.1 Dashboard

The combination instrument is attached in front of the handlebar.

V02176-10

The combination instrument is divided into two function areas.

❶ indicator lamps (p. 37)

Display ❷

CAUTION

Danger of burns Parts of the combination instrument become hot in certain situations.

The display in particular can heat up considerably at ambient temperatures above 55 °C (131 °F) during long periods of inactivity, e.g. at traffic lights, or in direct sunlight.

- Do not touch the combination instrument with bare hands in the situations referred to.
- Where appropriate protective clothing.
- In the event of burns, rinse the area affected immediately with lukewarm water.

7.2 activation and testing

7.2.1 Activation

V02178-01

The dashboard is switched on with the ignition.

Note

The brightness of the displays is controlled by an ambient light sensor in the combination instrument.

7.2.2 Test

The welcome text appears on the display and all the indicator lights are briefly activated for a function check.

Note

The malfunction indicator lamp always lights up as long as the engine is not running. If the engine is running and the failure indicator light lights up, stop (taking care not to endanger yourself or other road users in the process) and contact an authorized dealer.

The oil pressure warning lamp always lights up as long as the engine is not running. If the engine is running and the oil pressure warning lamp lights up, stop immediately (taking care not to endanger yourself or other road users in the process) and switch off the engine.

The ABS warning lamp and TC indicator lamp light up until a speed of approx. 6 km/h (approx. 4 mph) or faster has been reached.

7.3 warnings

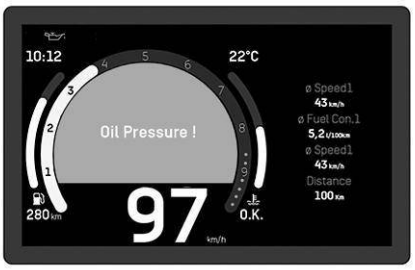

V02192-01

Warnings appear in the middle of the display; these are marked yellow or red depending on their relevance.

Yellow warnings indicate malfunctions or information which require prompt intervention or an adjustment to the riding style.

Red warnings indicate malfunctions or information which require immediate intervention.

Note

Warnings can be hidden by pressing any button.

All the existing warnings are displayed in the **Warning** sub-menu until they are no longer active.

7.4 ice warning

V02252-01

The **ice warning** goes on when there is an increased risk of ice on the roads.
The **ice warning** appears on the display when the ambient temperature has fallen to or below the specified value.

Temperature	≤ 4 °C (≤ 39.2 °F)

The **ice warning** disappears from the display when the ambient temperature has risen to or above the specified value again.

Temperature	≥ 6 °C (≥ 42.8 °F)

Note
When the **ice warning** lights up, the warning **Ice Warning** also appears.

7.5 indicator lamps

V02180-10

The indicator lamps offer additional information about the operating state of the motorcycle.
When the ignition is switched on, all indicator lamps light up briefly.

Note
The malfunction indicator lamp always lights up as long as the engine is not running. If the engine is running and the failure indicator light lights up, stop (taking care not to endanger yourself or other road users in the process) and contact an authorized dealer.

The oil pressure warning lamp always lights up as long as the engine is not running. If the engine is running and the oil pressure warning lamp lights up, stop immediately (taking care not to endanger yourself or other road users in the process) and switch off the engine.

The ABS warning lamp and TC indicator lamp light up until a speed of approx. 6 km/h (approx. 4 mph) or faster has been reached.

Condition		Meaning
	The alarm system indicator lamp lights up or flashes red	Status or error message of the alarm system.
N	The idle indicator lamp lights up green	The transmission is in the neutral position.
	The oil pressure warning light lights up red	The oil pressure is too low. Stop immediately, taking care not to endanger yourself or other road users in the process, and switch off the engine.
	General warning light lights up yellow	A note/warning note on operating safety has been detected. This is also shown in the display.
	The malfunction indicator light lights up yellow	The **OBD** has detected a malfunction in the vehicle electronics. Come safely to a halt, and contact an authorized dealer.
	The high beam indicator lamp lights up blue	The high beam is switched on.
	The cruise control system indicator lamp lights up yellow	The cruise control system function is switched on, but cruise control is not activated.
	The cruise control system indicator lamp lights up green	The cruise control system function is switched on and cruise control is activated.
	Ice warning is active on the display.	The warning lamp lights up when there is increased risk of icy roads.
TC	TC indicator lamp lights up/flashes yellow	**MTC** is not active or is currently regulating. The TC indicator lamp also lights up if a malfunction is detected. Contact an authorized contractual partner. The TC indicator lamp flashes if **MTC** or **MSR** actively engage.
ABS	ABS warning light lights up yellow	Status or error messages relating to **ABS**.
	The turn signal indicator light flashes green with a steady blinking interval	The turn signal is switched on.

7.6 Display

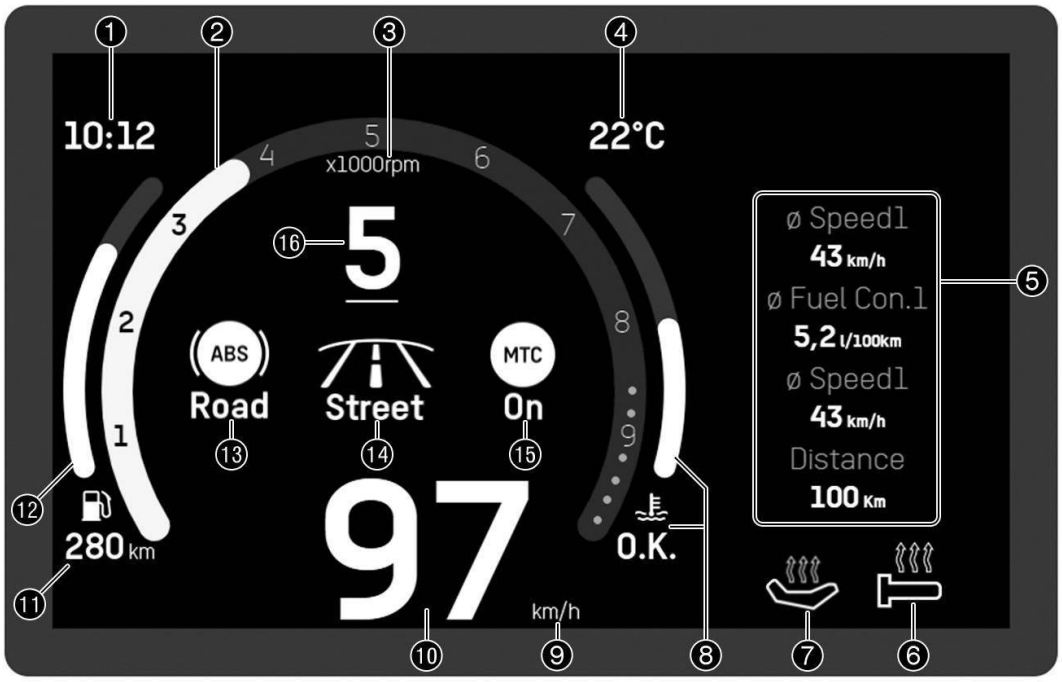

V02179-10

1. time (p. 42)
2. speed (p. 40)
2. shift light (p. 41)
   The shift light is integrated in the rpm gauge display.
3. Unit for the engine speed display
4. ambient air temperature indicator (p. 43)
5. **Favorites** display (p. 45)
6. heated grip (optional) (p. 45)
7. Front rider's seat heating (optional) (p. 45)
8. coolant temperature indicator (p. 44)
9. Unit of speed
10. speed display (p. 42)
11. Fuel range display
12. fuel level display (p. 44)
13. **ABS** display (p. 43)
14. **Ride-Mode** display (p. 43)
15. **MTC** display (p. 43)
16. Gear display

7.7 Explorer display (optional)

Note
The figure shows the start screen of the combination instrument in active riding mode **Explorer** (optional). If the menu is open, the speed and the selected gear are still displayed.

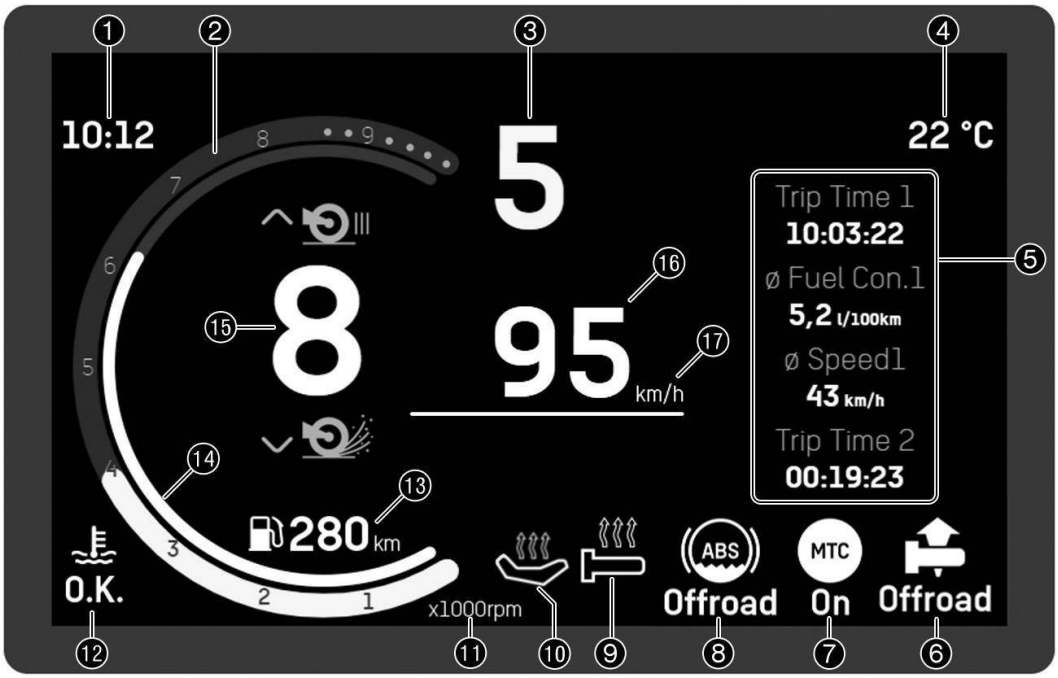

V02186-10

1. time (p. 42)
2. speed (p. 40)
2. shift light (p. 41)
   The shift light is integrated in the rpm gauge display.
3. Gear display
4. ambient air temperature indicator (p. 43)
5. **Favorites** display (p. 45)
6. **Throttle** (optional) (p. 161)
7. **MTC** display (p. 43)
8. **ABS** display (p. 43)
9. heated grip (optional) (p. 45)
10. Front rider's seat heating (optional) (p. 45)
11. Unit for the engine speed display
12. coolant temperature indicator (p. 44)
13. Fuel range display
14. fuel level display (p. 44)
15. slip adjustment (optional) (p. 160)
16. speed display (p. 42)
17. Unit of speed

7.8 speed

V02182-01

The engine speed is displayed in revolutions per minute.

7.9 shift light

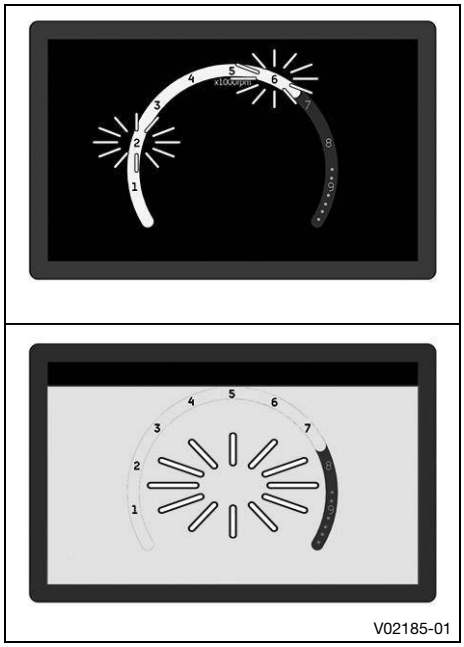

The shift light is integrated in the rpm gauge display.

In the **Shift Light** submenu, the engine speed for the shift warning light can be set. The shift warning light is always active during the running-in phase (up to 1,000 km / 621 mi). The shift warning light can only be deactivated, and the values for **RPM1** and **RPM2** can only be adjusted after this. At **RPM1**, the engine speed display flashes, and at **RPM2** the entire display flashes yellow.

Note
After the first service, the shift warning light is deactivated when the engine is warm and in sixth-gear.

Coolant temperature	≤ 35 °C (≤ 95.0 °F)
ODO	< 1,000 km (< 621.4 mi)
The shift warning light always flashes at	6,500 rpm (108.33 Hz)

Coolant temperature	> 35 °C (> 95.0 °F)
ODO	> 1,000 km (> 621.4 mi)
RPM1 shift warning light	flashes
RPM2 shift warning light	flashes and changes color

7.10 speed display

V02187-10

The speed is shown in area ❶ of the display.
Speed is shown in kilometers per hour **km/h** or in miles per hour **mph**.
The unit of speed can be configured in the **Units** menu.

7.11 Cruise control indicator

V02189-10

The operating state of the active cruise control is shown in the area ❶ of the display.
Cruise control is operated using the cruise control tip switch (p. 23).

Note
If the cruise control system function is switched on but cruise control is not activated, the cruise control system indicator lamp lights up yellow.
If the cruise control system function is switched on and cruise control is activated, the cruise control system indicator lamp lights up green.

7.12 time

V02459-10

The time is shown in area ❶ of the display.
The time can be displayed in 24-hour format or 12-hour format in all languages.
The format of the time can be configured in the **Units** menu.

Note
The time must be reset if the 12 V battery was disconnected from the vehicle or the fuse was removed.

7.13 ambient air temperature indicator

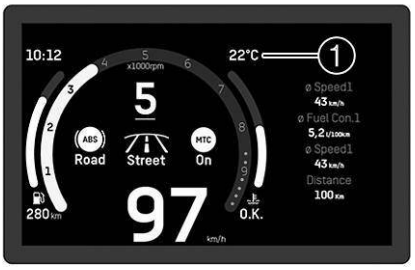

V02458-10

The ambient temperature is shown in area ❶ of the display.
The ambient air temperature is displayed in **°C** or **°F**.
The unit of the ambient air temperature can be configured in the **Units** menu.

7.14 Ride-Mode display

V02188-10

The **Ride Mode** (p. 160) setting is shown in area ❶ of the display.
The riding mode can be configured in the menu **Ride Mode**.

7.15 ABS display

V02190-10

The ABS mode setting is shown in the ❶ area of the display.
The ABS can be configured in the **ABS Mode** menu.

Note
When the ABS mode **Road** is active, ABS controls both wheels.
When the **Offroad** ABS mode is active, ABS only controls the front wheel. The rear wheel is not controlled by ABS and may lock during braking maneuvers.

7.16 MTC display

V02191-10

The ❶ area of the display indicates whether **MTC** (p. 160) is switched on or off.
The motorcycle traction control can be switched on or off in the **MTC + MSR** menu.

7.17 coolant temperature indicator

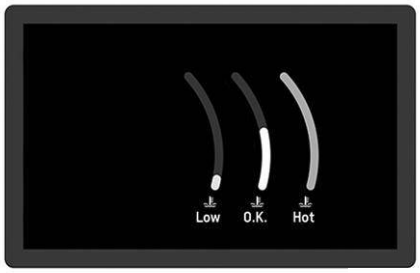

V02195-01

The coolant temperature is displayed by a symbol. The symbol changes between **LOW**, **OK** and **HOT** depending on the temperature.

NOTE

Engine failure Overheating damages the engine.

- If the coolant temperature warning is displayed, stop immediately and take care not to endanger yourself or other traffic participants in the process.
- Allow the engine and cooling system to cool down.
- Check and, if necessary, correct the coolant level on the cooling system while it is in a cooled state.

Note

If the coolant temperature indicator shows **HOT**, the indicator also starts to flash.

If the cooling system overheats, the maximum engine speed is limited.

Condition	Meaning
The coolant temperature indicator shows **LOW**.	The engine is cold
The coolant temperature indicator shows **O.K.**.	Engine warm
The coolant temperature indicator shows **HOT**.	Engine hot

7.18 fuel level display

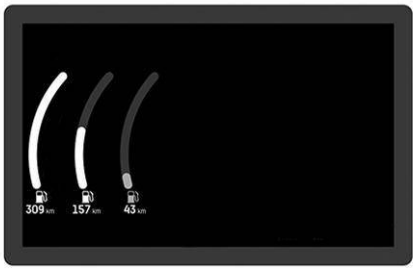

V02196-01

The fuel level display consists of the fuel range display and a bar. The higher the bar is filled, the more fuel there is in the fuel tank.

Note

If the fuel level is getting low, the last segment flashes red and the following warning **Low Fuel** also appears.

The fuel level is displayed with a slight delay to prevent the indicator from constantly moving while riding.

The fuel level display is not updated while the side stand is folded out or the emergency OFF switch is switched off.

Once the side stand is folded up and the kill switch is switched on, the fuel level display is next updated after 2 minutes.

The fuel level display flashes if the combination instrument does not receive a signal from the fuel level sensor.

7.19 heated grip (optional)

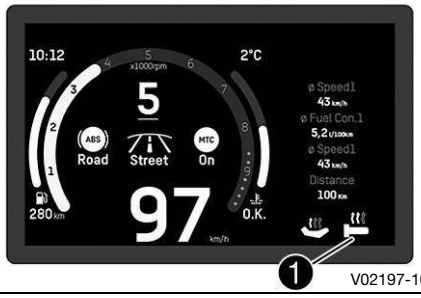

V02197-10

The status of the heated grip is shown in area ❶ of the display.
The heated grip can be configured in the **Heating** menu.

7.20 Front rider's seat heating (optional)

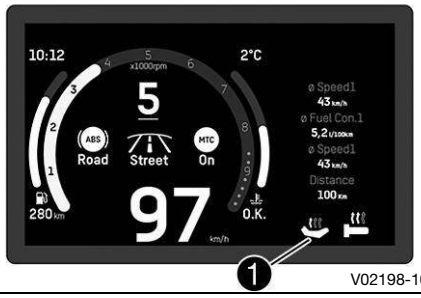

V02198-10

The status of the front rider's seat heating is shown in area ❶ of the display.
The heated rider seat can be configured in the **Heating** menu.

Note
The heating level for the passenger seat heating (optional) can be controlled by a switch next to the right grab handle.

7.21 Favorites display

V02199-10

Up to four items of information are shown on the **Favorites** indicator.
The **Favorites** indicator can be freely configured in the **Favorites** menu.

7.22 Navigation display

V02201-01

The **Navigation** indicator appears when the navigation function is activated.
Display **Navigation** shows the direction arrow, the distance to the destination, the estimated time of arrival of the cell phone, the distance to the next waypoint and the street name.

Note
If the visual navigation is activated, the **Favorites** indicator is hidden.

7.23 Call display

V02202-01

WARNING

Danger of accidents Headphone volume which is too high distracts attention from traffic activity.

– Always select headphone volume which is low enough for you to still clearly hear acoustic signals.

The **Call** indicator appears for incoming or active calls.
Press the **SET** button to accept an incoming call.
Press the **BACK** button to reject an incoming call.
Press the **UP** button to increase the audio volume.
Press the **DOWN** button to reduce the audio volume.

Note

It is not possible to change the audio volume using the combination switch with every cell phone.

The call duration and contact are displayed. Depending on the cell phone settings, the contact is shown by name.

You cannot navigate in the menu during an active phone conversation.

7.24 Menu

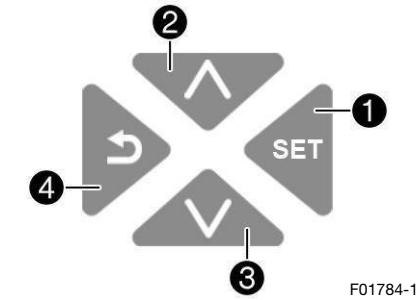

F01784-10

Note

Press the **SET** button ❶ in the start screen to open the menu.

Navigate through the menu using the **UP** button ❷ or the **DOWN** button ❸.

By pressing the **BACK** button ❹, the menu structure jumps one step back, or the menu is closed.

7.24.1 Motorcycle

– Press the **SET** button when the menu is closed.
– Press the **UP** or **DOWN** button until **Motorcycle** is highlighted. Pressing the **SET** button opens the menu.

In **Motorcycle**, you can set the riding mode, ABS mode, traction control, motor slip regulation, Easy Shift, heated rider seat, grip heater, and interface.

When the **Ride Mode Explorer** (optional) is activated, the characteristics of the throttle response and slip on the rear wheel can also be configured.

7.24.2 Ride Mode

Condition: Start button/kill switch on (middle position), Cruise control function deactivated

– Press the **SET** button when the menu is closed.
– Press the **UP** or **DOWN** button until **Motorcycle** is highlighted. Pressing the **SET** button opens the menu.

WARNING

Danger of accidents An incorrectly selected ride mode makes it more difficult to control the vehicle.

The riding modes are each only suitable for certain conditions.

– Always select a riding mode that suits the surface on which you are riding, the weather and the riding situation.

– Press the **UP** or **DOWN** button until **Ride Mode** is highlighted. Press the **SET** button to open the submenu.
– Activate the menu item using the **UP** or **DOWN** button.
– Press the **SET** button to select the **Ride Mode**, which changes coordinated settings for the engine and motorcycle traction control.

Only use riding modes **Street** and **Rain** on asphalt.
Only use riding modes **Offroad** and **Explorer** (optional) on unpaved roads.
Do not open the throttle during the selection.

✓ **Street** - Homologated performance with balanced response; the motorcycle traction control allows normal slip on the rear wheel. The anti-wheelie mode is active. ABS regulates both wheels.

✓ **Rain** - Reduced homologated performance with soft response for improved rideability on surfaces with low road grip; the motorcycle traction control allows very little slip on the rear wheel. The anti-wheelie mode is active. ABS regulates both wheels.

✓ **Offroad**- Reduced homologated performance for better rideability on unpaved roads; the motorcycle traction control allows high slip on the rear wheel. The anti-wheelie mode is deactivated. ABS only controls the front wheel.

✓ **Explorer** (optional) - Setting with homologated performance and extremely direct response. The motorcycle traction control and the characteristics of the throttle response can be set individually. The anti-wheelie mode is deactivated. ABS can be configured separately.

7.24.3 ABS mode

Condition: **Explorer Mode** (optional)

– Press the **SET** button when the menu is closed.
– Press the **UP** or **DOWN** button until **Motorcycle** is highlighted. Pressing the **SET** button opens the menu.
– Press the **UP** or **DOWN** button until **ABS Mode** is highlighted. Press the **SET** button to open the submenu.
– Activate the menu item using the **UP** or **DOWN** button.

WARNING

Danger of accidents An incorrectly selected ABS mode makes it more difficult to control the vehicle.

The ABS modes are each only suitable for certain conditions.

– Always select an ABS mode that suits the ground and the riding situation.

– Press the **SET** button to select the desired ABS mode.

Do not open the throttle during the selection.

Note

The ABS mode can be switched during the journey.

When the ABS mode **Road** is active, ABS controls both wheels.

When the **Offroad** ABS mode is active, ABS only controls the front wheel. The rear wheel is not controlled by ABS and may lock during braking maneuvers.

7.24.4 MTC + MSR

Condition: Cruise control function deactivated

– Press the **SET** button when the menu is closed.
– Press the **UP** or **DOWN** button until **Motorcycle** is highlighted. Pressing the **SET** button opens the menu.
– Press the **UP** or **DOWN** button until **MTC + MSR** is highlighted. Press the **SET** button to open the submenu.
– Activate the menu item using the **UP** or **DOWN** button.
– Switch **SET** on or off by pressing the **MTC + MSR** button.

Do not open the throttle when switching on or off.
Press the **SET** button briefly when activating the motorcycle traction control and the engine traction torque control.
Hold down the **SET** button when switching off the motorcycle traction control and engine traction torque control.

Note

When ABS mode **Offroad** is active, the **MSR** is not active.

After the ignition is switched on, the motorcycle traction control and engine traction torque control are enabled again.

– **SET** Press and hold button for 3–5 seconds.	Switching off the motorcycle traction control and the engine traction torque control.

7.24.5 Easy Shift

– Press the **SET** button when the menu is closed.
– Press the **UP** or **DOWN** button until **Motorcycle** is highlighted. Pressing the **SET** button opens the menu.
– Press the **UP** or **DOWN** button until **Easy Shift** is highlighted. Press the **SET** button to open the submenu.
– Activate the menu item using the **UP** or **DOWN** button.
– Switch Easy Shift (p. 79) on or off by pressing the **SET** button.

7.24.6 Heating (optional)

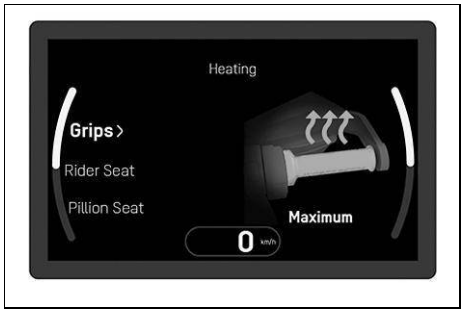

– Press the **SET** button when the menu is closed.
– Press the **UP** or **DOWN** button until **Motorcycle** is highlighted. Pressing the **SET** button opens the menu.
– Press the **UP** or **DOWN** button until **Heating** is highlighted. Press the **SET** button to open the submenu.

The grip heater (optional) and front rider's seat heating (optional) can be configured in **Heating**.

7.24.7 Heating Grips (optional)

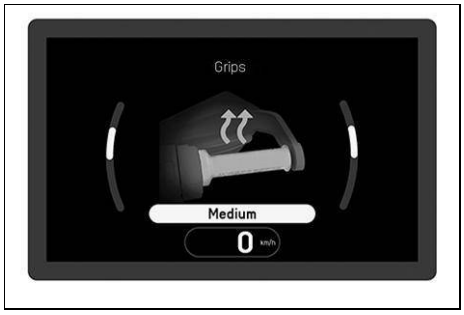

Condition: Model with grip heater, Submenu **Heated Grips** (optional) activated

– Press the **SET** button when the menu is closed.
– Press the **UP** or **DOWN** button until **Motorcycle** is highlighted. Pressing the **SET** button opens the menu.
– Press the **UP** or **DOWN** button until **Heating** is highlighted. Press the **SET** button to open the submenu.
– Press the **UP** or **DOWN** button until **Grips** is highlighted. Press the **SET** button to open the submenu.
– Activate the menu item using the **UP** or **DOWN** button.
– Press the **SET** button to select the heating level or to switch the heated grip on or off.

7.24.8 Heating Rider Seat (optional)

Condition: Model with heated rider seat, Submenu **Heated Seat** (optional) activated

- Press the **SET** button when the menu is closed.
- Press the **UP** or **DOWN** button until **Motorcycle** is highlighted. Pressing the **SET** button opens the menu.
- Press the **UP** or **DOWN** button until **Heating** is highlighted. Press the **SET** button to open the submenu.
- Press the **UP** or **DOWN** button until **Rider Seat** is highlighted. Press the **SET** button to open the submenu.
- Activate the menu item using the **UP** or **DOWN** button.
- Press the **SET** button to select the heating level or to switch the front rider's seat heating on or off.

7.24.9 Interface

- Press the **SET** button when the menu is closed.
- Press the **UP** or **DOWN** button until **Motorcycle** is highlighted. Pressing the **SET** button opens the menu.
- Press the **UP** or **DOWN** button until **Interface** is highlighted. Press the **SET** button to open the submenu.
- Activate the menu item using the **UP** or **DOWN** button.
- Press the **SET** button to select the desired display mode.
  - ✓ **Default** - Display with favorites indicator.
  - ✓ **No Favorites** - Display without a favorites indicator.
  - ✓ **Reduced** (not in explorer riding mode) - Display only with tachometer, gear indicator and speedometer.

7.24.10 Throttle (optional)

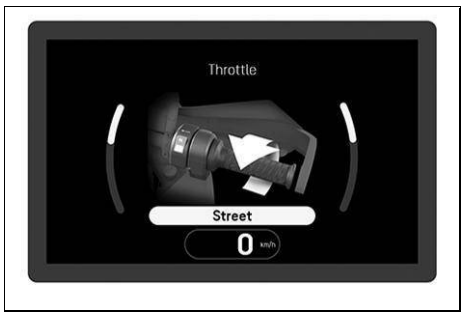

Condition: Ride mode **Explorer** (optional) is activated

- Press the **SET** button when the menu is closed.
- Press the **UP** or **DOWN** button until **Motorcycle** is highlighted. Pressing the **SET** button opens the menu.
- Press the **UP** or **DOWN** button until **Throttle** is highlighted. Press the **SET** button to open the submenu.
- Activate the menu item using the **UP** or **DOWN** button.

  Do not open the throttle when adjusting the throttle response.

- Press the **SET** button to select **Throttle** mode.
  - ✓ **Street** - Balanced response.
  - ✓ **Rally** - Extremely direct response.
  - ✓ **Offroad**- Gentle response.

7.24.11 Slip Adjuster (optional)

Condition: Ride mode **Explorer** (optional) is activated, **MTC + MSR** is activated

- Press the **SET** button when the menu is closed.
- Press the **UP** or **DOWN** button until **Motorcycle** is highlighted. Pressing the **SET** button opens the menu.
- Press the **UP** or **DOWN** button until **Slip Adjuster** is highlighted. Press the **SET** button to open the submenu.
- Activate the menu item using the **UP** or **DOWN** button.
- Press the **SET** button to set the maximum permitted slip for the motorcycle traction control.

Do not open the throttle during the selection.

The spin adjuster is a motorcycle traction control function.

The slip adjustment allows the motorcycle traction control to be tuned through nine levels to the desired characteristic map.

Level 1 allows maximum slip on the rear wheel, and level 9 allows the minimum.

If the cruise control function is deactivated, the **UP** and **DOWN** buttons in the main display or in the **Slip Adjuster** menu can be used to adjust the **Slip Adjuster**.

Note

The slip adjustment is only available in **Explorer** riding mode (optional).

The spin adjuster is only available when motorcycle traction control is activated.

7.24.12 Bike info

- Press the **SET** button when the menu is closed.
- Press the **UP** or **DOWN** button until **Bike Info** is highlighted. Pressing the **SET** button opens the menu.

General information and warnings that may be present can be called up in **Bike Info**.

7.24.13 Bike info

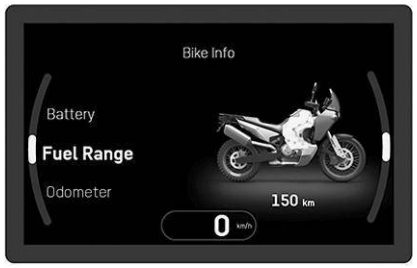

- Press the **SET** button when the menu is closed.
- Press the **UP** or **DOWN** button until **Bike Info** is highlighted. Press the **SET** button to open the menu.

Tire Pressure (optional function) shows the current tire pressure of the front and rear tires.

Water displays the coolant temperature.

Fuel Range indicates the possible fuel range you can cover with the fuel reserve.

Battery displays the battery voltage.

Odometer displays the total mileage.

Service displays when the next service is due.

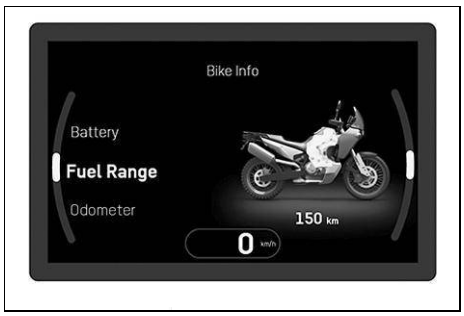

Warnings displays warnings that have occurred until they are no longer active.

7.24.14 Trip info

– Press the **SET** button when the menu is closed.
– Press the **UP** or **DOWN** button until **Trip Info** is highlighted. Pressing the **SET** button opens the menu.

General information on the distance traveled, trip time, average fuel consumption and average speed can be accessed in **Trip**.

7.24.15 Trip 1

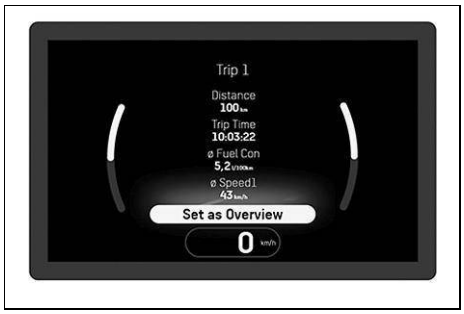

– Press the **SET** button when the menu is closed.
– Press the **UP** or **DOWN** button until **Trip Info** is highlighted. Press **SET** button to open the menu.
– Press the **UP** or **DOWN** button until **Trip 1** is highlighted. Press the **SET** button to open the submenu.

Information on **Trip 1** can be accessed in the **Trip 1** menu.

Note

Distance displays the distance since the last reset, e.g. between two refueling stops. **Distance** runs along and counts to **9999**.

Trip Time shows the riding time on the basis of **Distance** and runs as soon as a speed signal is received.

ØFuel Con indicates the average fuel consumption based on **Distance**.

ØSpeed1 indicates the average speed based on **Distance** and **Trip Time**.

Note

Press the **UP** or **DOWN** button until **Reset Trip** is highlighted. Press the **SET** button to reset all entries in the **Trip 1** menu.

7.24.16 Trip 2

– Press the **SET** button when the menu is closed.
– Press the **UP** or **DOWN** button until **Trip Info** is highlighted. Press **SET** button to open the menu.
– Press the **UP** or **DOWN** button until **Trip 2** is highlighted. Press the **SET** button to open the submenu.

Information on **Trip 2** can be accessed in the **Trip 2** menu.

Note

Distance displays the distance since the last reset, e.g. between two refueling stops. **Distance** runs along and counts to **9999**.

Trip Time shows the riding time on the basis of **Distance** and runs as soon as a speed signal is received.

ØFuel Con indicates the average fuel consumption based on **Distance**.

ØSpeed2 indicates the average speed based on **Distance** and **Trip Time**.

Note

Press the **UP** or **DOWN** button until **Reset Trip** is highlighted. Press the **SET** button to reset all entries in the **Trip 2** menu.

7.24.17 Navigation

Condition: Function **Bluetooth®** activated, **Ride Husqvarna Navigation** app is installed and opened on a suitable cell phone (**Android®** devices from version 6.0, iOS devices from version 10), The dashboard is connected to a suitable cell phone, GPS function is activated on the connected cell phone, For voice navigation: The dashboard is connected to a suitable communication system and an appropriate language package has been downloaded in the **Ride Husqvarna Navigation** app (optional).

– Press the **SET** button when the menu is closed.
– Press the **UP** or **DOWN** button until **Ride Husqvarna Navigation** is highlighted. Pressing the **SET** button opens the menu.
– Press the **UP** or **DOWN** button until **Navigation** is highlighted. Press the **SET** button to open the submenu.
– Activate the menu item using the **UP** or **DOWN** button.
– Press the **SET** button to switch the visual navigation on or off.

Note

Voice navigation remains switched on if it has been activated.

The volume of the activated voice navigation is identical to the volume of the audio player on the cell phone. If the volume on the cell phone is changed, the volume of the activated voice navigation also changes.

7.24.18 Last search (optional)

Condition: Function **Bluetooth®** activated, **Ride Husqvarna** app (optional) is installed and opened on a suitable cell phone (Android devices from version 7.0, iOS devices from version 13), The dashboard is connected to a suitable cell phone, GPS function is activated on the connected cell phone

- Press the **SET** button when the menu is closed.
- Press the **UP** or **DOWN** button until **Ride Husqvarna Navigation** is highlighted. Pressing the **SET** button opens the menu.
- Press the **UP** or **DOWN** button until **Navigation** is highlighted. Press the **SET** button to open the submenu.
- Activate the menu item using the **UP** or **DOWN** button.
- Press the **SET** button to switch the visual navigation on or off.

Note

Voice navigation remains switched on if it has been activated.

The volume of the activated voice navigation is identical to the volume of the audio player on the cell phone. If the volume on the cell phone is changed, the volume of the activated voice navigation also changes.

- Press the **UP** or **DOWN** button until **Last search** is highlighted. Press the **SET** button to open the submenu
- Press the **UP** or **DOWN** button to select an address
- Press the **SET** button to confirm the selection and start navigation

Note

The last 10 addresses searched for in the **Ride Husqvarna** app (optional) are saved in **Last search**

7.24.19 Favorites (optional)

Condition: Function **Bluetooth®** activated, **Ride Husqvarna** app (optional) is installed and opened on a suitable cell phone (Android devices from version 7.0, iOS devices from version 13), The dashboard is connected to a suitable cell phone, GPS function is activated on the connected cell phone, Favorites are saved in the **Ride Husqvarna** app (optional)

- Press the **SET** button when the menu is closed.
- Press the **UP** or **DOWN** button until **Ride Husqvarna Navigation** is highlighted. Pressing the **SET** button opens the menu.
- Press the **UP** or **DOWN** button until **Navigation** is highlighted. Press the **SET** button to open the submenu.
- Activate the menu item using the **UP** or **DOWN** button.
- Press the **SET** button to switch the visual navigation on or off.

Note

Voice navigation remains switched on if it has been activated.

The volume of the activated voice navigation is identical to the volume of the audio player on the cell phone. If the volume on the cell phone is changed, the volume of the activated voice navigation also changes.

- Press the **UP** or **DOWN** button until **Favorites** is highlighted. Press the **SET** button to open the submenu.
- Press the **UP** or **DOWN** button to select an address.
- Press the **SET** button to confirm the selection and start navigation.

Note

In **Favorites**,10 addresses can be stored in the **Ride Husqvarna** app (optional).

7.24.20 Skip Waypoint (optional)

Condition: Navigation with at least one interim destination has been started in the **Ride Husqvarna** app.

- Press the **SET** button when the menu is closed.
- Press the **UP** or **DOWN** button until **Ride Husqvarna Navigation** is highlighted. Pressing the **SET** button opens the menu.
- Press the **UP** or **DOWN** button until **Navigation** is highlighted. Press the **SET** button to open the submenu.
- Activate the menu item using the **UP** or **DOWN** button.
- Press the **SET** button to switch the visual navigation on or off.

Note

Voice navigation remains switched on if it has been activated.

The volume of the activated voice navigation is identical to the volume of the audio player on the cell phone. If the volume on the cell phone is changed, the volume of the activated voice navigation also changes.

- Press the **UP** or **DOWN** button until **Skip Waypoint** is highlighted. Press the **SET** button to select the waypoint.
- Press the **SET** button again to confirm the selection and remove the waypoint.

7.24.21 Volume (optional)

Condition: The **Ride Husqvarna** app (optional) is installed and opened on a suitable cell phone (**Android®** devices from version 6.0, iOS devices from version 10)., Dashboard is connected to a suitable cell phone, For voice navigation: The dashboard is connected to a suitable communication system and an appropriate language package has been downloaded in the **Ride Husqvarna** app (optional).

- Press the **SET** button when the menu is closed.
- Press the **UP** or **DOWN** button until **Ride Husqvarna Navigation** is highlighted. Pressing the **SET** button opens the menu.
- Press the **UP** or **DOWN** button until **Navigation** is highlighted. Press the **SET** button to open the submenu.
- Activate the menu item using the **UP** or **DOWN** button.
- Press the **SET** button to switch the visual navigation on or off.

Note

Voice navigation remains switched on if it has been activated.

The volume of the activated voice navigation is identical to the volume of the audio player on the cell phone. If the volume on the cell phone is changed, the volume of the activated voice navigation also changes.

WARNING

Danger of accidents Headphone volume which is too high distracts attention from traffic activity.

- Always select headphone volume which is low enough for you to still clearly hear acoustic signals.

- Press the **UP** or **DOWN** button until **Volume** is highlighted. Press the **SET** button to open the submenu.
- Press the **UP** button to increase the volume of the activated voice navigation.
- Press the **DOWN** button to reduce the volume of the activated voice navigation.

7.24.22 Stop Navigation (optional)

Condition: Function **Bluetooth®** activated, **Ride Husqvarna** app (optional) is installed and opened on a suitable cell phone (Android devices from version 7.0, iOS devices from version 13), Dashboard is connected to a suitable cell phone

- Press the **SET** button when the menu is closed.
- Press the **UP** or **DOWN** button until **Ride Husqvarna Navigation** is highlighted. Pressing the **SET** button opens the menu.
- Press the **UP** or **DOWN** button until **Navigation** is highlighted. Press the **SET** button to open the submenu.
- Activate the menu item using the **UP** or **DOWN** button.
- Press the **SET** button to switch the visual navigation on or off.

Note

Voice navigation remains switched on if it has been activated.

The volume of the activated voice navigation is identical to the volume of the audio player on the cell phone. If the volume on the cell phone is changed, the volume of the activated voice navigation also changes.

– Press the **UP** or **DOWN** button until **Stop Navigation** is highlighted. Press the **SET** button to confirm the selection.
– Press the **SET** button again to confirm the selection and end navigation.

7.24.23 Audio (optional)

Condition: Function **Bluetooth®** activated, The dashboard is connected to a suitable cell phone, The dashboard is connected to a suitable audio device or **Headset Type Corded** is selected.

– Press the **SET** button when the menu is closed.

WARNING

Danger of accidents Headphone volume which is too high distracts attention from traffic activity.

– Always select headphone volume which is low enough for you to still clearly hear acoustic signals.

– Press the **UP** or **DOWN** button until **Audio** is highlighted. Pressing the **SET** button opens the menu.
– Press and hold **UP** button to increase the audio volume.
– Press and hold **DOWN** button to reduce the audio volume.
– Press **UP** button briefly to change to the next audio track.
– Briefly pressing the **DOWN** button once or twice replays the current audio track from the start or changes to the previous audio track, depending on the cell phone model.
– Press **SET** button to play or pause the audio track.

Note

With some cell phones, the cell phone audio player needs to be started before playback is possible.

The audio function can be added to **Quick Selector Up** or **Quick Selector Down** for easier operation.

7.24.24 Call out

Condition: Dashboard is connected to a suitable cell phone, Dashboard is connected to a suitable audio device

- Press the **SET** button when the menu is closed.
- Press **UP** or **DOWN** button until **Call** appears. Pressing the **SET** button opens the menu.
- Press the **UP** or **DOWN** button until **Last Calls** or **Favourites** is highlighted. Press the **SET** button to open the submenu.
- Press the **UP** or **DOWN** button until the desired person is marked.
- Press the **SET** button.
  ✓ The selected person is called.

7.24.25 Settings

Condition: Motorcycle is stationary

- Press the **SET** button when the menu is closed.
- Press the **UP** or **DOWN** button until **Settings** is highlighted. Pressing the **SET** button opens the menu.

In the **Settings** menu, favorites, quick selections, **Ride Husqvarna** (optional), and the shift warning light can be configured. Settings can be made for units or various values. Several functions can be enabled or disabled.

7.24.26 favorites

Condition: Motorcycle is stationary

- Press the **SET** button when the menu is closed.
- Press the **UP** or **DOWN** button until **Settings** is highlighted. Press the **SET** button to open the menu.
- Press the **UP** or **DOWN** button until **Favorites** is highlighted. Press the **SET** button to open the submenu.

In **Favorites**, up to four items of information can be selected and displayed on the **Favorites** indicator on the display.

7.24.27 Favorites-display 1 - 4

Condition: Motorcycle is stationary

- Press the **SET** button when the menu is closed.
- Press the **UP** or **DOWN** button until **Settings** is highlighted. Press the **SET** button to open the menu.
- Press the **UP** or **DOWN** button until **Favorites** is highlighted. Press the **SET** button to open the submenu.
- Press the **UP** or **DOWN** button to select **Favorites 1**, **Favorites 2**, **Favorites 3**, or **Favorites 4**. Press the **SET** button to open the submenu.
- Press the **UP** or **DOWN** button to select the desired information. Press the **SET** button to confirm the selection.

7.24.28 Quick selector up

Condition: Motorcycle is stationary

- Press the **SET** button when the menu is closed.
- Press the **UP** or **DOWN** button until **Settings** is highlighted. Press the **SET** button to open the menu.
- Press the **UP** or **DOWN** button until **Quick Selector** is highlighted. Press the **SET** button to open the submenu.
- Activate the **UP** menu item using the **DOWN** or **Up** button.
- Press the **SET** button to set a direct selection submenu for **Quick Selector Up**.

Note

When it is closed, the menu set in **UP** is opened by pressing the **Quick Selector Up** button.

Press the **BACK** button to close the **Quick Selector Up** display.

7.24.29 Quick selector down

Condition: Motorcycle is stationary

- Press the **SET** button when the menu is closed.
- Press the **UP** or **DOWN** button until **Settings** is highlighted. Press the **SET** button to open the menu.
- Press the **UP** or **DOWN** button until **Quick Selector** is highlighted. Press the **SET** button to open the submenu.
- Activate the **UP** menu item using the **DOWN** or **Down** button.
- Press the **SET** button to set a direct selection submenu for **Quick Selector Down**.

Note

When it is closed, the menu set in **DOWN** is opened by pressing the **Quick Selector Down** button.

Press the **BACK** button to close the **Quick Selector Down** display.

7.24.30 Ride Husqvarna (optional)

Condition: Motorcycle is stationary

- Press the **SET** button when the menu is closed.
- Press the **UP** or **DOWN** button until **Settings** is highlighted. Pressing the **SET** button opens the menu.
- Press the **UP** or **DOWN** button until **Ride Husqvarna** is highlighted. Press the **SET** button to open the submenu.

A suitable cell phone or communication system can be paired with the combination instrument via **Bluetooth®** in the **Ride Husqvarna** menu.

Note

Not every cell phone or communication system is suitable for pairing with the dashboard.

The standard **Bluetooth®** 2.1 must be supported.

7.24.31 Bluetooth (optional)

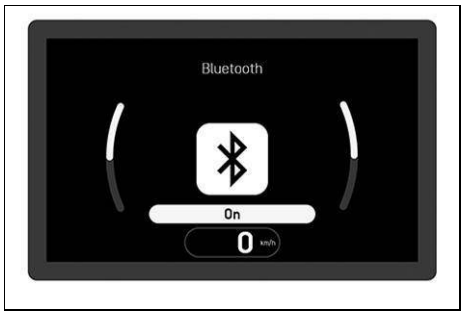

Condition: Motorcycle is stationary

- Press the **SET** button when the menu is closed.
- Press the **UP** or **DOWN** button until **Settings** is highlighted. Pressing the **SET** button opens the menu.
- Press the **UP** or **DOWN** button until **Ride Husqvarna** is marked. Press the **SET** button to open the submenu.
- Press the **UP** or **DOWN** button until **Bluetooth** is highlighted. Press the **SET** button to open the submenu.
- Activate the menu item using the **UP** or **DOWN** button.
- Press the **SET** button to switch the **Bluetooth®** function on or off.

Function **Bluetooth®** must be activated to pair a suitable cell phone or communication system with the vehicle.

Not every cell phone or communication system is suitable for pairing with the vehicle.

7.24.32 Phone Pairing (optional)

Condition: Motorcycle is stationary, Function **Bluetooth®** activated, Function **Bluetooth®** also activated on the device that is to be paired

- Press the **SET** button when the menu is closed.
- Press the **UP** or **DOWN** button until **Settings** is highlighted. Pressing the **SET** button opens the menu.
- Press the **UP** or **DOWN** button until **Ride Husqvarna** is marked. Press the **SET** button to open the submenu.
- Press the **UP** or **DOWN** button until **Phone Pairing** is highlighted. Press the **SET** button to open the submenu.

Note
Only one cell phone can be paired with the vehicle at a time.

- Press the **UP** or **DOWN** button until **New Pairing** is marked. Press the **SET** button to open the submenu.
- The vehicle starts the search for a suitable cell phone. If the search is successful, the name of the cell phone is displayed in menu **New Pairing**. Press the **SET** button to start the pairing.

Note
The cell phone must be visible via **Bluetooth®** in order for the cell phone to be found by the vehicle.

- A message appears on the combination instrument indicating that the vehicle is now ready for pairing. The pairing is successfully completed by confirming the **Passkey** on the cell phone and on the dashboard.

Note
Press the **UP** or **DOWN** button until **Delete Pairing** is highlighted. The paired device can be deleted by pressing the **SET** button.

Not every cell phone is suitable for pairing with the vehicle.

– Move the previously paired device into the range of the vehicle while the **Bluetooth®** function is active.
  ✓ The device is automatically connected with the vehicle.
  ✗ If the device is not automatically connected with the vehicle after approx. 30 seconds:
    – Switch on the vehicle again or repeat the **New Pairing** procedure.

A suitable cell phone can be paired with the vehicle in menu **New Pairing**.

7.24.33 Riders Headset (optional)

Condition: Motorcycle is stationary, Function **Bluetooth®** activated, Function **Bluetooth®** also activated on the device that is to be paired

– Press the **SET** button when the menu is closed.
– Press the **UP** or **DOWN** button until **Settings** is highlighted. Pressing the **SET** button opens the menu.
– Press the **UP** or **DOWN** button until **Ride Husqvarna** is marked. Press the **SET** button to open the submenu.
– Press the **UP** or **DOWN** button until **Riders Headset** is highlighted. Press the **SET** button to open the submenu.
– Press the **UP** or **DOWN** button until **New Pairing** is marked. Press the **SET** button to open the submenu.
– The vehicle starts searching for a suitable headset. If the search was successful, the name of the rider's audio device is displayed in the **New Pairing** submenu. Press the **SET** button to start the pairing.

Note

The headset must be in pairing mode for the vehicle to find the headset. Follow the instructions in the headset owner's manual.

Press the **UP** or **DOWN** button until **Delete Pairing** is highlighted. The paired device can be deleted by pressing the **SET** button.

Not every headset is suitable for pairing with the vehicle.

– Move the previously paired device into the range of the vehicle while the **Bluetooth®** function is active.
  ✓ The device is automatically connected with the vehicle.
  ✗ If the device is not automatically connected with the vehicle after approx. 30 seconds:
    – Switch on the vehicle again or repeat the **New Pairing** procedure.

In the **Riders Headset** menu, a suitable rider headset can be paired with the vehicle.

7.24.34 Headset Type (optional)

Condition: Motorcycle is stationary

- Press the **SET** button when the menu is closed.
- Press the **UP** or **DOWN** button until **Settings** is highlighted. Pressing the **SET** button opens the menu.
- Press the **UP** or **DOWN** button until **Ride Husqvarna** is marked. Press the **SET** button to open the submenu.
- Press the **UP** or **DOWN** button until **Headset Type** is highlighted. Press the **SET** button to change the rider audio device type.

The connection mode for the rider headset can be selected in the **Headset Type** menu.

The headset is connected to the vehicle wirelessly via **Bluetooth®** in **Bluetooth Headset** mode.

The headset is connected directly to the smartphone by a cable in **Corded Headset** mode.

Note

The **Riders Headset** menu item is only available in **Headset Type Bluetooth**.

7.24.35 Shift Light

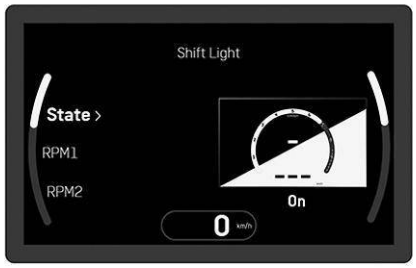

Condition: Motorcycle is stationary, **ODO** > 1000 km (621 mi)

- Press the **SET** button when the menu is closed.
- Press the **UP** or **DOWN** button until **Settings** is highlighted. Press the **SET** button to open the menu.
- Press the **UP** or **DOWN** button until **Shift Light** is highlighted. Press the **SET** button to open the submenu.

The speed for the shift warning light can be set in **Shift Light**.

7.24.36 Shift light state

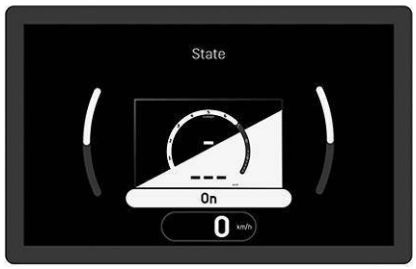

Condition: Motorcycle is stationary

- Press the **SET** button when the menu is closed.
- Press the **UP** or **DOWN** button until **Settings** is highlighted. Press the **SET** button to open the menu.
- Press the **UP** or **DOWN** button until **Shift Light** is highlighted. Press the **SET** button to open the submenu.
- Press the **UP** or **DOWN** button until **State** is highlighted. Press the **SET** button to open the submenu.
- Activate the menu item using the **UP** or **DOWN** button.
- Press the **SET** button to switch the shift warning light on or off.

7.24.37 Shift light RPM1

Condition: Motorcycle is stationary

- Press the **SET** button when the menu is closed.
- Press the **UP** or **DOWN** button until **Settings** is highlighted. Press the **SET** button to open the menu.
- Press the **UP** or **DOWN** button until **Shift Light** is highlighted. Press the **SET** button to open the submenu.
- Press the **UP** or **DOWN** button until **RPM1** is highlighted. Press the **SET** button to open the submenu.
- Activate the menu item using the **UP** or **DOWN** button.
- Press the **SET** button to switch the value for **RPM1** on or off.

RPM1 must not be larger than **RPM2**.

Note

RPM1 can be set in intervals of 500 between 5,500 and 10,000 rpm.

If the engine speed reaches set value **RPM1**, the shift warning light flashes yellow.

7.24.38 Shift light RPM2

Condition: Motorcycle is stationary

- Press the **SET** button when the menu is closed.
- Press the **UP** or **DOWN** button until **Settings** is highlighted. Press the **SET** button to open the menu.
- Press the **UP** or **DOWN** button until **Shift Light** is highlighted. Press the **SET** button to open the submenu.
- Press the **UP** or **DOWN** button until **RPM2** is highlighted.
- Activate the menu item using the **UP** or **DOWN** button.
- Press the **SET** button to switch the value for **RPM2** on or off.

RPM2 must not be smaller than **RPM1**

Note

RPM2 can be set in intervals of 500 between 7,000 and 10,000 rpm.

If the engine speed reaches set value **RPM2**, the entire display flashes yellow.

7.24.39 Clock & date

Condition: Motorcycle is stationary

- Press the **SET** button when the menu is closed.
- Press the **UP** or **DOWN** button until **Settings** is highlighted. Press the **SET** button to open the menu.
- Press the **UP** or **DOWN** button until **Clock & Date** is highlighted.
- Press the **SET** button to open the submenu.

Set the time, date and display formats in **Clock & Date**.

7.24.40 Clock format

Condition: Motorcycle is stationary

- Press the **SET** button when the menu is closed.
- Press the **UP** or **DOWN** button until **Settings** is highlighted. Press the **SET** button to open the menu.
- Press the **UP** or **DOWN** button until **Clock & Date** is highlighted.
- Press the **UP** or **DOWN** button until **Clock Format** is highlighted. Press the **SET** button to open the submenu.
- Activate the menu item using the **UP** or **DOWN** button.
- Press the **SET** button to select the time format.

7.24.41 Date format

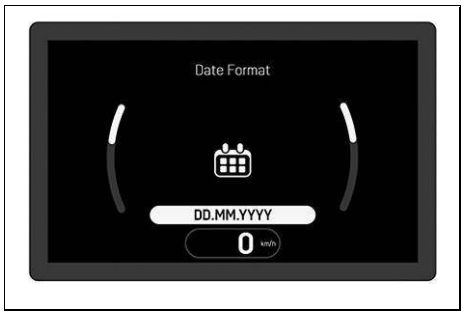

Condition: Motorcycle is stationary

- Press the **SET** button when the menu is closed.
- Press the **UP** or **DOWN** button until **Settings** is highlighted. Press the **SET** button to open the menu.
- Press the **UP** or **DOWN** button until **Clock & Date** is highlighted.
- Press the **UP** or **DOWN** button until **Date Format** is highlighted. Press the **SET** button to open the submenu.
- Activate the menu item using the **UP** or **DOWN** button.
- Press the **SET** button to select the date format.

7.24.42 Units

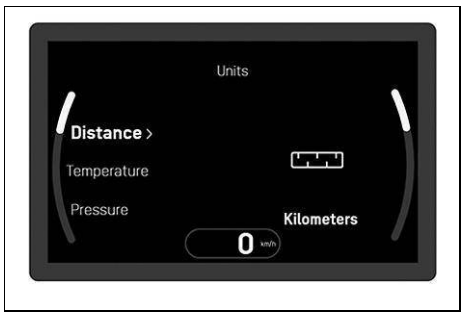

Condition: Motorcycle is stationary

- Press the **SET** button when the menu is closed.
- Press the **UP** or **DOWN** button until **Settings** is highlighted. Press the **SET** button to open the menu.
- Press the **UP** or **DOWN** button until **Units** is highlighted. Press the **SET** button to open the submenu.

The **Units** submenu allows settings to be made for units or various values.

7.24.43 Distance

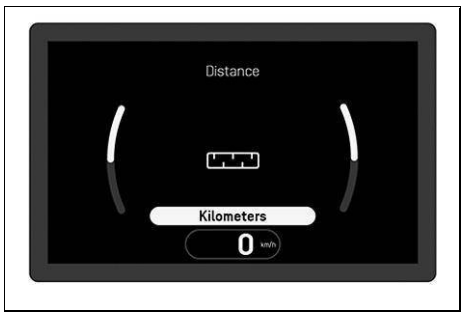

Condition: Motorcycle is stationary

- Press the **SET** button when the menu is closed.
- Press the **UP** or **DOWN** button until **Settings** is highlighted. Press the **SET** button to open the menu.
- Press the **UP** or **DOWN** button until **Units** is highlighted. Press the **SET** button to open the submenu.
- Press the **UP** or **DOWN** button until **Distance** is marked. Press the **SET** button to open the submenu.
- Activate the menu item using the **UP** or **DOWN** button.
- Press the **SET** button to confirm the desired unit.

Note
Kilometers and miles can be set.

7.24.44 Temperature

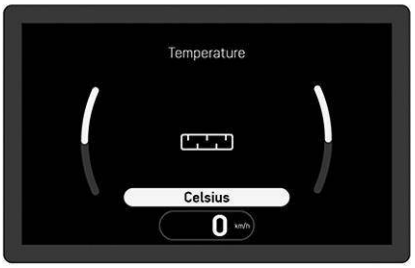

Condition: Motorcycle is stationary

- Press the **SET** button when the menu is closed.
- Press the **UP** or **DOWN** button until **Settings** is highlighted. Press the **SET** button to open the menu.
- Press the **UP** or **DOWN** button until **Units** is highlighted. Press the **SET** button to open the submenu.
- Press the **UP** or **DOWN** button until **Temperature** is marked. Press the **SET** button to open the submenu.
- Activate the menu item using the **UP** or **DOWN** button.
- Press the **SET** button to confirm the desired unit.

Note
Celsius and Fahrenheit can be set.

7.24.45 Pressure

Condition: Motorcycle is stationary

- Press the **SET** button when the menu is closed.
- Press the **UP** or **DOWN** button until **Settings** is highlighted. Press the **SET** button to open the menu.
- Press the **UP** or **DOWN** button until **Units** is highlighted. Press the **SET** button to open the submenu.
- Press the **UP** or **DOWN** button until **Pressure** is marked. Press the **SET** button to open the submenu.
- Activate the menu item using the **UP** or **DOWN** button.
- Press the **SET** button to confirm the desired unit.

7.24.46 Consumption

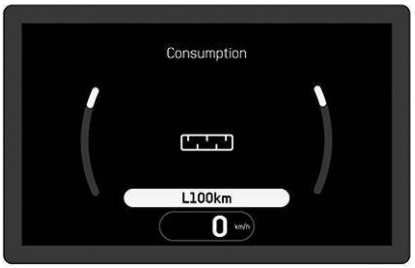

Condition: Motorcycle is stationary

- Press the **SET** button when the menu is closed.
- Press the **UP** or **DOWN** button until **Settings** is highlighted. Press the **SET** button to open the menu.
- Press the **UP** or **DOWN** button until **Units** is highlighted. Press the **SET** button to open the submenu.
- Press the **UP** or **DOWN** button until **Consumption** is marked. Press the **SET** button to open the submenu.
- Activate the menu item using the **UP** or **DOWN** button.
- Press the **SET** button to confirm the desired unit.

7.24.47 Language

Condition: Motorcycle is stationary

- Press the **SET** button when the menu is closed.
- Press the **UP** or **DOWN** button until **Settings** is highlighted. Press the **SET** button to open the menu.
- Press the **UP** or **DOWN** button until **Language** is highlighted. Press the **SET** button to open the submenu.
- Activate the menu item using the **UP** or **DOWN** button.
- Press the **SET** button to confirm the desired language.

Note

The menu languages are US English, UK English, German, Italian, French, and Spanish.

7.24.48 Extra Functions

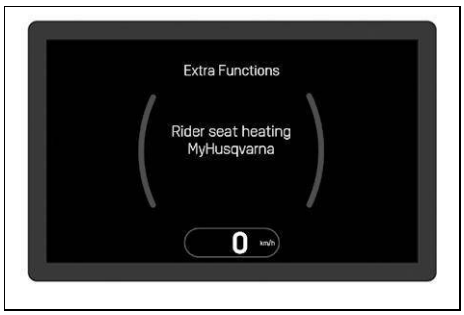

Condition: Motorcycle is stationary, Motorcycle with optional supplementary function

- Press the **SET** button when the menu is closed.
- Press the **UP** or **DOWN** button until **Settings** is highlighted. Press the **SET** button to open the menu.
- Press the **UP** or **DOWN** button until **Extra Functions** is highlighted. Press the **SET** button to open the submenu.
- Use the **UP** or **DOWN** button to navigate through the extra functions.

Note

The optional extra functions are listed.

The current accessories and available software are listed on the **Husqvarna Mobility** website.

7.24.49 Setting the time and date

Condition: Motorcycle is stationary

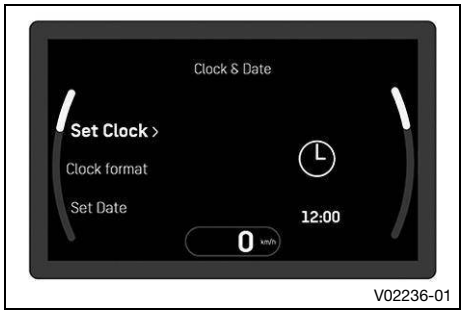

- Press the **SET** button when the menu is closed.
- Press the **UP** or **DOWN** button until **Settings** is highlighted. Pressing the **SET** button opens the menu.
- Press the **UP** or **DOWN** button until **Clock & Date** is highlighted. Press the **SET** button to open the submenu.

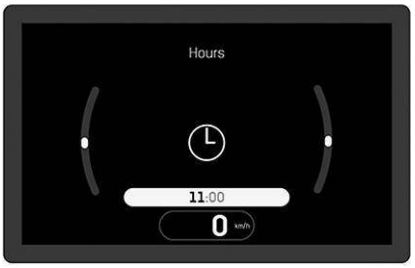

V02249-01

Setting the clock

- Press the **UP** or **DOWN** button until **Set Clock** is highlighted. Press the **SET** button to open the submenu.
- Press the **UP** or **DOWN** button until **Hours** is highlighted. Press the **SET** button to open the submenu.
- Press the **UP** or **DOWN** button until the hour is correctly set.
- Press the **SET** button.
  ✓ The selected hour is stored.
- Press the **UP** or **DOWN** button until **Minutes** is highlighted. Press the **SET** button to open the submenu.
- Press the **UP** or **DOWN** button until the minute is correctly set.
- Press the **SET** button.
  ✓ The selected minute is stored.

V02250-01

Setting the date

- Press the **UP** or **DOWN** button until **Set Date** is highlighted. Press the **SET** button to open the submenu.
- Press the **UP** or **DOWN** button until **Day** is highlighted. Press the **SET** button to open the submenu.
- Press the **UP** or **DOWN** button until the day is correctly set.
- Press the **SET** button.
  ✓ The selected day is stored.
- Press the **UP** or **DOWN** button until **Month** is highlighted. Press the **SET** button to open the submenu.
- Press the **UP** or **DOWN** button until the month is correctly set.
- Press the **SET** button.
  ✓ The selected month is stored.
- Press the **UP** or **DOWN** button until **Year** is highlighted. Press the **SET** button to open the submenu.
- Press the **UP** or **DOWN** button until the year is correctly set.
- Press the **SET** button.
  ✓ The selected year is stored.

8.1 Setting the front rider's seat

Preparatory work

– Remove the passenger seat. (p. 99)
– Remove the front rider's seat. (p. 99)

Main work

– Select one of the following alternatives.

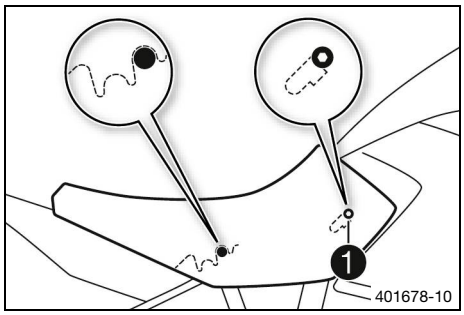

  – Attach the front rider's seat to the fuel tank at the recesses ❶, and push the front rider's seat down and forward at the same time.

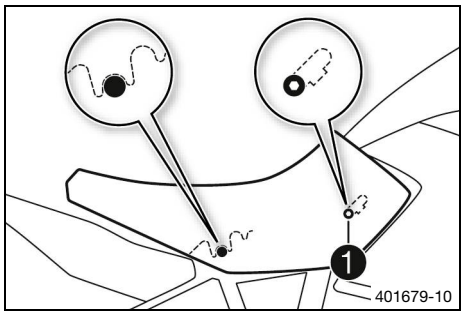

  – Attach the front rider's seat to the fuel tank at the recesses ❶, and push the rider's seat up and forward at the same time.
– Check that the front rider's seat is mounted correctly.

Reworking

– Mount the passenger seat. (p. 99)

8.2 Handlebar position

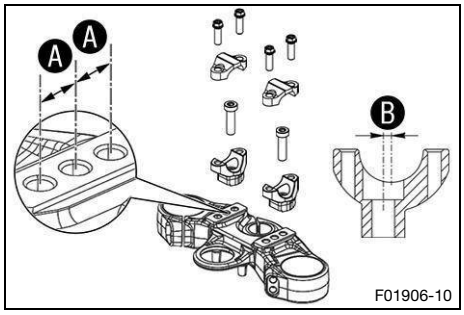

On the upper triple clamp, there are three holes at a distance of Ⓐ to each other.
The holes on the handlebar mounts are placed at a distance of Ⓑ from the center.

Hole distance Ⓐ	15 mm (0.59 in)
Hole distance Ⓑ	3.5 mm (0.138 in)

The handlebar can be mounted in six different positions. This allows the handlebar to be mounted in the most comfortable position for the rider.

8.3 Adjusting the handlebar position

WARNING

Danger of accidents A repaired handlebar poses a safety risk.

If the handlebar is bent or straightened, the material becomes fatigued. The handlebar may break as a result.

– Change the handlebar if the handlebar is damaged or bent.

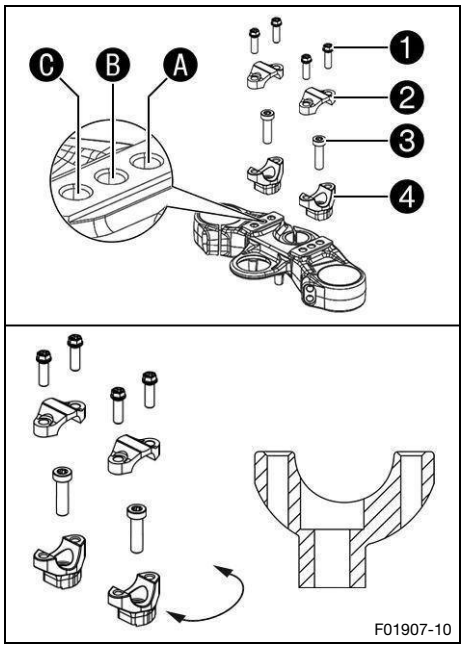

– Remove screws ❶. Take off the handlebar clamps ❷.
– Position the handlebar so that screws ❸ are accessible.

Protect the components against damage by covering them.
Do not kink the cables or lines.

– Remove screws ❸.
– Take off handlebar supports ❹.
– Move the handlebar supports into the desired position Ⓐ, Ⓑ or Ⓒ.
– Mount and tighten screws ❸.

Mount the left and right handlebar supports in the same position.

Screw, handlebar mount	
M10×35	45 Nm (33.2 ft·lb$_f$) **Loctite® 243**

– Position the handlebar.

Make sure the cables and wiring are positioned correctly.

– Position the handlebar clamps.
– Mount screws ❶ and tighten evenly.

Screw, handlebar clamp	
M8×25	20 Nm (14.8 ft·lb$_f$)

8.4 Adjusting the basic position of the clutch lever

– Push clutch lever forward.
– Adjust the basic position of the clutch lever to your hand size by turning adjusting screw ❶.

Only turn the adjusting screw by hand, and do not use force.
Do not make any adjustments while riding.

Note

The range of adjustment is limited.

When the adjusting screw is turned clockwise, the clutch lever moves closer to the handlebar.

When the adjusting screw is turned counterclockwise, the clutch lever moves away from the handlebar.

8.5 Adjusting the basic position of the hand brake lever

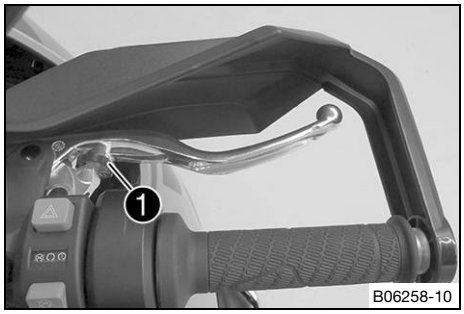

– Push hand brake lever forward.
– Adjust basic position of the hand brake lever to your hand size by turning adjusting screw ❶.

Only turn the adjusting screw by hand, and do not use force.
Do not make any adjustments while riding.

Note

Turn the adjusting screw clockwise to decrease the distance between the hand brake lever and the handlebar.

Turn the adjusting screw counterclockwise to increase the distance between the hand brake lever and the handlebar.

The range of adjustment is limited.

8.6 Adjusting foot brake lever stub

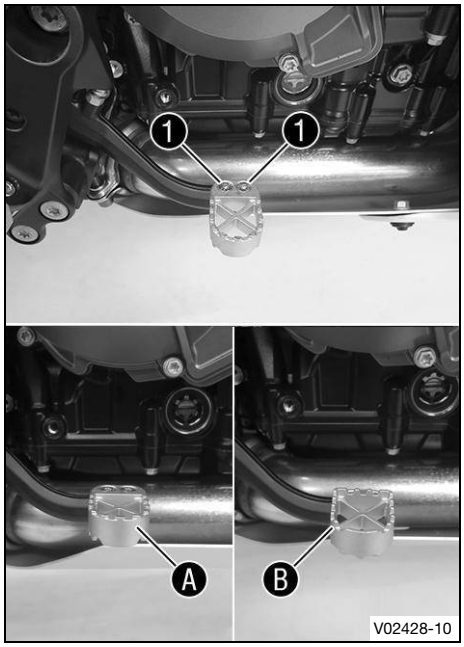

– Remove screws ❶ with the foot brake lever stub.
– Move the foot brake lever stub into desired position Ⓐ or Ⓑ. Mount and tighten screws ❶.

Screw, foot brake lever stub	
M5×16	10 Nm (7.4 ft·lb$_f$) **Loctite® 243**

8.7 Adjusting the basic position of the brake pedal

WARNING
Danger of accidents The brake system fails in the event of overheating.
If there is no free travel on the brake lever, pressure builds up in the brake system.
– Set the free travel on the brake lever as specified.

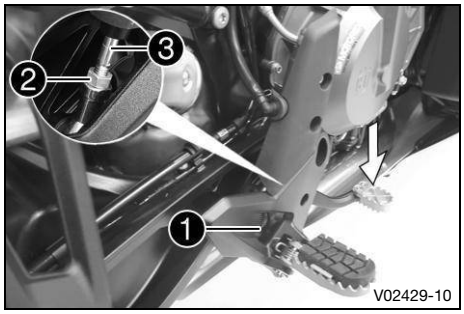

– Detach spring ❶.
– Loosen nut ❷.

Tip
Press the foot brake lever downwards to make this easier.

– Turn the push rod ❸ to set the basic position of the foot brake lever.

The screw must be screwed in by at least five full turns.

Note
The range of adjustment is limited.
Screwing the push rod into the ball joint adjusts the foot brake lever downwards.
Screwing the push rod out of the ball joint adjusts the brake lever upwards.

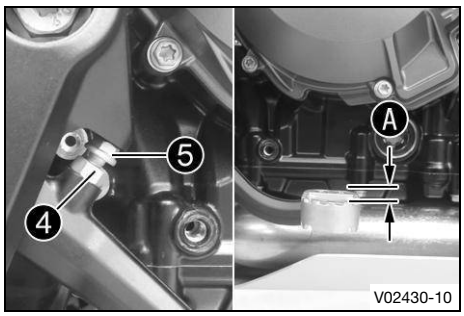

– Loosen nut ❹ and turn screw ❺ correspondingly until the free travel Ⓐ is present. If necessary, adjust the basic position of the brake pedal.

Free travel of brake pedal	3 mm … 5 mm (0.12 in … 0.20 in)

– Hold screw ❺ and tighten nut ❹.

Nut, foot brake lever adjustment	
M6	6 Nm (4.4 ft·lb$_f$)

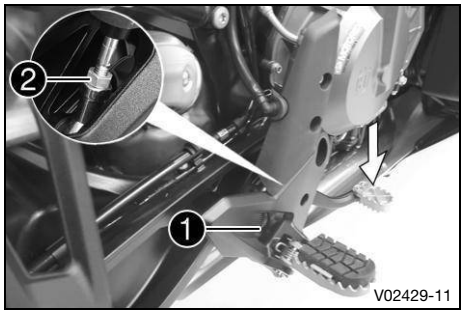

– Tighten nut ❷.

Nut, push rod, foot brake lever	
M6	6 Nm (4.4 ft·lb$_f$)

Tip
Press the foot brake lever downwards to make this easier.

– Attach spring ❶.

8.8 Checking the basic position of the gear shift lever

Note
When driving, the gear shift lever must not touch the rider's boot when in the basic position.
If the shift lever is permanently touching the boot, the transmission will be subject to excessive load; this can cause a malfunction of the Easy Shift.

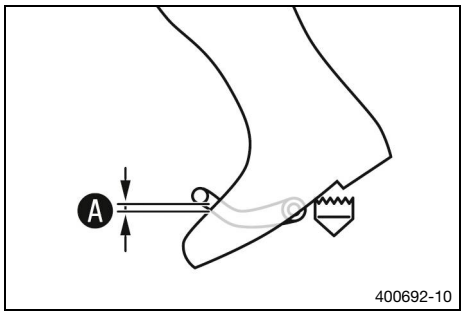

– Sit on the vehicle in the riding position and measure the distance Ⓐ between the upper edge of your boot and the shift lever.

Distance between the gear shift lever and upper edge of boot	10 mm … 20 mm (0.39 in … 0.79 in)

» If the distance does not meet the specifications:
  – Adjust the basic position of the gear shift lever. (p. 72)

8.9 Adjusting the basic position of the gear shift lever

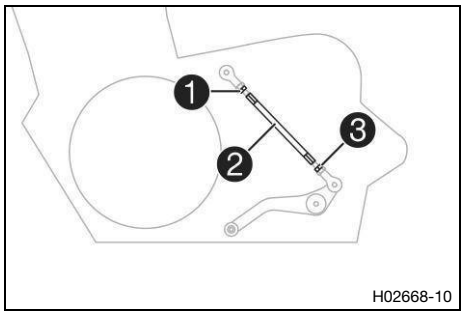

– Loosen nut ❶ while holding stud ❷.
– Loosen nut ❸ while holding stud ❷.

Note
Nut ❸ has an LH thread.

– Turn stud ❷ to adjust the shift lever.

The gear shift lever must not come into contact with any other vehicle components during the shift procedure.

Note
The range of adjustment is limited.

– Tighten nut ❸ while holding stud ❷.

Nut, shift rod	
M6LH	6 Nm (4.4 ft·lb_f)

– Tighten nut ❶ while holding stud ❷.

Nut, shift rod	
M6	6 Nm (4.4 ft·lb_f)

9.1 Notes on preparing for first use

DANGER
Danger of accidents A rider who is not fit to ride poses a danger to themself and to others.
– Do not operate the vehicle if you are not fit to ride due to alcohol, drugs, or medication.
– Do not operate the vehicle if you are physically or mentally incapable of doing so.

WARNING
Danger of accidents The brake system fails in the event of overheating.
If the brake pedal is not released, the brake pads grind continuously.
– Take your foot off the brake pedal when you are not braking.

WARNING
Danger of accidents Non-approved or non-recommended tyres and wheels impact the handling characteristic.
– Only use tires and wheels approved and recommended by the vehicle manufacturer with the corresponding speed rating.

WARNING
Danger of accidents New tires have reduced road grip.
The contact surface on new tires is not yet roughened.
– Run in new tires with moderate riding and only gradually increase the lean angle.

Run-in distance	200 km (124.3 mi)

WARNING
Danger of accidents Different tire profiles on the front and rear wheels can make it more difficult to control the vehicle.
– Make sure that only tires of the same tread type are mounted to the front and rear wheel.

WARNING
Risk of injury Missing or inadequate protective clothing increases the risk of injury.
– Wear appropriate protective clothing such as helmet, boots, gloves as well as pants and a jacket with protectors on all rides.
– Always wear protective clothing that is in good condition and meets the legal regulations.

Note
When using the vehicle, remember that others may feel disturbed by excessive noise.

– Ensure that the pre-delivery inspection has been carried out by an authorized contractual partner.
  ✓ The delivery certificate is transferred upon vehicle handover.
– Read the entire owner's manual before riding for the first time.
– Get to know the controls.
– Adjust the basic position of the clutch lever. (p. 69)
– Adjust the basic position of the hand brake lever. (p. 70)
– Adjust the basic position of the brake pedal. (p. 71)
– Get used to the handling characteristics of the motorcycle on suitable terrain before undertaking a more challenging ride.
– Also, ride as slowly as possible and in a standing position to get a better feel for the motorcycle.
– Hold the handlebar firmly with both hands and keep your feet on the footpegs when riding.

– Run in the engine. (p. 75)

9.2 Running in the engine

– During the running-in phase, do not exceed the specified engine speed.

Maximum engine speed	
During the first: 1,000 km (621.4 mi)	6,500 rpm (108.33 Hz)
After the first: 1,000 km (621.4 mi)	9,800 rpm (163.33 Hz)

Avoid fully opening the throttle.

Note
If the maximum engine speed is exceeded before the first service, the shift warning light flashes.

9.3 Loading the vehicle

WARNING
Fire hazard The hot exhaust system may burn luggage.
– Fasten your luggage in such a way that it cannot be burned or singed by the hot exhaust system.

WARNING
Danger of accidents A high payload alters the handling characteristic and increases the stopping distance.
– Adapt your speed to your payload.

WARNING
Danger of accidents Carrying luggage alters handling characteristics.
– Adapt your speed to your payload.
– Ride more slowly if your vehicle is loaded with cases or other luggage.

Maximum speed with luggage	150 km/h (93.2 mph)

WARNING
Danger of accidents Items of luggage that have slipped or are incorrectly fastened can obscure the lighting system.
– Check that your luggage is fixed properly at regular intervals.
– Make sure that the lighting system is not covered by luggage.

WARNING
Danger of accidents Total weight and axle loads influence the handling characteristic.
The total weight consists of: operational vehicle with a full tank, rider and, if applicable, a passenger with protective clothing and helmet, and, if applicable, mounted luggage.
– Do not exceed the maximum permissible total weight or the axle loads.

WARNING

Danger of accidents Improper mounting of cases, tank rucksacks or other luggage impairs the handling characteristics.

Luggage mounted incorrectly can slip while the vehicle is in motion.

– Mount and secure all luggage according to the manufacturer's instructions.
– Check that your luggage is fixed properly at regular intervals.

WARNING

Danger of accidents The luggage system will be damaged if it is overloaded.

– Read the manufacturer information on maximum payload when mounting cases.

– If luggage is carried, ensure it is fixed firmly as close as possible to the center of the vehicle and ensure even weight distribution between the front and rear wheels.

The maximum permissible total weight and the maximum permissible axle loads must not be exceeded.	
Maximum permissible total weight	450 kg (992.1 lb)
Maximum permissible front axle load	175 kg (385.8 lb)
Maximum permissible rear axle load	275 kg (606.3 lb)

10.1 checks and maintenance measures when preparing for use

Note
Before every trip, check the condition of the vehicle and ensure that it is roadworthy.
The vehicle must be in perfect technical condition when it is being operated.

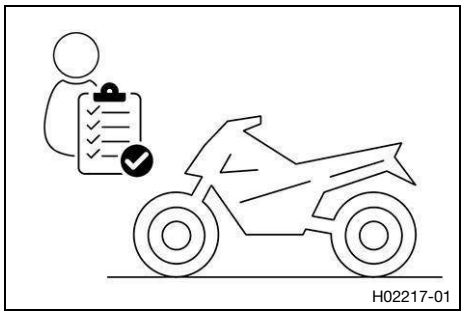

- Check the engine oil level. (p. 162)
- Check the brake fluid level for the front brake. (p. 128)
- Check the brake fluid level for the rear brake. (p. 131)
- Check that the brake pads of the front brake are secured. (p. 130)
- Check that the brake pads of the rear brake are secured. (p. 132)
- Check that the brake system is functioning properly.
- Check the coolant level in the compensating tank. (p. 157)
- Check the chain for dirt. (p. 100)
- Check the chain tension. (p. 101)
- Check the tire condition. (p. 140)
- Check the tire pressure. (p. 142)
- Check the settings of all controls and ensure that they can be operated smoothly.
- Check that the electrical equipment is functioning properly.
- Check that luggage is properly secured.
- Sit on the motorcycle and check the rear mirror setting.
- Check the fuel level.
- In dusty operating conditions: Check the air filter box and air filter.

10.2 Starting the vehicle

DANGER
Danger of poisoning Exhaust gases are toxic and inhaling them may result in unconsciousness and death.
- Always ensure that there is sufficient ventilation when running the engine.
- Use suitable exhaust extraction when starting or running the engine in an enclosed space.

WARNING
Danger of accidents Electronic components and safety devices will be damaged if the 12-V battery is discharged or missing.
If the 12-V battery is discharged or defective, malfunctions in the vehicle electronics can occur, especially when starting.
- Never operate the vehicle with a discharged 12-V battery or without a 12-V battery.

NOTE
Engine failure Running a cold engine at high engine speeds negatively impacts the service life of the engine.
- Always warm up the engine at low engine speeds.

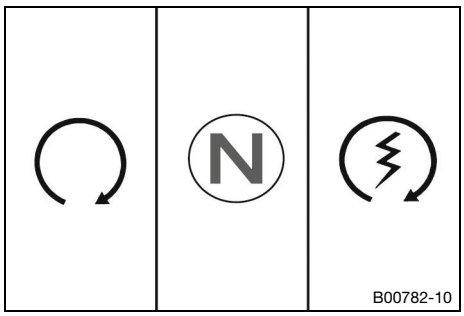

– Take the motorcycle off the stand and sit on the motorcycle.
– Make sure that the start button/kill switch is in the middle position ◯.
– Switch on the ignition by turning the ignition key to position ◯.

To avoid malfunctions in the control unit communication, do not switch the ignition off and on in rapid succession.

✓ After you switch on the ignition, you can hear the fuel pump working for about two seconds. The function check of the combination instrument is run at the same time.
✓ The ABS warning light lights up and goes out again after starting off.

– Shift the transmission into neutral N.
✓ The green idle indicator lamp **N** lights up.
– Briefly press the start button/kill switch into lower position ⚡.

Only press the start button/emergency OFF switch into the lower position ⚡ when the combination instrument function check has been completed.
Do not open the throttle to start.
If the starting attempt is unsuccessful, wait for 15 seconds before making another attempt at starting.
After 6 unsuccessful starting attempts, do not try again, and check the vehicle for other malfunctions instead.

Note
This motorcycle is equipped with a safety starting system. You can only start the engine if the transmission is in neutral or if the clutch lever is pulled when a gear is engaged. If the side stand is folded out and you shift into gear and release the clutch lever, the engine stops.

10.3 Starting off

– Pull the clutch lever, shift into first gear, release the clutch lever slowly and at the same time carefully open the throttle.

10.4 Easy Shift

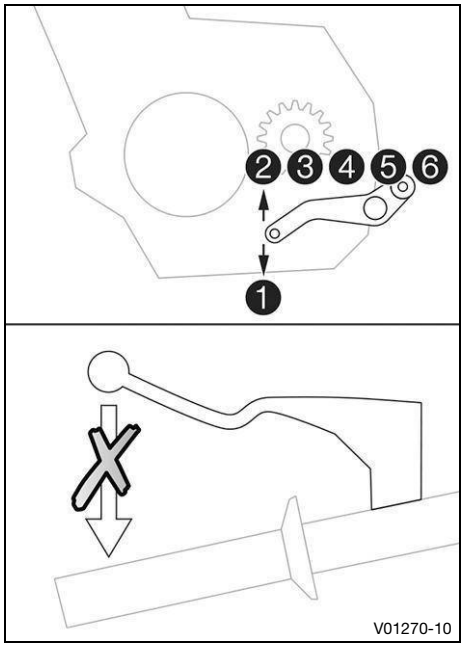

If **Easy Shift** is activated, you can shift up and down without operating the clutch.

Because there is no need to close the throttle grip, uninterrupted gear shifts are possible.

Easy Shift uses the shifter shaft position to check whether or not a shift should be initiated, and sends a corresponding signal to the engine control unit.

If Easy Shift is disabled in the combination instrument, the clutch needs to be operated in the normal way for each shift.

10.5 Shifting, riding.

WARNING

Risk of injury The passenger may fall from the vehicle if they act incorrectly.

– Ensure that the passenger sits correctly on the passenger seat, places his or her feet on the passenger foot pegs and holds on to the rider or the grab handles.

WARNING

Danger of accidents Not adapting the riding style constitutes a major risk.

– Comply with traffic regulations and ride defensively and with foresight to detect sources of danger as early as possible.

WARNING

Danger of accidents Total weight and axle loads influence the handling characteristic.

The total weight consists of: operational vehicle with a full tank, rider and, if applicable, a passenger with protective clothing and helmet, and, if applicable, mounted luggage.

– Do not exceed the maximum permissible total weight or the axle loads.

WARNING

Danger of accidents Improper mounting of cases, tank rucksacks or other luggage impairs the handling characteristics.

Luggage mounted incorrectly can slip while the vehicle is in motion.

– Mount and secure all luggage according to the manufacturer's instructions.
– Check that your luggage is fixed properly at regular intervals.

WARNING

Danger of accidents Adjustments to the vehicle distract attention from traffic activity.

– Make all adjustments when the vehicle is at a standstill.

WARNING
Danger of accidents Abrupt load alterations can cause the vehicle to become out of control.
– Avoid abrupt load alterations and sudden braking actions unless a hazardous situation arises.

WARNING
Danger of accidents Cold tires have reduced road grip.
– Ride the first miles carefully on every journey at moderate speed until the tires reach operating temperature.

WARNING
Danger of accidents New tires have reduced road grip.
The contact surface on new tires is not yet roughened.
– Run in new tires with moderate riding and only gradually increase the lean angle.

Run-in distance	200 km (124.3 mi)

WARNING
Danger of accidents A fall can damage the vehicle more seriously than it may first appear.
– Check the vehicle after a fall as you do when preparing for use.

WARNING
Danger of accidents An incorrect ignition key position causes malfunctions.
– Do not change the ignition key position while riding.

WARNING
Danger of accidents If you downshift at high engine speed, the rear wheel blocks and the engine races.
– Do not downshift to a lower gear at high engine speeds.

NOTE
Transmission damage Incorrect use of Easy Shift will damage the transmission.
Easy Shift can only be used if the function is activated in the combination instrument.
Easy Shift is not active if you pull the clutch lever.
– Only use Easy Shift in the permitted speed range shown.

NOTE
Engine failure Overheating damages the engine.
– If the coolant temperature warning is displayed, stop immediately and take care not to endanger yourself or other traffic participants in the process.
– Allow the engine and cooling system to cool down.
– Check and, if necessary, correct the coolant level on the cooling system while it is in a cooled state.

NOTE
Engine failure Unfiltered intake air has a negative effect on the service life of the engine.
Dust and dirt can enter the engine if there is no air filter or if the air filter is mounted incorrectly.
– Only operate the vehicle if an air filter is correctly fitted.

Note
If you hear unusual noises while riding, stop immediately, switch off the engine, and contact an authorized contractual partner.

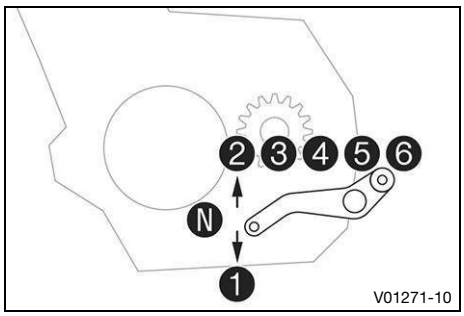

– Shift into a higher gear when conditions allow (incline, road situation, etc.).
– Release the throttle while simultaneously pulling the clutch lever, shift into the next gear, release the clutch lever, and open the throttle.

Note
The gear positions can be seen in the figure. The neutral or idle position is between the first and second gears. First gear is used for starting off or for steep inclines.
The operating temperature is reached when 5 bars of the temperature indicator light up.

– After reaching maximum speed by fully opening the throttle twist grip, turn the throttle back so that it is ¾ open. This will reduce the speed slightly, but the fuel consumption will be considerably lower.
– Accelerate only up to a speed suitable for the road surface and weather conditions. In particular, you should not change gear on bends and should only accelerate very cautiously.
– Brake if necessary and close the throttle at the same time in order to shift down.
– Pull clutch lever and shift into a lower gear, release the clutch lever slowly, and open the throttle or shift again.
– If the engine stalls (e.g., at a crossroads), just pull clutch lever and press the start button/emergency OFF switch into the lower position. The transmission must not be shifted into neutral.
– Switch off the engine if you are likely to be running at idle speed or stationary for a long time.
– If the oil pressure warning lamp lights up during a trip, stop immediately and switch off the engine. Contact an authorized contractual partner.
– If malfunction indicator lamp lights up during a trip, please contact an authorized contractual partner as soon as possible.
– If the general warning lamp lights up during a trip, the display shows a message.

Note
Very important messages are stored in the **Warning** menu.

– If the ice warning appears in the combination instrument, the roads may be icy. Adjust your speed to the road conditions.

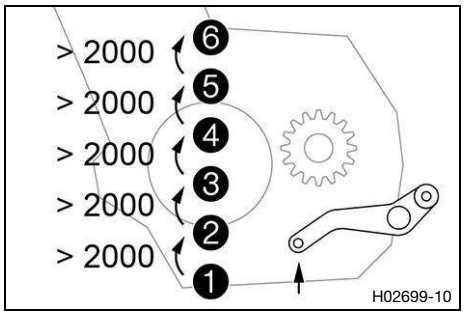

– If **Easy Shift** (optional) is activated on the dashboard, you can shift up in the rev range shown without pulling the clutch lever.

Pull the shift lever to the stop quickly without changing the throttle twist grip position.

Note
The minimum engine speed in rpm before shifting up is shown in the figure.

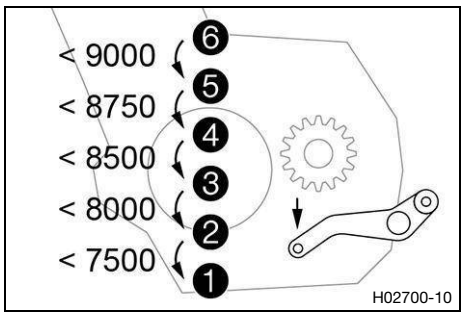

– If **Easy Shift** (optional) is activated on the dashboard, you can shift down in the rev range shown without pulling the clutch lever.

Press the shift lever to the stop quickly without changing the throttle twist grip position.

Note
The maximum engine speed in rpm before shifting down is shown in the figure.

10.6 ETTC

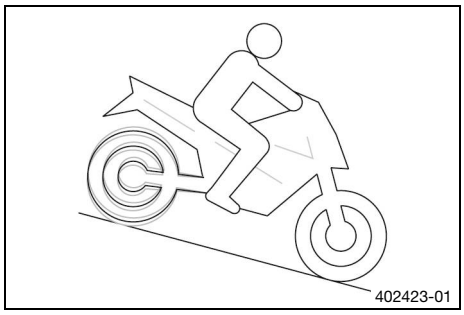

The **MSR** is a function of the engine control.

If the engine braking effect is too great, the **MSR** prevents the rear wheel from locking or sliding away on a sloping position.

To avoid slip of the rear wheel, the **MSR** only opens the throttle valve as far as absolutely necessary.

The **MSR** is applied on surfaces, where the friction coefficient is to low to open the slipper clutch.

To further increase ride safety, the **MSR** is slope dependent.

Note
When ABS mode **Offroad** is active, the **MSR** is not active.

10.7 Braking

WARNING
Danger of accidents A spongy pressure point on the front or rear brake reduces the brake action.
– Do not drive the vehicle if the brake system has a spongy pressure point.

WARNING
Danger of accidents The brake system fails in the event of overheating.
If the brake pedal is not released, the brake pads grind continuously.
– Take your foot off the brake pedal when you are not braking.

WARNING
Danger of accidents Braking with excessive force locks the wheels.
The ABS effectiveness is only ensured if it is switched on.
– Leave the ABS switched on in order to benefit from the protective effect.

WARNING
Danger of accidents Moisture and dirt impair the brake system.
– Brake carefully several times to dry out and remove dirt from the brake pads and the brake discs.

WARNING
Danger of accidents The rear wheel can lock due to the engine braking effect.
– Pull the clutch when performing emergency braking or braking on slippery surfaces.

WARNING
Danger of accidents Salt on the roads impairs the brake system.
– Brake carefully several times to remove salt from the brake linings and the brake discs.

WARNING
Danger of accidents ABS may increase the stopping distance in certain situations.
– Adapt your braking to the riding situation and the road conditions.

WARNING
Danger of accidents Higher total weight increases the stopping distance.
– Take the longer stopping distance into account when carrying a passenger or luggage with you.

WARNING
Danger of accidents Driving aids can reduce the probability of a fall only within physical limits.
It is not always possible to compensate for certain riding situations, for example with luggage loaded with a high center of gravity, varying road surfaces, steep descents or full braking without disengaging the gear.
– Adapt your riding style to the road conditions and your driving ability.

– When braking, release the throttle and apply the front and rear brakes at the same time.

Note
When the **ABS** is enabled, maximum braking power can be applied even on surfaces with low road grip such as sandy, wet, or slippery terrain without the danger of the wheels locking.

WARNING
Danger of accidents Banked or laterally sloping ground reduces the maximum possible delay.
– If possible finish braking before going into a bend.

– Always finish braking before you go into a bend. Shift into a lower gear that suits the speed.
– Use the brake action of the engine on long downhill stretches. To do so, shift back one or two gears, but do not overrev the engine. This means that significantly less braking is required and means the brake system does not overheat.

10.8 Stop, park

WARNING
Risk of injury People who act without authorization endanger themselves and others.
– Never leave the vehicle unattended while the engine is running.
– Lock the steering and remove the ignition key if you leave the vehicle unattended.

WARNING
Danger of burns Some vehicle components become hot when the vehicle is operated.
– Do not touch any parts such as the exhaust system, radiator, engine, damper, or brake system before the vehicle parts have cooled down.
– Allow the vehicle parts to cool down before performing any work on the vehicle.

NOTE
Fire hazard Hot vehicle components pose a fire hazard and explosion risk.
– Do not park the vehicle near materials which are highly flammable or explosive.
– Allow the vehicle to cool down before covering it.

NOTE

Material damage The vehicle may be damaged if parked incorrectly.

Damage can occur if the vehicle rolls away or falls over.

The components for parking the vehicle are designed only for the weight of the vehicle.

– Park the vehicle on a firm and level surface.
– Make sure that nobody sits on the vehicle when it is parked on a stand.

– Brake the motorcycle.
– Shift the transmission into neutral N.
– Switch off the ignition by turning the ignition key to position ⊗.

Note

If the engine is switched off with the emergency OFF switch and the ignition remains switched on at the ignition lock, power continues to flow to most electrical power consumers. This discharges the 12-V battery. You should therefore always switch off the engine with the ignition lock – the kill switch is intended for emergencies only.

– Park the motorcycle on a firm surface.
– Swing side stand forward with your foot as far as it will go and lean the vehicle on it.

(Norden 901 Expedition)

– Raise the vehicle with the center stand. (p. 98)

– Lock the steering by turning the handlebar fully to the left, pressing down the ignition key to position ⊗ and turning it to position 🔒. To make the steering lock engage more easily, move the handlebar a little to the left and right. Remove the ignition key.

10.9 Transportation

NOTE

Fire hazard Hot vehicle components pose a fire hazard and explosion risk.

– Do not park the vehicle near materials which are highly flammable or explosive.
– Allow the vehicle to cool down before covering it.

NOTE

Material damage The vehicle may be damaged if parked incorrectly.

Damage can occur if the vehicle rolls away or falls over.

The components for parking the vehicle are designed only for the weight of the vehicle.

– Park the vehicle on a firm and level surface.
– Make sure that nobody sits on the vehicle when it is parked on a stand.

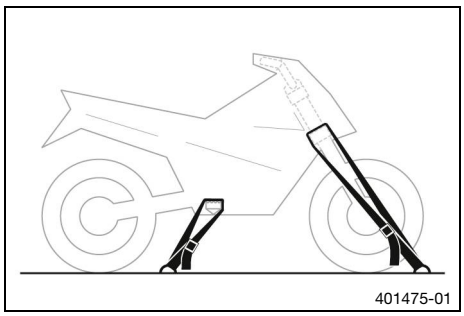

– Switch off the engine.
– Use tension belts or other suitable devices to secure the motorcycle against falling over or rolling away.

10.10 Towing in the event of a breakdown

NOTE

Danger of damage Damage to the powertrain and transmission can occur when towing with a towing vehicle.

- Do not use towing equipment where the wheels of the broken down vehicle remain on the road and rotate as it is towed.
- Always transport a broken down vehicle on a trailer or on the loading area of a transport vehicle.

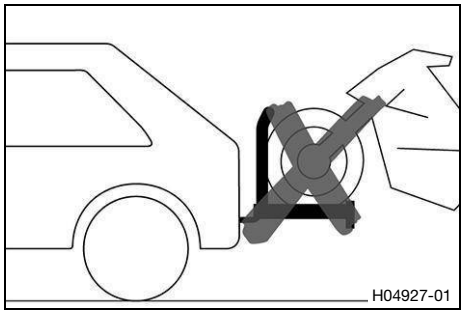

- Ensure that the broken down vehicle is properly secured on the trailer or transport vehicle.
- Observe local regulations for the recovery of broken down vehicles.

10.11 Refueling

DANGER

Fire hazard Fuel is highly flammable.

The fuel in the fuel tank expands when warm and can escape if overfilled.

- Do not refuel the vehicle in the vicinity of open flames, glowing, or smoldering objects.
- Make sure that nobody smokes in the vicinity of the vehicle during the refueling process.
- Switch off the engine for refueling.
- Make sure that no fuel is spilled; particularly not on hot parts of the vehicle.
- If any fuel is spilled, wipe it up immediately.
- Do not overfill the fuel tank.

WARNING

Danger of poisoning Fuel is harmful to health.

- Do not allow fuel to come into contact with skin, eyes, or clothing.
- Consult a doctor immediately if fuel has been ingested.
- Do not inhale fuel vapors.
- Rinse the affected area immediately with plenty of water in the event of contact with skin.
- Rinse eyes thoroughly with water and consult a doctor immediately if fuel comes into contact with eyes.
- If fuel spills on to your clothing, change the clothing.
- Store fuel properly in a suitable container and keep out of the reach of children.

NOTE

Material damage Inadequate fuel quality can lead to losses in performance and consequential damage.

- Refuel only with clean fuel that meets the specified standards.

NOTE

Environmental hazard Improper handling of fuel is dangerous to the environment.

- Do not allow fuel to enter the groundwater, the soil, or the sewage system.

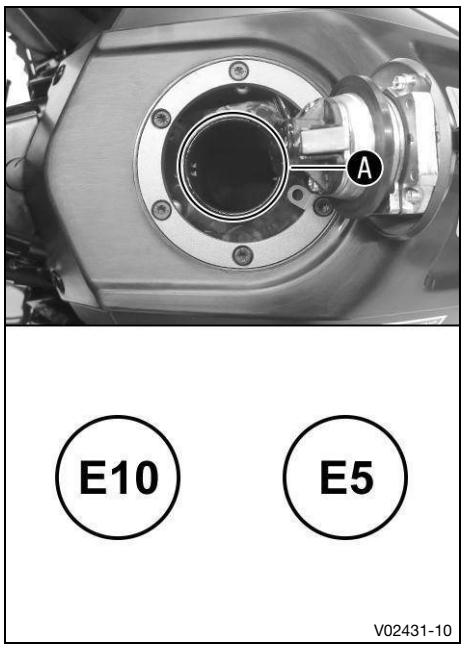

– Switch off the engine.
– Open the fuel tank cap. (p. 27)
– Fill the fuel tank with fuel up to the lower edge A of the filler neck.

Total fuel tank capacity, approx.	
Super unleaded (ROZ 95) (p. 198)	19 l (5.0 liq. gal_{US})

– Close the fuel tank cap. (p. 28)

11.1 Service work

Any further work that results from the service work must be ordered separately and invoiced separately.
Different service intervals may apply in your country, depending on the local operating conditions.
Individual service intervals and scopes may change in the course of technical developments. The most up-to-date service schedule is available for authorized contractual partners for the electronic proof of service. Your authorized contractual partner will be happy to advise you.
* In dusty operating conditions: Check the air filter regularly and replace if necessary.

	After 1,000 km (621.4 mi)	Every 15,000 km (9,320.6 mi)	Every 30,000 km (18,641.1 mi)	Every 12 months	Every 24 months	Every 48 months
Read out the fault memory using the diagnostics tool.	○	●	●	●	●	●
Program the shift shaft sensor.	○	●	●	●	●	●
Check that the electrical equipment is functioning properly.	○	●	●	●	●	●
Check that the brake pads of the front brake are secured. (p. 130)	○	●	●	●	●	●
Check that the brake pads of the rear brake are secured. (p. 132)	○	●	●	●	●	●
Check the brake discs. (p. 127)	○	●	●	●	●	●
Check the brake lines for damage and tightness.	○	●	●	●	●	●
Check the brake fluid level for the front brake. (p. 128)	○	●	●	●		
Change the brake fluid for the front brake.					●	●
Check the brake fluid level for the rear brake. (p. 131)	○	●	●	●		
Change the brake fluid for the rear brake.					●	●
Check the free travel of the clutch lever. (p. 165)	○	●	●	●	●	●
Check the free travel of the brake pedal. (p. 130)	○	●	●	●	●	●
Change the engine oil and the oil filter, clean the oil screens. (p. 162)	○	●	●	●	●	●
Check all hoses (e.g. fuel, cooling, bleeder, drainage, etc.) and boots for cracking, leaks, and correct routing.		●	●	●	●	●
Empty the drainage hoses.	○	●	●	●	●	●
Check the cables for damage and that there are no kinks in the routing.		●	●	●	●	●
Check the frame.			●			
Check the swingarm.			●			
Check the swingarm bearing for play.		●	●			
Check the steering head bearing play.	○	●	●			
Check the wheel bearing for play.		●	●			
Check the shock absorber and fork for leaks. Perform a fork service and shock absorber service as needed, when possible and depending on how the vehicle is used.	○	●	●	●	●	●
Check the tire condition. (p. 140)	○	●	●	●	●	●
Check the tire pressure. (p. 142)	○	●	●	●	●	●
Check the rim run-out.	○	●	●	●	●	●

	After 1,000 km (621.4 mi)	Every 15,000 km (9,320.6 mi)	Every 30,000 km (18,641.1 mi)	Every 12 months	Every 24 months	Every 48 months
Retighten the spokes.	○					
Check the spoke tension. (p. 142)		●	●	●	●	●
Check the chain, rear sprocket, engine sprocket, and chain guide. (p. 103)		●	●	●	●	●
Check the chain tension. (p. 101)	○	●	●	●	●	●
Grease all moving parts (e.g. side stand, hand lever, chain, etc.) and check for smooth operation.	○	●	●	●	●	●
Change the spark plugs.			●			
Check the valve clearance.			●			
Change the air filter, clean the air filter box. *		●	●			
Check the fuel pressure.		●	●	●	●	●
Check the headlight adjustment. (p. 153)	○	●	●			
Check the tightness of the safety-relevant screws and nuts which are easily accessible.	○	●	●	●	●	●
Clean the dust boots of the fork legs. (p. 119)		●	●			
Check the frost protection and coolant level.	○	●	●	●	●	
Change the coolant.						●
Check that the radiator fan is functioning properly.	○	●	●	●	●	●
Final check: Check the vehicle is roadworthy and take a test ride.	○	●	●	●	●	●
Read out the fault memory after the test ride using the diagnostics tool.	○	●	●	●	●	●
Set the service display using the diagnostic tool.	○	●	●	●	●	●
Enter the electronic proof of service in the contractual partner portal.	○	●	●	●	●	●

○ One-time interval

● Periodic interval

12.1 Fork/shock absorber

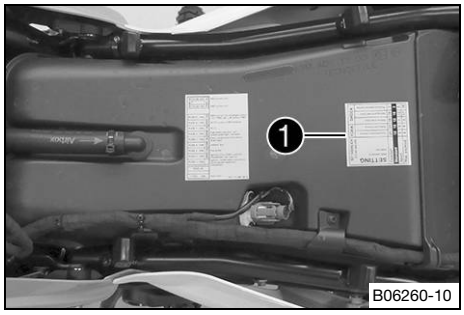

The fork and the shock absorber offer many options of adapting the chassis to the riding style and payload.

Note
The recommendations for the suspension setting are shown in table ❶. The table is located under the front rider's seat on the air filter box.

These adjustments are guidelines and should always be the basis for a suspension setting. If the guidelines are not adhered to, the riding characteristics could deteriorate, particularly at high speeds.

12.2 Adjusting the compression damping of the fork

Note
The hydraulic compression damping determines the fork suspension behavior.

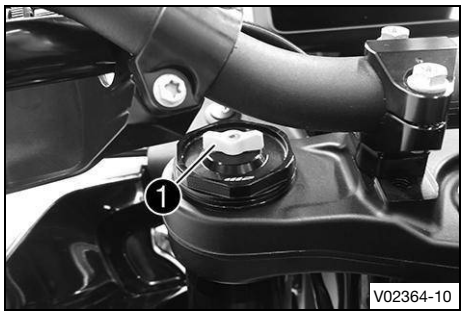

(Norden 901)

– Turn white adjuster ❶ clockwise as far as it will go.

Note
Adjuster ❶ COMP is located at the upper end of the left fork leg.

– Turn clockwise by the number of clicks corresponding to the fork type.

Compression damping	
Comfort	21 clicks
Standard	15 clicks
Sport	9 clicks
Full payload	9 clicks

Note
Turning clockwise increases damping; turning counterclockwise reduces damping during compression.

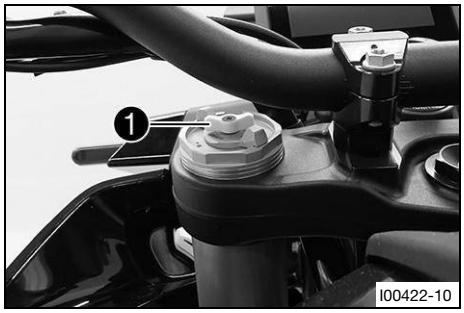

(Norden 901 Expedition)

– Turn white adjuster ❶ clockwise as far as it will go.

Note
Adjuster ❶ COMP is located at the upper end of the left fork leg.

– Turn clockwise by the number of clicks corresponding to the fork type.

Compression damping	
Comfort	20 clicks
Standard	15 clicks
Sport	10 clicks
Full payload	15 clicks

Note
Turning clockwise increases damping; turning counterclockwise reduces damping during compression.

12.3 Adjusting the rebound damping of the fork

Note
The hydraulic rebound damping determines the fork suspension behavior.

(Norden 901)

– Turn red adjuster ❶ clockwise as far as it will go.

Note
Adjuster ❶ **REB** is located at the upper end of the right fork leg.

– Turn clockwise by the number of clicks corresponding to the fork type.

Rebound damping	
Comfort	21 clicks
Standard	15 clicks
Sport	9 clicks
Full payload	9 clicks

Note
Turning clockwise increases damping; turning anticlockwise reduces damping on rebound.

(Norden 901 Expedition)

– Turn red adjuster ❶ clockwise as far as it will go.

Note
Adjuster ❶ **REB** is located at the upper end of the right fork leg.

– Turn clockwise by the number of clicks corresponding to the fork type.

Rebound damping	
Comfort	18 clicks
Standard	15 clicks
Sport	10 clicks
Full payload	15 clicks

Note
Turning clockwise increases damping; turning anticlockwise reduces damping on rebound.

12.4 Adjusting the spring preload of the fork (Norden 901 Expedition)

Preparatory work
(Norden 901 Expedition)

– Raise the vehicle with the center stand. (p. 98)

Main work

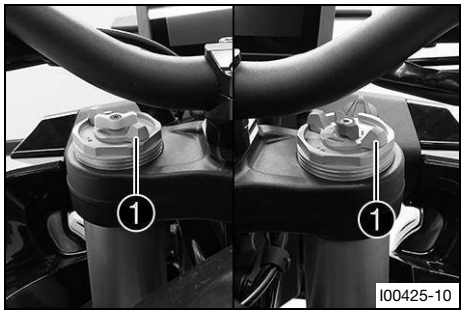

– Turn T-grips ❶ counterclockwise all the way.

Make the adjustment by hand only. Do not use a tool.
Make the same adjustment on both fork legs.

✓ Marking **+0** aligns with the right-hand part of the grip.

– Turn the T-grips clockwise.

Spring preload - **Preload Adjuster (Norden 901 Expedition)**	
Comfort	**+0**
Standard	**+0**
Sport	**+0**
Full payload	**+3**

Adjust the spring preload to the numerical values only as the preload will not engage between the numerical values.

✓ The T-grips engage noticeably at the numerical values.

Note
Turn clockwise to increase the spring preload; turn counterclockwise to reduce the spring preload.
Adjusting the spring preload has no influence on the absorption setting of the rebound.
Basically, however, you should set the rebound damping higher with a higher spring preload.

Reworking
(Norden 901 Expedition)

– Remove the vehicle from the center stand. (p. 98)

12.5 Compression damping of the shock absorber (Norden 901 Expedition)

The compression damping of the shock absorber is divided into two ranges: high-speed and low-speed.

High-speed and low-speed refer to the compression speed of the rear wheel suspension and not to the vehicle speed.

The high-speed compression adjuster, for example, has an effect when riding over an asphalt edge: the rear wheel suspension compresses quickly.

The low-speed compression has an effect, for example, when riding over long bumps: the rear wheel suspension compresses slowly.

These two ranges can be adjusted separately, although the transition between high-speed and low-speed is gradual. As a result, changes in the high-speed range affect the compression damping in the low-speed range and vice versa.

12.6 Adjusting the low-speed compression damping of the shock absorber (Norden 901 Expedition)

CAUTION

Risk of injury Parts of the shock absorber will move erratically if the shock absorber is detached incorrectly.

The shock absorber is filled with highly compressed nitrogen.

– Please follow the description provided.

Note

The effect of the low-speed compression adjustment can be seen in slow to normal compression of the shock absorber.

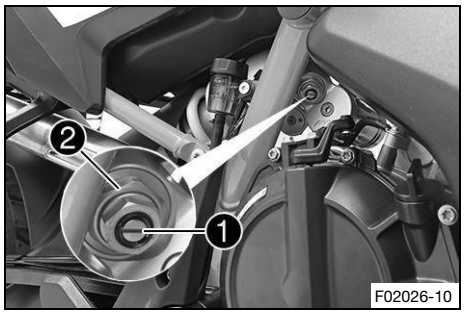

– Turn adjusting screw ❶ clockwise with a screwdriver as far as the last perceptible click.

Do not loosen fitting ❷!

– Turn counterclockwise by the number of clicks corresponding to the shock absorber type.

Low-speed compression damping	
Comfort	20 clicks
Standard	15 clicks
Sport	10 clicks
Full payload	7 clicks

Note

Turning clockwise increases damping; turning anti-clockwise reduces damping.

12.7 Adjusting the high-speed compression damping of the shock absorber (Norden 901 Expedition)

CAUTION
Risk of injury Parts of the shock absorber will move erratically if the shock absorber is detached incorrectly.
The shock absorber is filled with highly compressed nitrogen.
– Please follow the description provided.

Note
The effect of the high-speed compression adjustment can be seen in the fast compression of the shock absorber.

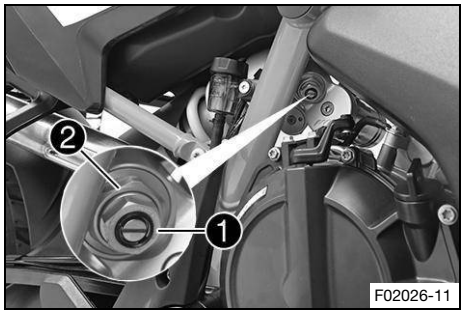

– Turn adjusting screw ❶ all the way clockwise with a socket wrench.

Do not loosen fitting ❷!

– Turn counterclockwise by the number of turns corresponding to the shock absorber type.

High-speed compression damping	
Comfort	2 turns (720°)
Standard	1.5 turns (540°)
Sport	1 turn (360°)
Full payload	0.5 turns (180°)

Note
Turning clockwise increases damping; turning anti-clockwise reduces damping.

12.8 Adjusting the rebound damping of the shock absorber

CAUTION
Risk of injury Parts of the shock absorber will move erratically if the shock absorber is detached incorrectly.
The shock absorber is filled with highly compressed nitrogen.
– Please follow the description provided.

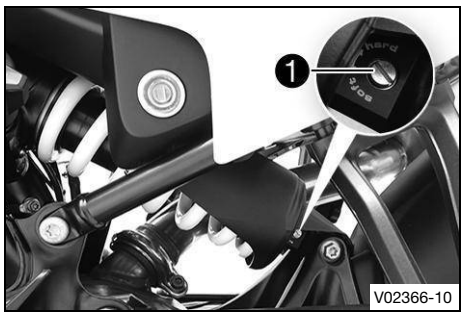

– Turn adjusting screw ❶ clockwise up to the last perceptible click.
– Turn counterclockwise by the number of clicks corresponding to the shock absorber type.

(Norden 901)

Rebound damping	
Comfort	18 clicks
Standard	12 clicks
Sport	7 clicks
Full payload	5 clicks

(Norden 901 Expedition)

Rebound damping	
Comfort	20 clicks
Standard	12 clicks
Sport	5 clicks
Full payload	5 clicks

Note
Turning clockwise increases damping; turning anti-clockwise reduces damping on rebound.

12.9 Adjusting the spring preload of the shock absorber

WARNING
Danger of accidents Modifications to the suspension settings that are not properly coordinated can impair the handling and overload components.
– Only make adjustments within the recommended range.
– Ride slowly to start with after making adjustments to get the feel of the new handling characteristics.

Note
The spring preload defines the initial status of the spring operation on the shock absorber.
The best spring preload setting is achieved when it is set for the weight of the rider and that of any luggage and a passenger, thus ensuring an ideal compromise between handling and stability.

Condition: The swingarm is relieved of weight

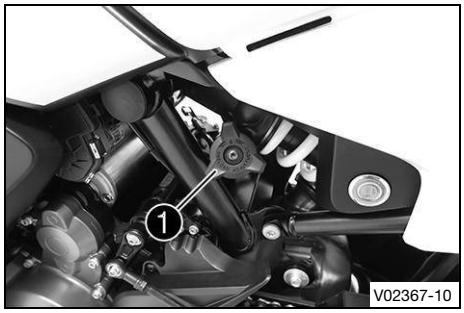

(Norden 901)

– Turn handwheel ❶ counterclockwise as far as it will go.
– Turn it clockwise by the number of turns corresponding to the shock absorber type and use.

Spring preload – preload adjuster	
Comfort	3 turns (1,080°)
Standard	3 turns (1,080°)
Sport	5 turns (1,800°)
Full payload	10 turns (3,600°)

Note
Turn clockwise to increase the spring preload; turn counterclockwise to reduce the spring preload.

(Norden 901 Expedition)

– Turn adjusting screw ❶ counterclockwise all the way.
– Turn it clockwise by the number of turns corresponding to the shock absorber type and use.

Spring preload - **Preload Adjuster**	
Comfort	4 turns (1,440°)
Standard	4 turns (1,440°)
Sport	4 turns (1,440°)
Full payload	10 turns (3,600°)

Note
Turn clockwise to increase the spring preload; turn counterclockwise to reduce the spring preload.

13.1 Raising the motorcycle with rear lifting gear

NOTE

Material damage The vehicle may be damaged if parked incorrectly.

Damage can occur if the vehicle rolls away or falls over.

The components for parking the vehicle are designed only for the weight of the vehicle.

– Park the vehicle on a firm and level surface.
– Make sure that nobody sits on the vehicle when it is parked on a stand.

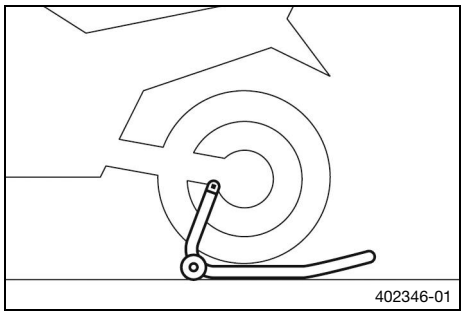

– Mount retaining adapter on the link fork.
– Insert the adapter in the rear lifting gear.

Retaining adapter (61029955144)
Rear wheel work stand (6932995500033)

– Stand motorcycle upright, align lifting gear to the link fork with the adapters, and raise motorcycle.

13.2 Removing the rear of the motorcycle from the lifting gear

NOTE

Material damage The vehicle may be damaged if parked incorrectly.

Damage can occur if the vehicle rolls away or falls over.

The components for parking the vehicle are designed only for the weight of the vehicle.

– Park the vehicle on a firm and level surface.
– Make sure that nobody sits on the vehicle when it is parked on a stand.

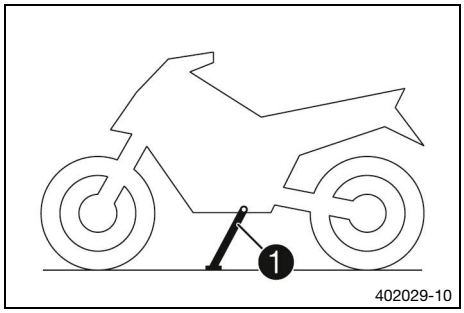

– Secure the motorcycle against falling over.
– Remove the rear lifting gear and lean the vehicle on side stand ❶.
– Remove the retaining adapter from the link fork.

13.3 Lifting the motorcycle with the front lifting gear

NOTE

Material damage The vehicle may be damaged if parked incorrectly.

Damage can occur if the vehicle rolls away or falls over.

The components for parking the vehicle are designed only for the weight of the vehicle.

– Park the vehicle on a firm and level surface.
– Make sure that nobody sits on the vehicle when it is parked on a stand.

Preparatory work

– Raise the motorcycle with the rear lifting gear. (p. 96)

Main work

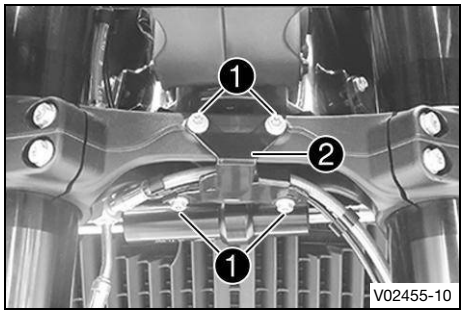

– Remove ❶ screws.
– Take off retaining bracket ❷.

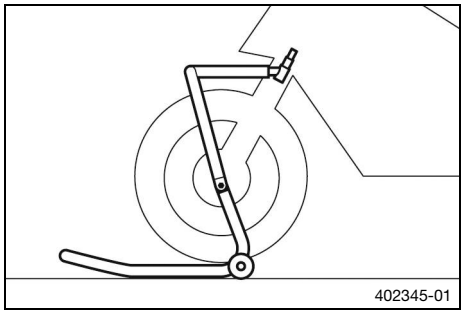

– Move the handlebar to the straight-ahead position.
– Use suitable lifting gear when attaching the steering stem.
– Align the front lifting gear with the fork legs.

Always raise the motorcycle at the rear first.

– Lift the motorcycle at the front.

13.4 Taking the motorcycle off the front lifting gear

NOTE

Material damage The vehicle may be damaged if parked incorrectly.
Damage can occur if the vehicle rolls away or falls over.
The components for parking the vehicle are designed only for the weight of the vehicle.
– Park the vehicle on a firm and level surface.
– Make sure that nobody sits on the vehicle when it is parked on a stand.

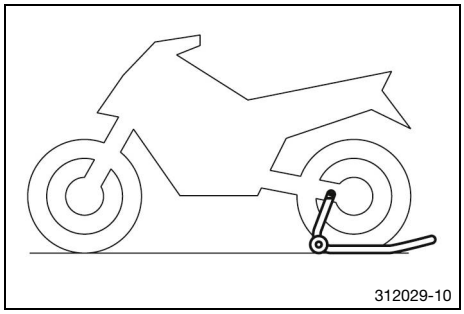

– Secure the motorcycle against falling over.
– Remove the front lifting gear.

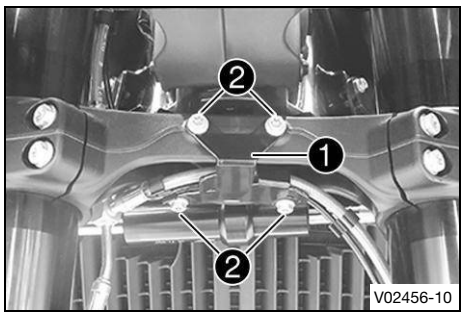

– Position retaining bracket ❶.
– Mount and tighten screws ❷.

Remaining screws on chassis	
M6	10 Nm (7.4 ft·lb$_f$)

13.5 Raising the vehicle with the center stand (Norden 901 Expedition)

NOTE

Material damage The vehicle may be damaged if parked incorrectly.

Damage can occur if the vehicle rolls away or falls over.

The components for parking the vehicle are designed only for the weight of the vehicle.

– Park the vehicle on a firm and level surface.
– Make sure that nobody sits on the vehicle when it is parked on a stand.

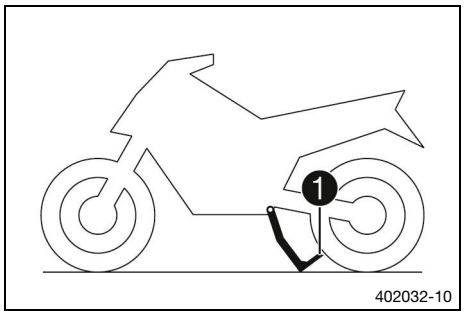

– Stand to the left of the vehicle.
– Hold the handlebar with your left hand and push the center stand onto the ground with your right foot.
– Put your entire body weight on arm ❶ of the center stand while pulling the vehicle up at the left grab handle.
  ✓ The center stand is folded out to the stop.

13.6 Removing the vehicle from the center stand (Norden 901 Expedition)

NOTE

Material damage The vehicle may be damaged if parked incorrectly.

Damage can occur if the vehicle rolls away or falls over.

The components for parking the vehicle are designed only for the weight of the vehicle.

– Park the vehicle on a firm and level surface.
– Make sure that nobody sits on the vehicle when it is parked on a stand.

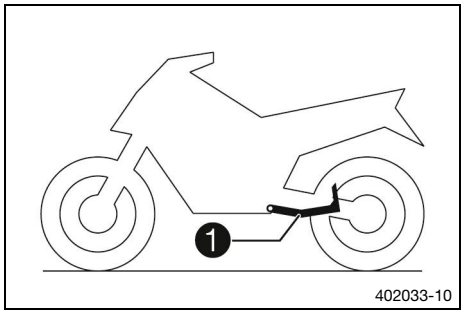

– Make sure that the steering is unlocked.
– Move the vehicle forward with both hands on the handlebar.
– While the vehicle tips off the center stand, actuate the front brake to stop the vehicle from rolling away.
– Check that the center stand ❶ is folded all the way up.

13.7 Removing the passenger seat

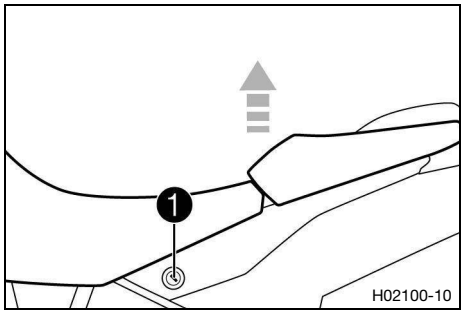

- Insert the ignition key in seat lock ❶ and turn it clockwise.
- Raise the front of the passenger seat, pull it toward the fuel tank, and take off from above.
- Remove the ignition key from the seat lock.

13.8 Mounting the passenger seat

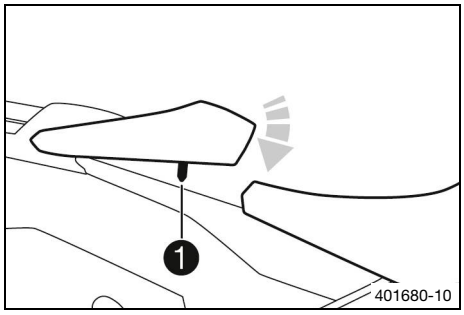

- Hook holding lugs of the passenger seat into the bushings on the subframe, lower the front, and simultaneously push backward.
- Insert locking pin ❶ into the lock housing and push down the front of the passenger seat until the locking pin engages with an audible click.

WARNING
Danger of accidents The seat can come loose from the anchoring if it is not mounted correctly.
- After assembly, check whether the seat is correctly locked and cannot be pulled up.

- Check that the passenger seat is mounted correctly.

13.9 Remove the front rider's seat

Preparatory work
- Remove the passenger seat. (p. 99)

Main work
- Lift the rider's seat back and unhook in the Ⓐ area.

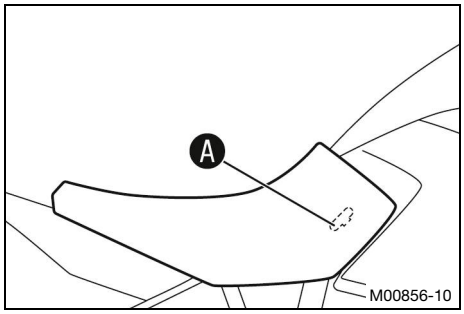

(Norden 901 Expedition)
- Disconnect plug-in connector of the heated rider seat.

13.10 Mounting the front rider's seat

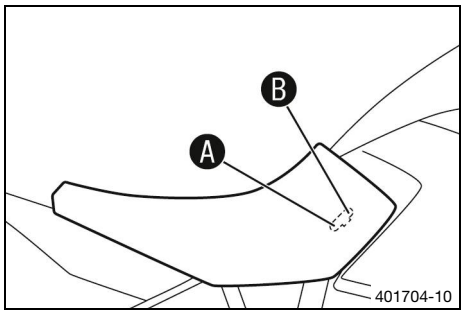

Main work
(Norden 901 Expedition)

- Connect the plug-in connector for the heated rider seat.
- Attach the recesses on the front rider's seat to the fuel tank at the desired seat position Ⓐ or Ⓑ, and push the front rider's seat forward while lowering it at the rear.
- Check that the front rider's seat is mounted correctly.

Reworking

- Mount the passenger seat. (p. 99)

13.11 Checking the chain for dirt

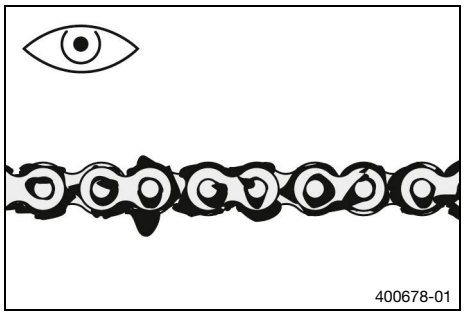

- Check the chain for coarse dirt accumulation.
  - » If the chain is very dirty:
    - Clean the chain. (p. 100)

13.12 Cleaning the chain

WARNING
Danger of accidents Oil, grease or wax on the brake discs reduces the brake action.
- Always keep the brake discs free of oil, fat and wax.
- Clean the brake discs with brake cleaner when necessary.

WARNING
Danger of accidents Lubricants on the tires reduces the road grip.
- Remove lubricants from the tires using a suitable cleaning agent.

NOTE
Environmental hazard Hazardous substances cause environmental damage.
- Dispose of oils, grease, filters, fuel, cleaning agents, brake fluid, etc. correctly and in accordance with the applicable regulations.

Note
The service life of the chain depends largely on its maintenance.

Preparatory work
– Raise the motorcycle with the rear lifting gear. (p. 96)

Main work
– Rinse off the loose dirt with a gentle jet of water.
– Remove old grease residues with a chain cleaner.

Chain cleaner (p. 203)

– After drying, apply chain spray.

Street chain spray (p. 199)

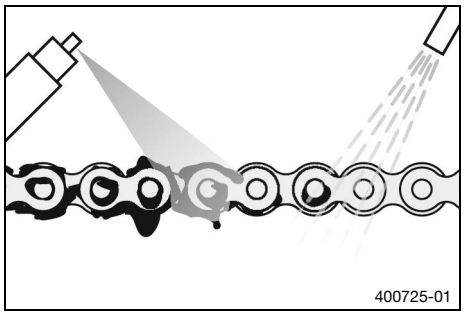

Reworking
– Remove the rear of the motorcycle from the lifting gear. (p. 96)

13.13 Checking the chain tension

WARNING
Danger of accidents Incorrect chain tension can damage components and result in an accident.
If the chain is tension is too high, the chain, front sprocket, rear sprocket, transmission, and rear wheel bearings wear more quickly. Some components may break if overloaded.
If the chain is too loose, the chain may fall off the front sprocket or the rear sprocket. This can damage the rear wheel or the engine.
– Check the chain tension regularly.
– Set the chain tension in accordance with the specification.

Preparatory work
– Raise the motorcycle with the rear lifting gear. (p. 96)

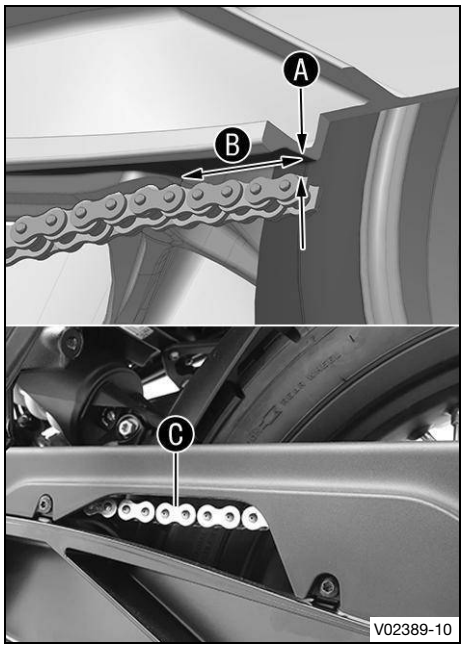

Main work

– Shift the transmission into neutral N.
– Push the chain behind the chain sliding piece up and determine the chain tension A between the link fork and the upper edge of the chain.

Distance B from the chain sliding piece	2.5 cm (0.98 in)
Measure the distance from the flat part of the link fork directly above the chain, not from the edge of the link fork.	
Chain tension	2 mm … 5 mm (0.08 in … 0.20 in)
The top part of chain C must be taut.	
Chain wear is not always even, so repeat this measurement at different positions on the chain.	

» If the chain tension does not meet the specification:
  – Adjust the chain tension. (p. 102)
– Remove the rear of the motorcycle from the lifting gear. (p. 96)

13.14 Adjusting the chain tension

WARNING

Danger of accidents Incorrect chain tension can damage components and result in an accident.

If the chain is tension is too high, the chain, front sprocket, rear sprocket, transmission, and rear wheel bearings wear more quickly. Some components may break if overloaded.

If the chain is too loose, the chain may fall off the front sprocket or the rear sprocket. This can damage the rear wheel or the engine.

– Check the chain tension regularly.
– Set the chain tension in accordance with the specification.

Preparatory work

– Raise the motorcycle with the rear lifting gear. (p. 96)
– Check the chain tension. (p. 101)

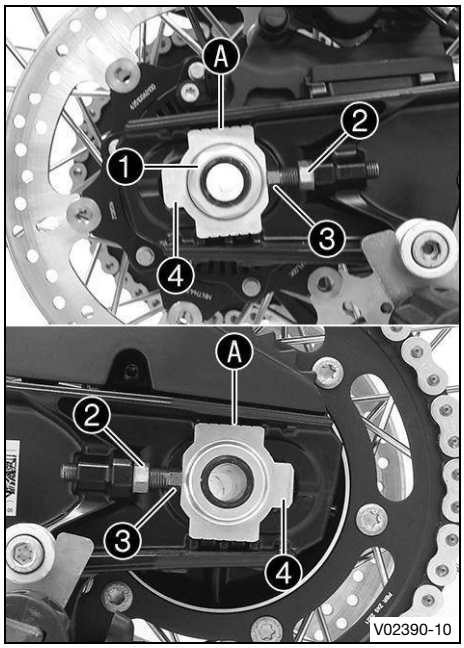

Main work

- Loosen nut ❶.
- Loosen nuts ❷.
- Adjust the chain tension by turning adjusting screws ❸ left and right.

Chain tension	2 mm … 5 mm (0.08 in … 0.20 in)
In order for the rear wheel to be correctly aligned, the markings on the left and right chain adjusters must be in the same position relative to reference markings Ⓐ.	
The upper part of the chain must be taut.	
Chain wear is not always even, so repeat this measurement at different positions on the chain.	

- Tighten nuts ❷.
- Make sure that chain adjusters ❹ are fitted correctly on adjusting screws ❸.
- Tighten nut ❶.

Nut, wheel spindle, rear	
M25×1.5	90 Nm (66.4 ft·lb$_f$) Long-life grease

Reworking

- Check the chain tension. (p. 101)
- Remove the rear of the motorcycle from the lifting gear. (p. 96)

13.15 Checking the chain, rear sprocket, front sprocket, and chain guide

Preparatory work

- Raise the motorcycle with the rear lifting gear. (p. 96)

Main work

- Shift the transmission into neutral N.

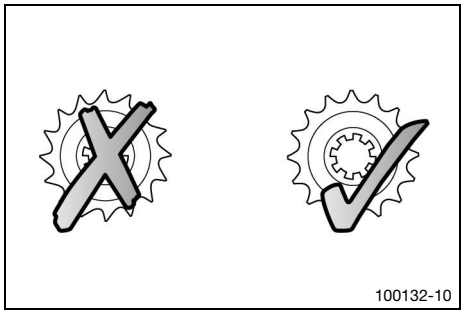

- Check the chain, rear sprocket, and front sprocket for wear.
  - » If the chain, rear sprocket, or front sprocket is worn:
    - Change the drivetrain kit.

Always replace the front sprocket, rear sprocket, and chain together.

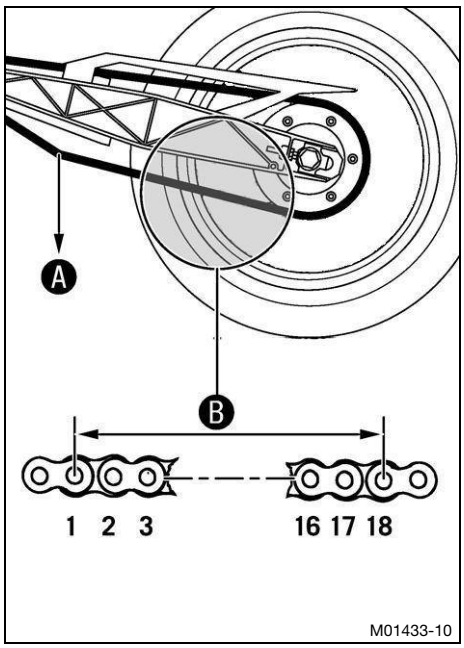

– Pull on the lower chain section with specified weight A.

Weight, chain wear measurement	15 kg (33.1 lb)

– Measure distance B of chain rollers in the lower chain section.

Chain wear is not always even, so repeat this measurement at different positions on the chain.	
Maximum distance B of chain rollers at the longest chain section	272 mm (10.71 in)

» If distance B is greater than the specified measurement:
  – Change the drivetrain kit.

When installing a new chain, also replace the rear sprocket and front sprocket.

Note

New chains wear out faster on old, worn sprockets.

For safety reasons, the chain has no chain joint.

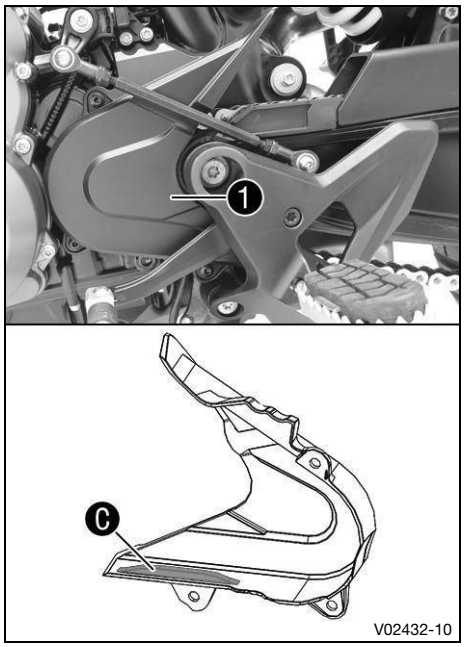

– Check the engine sprocket cover 1 for wear.
  » If the engine sprocket cover is highly worn in the marked area C:
    – Change the engine sprocket cover.
– Check the engine sprocket cover 1 for tightness.
  » If the engine sprocket cover is loose:
    – Tighten the screws on the engine sprocket cover.

Screw, sprocket cover	
M5×17	5 Nm (3.7 ft·lb$_f$)

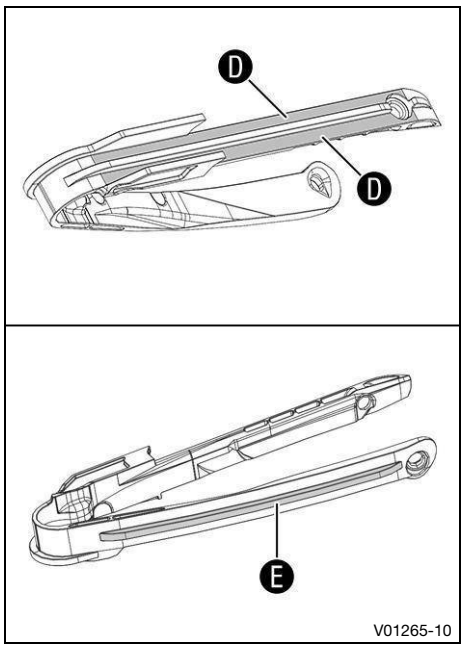

– Check the chain slider at the top for wear.
  » If continuous signs of wear to the chain are visible on the chain slider in the areas D marked:
    – Change the chain slider.
  » If the chain sliding guard is highly worn on the underside in the marked area E:
    – Change the chain slider.
– Check that the chain slider is firmly seated.
  » If the chain slider is loose:
    – Tighten the screws of the chain slider.

Remaining screws on chassis	
M5	5 Nm (3.7 ft·lb$_f$)

Reworking

– Remove the rear of the motorcycle from the lifting gear. (p. 96)

13.16 Removing the side bag rack (Norden 901 Expedition)

Preparatory work

– Remove the side bags. (p. 109)
– Remove the passenger seat. (p. 99)
– Remove the front rider's seat. (p. 99)
– Remove the left side cover. (p. 111)
– Remove the right side cover. (p. 112)

Main work

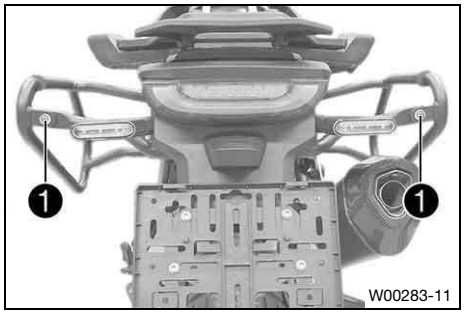

– Remove 1 screws.
– Remove the connecting pipe.

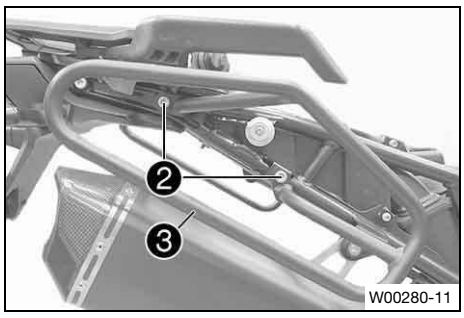

– Remove ❷ screws.
– Take off side bag rack ❸.

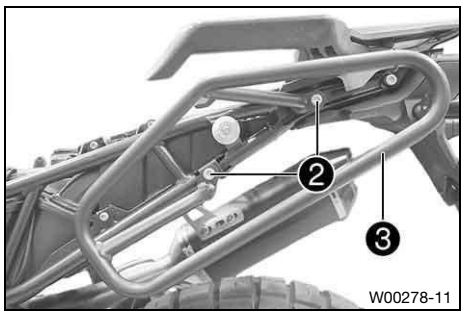

– Remove ❷ screws.
– Take off side bag rack ❸.

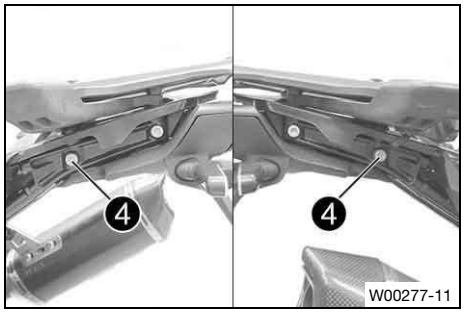

– Mount and tighten screws ❹.

Screw, side bag rack	
M8	25 Nm (18.4 ft·lb$_f$)

Reworking

– Install the left side cover. (p. 111)
– Install the right side cover. (p. 112)
– Mount the front rider's seat. (p. 100)
– Mount the passenger seat. (p. 99)

13.17 Fitting the side bag rack (Norden 901 Expedition)

WARNING

Danger of accidents Loading luggage can significantly affect the handling characteristics.

Luggage affects the handling, cornering and braking characteristics, particularly when fully laden, and increases crosswind sensitivity.

– Ride especially carefully in strong wind.
– Slowly accelerate to the permitted maximum speed.

Maximum speed with luggage mounted	130 km/h (80.8 mph)

WARNING

Danger of accidents Overloading, a one-sided payload, or the luggage slipping impairs handling characteristics.

– Make sure that the maximum payload is not exceeded.

Payload per side bag	≤ 3 kg (≤ 6.6 lb)

– Distribute the luggage evenly on both sides (for side bags mounted on both sides).
– Secure the side bags against slipping.

Preparatory work

– Remove the passenger seat. (p. 99)
– Remove the front rider's seat. (p. 99)
– Remove the left side cover. (p. 111)
– Remove the right side cover. (p. 112)

Main work

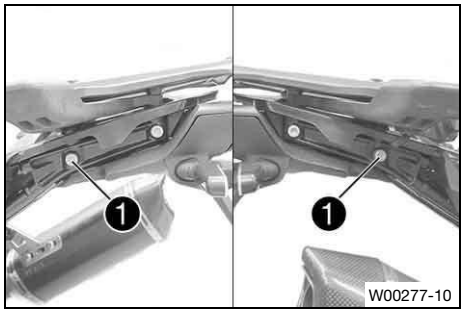

– Remove screws ❶.

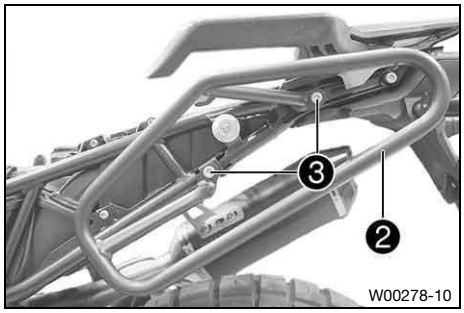

– Position left side bag rack ❷.

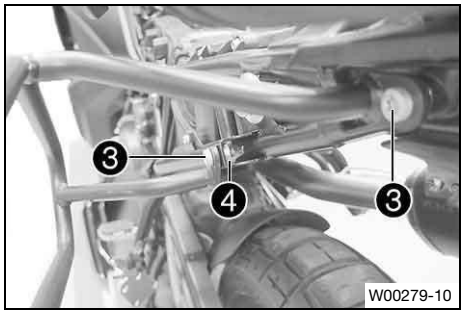

– Mount screws ❸ and nut ❹, but do not tighten yet.

Screw, side bag rack	
M8×20	25 Nm (18.4 ft·lb$_f$) **Loctite® 243**

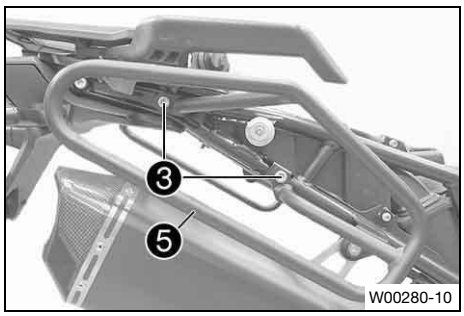

– Position right side bag rack ❺.

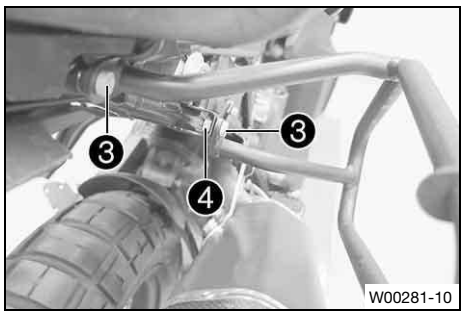

– Mount screws ❸ and nut ❹, but do not tighten yet.

Screw, side bag rack	
M8×20	25 Nm (18.4 ft·lb$_f$) **Loctite® 243**

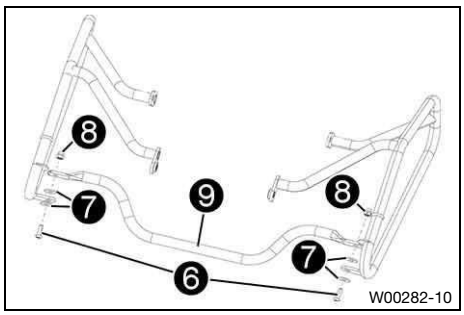

– Position connecting pipe ❾ with washers ❼.
  ✓ The connecting pipe is located in front of the screw connection point of the side bag rack.
  ✓ The recess of the connecting pipe points toward the rear.
– Mount screws ❻ with washers ❼ and nuts ❽, but do not tighten yet.

Screw, side bag rack	
M6	10 Nm (7.4 ft·lb$_f$) **Loctite® 243**

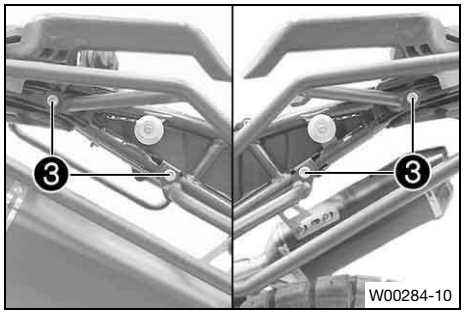

– Tighten screws ❸.

Screw, side bag rack	
M8×20	25 Nm (18.4 ft·lb$_f$) **Loctite® 243**

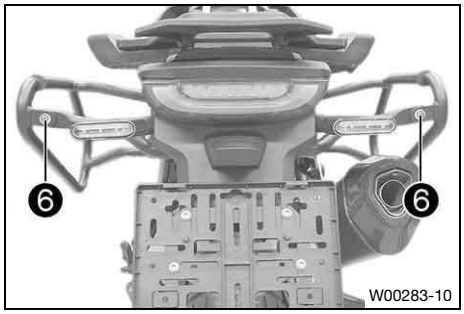

– Tighten screws ❻.

Screw, side bag rack	
M6	10 Nm (7.4 ft·lb$_f$) **Loctite® 243**

Reworking

- Install the left side cover. (p. 111)
- Install the right side cover. (p. 112)
- Mount the front rider's seat. (p. 100)
- Mount the passenger seat. (p. 99)
- Fit the side bags. (p. 110)

13.18 Removing the side bags (Norden 901 Expedition)

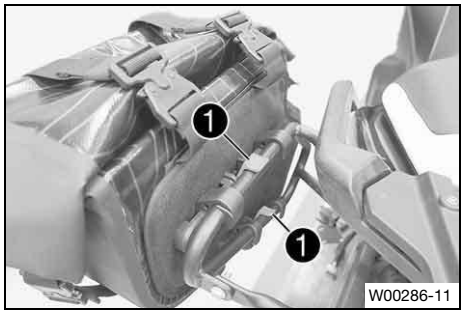

- To remove the bag, press locking clips ❶ away from the rack.

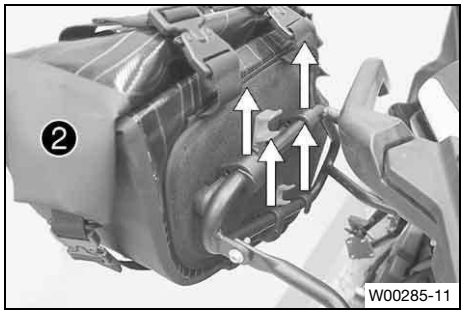

- Remove side bag ❷ upwards.

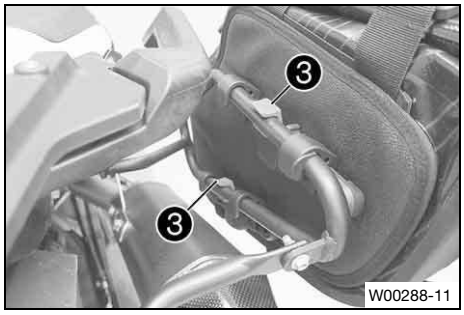

- To remove the bag, press locking clips ❸ away from the rack.

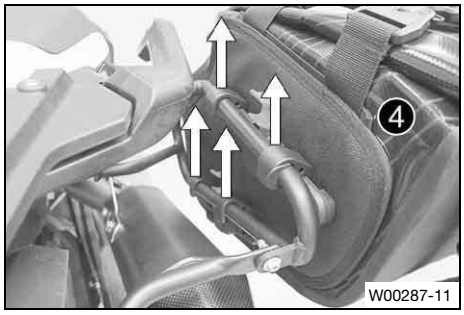

- Remove side bag ❹ upwards.

13.19 Fitting the side bags (Norden 901 Expedition)

WARNING

Danger of accidents Loading luggage can significantly affect the handling characteristics.

Luggage affects the handling, cornering and braking characteristics, particularly when fully laden, and increases crosswind sensitivity.

– Ride especially carefully in strong wind.
– Slowly accelerate to the permitted maximum speed.

Maximum speed with luggage mounted	130 km/h (80.8 mph)

WARNING

Danger of accidents Overloading, a one-sided payload, or the luggage slipping impairs handling characteristics.

– Make sure that the maximum payload is not exceeded.

Payload per side bag	≤ 3 kg (≤ 6.6 lb)

– Distribute the luggage evenly on both sides (for side bags mounted on both sides).
– Secure the side bags against slipping.

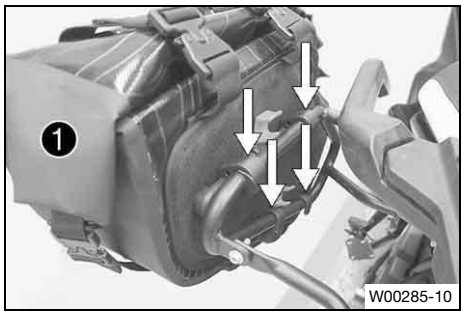

– Position left side bag brackets ❶ above and below on the side bag rack and press downwards until they are firmly seated on the rack.

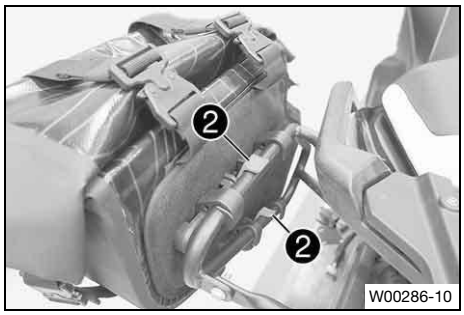

– Press locking clips ❷ down until they click into place on the rack.

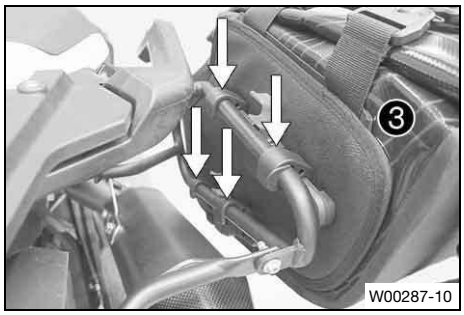

– Position right side bag brackets ❸ above and below on the side bag rack and press downwards until they are firmly seated on the rack.

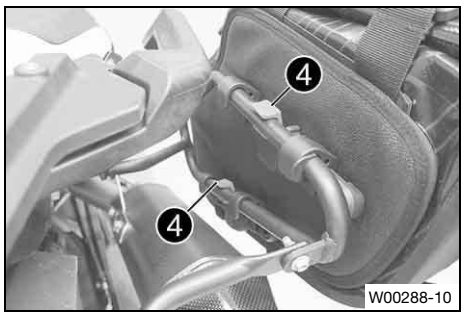

– Press locking clips ❹ down until they click into place on the rack.

Make sure that all accessory parts and pieces of luggage are carefully attached.
Check all the screw connections to ensure that they are tight.
The side bags must be kept closed at all times during the ride.

13.20 Removing the left side cover

Preparatory work

– Remove the passenger seat. (p. 99)
– Remove the front rider's seat. (p. 99)

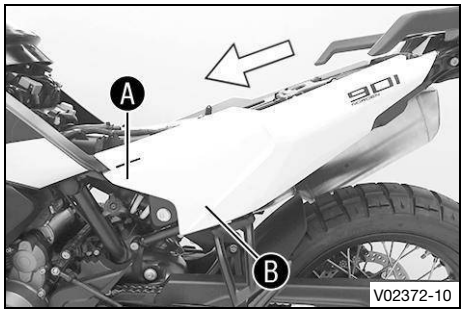

Main work

– Remove left side cover from the rubber bushings in the areas Ⓐ and Ⓑ.
– Pull off the left side cover sideways and remove it toward the front.

13.21 Installing the left side cover

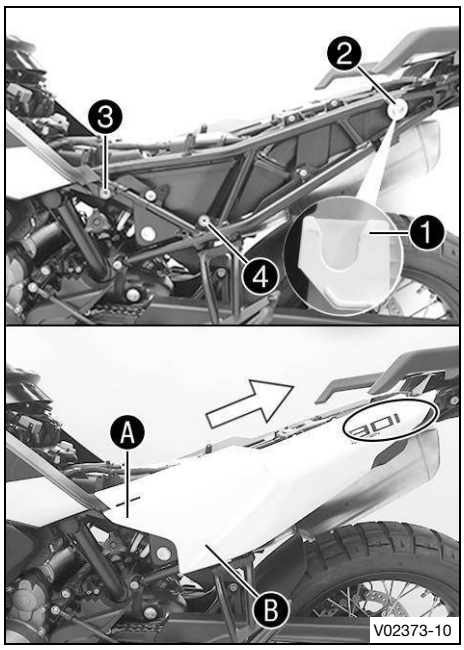

Main work

– Position the left side cover with holding lug ❶ on bushing ❷ and push backward.
  ✓ The left side cover engages under the tail part.
– Press the left side cover in area Ⓐ into rubber bushing ❸ and press into rubber bushing Ⓑ in area ❹.

Reworking

– Mount the front rider's seat. (p. 100)
– Mount the passenger seat. (p. 99)

13.22 Removing the right side cover

Preparatory work

– Remove the passenger seat. (p. 99)
– Remove the front rider's seat. (p. 99)

Main work

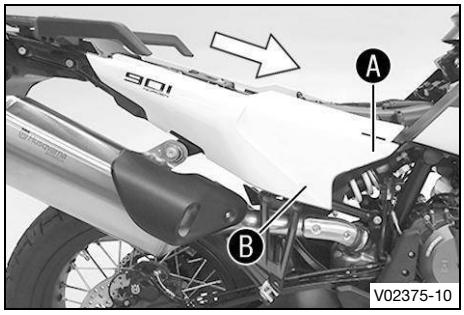

– Remove the side cover from the rubber bushings in areas A and B.
– Pull off the right side cover sideways and remove it toward the front.

13.23 Installing the right side cover

Main work

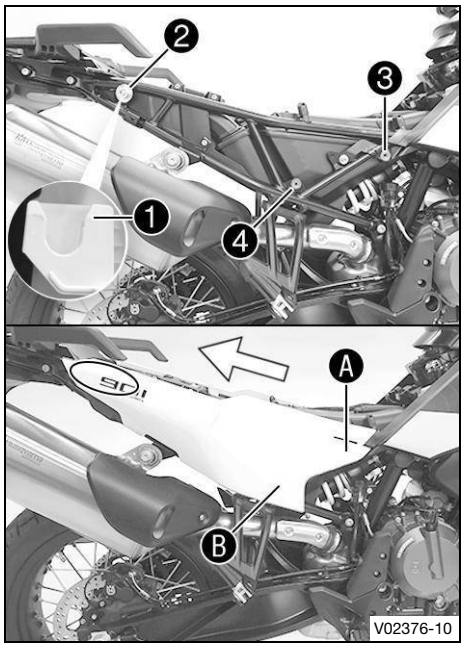

– Position the right side cover with holding lug 1 on bushing 2 and push backward.
  ✓ The right side cover engages under the tail part.
– Press the right side cover in the area A into rubber bushing 3 and press into rubber bushing B in area 4.

Reworking

– Mount the front rider's seat. (p. 100)
– Mount the passenger seat. (p. 99)

13.24 Removing the battery cover

Preparatory work

– Remove the passenger seat. (p. 99)
– Remove the front rider's seat. (p. 99)

Main work

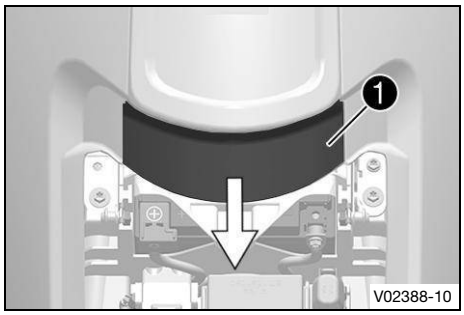

– Pull battery cover ❶ toward the rear out of the brackets.

13.25 Installing the battery cover

Main work

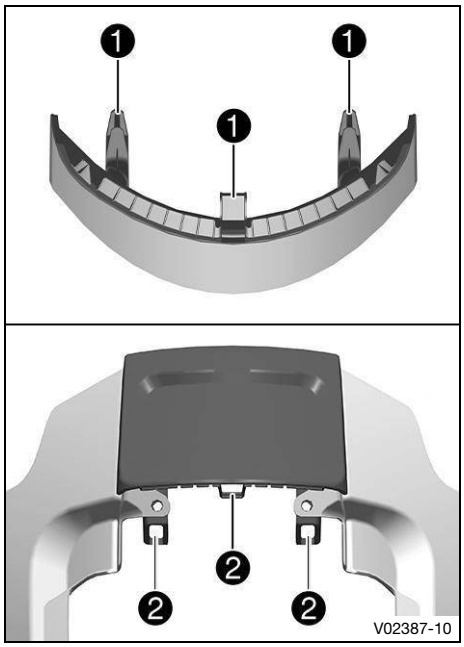

– Position the battery cover with holding lugs ❶ on brackets ❷ of the center fuel tank spoiler and push it forward.

Make sure the holding lugs engage in the brackets.

Reworking

– Mount the front rider's seat. (p. 100)
– Mount the passenger seat. (p. 99)

13.26 Removing the center fuel tank spoiler

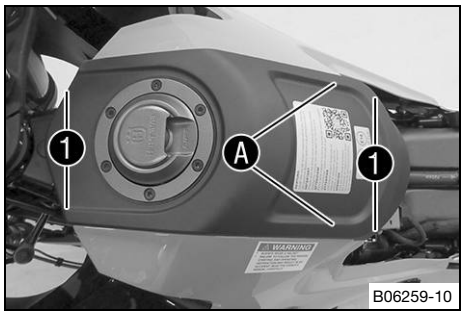

Preparatory work

- Remove the passenger seat. (p. 99)
- Remove the front rider's seat. (p. 99)
- Remove the battery cover. (p. 113)

Main work

- Remove screws 1.
- Pull the middle fuel tank spoiler in areas A out of the bracket.

13.27 Installing the center fuel tank spoiler

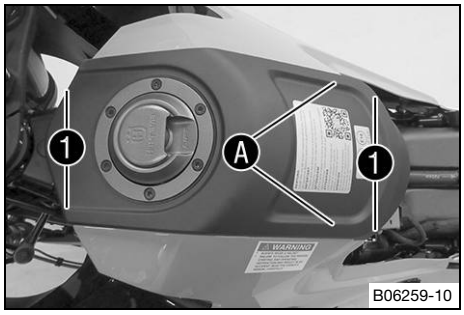

Main work

- Position the center fuel tank spoiler and press the holding lugs in areas A into the bracket.

Make sure the holding lugs engage in the brackets.

- Mount and tighten screws 1.

Screw, trim	
M5	3 Nm (2.2 ft·lb$_f$)

Reworking

- Install the battery cover. (p. 113)
- Mount the front rider's seat. (p. 100)
- Mount the passenger seat. (p. 99)

13.28 Removing left fuel tank spoiler

Preparatory work

- Remove the passenger seat. (p. 99)
- Remove the front rider's seat. (p. 99)
- Remove the battery cover. (p. 113)
- Remove the center fuel tank spoiler. (p. 114)

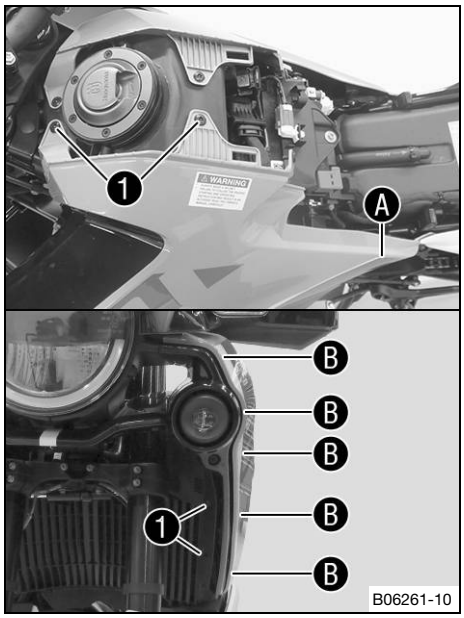

Main work

- Remove ❶ screws.
- Remove the left fuel tank spoiler from the rubber bushing in area Ⓐ.
- Pull the left fuel tank spoiler in areas Ⓑ out of the brackets.
- Take off the left fuel tank spoiler, pulling it sideways.

13.29 Installing the left fuel tank spoiler

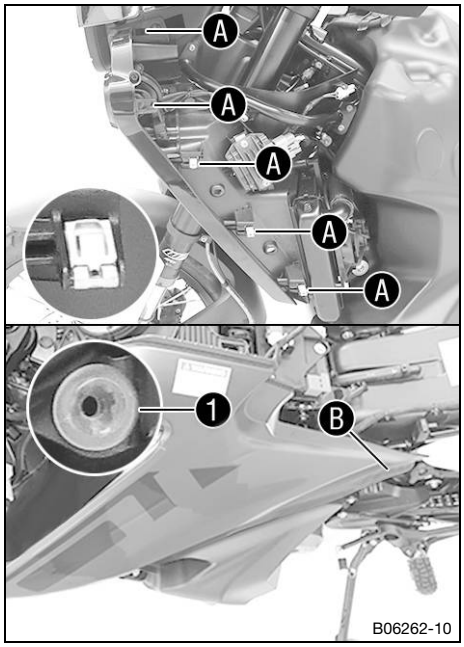

Main work

- Position the left fuel tank spoiler and press it into the brackets in areas Ⓐ.

  Make sure the holding lugs engage in the brackets.

- Press the left fuel tank spoiler into rubber bushing Ⓑ in area ❶.

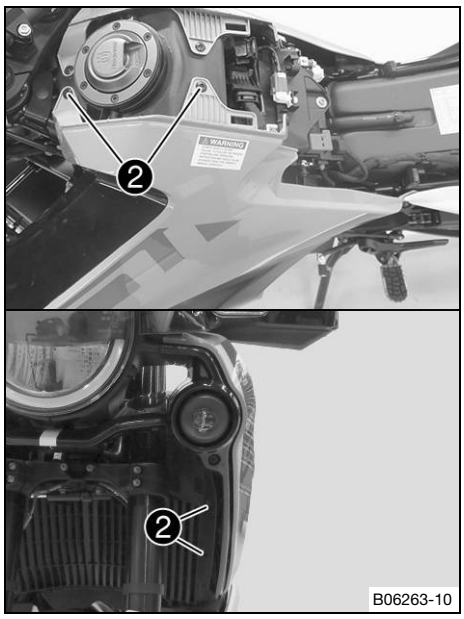

– Mount screws ❷, but do not tighten yet.

Screw, trim	
M5	3 Nm (2.2 ft·lb$_f$)

✓ The front edge of the left fuel tank spoiler is evenly aligned.

– Tighten all the screws of the left fuel tank spoiler.

Reworking

– Install the center fuel tank spoiler. (p. 114)
– Install the battery cover. (p. 113)
– Mount the front rider's seat. (p. 100)
– Mount the passenger seat. (p. 99)

13.30 Removing the right fuel tank spoiler

Preparatory work

– Remove the passenger seat. (p. 99)
– Remove the front rider's seat. (p. 99)
– Remove the battery cover. (p. 113)
– Remove the center fuel tank spoiler. (p. 114)

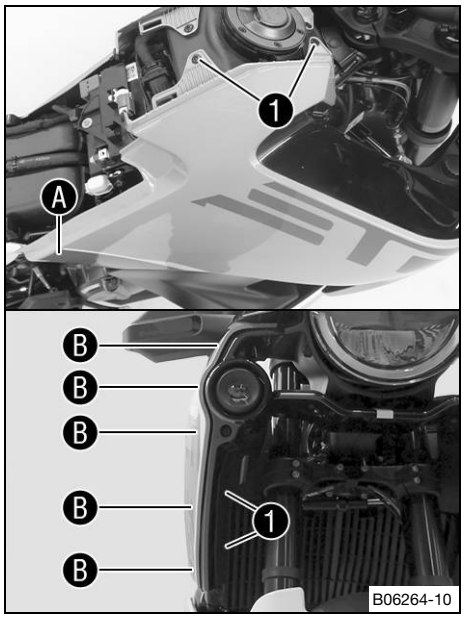

Main work

- Remove ❶ screws.
- Remove the fuel tank spoiler from the rubber bushing in area Ⓐ.
- Pull the right fuel tank spoiler in areas Ⓑ out of the brackets.
- Take off the right fuel tank spoiler, pulling it sideways.

13.31 Installing the right fuel tank spoiler

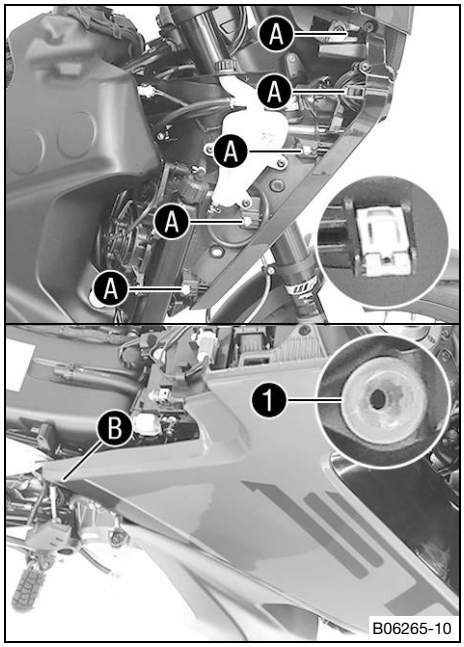

Main work

- Position the right fuel tank spoiler and press it into the brackets in areas Ⓐ.

  Make sure the holding lugs engage in the brackets.

- Press the right fuel tank spoiler into rubber bushing Ⓑ in area ❶.

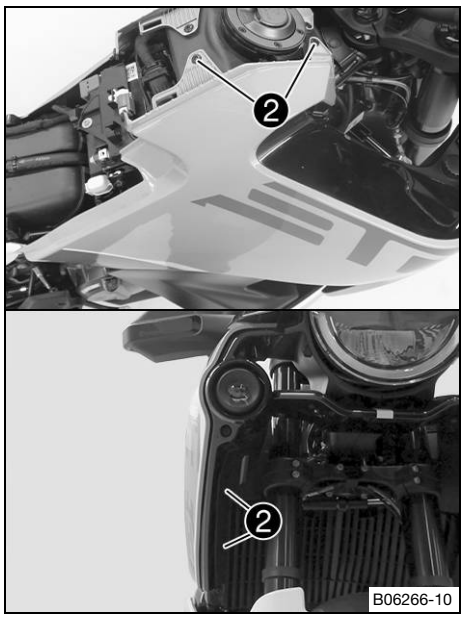

– Mount screws ❷, but do not tighten yet.

Screw, trim	
M5	3 Nm (2.2 ft·lb$_f$)

✓ The front edge of the right fuel tank spoiler is evenly aligned.

– Tighten all the screws of the right fuel tank spoiler.

Reworking

– Install the center fuel tank spoiler. (p. 114)
– Install the battery cover. (p. 113)
– Mount the front rider's seat. (p. 100)
– Mount the passenger seat. (p. 99)

13.32 Removing the front top fender

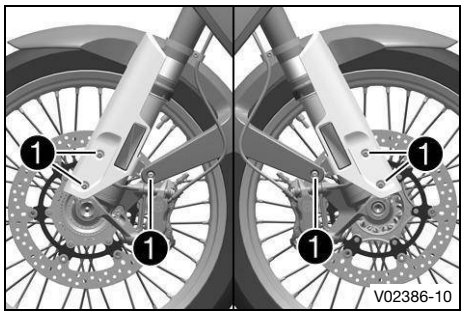

– Remove ❶ screws.
– Take the fender off to the front.

Pay attention to the brake lines and the cable.

13.33 Installing the front top fender

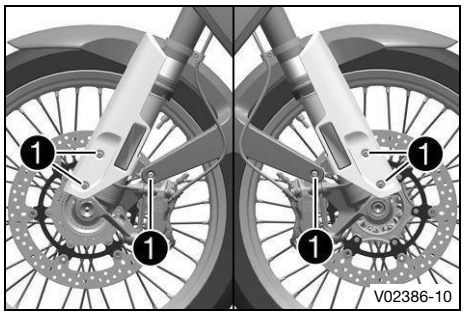

– Position the fender. Mount screws ❶, but do not tighten yet.

Pay attention to the routing of the brake lines and the cable.

– Mount and tighten screws ❶.

Screw, fender on fork protector	
M5×12	3 Nm (2.2 ft·lb$_f$)

13.34 Cleaning the dust boots of the fork legs

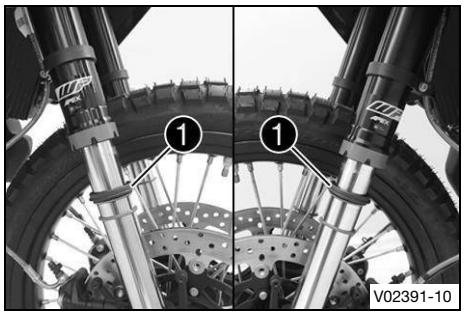

Preparatory work

– Raise the motorcycle with the rear lifting gear. (p. 96)
– Lift the motorcycle with the front lifting gear. (p. 96)

Main work

– Push dust boot ❶ downward on both fork legs.

Note
The dust boots should remove dust and coarse dirt particles from the inner fork tubes. Over time, dirt can accumulate behind the dust boots. If this dirt is not removed, the oil seals behind can start to leak.

WARNING
Danger of accidents Oil, grease or wax on the brake discs reduces the brake action.
– Always keep the brake discs free of oil, fat and wax.
– Clean the brake discs with brake cleaner when necessary.

– Clean and oil the dust boots and the inner fork tube of both fork legs.

Universal oil spray (p. 199)

– Press the dust boots back into their installation position.
– Remove excess oil.

Reworking

– Take the motorcycle off the front lifting gear. (p. 97)
– Remove the rear of the motorcycle from the lifting gear. (p. 96)

13.35 Removing the windshield

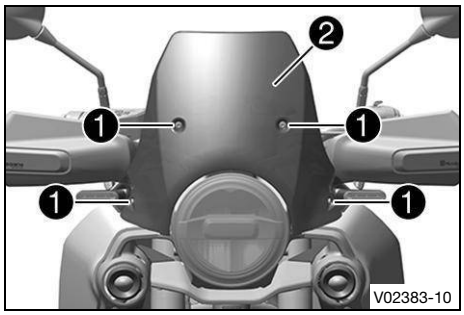

– Remove screws ❶ and take off windshield ❷.

13.36 Installing the windshield

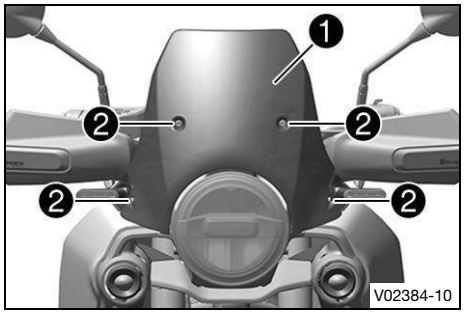

– Position windshield ❶.
– Mount and tighten screws ❷.

Windshield screw	
M5×14	5 Nm (3.7 ft·lb$_f$)

13.37 Removing left fuel tank cover

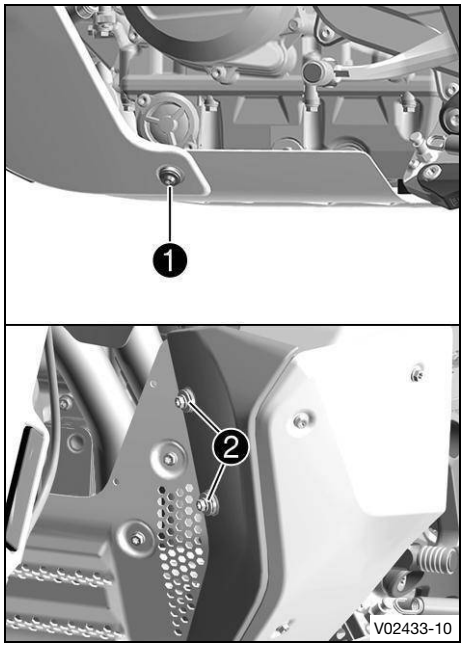

– Remove screw connection ❶.
– Remove ❷ screws.
– Take off the left fuel tank cover, pulling it downward.

13.38 Installing the left fuel tank cover

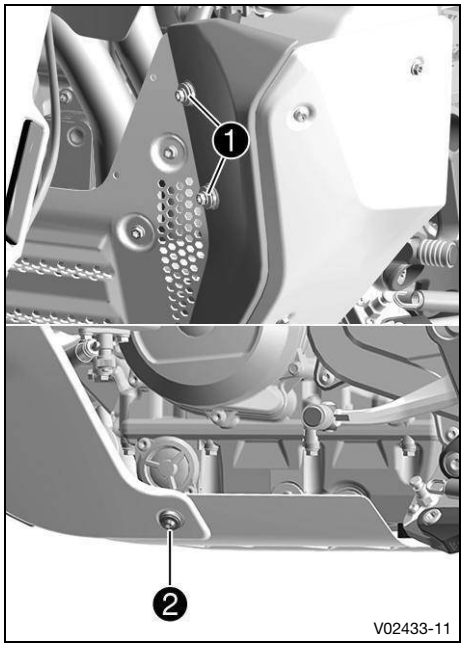

– Position the left fuel tank cover.
– Mount screws ❶, but do not tighten yet.

Screw, tank guard on engine guard, front	
M6×25	10 Nm (7.4 ft·lb$_f$)

– Mount fitting ❷, but do not tighten yet.

Screw, tank guard on engine guard, bottom	
M6×18	10 Nm (7.4 ft·lb$_f$)

✓ The left fuel tank cover is directed evenly toward the front.
– Tighten all the screws of the left fuel tank cover.

13.39 Removing right fuel tank cover

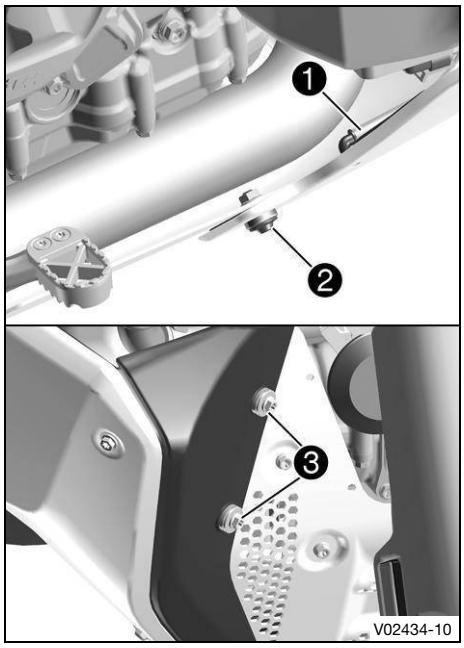

– Pull out hose ❶ from the angle piece.
– Remove screw connection ❷.
– Remove ❸ screws.
– Remove right fuel tank cover.

13.40 Installing the right fuel tank cover

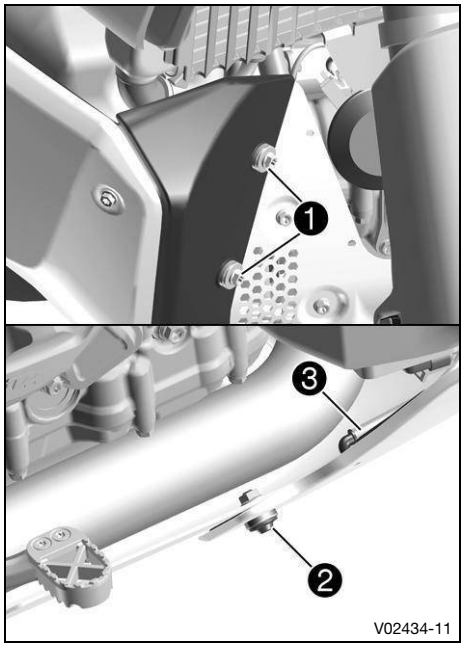

– Position the right fuel tank cover.
– Mount screws ❶, but do not tighten yet.

Screw, tank guard on engine guard, front	
M6×25	10 Nm (7.4 ft·lb$_f$)

– Mount fitting ❷, but do not tighten yet.

Screw, tank guard on engine guard, bottom	
M6×18	10 Nm (7.4 ft·lb$_f$)

✓ The right fuel tank cover is directed evenly toward the front.
– Tighten all the screws of the right fuel tank cover.
– Attach hose ❸ to the angle piece.

13.41 Removing the skid plate

(Norden 901)

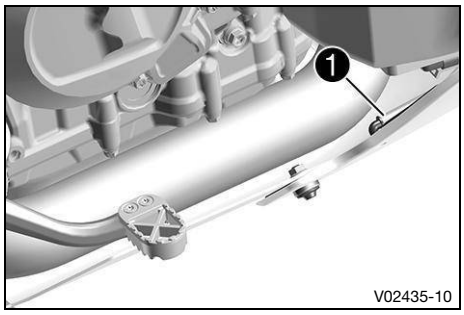

– Pull out hose ❶ from the angle piece.

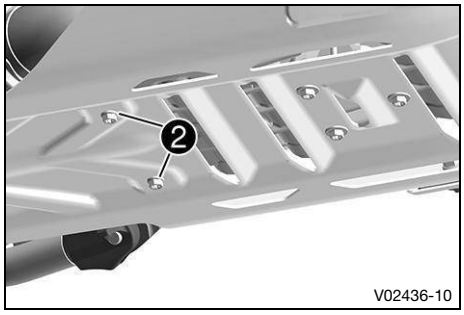

– Remove ❷ screws.

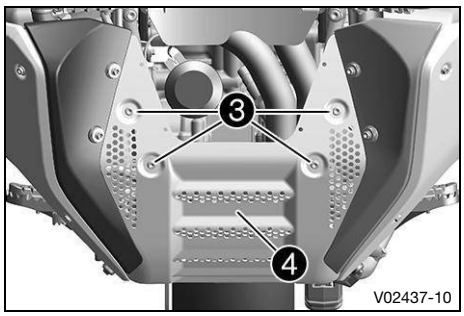

– Remove screws ❸ and engine guard ❹.

(Norden 901 Expedition)

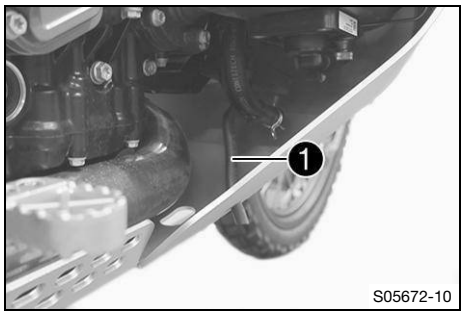

– Pull hose ❶ out of the engine guard.

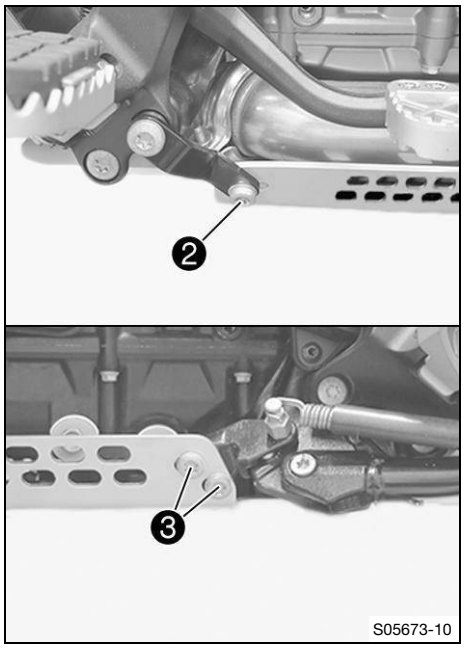

– Remove screw ❷ and screws ❸.

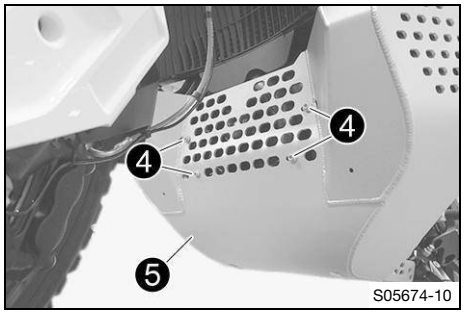

– Remove screws ❹ and engine guard ❺.

13.42 Installing the skid plate

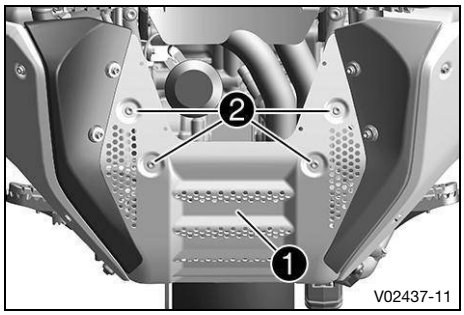

(Norden 901)

– Position engine guard ❶.
– Mount screws ❷, but do not tighten yet.

Screw, engine guard	
M6×10	10 Nm (7.4 ft·lb$_f$) **Loctite® 243**

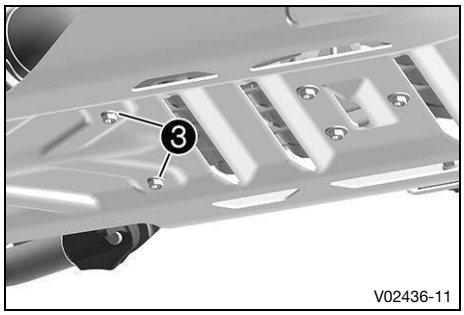

– Mount screws ❸, but do not tighten yet.

Screw, engine guard	
M6×8	8 Nm (5.9 ft·lb$_f$)

– Tighten all the screws of the skid plate.

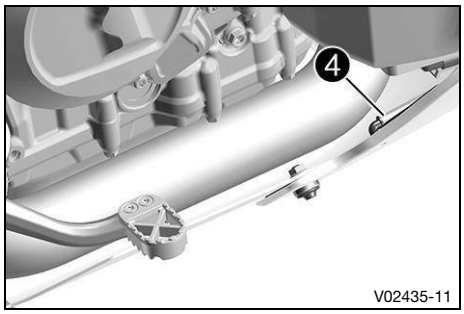

– Attach hose ❹ to the angle piece.

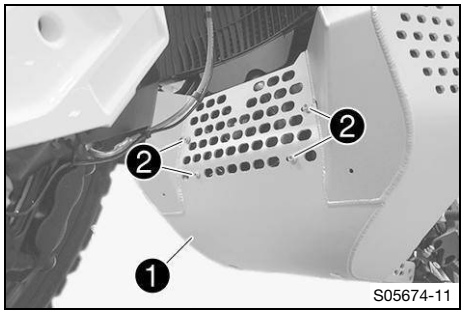

(Norden 901 Expedition)

– Position engine guard ❶.
– Mount screws ❷, but do not tighten yet.

Screw, engine guard	
M6×13	10 Nm (7.4 ft·lb$_f$)

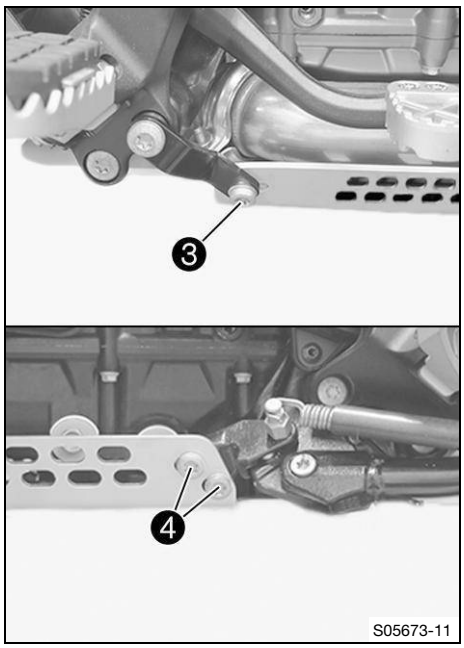

– Mount screw ❸ and screws ❹, but do not tighten yet.

Screw, engine guard rack	
M8×20	15 Nm (11.1 ft·lb$_f$)
Screw, retaining bracket	
M8×20	15 Nm (11.1 ft·lb$_f$)

– Tighten all the screws of the skid plate.

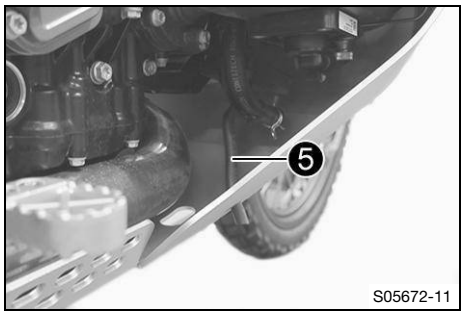

– Insert hose ❺ through the engine guard.

14.1 Anti-lock braking system

WARNING

Danger of accidents Changes to the vehicle impair the function of the ABS.

- Do not make any changes to the suspension travel.
- Only use spare parts on the brake system which have been approved and recommended by the vehicle manufacturer.
- Only use tires and wheels approved and recommended by the vehicle manufacturer with the corresponding speed rating.
- Maintain the specified tire pressure.
- Ensure that service work and repairs are performed professionally.

WARNING

Danger of accidents Driving aids can reduce the probability of a fall only within physical limits.

It is not always possible to compensate for certain riding situations, for example with luggage loaded with a high center of gravity, varying road surfaces, steep descents or full braking without disengaging the gear.

- Adapt your riding style to the road conditions and your driving ability.

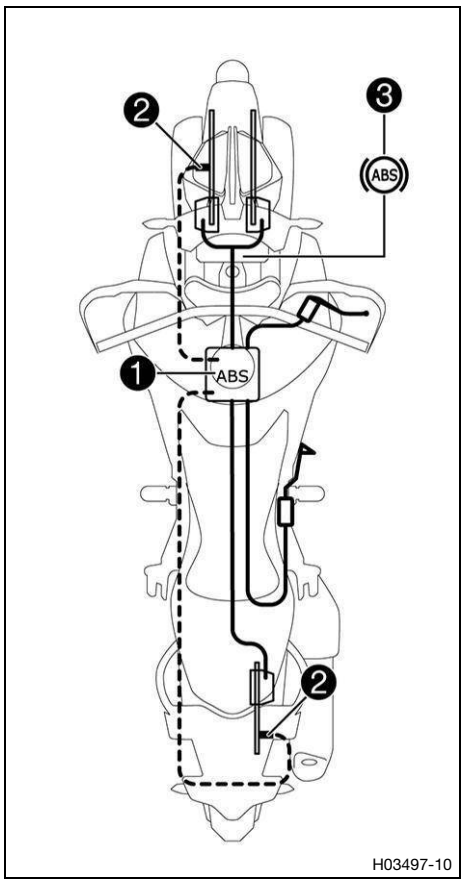

The **ABS** module ❶, which consists of a hydraulic unit, ABS control unit, and return pump, is installed under the fuel tank. One wheel speed sensor ❷ is located in each case on the front and the rear wheel.

WARNING
Danger of accidents An incorrectly selected ABS mode makes it more difficult to control the vehicle. The ABS modes are each only suitable for certain conditions.
– Always select an ABS mode that suits the ground and the riding situation.

The **ABS** is a safety system that prevents the wheels locking when driving straight ahead or when cornering (within the limits of physics).
The ABS control is dependent on the riding mode. ABS has two operating modes: the **Road** and **Offroad** ABS modes.
In riding modes **Street** and **Rain**, the ABS controls both wheels.
In riding mode **Offroad**, there is no ABS control on the rear wheel.
ABS can be configured in riding mode **Explorer** (optional).
In ABS mode **Road**, ABS controls both wheels.
In ABS mode **Offroad**, there is no ABS control on the rear wheel.

Note
The curve dependent control is only active in ABS mode **Road**.

The ABS operates with two independent brake circuits (front and rear brakes). When the ABS control unit detects a locking tendency in a wheel, ABS begins regulating the brake pressure. The control function causes a slight pulsing of the hand and foot brake levers.
The ABS warning light ❸ must light up after the ignition is switched on and go out after starting off. If it does not go out after starting off or if it lights up while riding, this indicates a malfunction in the ABS. In this case, the ABS is no longer enabled and the wheels may lock during braking. The brake system itself stays functional; only ABS control is not available.
The ABS warning light may also light up if the rotating speeds of the front and rear wheels differ greatly under extreme riding conditions, for example when doing a wheelie or if the rear wheel spins. This causes the ABS to switch off.
To reactivate the ABS, stop the vehicle and switch off the ignition. The ABS is reactivated when the vehicle is switched on again. The ABS warning light goes out after starting off.

14.2 Checking the brake discs

WARNING
Danger of accidents Worn-out brake discs reduce the braking action.
– Make sure that worn-out brake discs are replaced immediately.

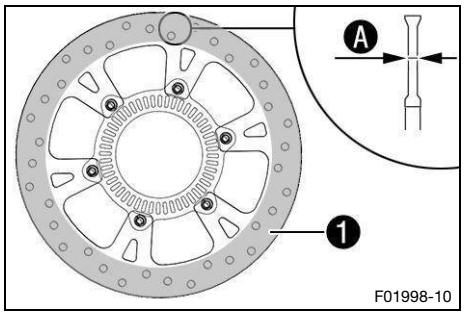

– Check the brake disc thickness of the front and rear brake disc at several places on the disc to see if they conform to measurement Ⓐ.

Brake disc wear limit	
front	4.5 mm (0.177 in)
rear	4.5 mm (0.177 in)

Note
Wear will reduce the thickness of the brake disc at contact surface ❶ of the brake linings.

» If the brake disc thickness is less than the specified value.
  – Change the front brake discs.
  – Change the brake discs on the rear brake.

– Check the front and rear brake discs for damage, cracks, and deformation.
  » If the brake disc shows signs of damage, cracks, or deformation:
    – Change the front brake discs.
    – Change the brake discs on the rear brake.

14.3 Checking the brake fluid level for the front brake

WARNING
Danger of accidents Brake fluid which is too old or of the wrong type impairs the function of the brake system.
– Make sure that brake fluid for the front and rear brake is changed in accordance with the service schedule.
– Make sure that only clean, approved brake fluid from a tightly sealed container is used.

WARNING
Danger of accidents An insufficient brake fluid level will cause the brake system to fail.
If the brake fluid level drops below the specified marking or the specified value, the brake system has a leak or the brake pads are worn down.
– Have the brake system checked and make sure that the problem has been eliminated before the vehicle is used again.

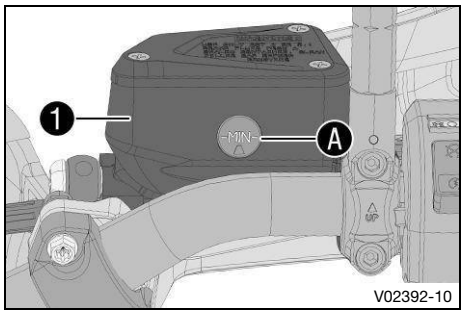

– Move the brake reservoir mounted on the handlebar to a horizontal position.
– Check brake fluid level in brake fluid reservoir 1.
  » If the brake fluid level has dropped below **MIN** marking A:
    – Add brake fluid for the front brake. (p. 128)

14.4 Adding brake fluid for the front brake

WARNING
Danger of accidents Brake fluid which is too old or of the wrong type impairs the function of the brake system.
– Make sure that brake fluid for the front and rear brake is changed in accordance with the service schedule.
– Make sure that only clean, approved brake fluid from a tightly sealed container is used.

WARNING
Danger of accidents An insufficient brake fluid level will cause the brake system to fail.
If the brake fluid level drops below the specified marking or the specified value, the brake system has a leak or the brake pads are worn down.
– Have the brake system checked and make sure that the problem has been eliminated before the vehicle is used again.

WARNING

Health hazard Brake fluid is a harmful substance.

- Keep brake fluid out of the reach of children.
- Wear suitable protective clothing and safety glasses.
- Do not allow brake fluid to come into contact with the skin, the eyes, or clothing.
- Consult a doctor immediately if brake fluid has been ingested.
- Rinse the affected area with plenty of water in the event of contact with the skin.
- Rinse eyes thoroughly with water immediately and consult a doctor if brake fluid comes into contact with the eyes.
- If brake fluid spills on to your clothing, change the clothing.

NOTE

Environmental hazard Hazardous substances cause environmental damage.

- Dispose of oils, grease, filters, fuel, cleaning agents, brake fluid, etc. correctly and in accordance with the applicable regulations.

Note

Avoid contact between brake fluid and painted parts. Brake fluid corrodes paint.

Preparatory work

- Check that the brake pads of the front brake are secured. (p. 130)

Main work

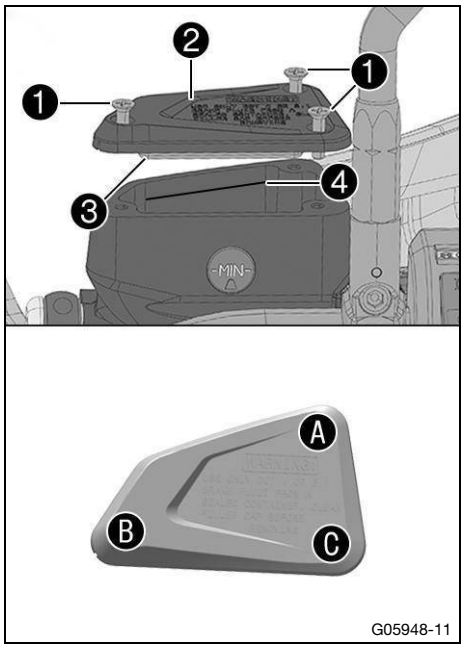

- Move the brake reservoir mounted on the handlebar to a horizontal position.
- Remove ❶ screws.
- Take off cover ❷ with diaphragm ❸.
- Add brake fluid to mark ❹.

Brake fluid DOT 5.1 (p. 200)

- Position cover ❷ with diaphragm ❸.
- Mount screws ❶ and tighten in the order Ⓐ Ⓑ Ⓒ.

Brake fluid reservoir cover, front	
	2 Nm (1.5 ft·lb$_f$)

Immediately clean up any brake fluid that has overflowed or spilled with water.

14.5 Checking that the brake pads of the front brake are secured

WARNING
Danger of accidents Worn brake pads reduce the brake action.
– Make sure that worn brake pads are replaced immediately.

WARNING
Danger of accidents Damaged brake discs reduce the braking action.
If the brake linings are not changed in time, the brake lining carriers grind against the brake disc. As a consequence, the brake action is greatly reduced and the brake discs are destroyed.
– Check the brake linings regularly.

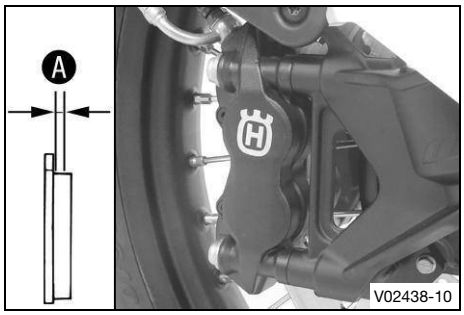

– Check all brake linings on both brake calipers to ensure they have the minimum thickness A.

Minimum pad thickness A	≥ 1 mm (≥ 0.04 in)

» If the minimum thickness is less than specified:
  – Change the front brake pads.
– Check all the brake linings on both the brake calipers for damage and cracking.
» If there is damage or cracking:
  – Change the front brake pads.
– Check that the brake pads are secured.
» If the brake pads are not secured correctly:
  – Secure brake pads, replace with new parts if necessary.

14.6 Checking the free travel of the brake pedal

WARNING
Danger of accidents The brake system fails in the event of overheating.
If there is no free travel on the brake lever, pressure builds up in the brake system.
– Set the free travel on the brake lever as specified.

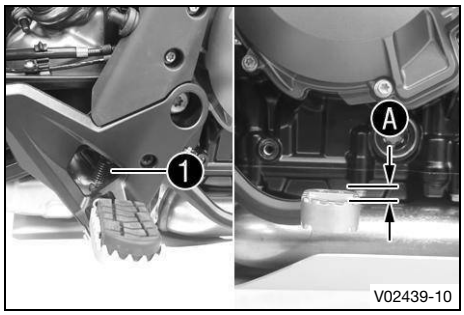

– Detach spring 1.
– Move the brake pedal back and forth between the end stop and the brake pedal cylinder piston actuation and check free travel A.

Free travel of brake pedal	3 mm … 5 mm (0.12 in … 0.20 in)

» If the free travel does not meet the specifications:
  – Adjust the basic position of the brake pedal. (p. 71)
– Attach spring 1.

14.7 Checking the brake fluid level for the rear brake

WARNING
Danger of accidents Brake fluid which is too old or of the wrong type impairs the function of the brake system.
– Make sure that brake fluid for the front and rear brake is changed in accordance with the service schedule.
– Make sure that only clean, approved brake fluid from a tightly sealed container is used.

WARNING
Danger of accidents An insufficient brake fluid level will cause the brake system to fail.
If the brake fluid level drops below the specified marking or the specified value, the brake system has a leak or the brake pads are worn down.
– Have the brake system checked and make sure that the problem has been eliminated before the vehicle is used again.

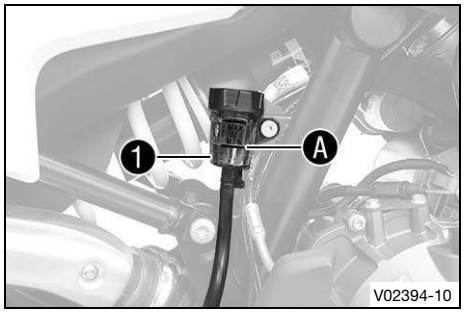

– Stand the vehicle upright.
– Check brake fluid level in brake fluid reservoir 1.
» If the fluid level reaches the **MIN** marking A:
– Add brake fluid for the rear brake. (p. 131)

14.8 Adding brake fluid for the rear brake

WARNING
Danger of accidents Brake fluid which is too old or of the wrong type impairs the function of the brake system.
– Make sure that brake fluid for the front and rear brake is changed in accordance with the service schedule.
– Make sure that only clean, approved brake fluid from a tightly sealed container is used.

WARNING
Danger of accidents An insufficient brake fluid level will cause the brake system to fail.
If the brake fluid level drops below the specified marking or the specified value, the brake system has a leak or the brake pads are worn down.
– Have the brake system checked and make sure that the problem has been eliminated before the vehicle is used again.

WARNING
Health hazard Brake fluid is a harmful substance.
– Keep brake fluid out of the reach of children.
– Wear suitable protective clothing and safety glasses.
– Do not allow brake fluid to come into contact with the skin, the eyes, or clothing.
– Consult a doctor immediately if brake fluid has been ingested.
– Rinse the affected area with plenty of water in the event of contact with the skin.
– Rinse eyes thoroughly with water immediately and consult a doctor if brake fluid comes into contact with the eyes.
– If brake fluid spills on to your clothing, change the clothing.

NOTE

Environmental hazard Hazardous substances cause environmental damage.

– Dispose of oils, grease, filters, fuel, cleaning agents, brake fluid, etc. correctly and in accordance with the applicable regulations.

Note

Avoid contact between brake fluid and painted parts. Brake fluid corrodes paint.

Preparatory work

– Check that the brake pads of the rear brake are secured. (p. 132)

Main work

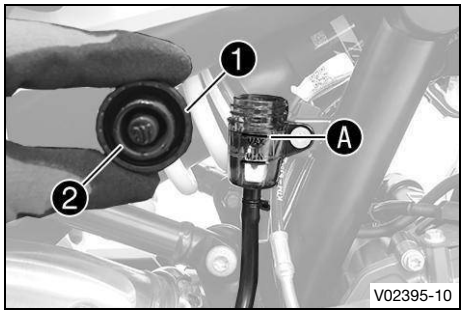

– Stand the vehicle upright.
– Remove screw cover ❶ with insert and membrane ❷.
– Add brake fluid up to the **MAX** marking Ⓐ.

Brake fluid DOT 5.1 (p. 200)

– Mount and tighten screw cover ❶ with the insert and membrane ❷.

Brake fluid reservoir cover, rear	
	1.5 Nm (1.11 ft·lb$_f$)

Immediately clean up any brake fluid that has overflowed or spilled using water.

14.9 Checking that the brake pads of the rear brake are secured

WARNING

Danger of accidents Worn brake pads reduce the brake action.

– Make sure that worn brake pads are replaced immediately.

WARNING

Danger of accidents Damaged brake discs reduce the braking action.

If the brake linings are not changed in time, the brake lining carriers grind against the brake disc. As a consequence, the brake action is greatly reduced and the brake discs are destroyed.

– Check the brake linings regularly.

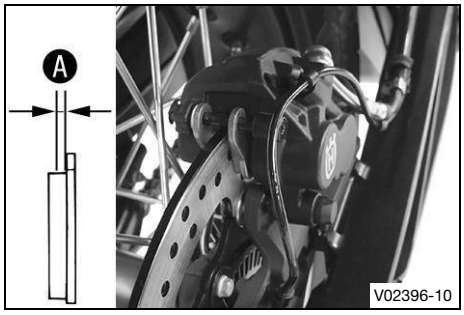

– Check the brake linings for minimum thickness Ⓐ.

Minimum pad thickness Ⓐ	≥ 1 mm (≥ 0.04 in)

» If the minimum thickness is less than specified:
  – Change the rear brake pads.

– Check the brake linings for damage and cracking.

» If there is damage or cracking:
  – Change the rear brake pads.

– Check that the brake pads are secured.
  » If the brake pads are not secured correctly:
    – Secure brake pads, replace with new parts if necessary.

15.1 Removing the front wheel

Preparatory work

(Norden 901)

- Raise the motorcycle with the rear lifting gear. (p. 96)
- Lift the motorcycle with the front lifting gear. (p. 96)

(Norden 901 Expedition)

- Raise the vehicle with the center stand. (p. 98)
- Place a load on the rear of the vehicle.
  - ✓ The front wheel is not in contact with the ground.

Main work

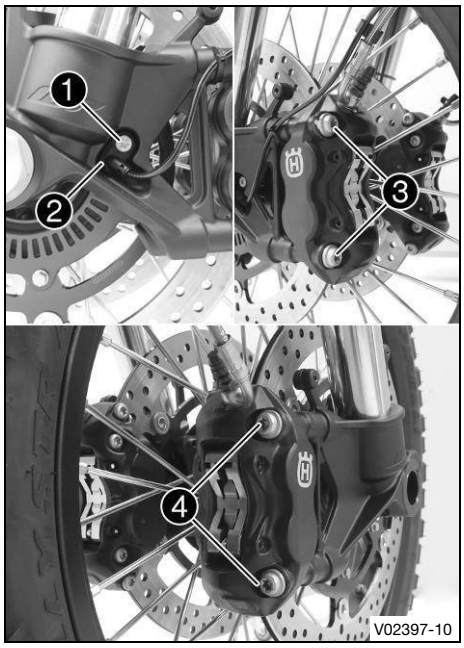

- Remove screw ❶ and pull wheel speed sensor ❷ out of the hole.
- Remove screws ❸ and ❹.
- Press back the brake linings by slightly tilting the left and right brake caliper laterally on the brake disc. Pull the left and right brake caliper carefully back from the brake disc and hang to the side.

Do not operate the hand brake lever if the brake calipers have been removed.

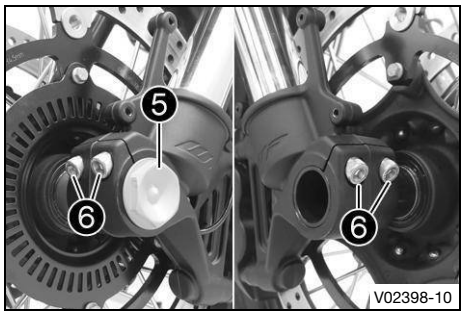

- Loosen screw ❺ by four turns.
- Loosen screws ❻.
- Press on screw ❺ to push the wheel spindle out of the fork shoe.
- Remove screw ❺.

WARNING

Danger of accidents Damaged brake discs reduce the braking action.

- Always lay the wheel down in such a way that the brake disc is not damaged.

- Hold front wheel and remove wheel spindle. Take the front wheel out of the fork.

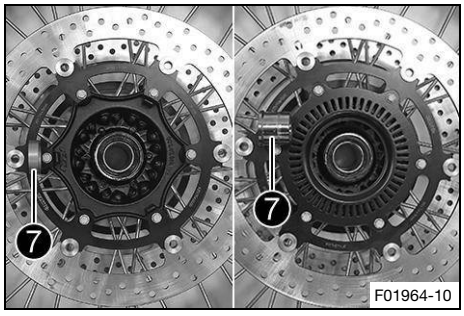

– Remove spacers ❼.

15.2 Installing the front wheel

WARNING
Danger of accidents Oil, grease or wax on the brake discs reduces the brake action.
– Always keep the brake discs free of oil, fat and wax.
– Clean the brake discs with brake cleaner when necessary.

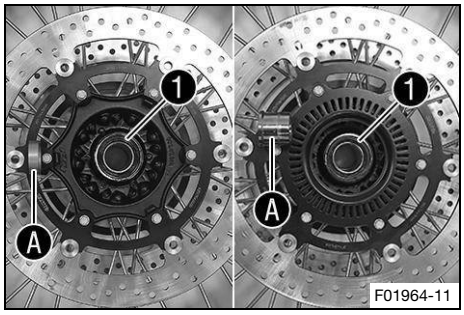

– Check the wheel bearing for damage and wear.
  » If the wheel bearings are damaged or worn:
    – Change the front wheel bearing.
– Clean and grease radial shaft seal ❶ and contact surfaces Ⓐ on the spacers.

Long-life grease (p. 199)

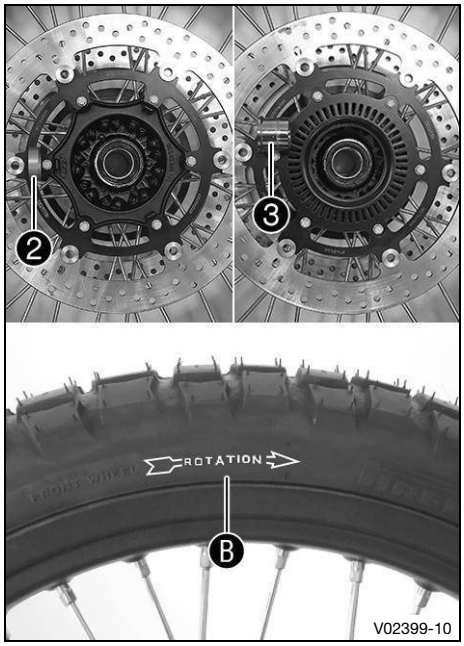

– Insert narrow spacer ❷ on the right in the direction of travel.
– Insert wide spacer ❸ on the left in the direction of travel.

Note
Arrow Ⓑ indicates the direction of travel of the front wheel.
The wheel speed sensor wheel is on the left viewed in the direction of travel.

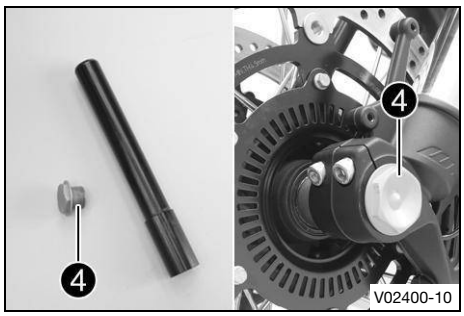

– Clean screw ❹ and the wheel spindle.
– Grease wheel spindle lightly.

Long-life grease (p. 199)

– Jack up the front wheel into the fork, position it, and insert the wheel spindle.
– Mount and tighten screw ❹.

Screw, wheel spindle, front	
M25×1.5	45 Nm (33.2 ft·lb$_f$) Long-life grease

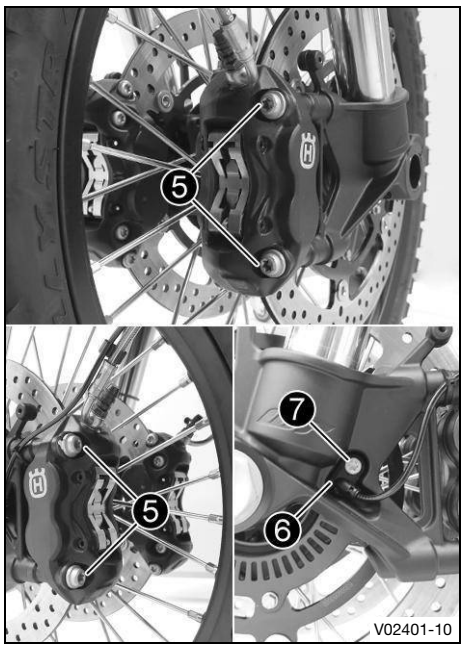

– Position both brake calipers.
  ✓ The brake linings are correctly positioned.
– Mount screws ❺ on both sides but do not tighten yet.

Screw, front brake caliper	
M10×1.25	45 Nm (33.2 ft·lb$_f$) **Loctite® 243**

– Operate the hand brake lever repeatedly until the brake pads are in contact with the brake disc and a pressure point is reached. Secure the hand brake lever in the activated position.
  ✓ The brake calipers straighten.
– Tighten screws ❺ on both sides.

Screw, front brake caliper	
M10×1.25	45 Nm (33.2 ft·lb$_f$) **Loctite® 243**

– Position wheel speed sensor ❻ in the hole.
– Mount and tighten screw ❼.

Screw, front wheel speed sensor	
M6	10 Nm (7.4 ft·lb$_f$)

– Remove the locking piece of the hand brake lever.

(Norden 901)

– Take the motorcycle off the front lifting gear. (p. 97)
– Remove the rear of the motorcycle from the lifting gear. (p. 96)

(Norden 901 Expedition)

– Remove the vehicle from the center stand. (p. 98)

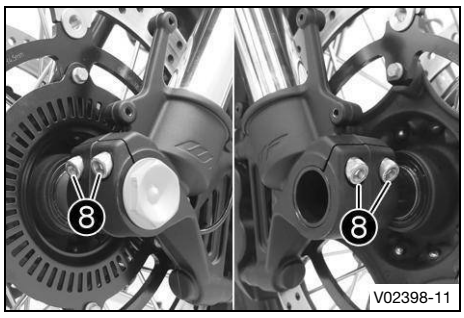

– Operate the front brake and compress the fork a few times firmly.
  ✓ The fork legs straighten.
– Tighten screws ❽.

Screw, fork shoe	
M8×20	15 Nm (11.1 ft·lb$_f$)

15.3 Removing the rear wheel

Preparatory work
(Norden 901 Expedition)

– Raise the vehicle with the center stand. (p. 98)
– Raise the motorcycle with the rear lifting gear. (p. 96)

Main work

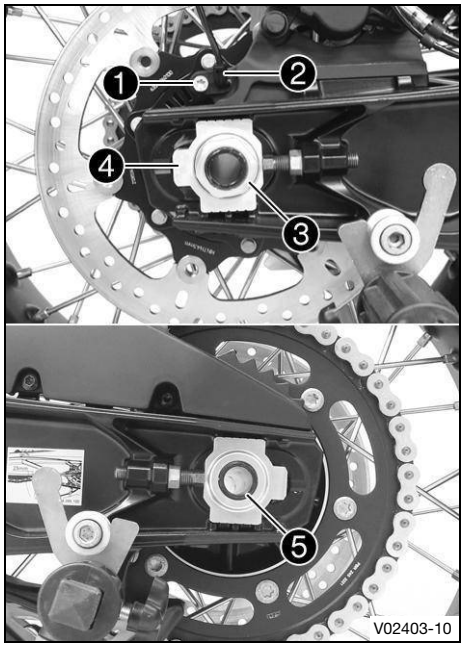

– Manually press the brake caliper toward the brake disc to push back the brake pistons.
– Remove screw ❶ and pull wheel speed sensor ❷ out of the hole.
– Remove nut ❸. Remove chain tension adjuster ❹.
– Pull out wheel spindle ❺ far enough to allow the rear wheel to be pushed forward.

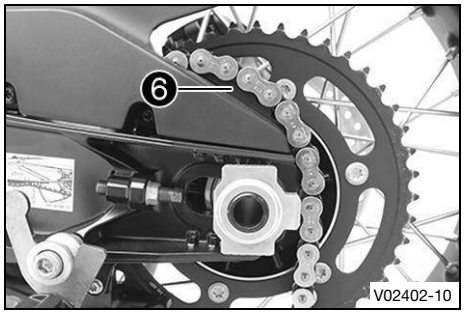

– Push the rear wheel forward as far as possible. Take the chain off the rear sprocket and place it on chain sprocket guard ❻.

Protect the components against damage by covering them.

– Hold the rear wheel and remove wheel spindle.
– Pull the rear wheel back until the brake caliper bracket is suspended freely between the brake disc and rim.

WARNING
Danger of accidents Damaged brake discs reduce the braking action.
– Always lay the wheel down in such a way that the brake disc is not damaged.

– Take the rear wheel out of the swingarm.

Do not actuate the brake pedal when the rear wheel is removed.

15.4 Installing the rear wheel

WARNING
Danger of accidents Oil, grease or wax on the brake discs reduces the brake action.
– Always keep the brake discs free of oil, fat and wax.
– Clean the brake discs with brake cleaner when necessary.

WARNING
Danger of accidents There is no braking effect to start with at the rear brake after installing the rear wheel.
– Actuate the foot brake several times before going on a ride until you can feel a firm pressure point.

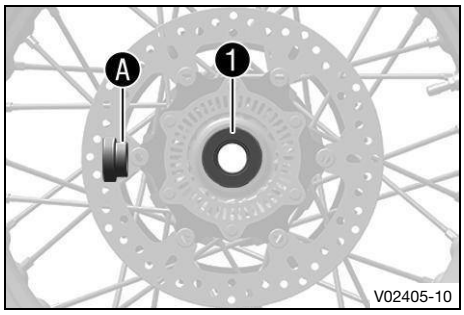

Main work

– Check the rear hub damping rubber pieces. (p. 139)
– Check the wheel bearing for damage and wear.
  » If the wheel bearings are damaged or worn:
    – Change the rear wheel bearing.
– Remove spacer.
– Clean and grease shaft seal ring 1 and contact surface A of the spacer.

  Long-life grease (p. 199)

– Insert a spacer.
– Clean and grease the thread of the wheel spindle and nut.

  Long-life grease (p. 199)

– Clean and lightly grease the wheel spindle.

  Long-life grease (p. 199)

– Clean the contact areas on the brake caliper bracket and link fork.

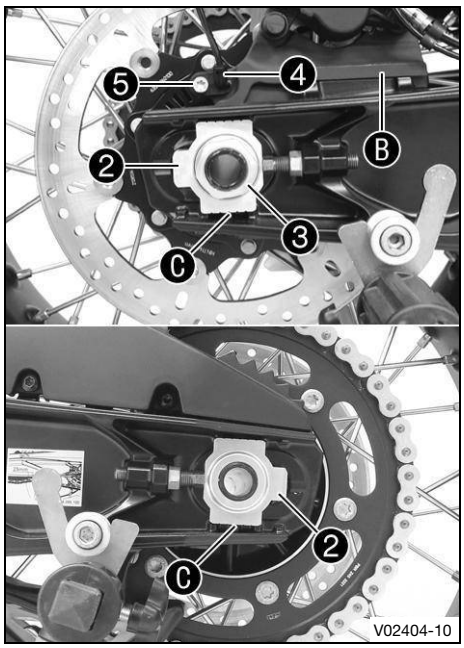

– Engage the thrust bearing of brake caliper bracket Ⓑ and the link fork.
– Jack up the rear wheel into the link fork, position it, and insert the wheel spindle.
  ✓ The brake pads are positioned correctly.
– Place the chain on the sprocket.
– Position chain adjuster ❷.
– Mount nut ❸, but do not tighten yet.

Mount the left and right chain adjusters in the same position.

– Make sure that chain adjusters ❷ are fitted correctly on the adjusting screws.
– Tighten nut ❸.

In order for the rear wheel to be correctly aligned, the markings on the left and right chain adjusters must be in the same position relative to reference markings Ⓒ.

Nut, wheel spindle, rear	
M25×1.5	90 Nm (66.4 ft·lb$_f$) Long-life grease

– Position wheel speed sensor ❹ in the hole.
– Mount and tighten screw ❺.

Screw, rear wheel speed sensor	
M6×16	6 Nm (4.4 ft·lb$_f$)

– Actuate the brake disc repeatedly until the brake pads are in contact with the brake disc and a pressure point is achieved.

Reworking

– Check the chain tension. (p. 101)
– Remove the rear of the motorcycle from the lifting gear. (p. 96)

(Norden 901 Expedition)

– Remove the vehicle from the center stand. (p. 98)

15.5 Checking the rear hub damping rubber pieces

Note

The engine power is transmitted from the rear sprocket to the rear wheel via the 6 damping rubber pieces. These wear out during operation. If the damping rubber pieces are not changed in time, the rear sprocket carrier and the rear hub will be damaged.

Preparatory work
(Norden 901 Expedition)

- Raise the vehicle with the center stand. (p. 98)
- Raise the motorcycle with the rear lifting gear. (p. 96)
- Remove the rear wheel. (p. 137)

Main work

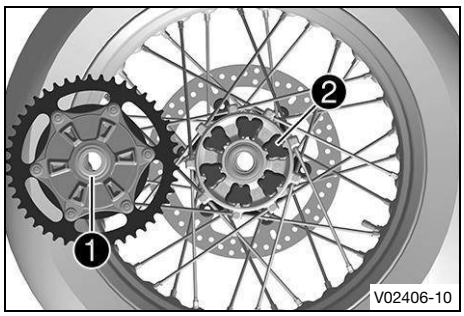

- Check bearing 1.
  - » If the bearing is damaged or worn:
    - Change the bearing of the rear sprocket carrier.
- Check damping rubber pieces 2 of the rear hub for damage and wear.
  - » If the damping rubber pieces of the rear hub are damaged or worn:
    - Change all the damping rubber pieces of the rear hub.

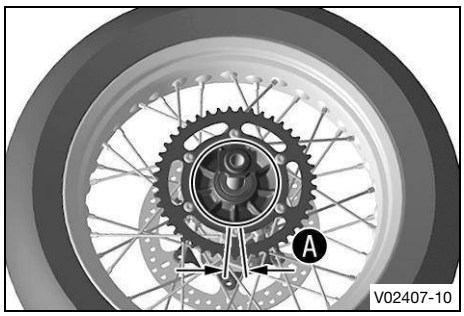

- Lay the rear wheel on a workbench with the rear sprocket facing upwards and insert the wheel spindle in the hub.
- To check play A, hold the rear wheel tight and try to turn the rear sprocket with your hand.

Measure the play on the outside of the rear sprocket.	
Play of damping rubber pieces on rear wheel	≤ 5 mm (≤ 0.20 in)

  - » If clearance A is larger than the specified value:
    - Change all the damping rubber pieces of the rear hub.

Reworking

- Install the rear wheel. (p. 138)
- Check the chain tension. (p. 101)
- Remove the rear of the motorcycle from the lifting gear. (p. 96)

(Norden 901 Expedition)

- Remove the vehicle from the center stand. (p. 98)

15.6 Checking the tire condition

WARNING
Danger of accidents If a tire bursts while riding, the vehicle becomes uncontrollable.
- Ensure that damaged or worn tires are replaced immediately.

WARNING
Danger of accidents Non-approved or non-recommended tyres and wheels impact the handling characteristic.
- Only use tires and wheels approved and recommended by the vehicle manufacturer with the corresponding speed rating.

WARNING

Danger of accidents New tires have reduced road grip.

The contact surface on new tires is not yet roughened.

– Run in new tires with moderate riding and only gradually increase the lean angle.

Run-in distance	200 km (124.3 mi)

WARNING

Danger of accidents Different tire profiles on the front and rear wheels can make it more difficult to control the vehicle.

– Make sure that only tires of the same tread type are mounted to the front and rear wheel.

Note

Tire type, tire condition, and tire pressure influence the braking and handling characteristics of the vehicle. Worn tires have a negative effect on handling characteristics, especially on wet surfaces.

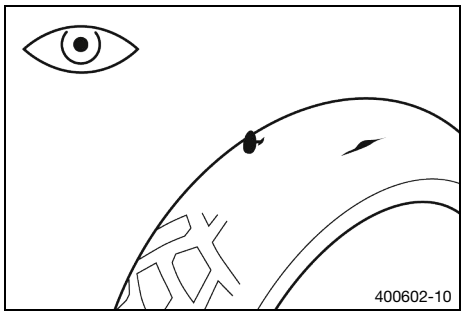

– Check the front and rear tires for cuts, embedded objects, and other damage.
  » If the tires have cuts, run-in objects, or other damage:
    – Change the tires.
– Check the tread depth.

Minimum tread depth	≥ 2 mm (≥ 0.08 in)

Note

Observe the minimum tread depth required by national law.

» If the tread depth is less than the minimum tread depth:
  – Change the tires.

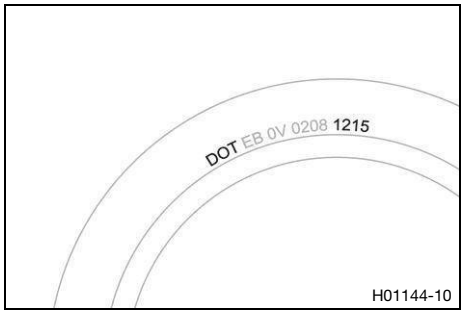

– Check the tire age.

Note

The tire date of manufacture is usually contained in the tire label and is indicated by the last four digits of the **DOT** number. The first two digits indicate the week of manufacture and the last two digits the year of manufacture.

Husqvarna Mobility recommends changing the tires, regardless of the actual wear, after 5 years at the latest.

» If the tires are older than five years:
  – Change the tires.

15.7 Checking the tire pressure

Note
Low tire pressure leads to abnormal wear and the tire overheating.
Correct tire pressure ensures optimal riding comfort and maximum tire service life.

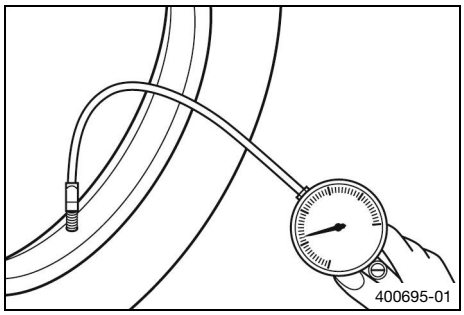

– Remove the protection cap.
– Check the tire pressure when the tires are cold.

Tire pressure when solo	
front	2.4 bar (34.8 psi)
rear	2.4 bar (34.8 psi)

Off-road tire pressure	
front	1.8 bar (26.1 psi)
rear	1.8 bar (26.1 psi)

Tire pressure with full payload / passenger	
front	2.6 bar (37.7 psi)
rear	2.6 bar (37.7 psi)

» If the tire pressure does not meet specifications:
  – Correct tire pressure.
– Mount the protection cap.

15.8 Checking the spoke tension

WARNING
Danger of accidents Incorrectly tensioned spokes impair the handling characteristic and can result in secondary damage.
If the spokes are too tight, they can break due to being overloaded.
Loose spokes can cause lateral or radial run-out in the wheel and other spokes will loosen as a result.
– Check the spoke tension regularly, especially on a new vehicle.

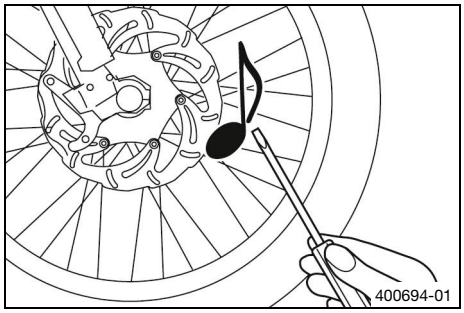

– Briefly tap each spoke with a screwdriver.

You should hear a high-pitched sound.

Note

The frequency of the sound depends on the spoke length and spoke diameter.

If spokes of the same length and diameter vibrate with a different tone, this is an indication that the spoke tensions differ.

» If the spoke tension differs:
  – Correct the spoke tension.

15.9 Tubeless tire system

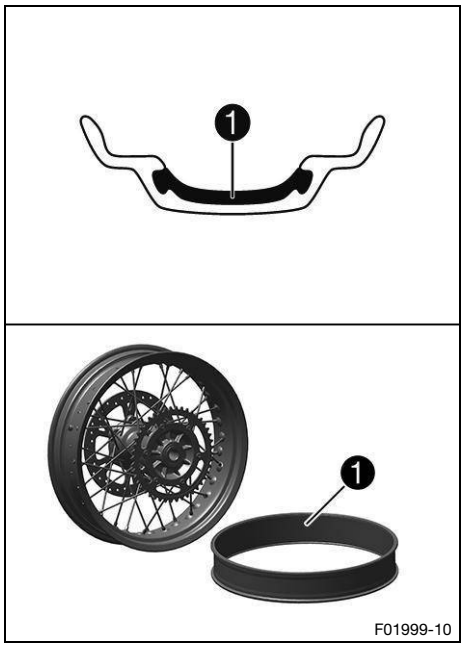

This vehicle uses a tubeless tire system in which a rim seal band ❶ is used instead of the conventional tube.

The advantage of the tubeless system is that there is no danger of a faulty tube. This greatly reduces the risk of a sudden loss in pressure.

The moments of inertia of these wheels are smaller than in conventional spoked wheels with a tube. This results in better handling and riding comfort.

The rigid rim design results in a wire spoke wheel that is almost entirely maintenance-free.

Husqvarna Mobility recommends that the rim rubber seal is changed after 5 years at the latest, regardless of the actual state of wear.

15.10 Using tire repair spray

WARNING

Danger of accidents Incorrect use of tire repair spray will result in the repaired tire losing pressure.

Tire repair spray cannot be used for all types of damage.

– Observe the instructions and specifications of the manufacturer of the tire repair spray.
– After repairing a tire with tire repair spray, ride slowly and carefully.
– Ride no further than the nearest authorized dealer and have the tire replaced.

NOTE

Material damage Tire repair spray damages the tire pressure sensor.

– Note that after using tire repair spray, the tire pressure sensor may need to be replaced.

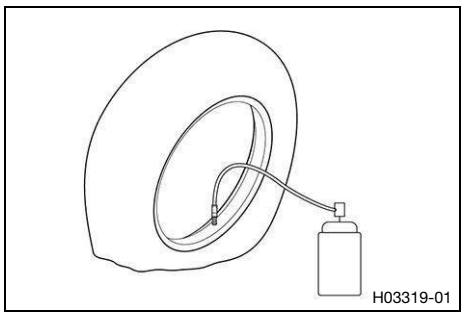

WARNING

Danger of accidents Incorrect use of tire repair spray will result in the repaired tire losing pressure.

Tire repair spray cannot be used for all types of damage.

- Observe the instructions and specifications of the manufacturer of the tire repair spray.
- After repairing a tire with tire repair spray, ride slowly and carefully.
- Ride no further than the nearest authorized dealer and have the tire replaced.

Tire repair spray should only be used in an emergency.

Transporting the broken-down vehicle to the nearest authorized dealer is recommended instead of repairing it.

16.1 Removing the 12 V battery

WARNING

Danger of accidents Electronic components and safety devices will be damaged if the 12-V battery is discharged or missing.

If the 12-V battery is discharged or defective, malfunctions in the vehicle electronics can occur, especially when starting.

– Never operate the vehicle with a discharged 12-V battery or without a 12-V battery.

WARNING

Risk of injury Battery acid and battery gases cause chemical burns.

– Keep 12-V batteries out of the reach of children.
– Wear suitable protective clothing and safety glasses.
– Avoid contact with battery acid and battery gases.
– Keep sparks or open flames away from the 12 V battery.
– Only charge 12 V batteries in well-ventilated rooms.
– Rinse the affected area immediately with plenty of water in the event of contact with skin.
– Rinse eyes with water for at least 15 minutes and consult a doctor immediately if battery acid and battery gases get into the eyes.

Preparatory work

– Remove the passenger seat. (p. 99)
– Remove the front rider's seat. (p. 99)
– Remove the battery cover. (p. 113)

Main work

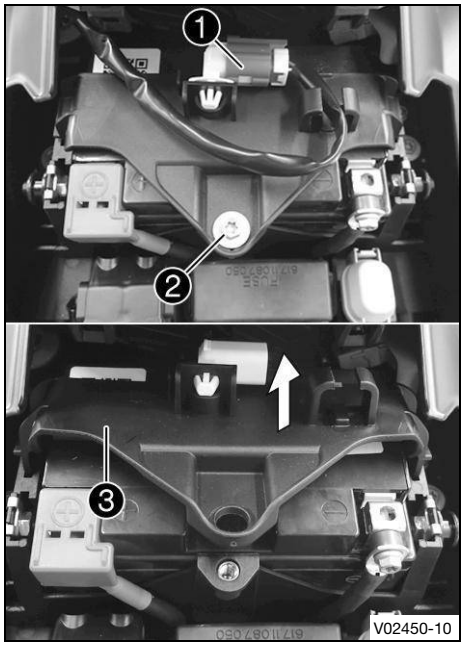

– Pull the diagnostics connector ❶ out of the bracket and hang to the side.
– Remove screw ❷.
– Raise the battery mounting element ❸ at the rear and remove in upward direction.

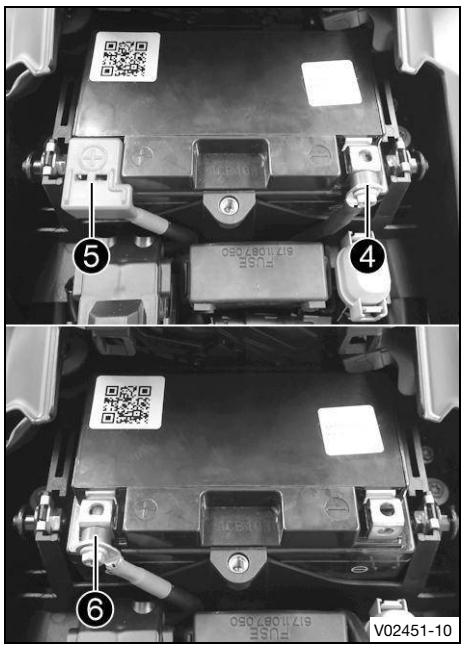

– Disconnect negative cable ❹ from the 12 V battery.
– Remove positive terminal cover ❺.
– Disconnect positive cable ❻ from the 12-V battery.
– Pull the 12-V battery upwards and out of the battery compartment.

16.2 Installing the 12 V battery

WARNING
Danger of accidents Electronic components and safety devices will be damaged if the 12-V battery is discharged or missing.
If the 12-V battery is discharged or defective, malfunctions in the vehicle electronics can occur, especially when starting.
– Never operate the vehicle with a discharged 12-V battery or without a 12-V battery.

WARNING
Risk of injury Battery acid and battery gases cause chemical burns.
– Keep 12-V batteries out of the reach of children.
– Wear suitable protective clothing and safety glasses.
– Avoid contact with battery acid and battery gases.
– Keep sparks or open flames away from the 12 V battery.
– Only charge 12 V batteries in well-ventilated rooms.
– Rinse the affected area immediately with plenty of water in the event of contact with skin.
– Rinse eyes with water for at least 15 minutes and consult a doctor immediately if battery acid and battery gases get into the eyes.

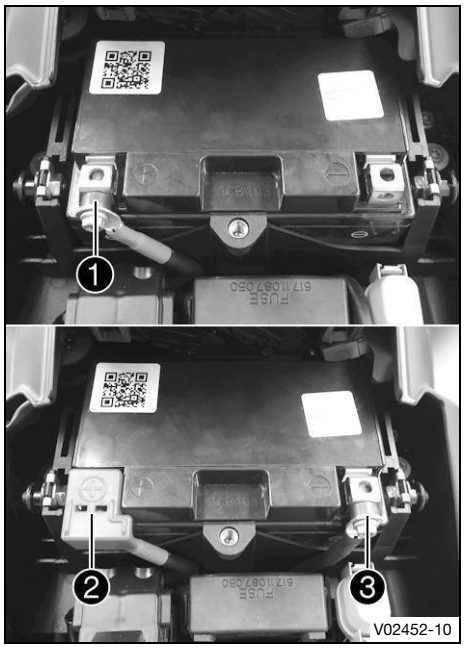

Main work

– Position the 12-V battery in the battery compartment.

12 V battery (HTZ12A-BS) (p. 201)

✓ The battery terminals face opposite the direction of travel.

– Connect positive cable ❶ to the 12 V battery.

Screw, battery terminal	
M6×20	4.5 Nm (3.32 ft·lb$_f$)

– Mount positive terminal cover ❷.

– Connect negative cable ❸ to the 12 V battery.

Screw, battery terminal	
M6×20	4.5 Nm (3.32 ft·lb$_f$)

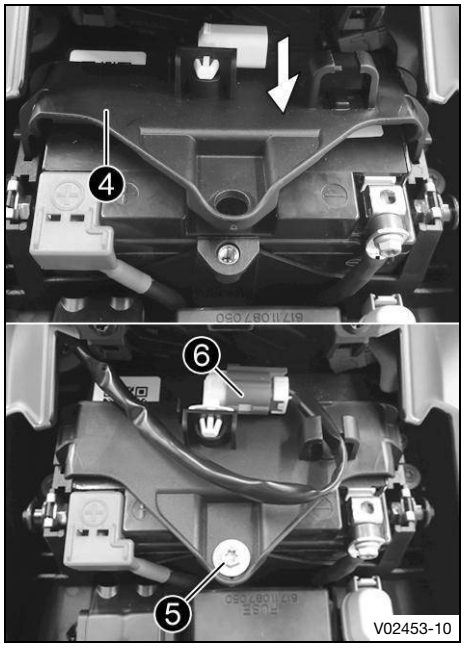

– Hang battery holding bracket ❹ to the left and right in the holding lugs and push downward at the rear.

– Mount and tighten screw ❺.

Screw, battery holding bracket	
M6×12	4.5 Nm (3.32 ft·lb$_f$)

– Position the diagnostics connector ❻ in the holder.

Reworking

– Install the battery cover. (p. 113)

– Mount the front rider's seat. (p. 100)

– Mount the passenger seat. (p. 99)

– Set time and date. (p. 66)

16.3 Charging the 12 V battery

WARNING

Risk of injury Battery acid and battery gases cause chemical burns.

- Keep 12-V batteries out of the reach of children.
- Wear suitable protective clothing and safety glasses.
- Avoid contact with battery acid and battery gases.
- Keep sparks or open flames away from the 12 V battery.
- Only charge 12 V batteries in well-ventilated rooms.
- Rinse the affected area immediately with plenty of water in the event of contact with skin.
- Rinse eyes with water for at least 15 minutes and consult a doctor immediately if battery acid and battery gases get into the eyes.

NOTE

Environmental hazard 12-V batteries contain environmentally-hazardous materials.

- Do not dispose of 12-V batteries as household waste.
- Dispose of 12-V batteries at a collection point for used batteries.

NOTE

Environmental hazard Hazardous substances cause environmental damage.

- Dispose of oils, grease, filters, fuel, cleaning agents, brake fluid, etc. correctly and in accordance with the applicable regulations.

Note

Even when there is no load on the 12 V battery, it discharges steadily each day.

The state of charge and the method of charging are very important for the service life of the 12 V battery.

Rapid recharging with a high charging current shortens the service life of the battery.

If the charging current, charging voltage, or charging time is exceeded, electrolyte escapes through the safety valves. This reduces the capacity of the 12-V battery.

If the 12-V battery is left in a discharged state for an extended period, it will become deeply discharged and sulfating occurs, destroying the battery.

The 12 V battery is maintenance-free. The acid level does not have to be checked.

Preparatory work

- Remove the passenger seat. (p. 99)
- Remove the front rider's seat. (p. 99)
- Remove the battery cover. (p. 113)

Main work

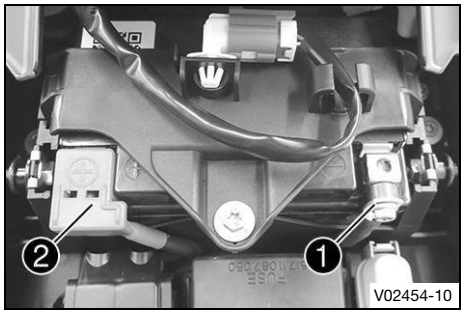

- Disconnect negative cable ❶ from the 12 V battery to avoid damaging the onboard electronics.
- Remove positive terminal cover ❷.

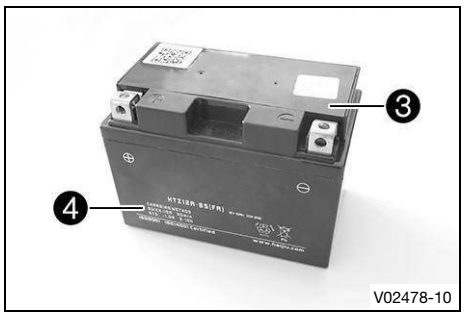

– Connect a charger to the 12 V battery. Switch the charger on.

The battery charger must be suitable for the 12-V battery.
Do not remove cover ❸.
Charge the 12-V battery to a maximum of 10% of the capacity specified on battery housing ❹.

– Switch off the charger after charging and disconnect from the 12 V battery.

The charging current, charging voltage, and charging time must not be exceeded.	
If the 12 V battery is depleted from starting the vehicle repeatedly, the battery must be charged immediately.	
Recharge the 12 V battery regularly when the motorcycle is not being used.	3 months

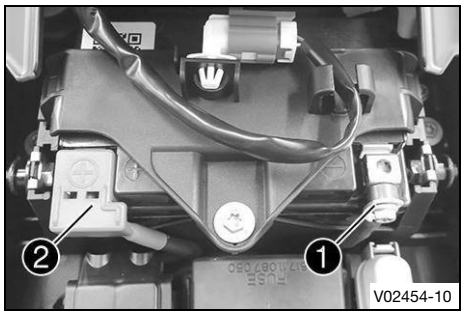

– Mount positive terminal cover ❷.
– Connect negative cable ❶ to the 12 V battery.

Screw, battery terminal	
M6×20	4.5 Nm (3.32 ft·lb$_f$)

Reworking

– Install the battery cover. (p. 113)
– Mount the front rider's seat. (p. 100)
– Mount the passenger seat. (p. 99)
– Set time and date. (p. 66)

16.4 Changing the main fuse

WARNING

Fire hazard Incorrect fuses overload the electrical system.

– Use only fuses with the prescribed amperage.
– Do not bypass or repair fuses.

Note

The main fuse protects all electrical power loads of the vehicle. The main fuse is under the front rider's seat.

Preparatory work

– Remove the passenger seat. (p. 99)
– Remove the front rider's seat. (p. 99)

Main work

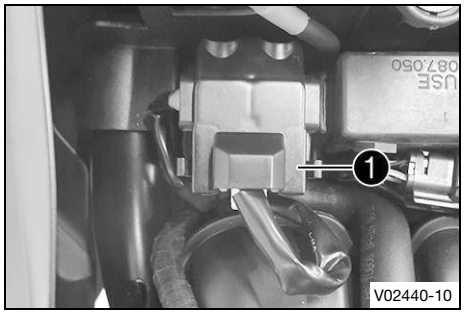

– Remove protection cap ❶.

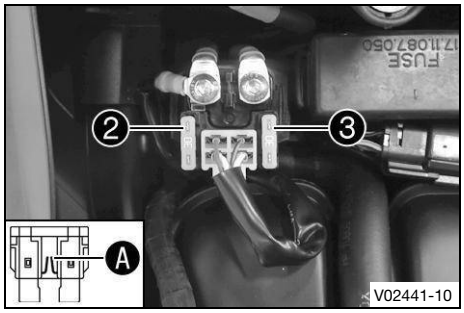

– Remove faulty main fuse ❷.

> **Note**
> A faulty fuse has a burned-out fuse wire Ⓐ.
> A spare fuse ❸ is located in the starter relay.

– Insert the main fuse.

Fuse (58011109130) (p. 202)

> **Tip**
> Insert a new spare fuse into the starter relay to have it available when needed.

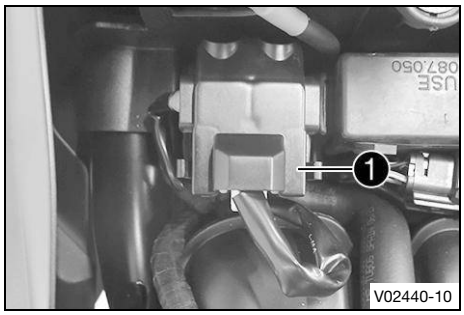

– Mount protection cap ❶.

Reworking

– Mount the front rider's seat. (p. 100)
– Mount the passenger seat. (p. 99)
– Set time and date. (p. 66)

16.5 Changing the ABS fuses

> **WARNING**
> **Fire hazard** Incorrect fuses overload the electrical system.
> – Use only fuses with the prescribed amperage.
> – Do not bypass or repair fuses.

Note
Two fuses for the ABS are located under the front rider's seat. These fuses protect the return pump and the hydraulic unit of the ABS. The third fuse, which protects the ABS control unit, is located in the fuse box.

Preparatory work

– Remove the passenger seat. (p. 99)
– Remove the front rider's seat. (p. 99)

Main work

– Select one of the following alternatives.

Changing the fuse of the ABS hydraulic unit

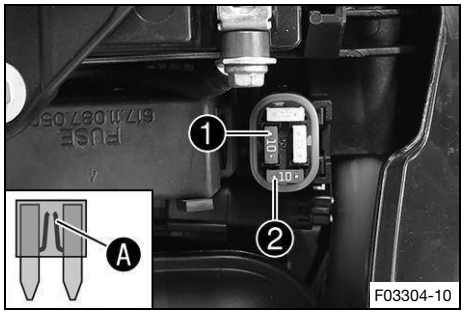

– Remove the protection cap and fuse ❶.

Note
A faulty fuse has a burned-out fuse wire Ⓐ.

– Insert the spare fuse with the correct rating.

Fuse (75011088010) (p. 201)

Tip
Insert spare fuse ❷ in the fuse box so that it is available if needed.

– Mount the protection cap.

Changing the fuse of the ABS return pump

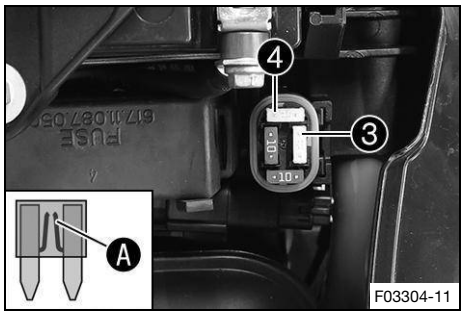

– Remove the protection cap and fuse ❸.

Note
A faulty fuse has a burned-out fuse wire Ⓐ.

– Insert the spare fuse with the correct rating.

Fuse (75011088025) (p. 202)

Tip
Insert spare fuse ❹ in the fuse box so that it is available if needed.

– Mount the protection cap.

Reworking

– Mount the front rider's seat. (p. 100)
– Mount the passenger seat. (p. 99)

16.6 Changing the fuses of individual electrical power consumers

WARNING
Fire hazard Incorrect fuses overload the electrical system.
– Use only fuses with the prescribed amperage.
– Do not bypass or repair fuses.

Note
The fuse box containing the fuses of individual electrical power consumers is located under the rider's seat.

Preparatory work
– Remove the passenger seat. (p. 99)
– Remove the front rider's seat. (p. 99)

Main work

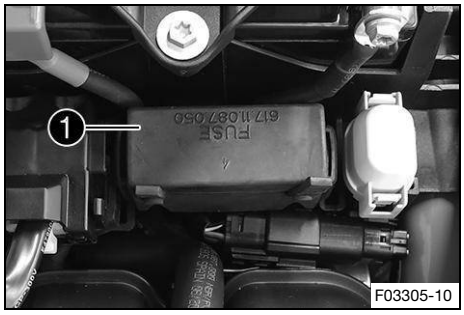

– Open fuse box cover 1.

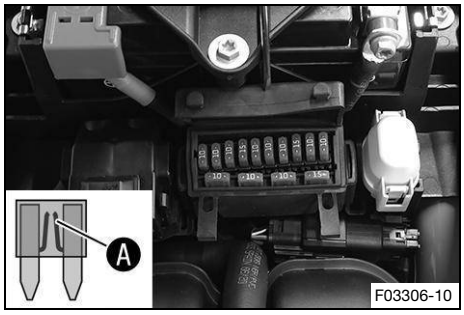

– Remove the faulty fuse.

Fuse **1** - 10 A - ignition, alarm system (optional)
Fuse **2** - 10 A - ignition, engine control unit, electronic fuel injection, fuel vapor retention system, lambda sensor, immobilizer
Fuse **3** - 10 A - fuel pump
Fuse **4** - 15 A - radiator fan
Fuse **5** - 10 A - horn, combination instrument, brake light
Fuse **6** - 10 A - high beam, low beam, position light, tail light, license plate lamp
Fuse **7** - 10 A - ACC1
Fuse **8** - 15 A - ACC2, USB charging socket, supplementary headlight, HCU (optional)
Fuse **9** - 10 A - ABS control unit, diagnostics connector, 6D sensor, TPMS (function optional)
Fuse **SPARE** - 10 A – spare fuses
Fuse **SPARE** - 15 A – spare fuses

Note
A faulty fuse has a burned-out fuse wire A.

– Insert the spare fuse with the correct rating.

Fuse (75011088010) (p. 201)

Fuse (75011088015) (p. 202)

Tip
Put a spare fuse in the fuse box so that it is available if needed.

– Check the function of the electrical power consumers.
– Close the fuse box cover.

Reworking

– Mount the front rider's seat. (p. 100)
– Mount the passenger seat. (p. 99)

16.7 Checking the headlight setting

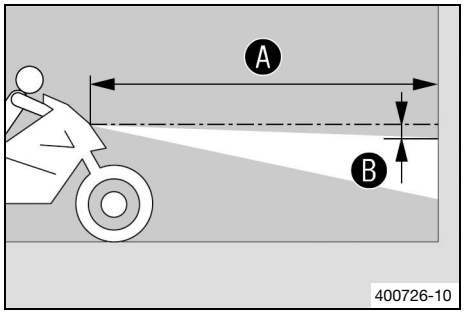

– Park the vehicle on a horizontal surface in front of a light-colored wall and make a mark at the height of the center of the low beam headlight.
– Make another mark at a distance B under the first marking.

Distance B	5 cm (2.0 in)

– Position the vehicle upright at distance A from the wall and switch on the low beam.

Distance A	5 m (16 ft – 5 in)

– Get on the motorcycle, together with any luggage or passenger.
– Check the headlight adjustment.

The light-dark boundary must lie exactly on the lower marking when the motorcycle is ready to operate with the rider mounted along with any luggage and a passenger if applicable.

» If the boundary between light and dark does not meet specifications:
  – Adjust headlight range. (p. 153)

16.8 Adjusting the headlight range

Preparatory work

– Check the headlight adjustment. (p. 153)

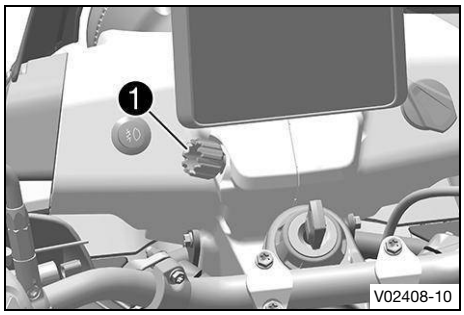

Main work

– Turn adjusting wheel ❶ to adjust the headlight range.

> **Note**
> Turn clockwise to reduce the headlight range; turn counterclockwise to increase the headlight range.
> If you have a load, you may have to correct the headlight range.

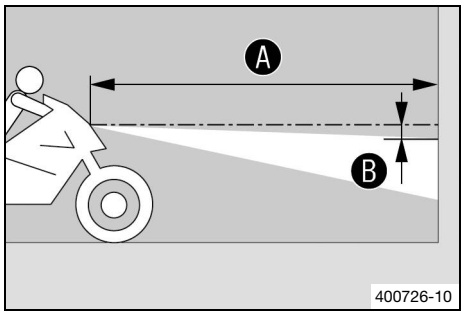

– Set the headlight to marking Ⓑ.

The light-dark boundary must lie exactly on the lower marking Ⓑ when the motorcycle is ready to operate with the rider mounted along with any luggage and a passenger if applicable.

16.9 Checking the supplementary headlight setting

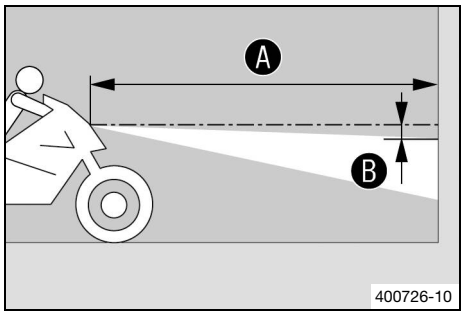

– Park the vehicle on a horizontal surface in front of a light-colored wall and make a mark at the height of the center of the low beam headlight.
– Make another mark at a distance Ⓑ under the first marking.

Distance Ⓑ	5 cm (2.0 in)

– Position the vehicle upright at distance Ⓐ from the wall and switch on the supplementary headlight.

Distance Ⓐ	5 m (16 ft – 5 in)

– Get on the motorcycle, together with any luggage or passenger.
– Check the headlight adjustment.

The light-dark boundary must lie exactly on the lower marking when the motorcycle is ready to operate with the rider mounted along with any luggage and a passenger if applicable.

» If the boundary between light and dark does not meet specifications:
  – Adjust the supplementary headlight range.
  (p. 155)

16.10 Adjusting the supplementary headlight range

Preparatory work

– Check the supplementary headlight setting. (p. 154)

Main work

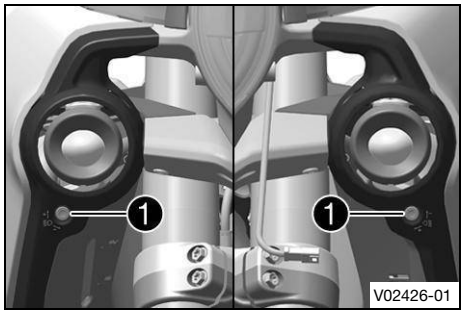

– Use adjusting screws ❶ to adjust the supplementary headlight range.

> **Note**
> Turn clockwise to increase the headlight range; turn counterclockwise to reduce the headlight range.
> If you have a load, you may have to correct the headlight range of the auxiliary headlights.

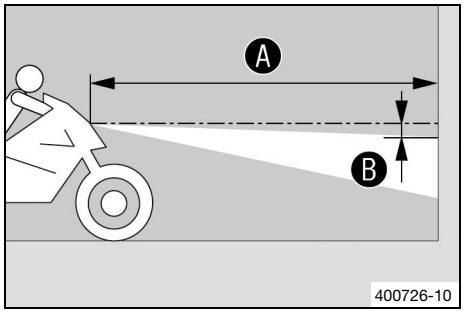

– Set the headlight to marking Ⓑ.

Comply with country-specific specifications.
The light-dark boundary must lie exactly on lower marking Ⓑ when the motorcycle is ready to operate with the rider mounted along with any luggage and a passenger, if applicable.

– Adjust the supplementary headlight range equally on both sides.

16.11 Diagnostic connector

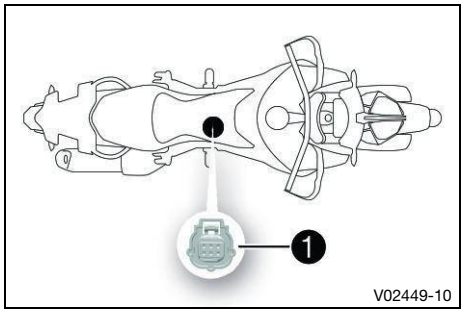

Diagnostics connector ❶ is located under the battery cover.

16.12 Front ACC1 and ACC2

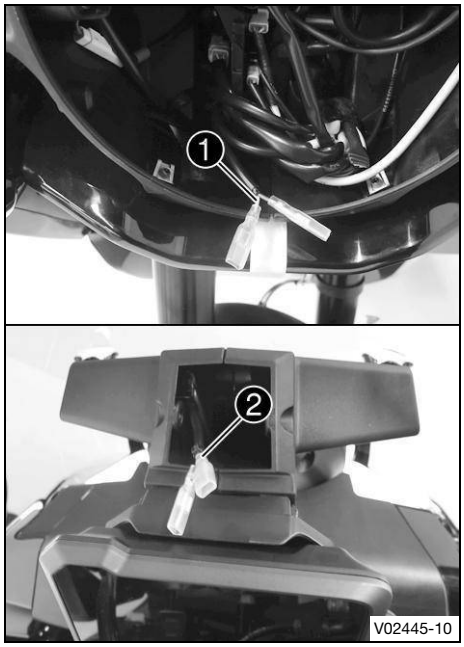

Installation location

- The front power supply ACC1 ❶ is located behind the headlight.

  The front power supply ACC2 ❷ is located behind the mask support cover.

Note

The power supplies are protected by a fuse; however, this fuse also protects other electrical power consumers.

The maximum continuous load is therefore significantly lower than the value of the fuse.

Do not use a stronger fuse.

The power supply ACC1 is switched to permanent positive; connected power consumers are permanently supplied with current, regardless of ignition.

The power supply ACC2 is switched to ignition plus; connected power consumers are only supplied with power when the ignition is switched on.

16.13 Rear ACC1 and ACC2

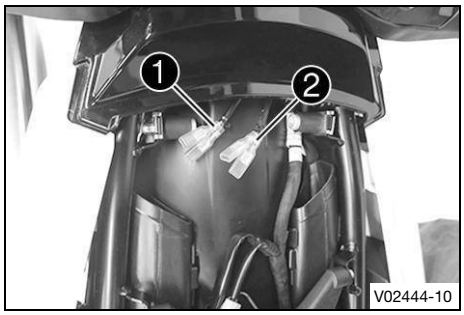

Installation location

- The rear power supplies ACC1 ❶ and ACC2 ❷ are located under the passenger seat.

Note

The cable insulation label indicates the type of power supply.

Note

The power supplies are protected by a fuse; however, this fuse also protects other electrical power consumers.

The maximum continuous load is therefore significantly lower than the value of the fuse.

Do not use a stronger fuse.

The power supply ACC1 is switched to permanent positive; connected power consumers are permanently supplied with current, regardless of ignition.

The power supply ACC2 is switched to ignition plus; connected power consumers are only supplied with power when the ignition is switched on.

17.1 Cooling system

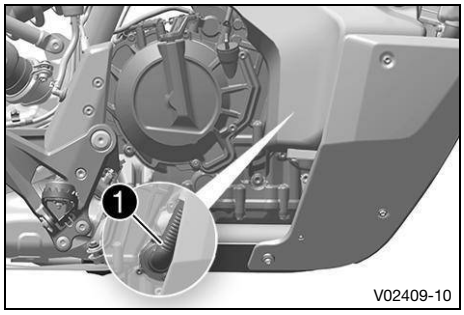

Water pump ❶ in the engine circulates the coolant.
The pressure resulting from the warming of the cooling system is regulated by a valve in radiator cap ❷. Heat expansion causes excess coolant to flow into compensating tank ❸. When the temperature falls, this surplus coolant is sucked back into the cooling system. This ensures that operating the vehicle at the specified coolant temperature will not result in a risk of malfunctions.

115 °C (239.0 °F)

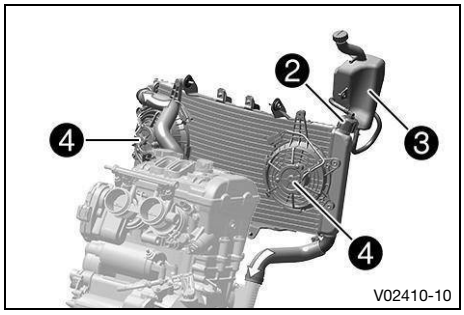

The coolant is cooled by the air stream and two radiator fans ❹, which are activated at high temperature.
The lower the vehicle speed, the lower the cooling effect. Dirty cooling fins also reduce the cooling effect.

17.2 Checking the coolant level in the compensating tank

WARNING
Health hazard Coolant is harmful to health.
- Keep coolant out of the reach of children.
- Do not allow coolant to come into contact with skin, eyes, or clothing.
- Consult a doctor immediately if coolant has been ingested.
- Rinse the affected area immediately with plenty of water in the event of contact with skin.
- Rinse eyes thoroughly with water and consult a doctor immediately if coolant comes into contact with eyes.
- If coolant spills on to your clothing, change the clothing.
- Store coolant properly in a suitable container and keep out of the reach of children.

WARNING
Danger of scalding The coolant heats up and is under high pressure when the vehicle is operated.
- Do not open the radiator, the radiator hoses, or other cooling system components if the engine or the cooling system are at operating temperature.
- Allow the cooling system and the engine to cool down before you open the radiator, the radiator hoses, or other components of the cooling system.
- In the event of scalding, rinse the area affected immediately with lukewarm water.

Condition: The engine is cold, Radiator is completely full

- Park the motorcycle on a horizontal surface.

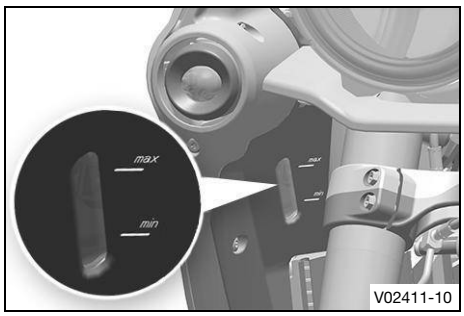

– Check the coolant level in the compensating tank.

The coolant level must be between **MIN** and **MAX**.

» If there is no coolant in the compensating tank:
  – Check the transmission and cooling system for leaks.

Do not start the motorcycle.

  – Fill/bleed the cooling system.

» If the coolant level in the reservoir is not correct, but the reservoir is not yet empty:
  – Correct the coolant level in the compensating tank. (p. 158)

17.3 Correcting the coolant level in the compensating tank

WARNING
Health hazard Coolant is harmful to health.
– Keep coolant out of the reach of children.
– Do not allow coolant to come into contact with skin, eyes, or clothing.
– Consult a doctor immediately if coolant has been ingested.
– Rinse the affected area immediately with plenty of water in the event of contact with skin.
– Rinse eyes thoroughly with water and consult a doctor immediately if coolant comes into contact with eyes.
– If coolant spills on to your clothing, change the clothing.
– Store coolant properly in a suitable container and keep out of the reach of children.

WARNING
Danger of scalding The coolant heats up and is under high pressure when the vehicle is operated.
– Do not open the radiator, the radiator hoses, or other cooling system components if the engine or the cooling system are at operating temperature.
– Allow the cooling system and the engine to cool down before you open the radiator, the radiator hoses, or other components of the cooling system.
– In the event of scalding, rinse the area affected immediately with lukewarm water.

Condition: The engine is cold, Radiator is completely full

Preparatory work
– Check the coolant level in the compensating tank. (p. 157)

Main work
– Remove compensating tank cover ❶.

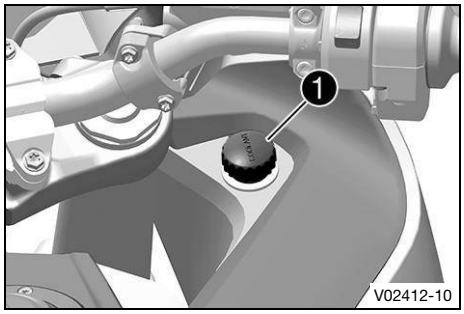

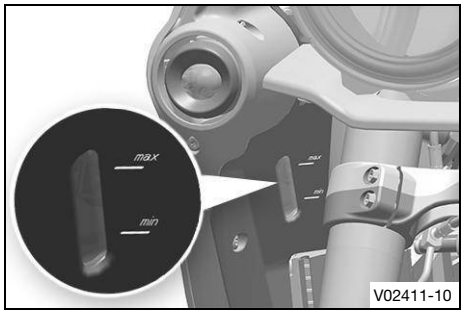

– Add coolant until the coolant reaches the specified level.

The coolant level must be between **MIN** and **MAX**.

coolant	
Coolant (p. 200) Antifreeze protection to at least: −25 °C (−13.0 °F)	1.60 l (0.423 liq. gal_{US})

– Mount cover ❶ of the compensating tank.

Compensating tank cover	
	1.1 Nm (0.81 $ft{\cdot}lb_f$)

18.1 Ride Mode

V02211-01

WARNING

Danger of accidents An incorrectly selected ride mode makes it more difficult to control the vehicle.

The riding modes are each only suitable for certain conditions.

– Always select a riding mode that suits the surface on which you are riding, the weather and the riding situation.

Various vehicle tunings can be selected in the dashboard in the **Ride Mode** submenu: **Street**, **Rain**, **Offroad** and **Explorer** (optional).

The most recently selected ride mode appears on the display.

The riding mode can also be changed while riding with the throttle grip closed.

18.2 Motorcycle traction control

V02213-01

The motorcycle traction control (**MTC**) lowers the engine torque in case of loss of traction in the rear wheel. Depending on the riding mode (p. 160), different amounts of slip are allowed when traction control is activated.

Note

When motorcycle traction control is switched off, the rear wheel may spin during strong acceleration and on surfaces with low grip, resulting in a risk of falling.

After the ignition is switched on, motorcycle traction control is enabled again.

In the combination instrument, the motorcycle traction control can be switched on or off via the **MTC** submenu.

Note

When the motorcycle traction control is active, the TC indicator lamp flashes.

When motorcycle traction control is switched off, the TC indicator lamp lights up.

18.3 slip adjustment (optional)

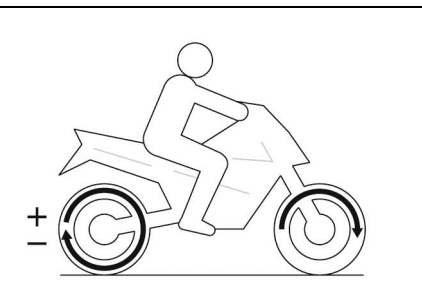

402790-01

The spin adjuster is a motorcycle traction control function.

The slip adjustment allows the motorcycle traction control to be tuned through nine levels to the desired characteristic map.

Level 1 allows the maximum slip on the rear wheel, and level 9 the minimum.

The slip adjustment can be set while riding with a closed menu using the **UP** or **DOWN** button.

Note

The slip adjustment is only available in **Explorer** riding mode (optional).

18.4 Throttle (optional)

V02216-01

Condition	Meaning
Street	Balanced response
Rally	Extremely direct response
Offroad	Gentle response.

In the combination instrument the characteristics of the throttle response can be adjusted via the **Throttle** submenu.

The **Throttle** can also be set while riding with a closed throttle grip.

Note

Throttle is only available in riding mode **Explorer** (optional).

19.1 Checking the engine oil level

Condition: The engine is at operating temperature

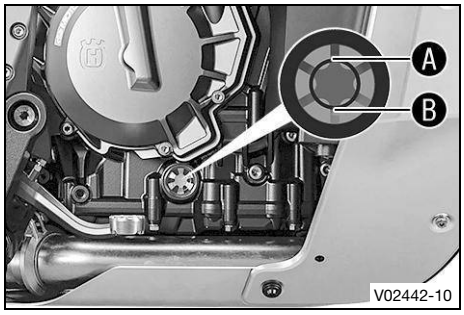

– Stand the motorcycle upright on a level surface.
– Check the engine oil level.

The engine oil must be between marking Ⓐ and marking Ⓑ of the oil level viewer.
After switching off the engine, wait one minute before checking the level.

» If the engine oil level is below the marking Ⓑ:
  – Add engine oil. (p. 164)
» If the engine oil level is above the marking Ⓐ:
  – Correct engine oil level.

19.2 Changing the engine oil and oil filter, cleaning the oil screens

WARNING

Danger of scalding Engine and gear oil heat up when the motorcycle is operated.
– Wear suitable protective clothing and safety gloves.
– In the event of scalding, rinse the area affected immediately with lukewarm water.

NOTE

Environmental hazard Hazardous substances cause environmental damage.
– Dispose of oils, grease, filters, fuel, cleaning agents, brake fluid, etc. correctly and in accordance with the applicable regulations.

Condition: The engine is at operating temperature

Preparatory work

– Remove the skid plate. (p. 122)

Main work

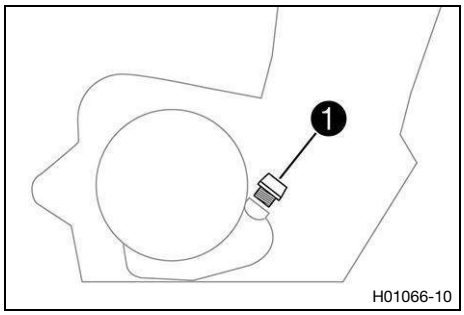

– Rest the motorcycle on its side stand on a horizontal surface.
– Position an appropriate container under the engine.
– Remove filler plug ❶ with the O-ring.

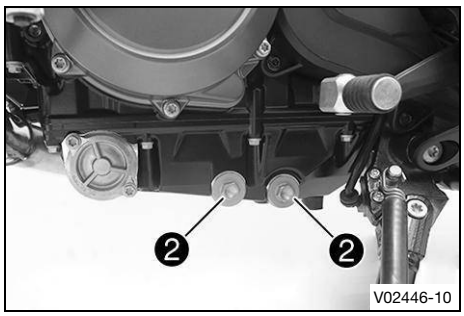

– Remove oil drain plugs ❷ along with the magnets, the O-rings, and the oil screens.

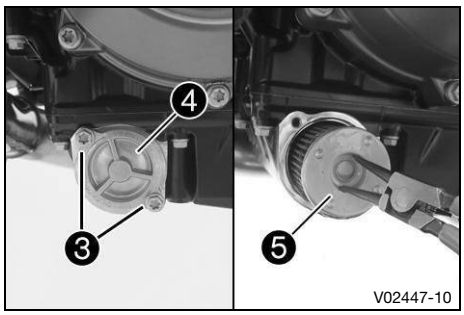

– Remove screws ❸.
– Take off oil filter cover ❹ with the O-ring.
– Pull oil filter ❺ out of the oil filter housing.

Lock ring plier (51012011000)

– Allow the engine oil to drain completely.
– Thoroughly clean the parts and the sealing surfaces.

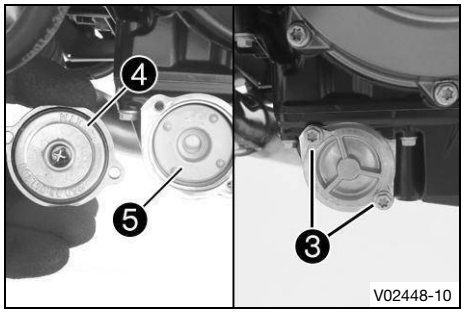

– Insert new oil filter ❺.

Only insert the oil filter by hand.

– Oil the new O-ring of the oil filter cover.
– Position oil filter cover ❹.
– Mount and tighten screws ❸.

Screw, oil filter cover	
M5	6 Nm (4.4 ft·lb$_f$)

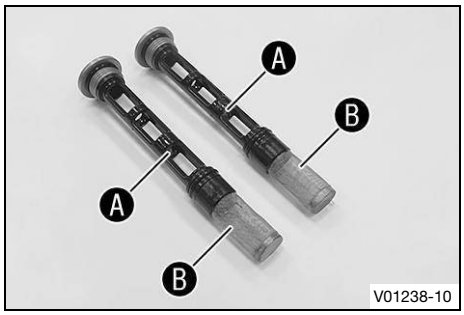

– Thoroughly clean magnets Ⓐ and oil screens Ⓑ of the oil drain plugs.

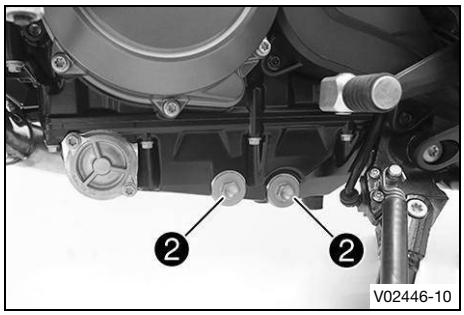

– Mount and tighten oil drain plugs ❷ with magnets, O-rings, and oil screens.

Plug, oil screen	
M20×1.5	20 Nm (14.8 ft·lb$_f$)

– Fill up with engine oil at the clutch cover.

engine oil	
engine oil (SAE 10W/50) 📖 (p. 199) fully synthetic	2.8 l (0.74 liq. gal$_{US}$)

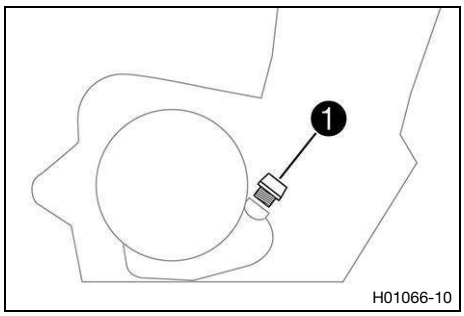

– Mount and tighten filler plug ❶ with the O-ring.

DANGER
Danger of poisoning Exhaust gases are toxic and inhaling them may result in unconsciousness and death.
– Always ensure that there is sufficient ventilation when running the engine.
– Use suitable exhaust extraction when starting or running the engine in an enclosed space.

– Start the engine and check it for leaks.

Reworking
– Check the engine oil level. (p. 162)
– Install the skid plate. (p. 124)

19.3 Adding engine oil

Note
Too little engine oil or poor-quality engine oil will result in premature wear of the engine.

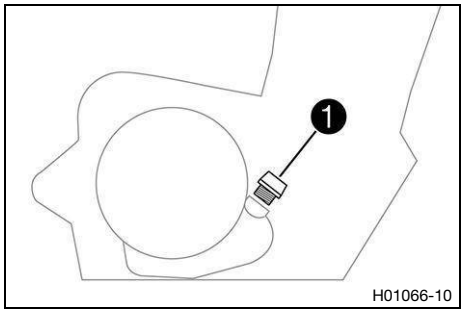

Main work
– Remove oil plug ❶ with O-ring.
– Fill engine oil to the middle of the level viewer.

engine oil	
engine oil (SAE 10W/50) (p. 199) fully synthetic	2.8 l (0.74 liq. gal_{US})

Note
In order to achieve optimal engine oil performance, it is not advisable to mix different engine oils.
Husqvarna Mobility recommends changing the engine oil when necessary.

– Mount and tighten oil plug ❶ with O-ring.

DANGER
Danger of poisoning Exhaust gases are toxic and inhaling them may result in unconsciousness and death.
– Always ensure that there is sufficient ventilation when running the engine.
– Use suitable exhaust extraction when starting or running the engine in an enclosed space.

– Start the engine and check it for leaks.

Reworking

– Check the engine oil level. (p. 162)

19.4 Checking the free travel of the clutch lever

NOTE

Clutch damage If there is no free travel by the clutch lever, the clutch will slip.

– Check the free travel of the clutch lever each time before using the vehicle.
– Adjust the free travel of the clutch lever when necessary in accordance with the specification.

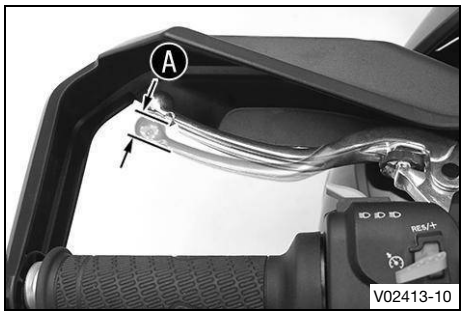

– Check the clutch lever for smooth operation.
– Move the handlebar to the straight-ahead position.
– Pull the clutch lever until resistance is perceptible, and determine the free travel A.

Free travel A of clutch lever	5 mm (0.20 in)

» If the free travel of the clutch lever does not meet specifications:
  – Set the free travel of the clutch lever. (p. 165)

– Move the handlebar back and forth over the entire steering range.

The free travel of the clutch lever must not change.

» If the free travel of the clutch lever changes:
  – Check the routing of the clutch cable.

19.5 Adjusting the free travel of the clutch lever

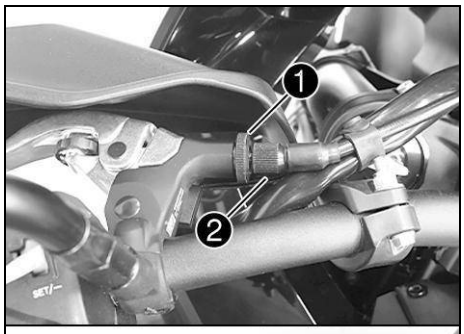

– Move the handlebar to the straight-ahead position.
– Loosen lock nut 1.
– Adjust the free travel A by turning adjusting screw 2.

Free travel A of clutch lever	5 mm (0.20 in)

– Tighten lock nut 1.

20.1 Cleaning the motorcycle

NOTE

Material damage Components can be damaged or destroyed if a high-pressure cleaner is used incorrectly.

The high pressure forces water into the electrical components, socket connectors, clutch cables, and bearings, etc.

Too high a pressure can cause malfunctions and destroy components.

– Do not direct the water jet directly on to electrical components, socket connectors, clutch cables, or bearings.
– Maintain a minimum distance between the nozzle of the high-pressure cleaner and the component.

Minimum distance	60 cm (23.6 in)

NOTE

Environmental hazard Hazardous substances cause environmental damage.

– Dispose of oils, grease, filters, fuel, cleaning agents, brake fluid, etc. correctly and in accordance with the applicable regulations.

Note

To maintain the value and appearance of the motorcycle over a long period, clean it regularly.

Avoid direct sunshine when cleaning the motorcycle.

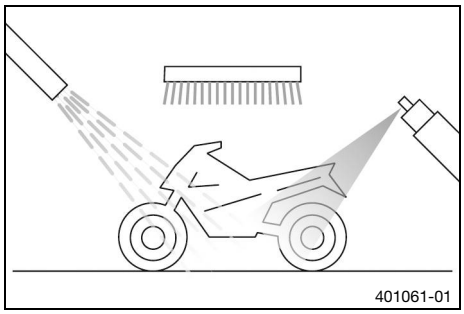

– Seal the exhaust system to prevent water from entering into it.
– Remove loose dirt first with a soft jet of water.
– Spray the heavily soiled parts with a standard commercial motorcycle cleaner and clean using a brush.

Never apply motorcycle cleaner to a dry vehicle; always rinse the vehicle with water first.

Environmentally neutral universal cleaning agent (p. 203)

Note

Use warm water containing standard motorcycle cleaner and a soft sponge.

If the vehicle was driven in road salt, clean it with cold water. Warm water would enhance the corrosive effects of salt.

– After rinsing the motorcycle with a gentle spray of water, allow it to dry thoroughly.
– Remove the cover from the exhaust system.

WARNING

Danger of accidents Moisture and dirt impair the brake system.

– Brake carefully several times to dry out and remove dirt from the brake pads and the brake discs.

– After cleaning, ride the vehicle a short distance until the engine warms up.

Note
The heat produced causes water to evaporate at inaccessible locations in the engine and on the brake system.

– After the motorcycle has cooled off, lubricate all moving parts and pivot points.

WARNING
Danger of accidents Oil, grease or wax on the brake discs reduces the brake action.
– Always keep the brake discs free of oil, fat and wax.
– Clean the brake discs with brake cleaner when necessary.

– Clean the chain. (p. 100)
– Treat bare metal (except for brake discs and the exhaust system) with an anticorrosive.

Preserving materials (p. 203)

– Treat the painted parts with a mild paint polish.

Do not polish parts that were matte when delivered as this would strongly impair the material quality.

Shine spray with beading effect (p. 203)

– Treat the plastic parts and powder-coated parts with a mild cleaning and care product.

Cleaning agents for plastics, glass, lacquers, metals, windshields and visors (p. 203)

– Oil the ignition and steering lock, tank lock, and seat lock.

Universal oil spray (p. 199)

20.2 Checks and maintenance steps for winter operation

WARNING
Danger of accidents Salt on the roads impairs the brake system.
– Brake carefully several times to remove salt from the brake linings and the brake discs.

WARNING
Danger of accidents Oil, grease or wax on the brake discs reduces the brake action.
– Always keep the brake discs free of oil, fat and wax.
– Clean the brake discs with brake cleaner when necessary.

Note
If you use the motorcycle in winter, salt can be expected on the roads. You should therefore take precautions against aggressive road salt.

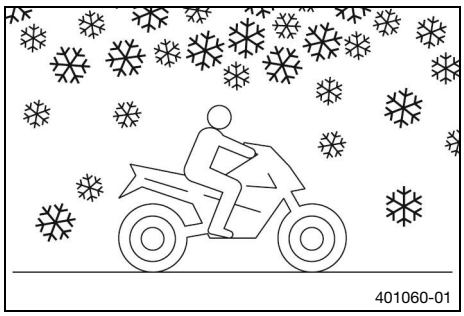

– Clean the motorcycle. (p. 166)
– Clean brake system.

After **EVERY** trip on salted roads, thoroughly clean the brake calipers and brake linings, after they have cooled down and without removing them, with cold water and dry them carefully.
After riding on salted roads, thoroughly clean the motorcycle with cold water and dry it well.

Note
Warm water enhances the corrosive effects of salt.

– Treat the engine, swingarm, and all other bare or zinc-plated parts (except the brake discs) with a wax-based anticorrosive.

Corrosion inhibitor must not come into contact with the brake discs. This would severely lower the braking effect.

– Clean the chain. (p. 100)

21.1 Storage

Note

If the vehicle will not be ridden for an extended period, additional steps are recommended.

Before storing the motorcycle, check all parts for function and wear. If service, repairs, or replacements are necessary, you should do this during the storage period (less overload of the authorized partner). This allows you to avoid long waiting periods when the next season starts.

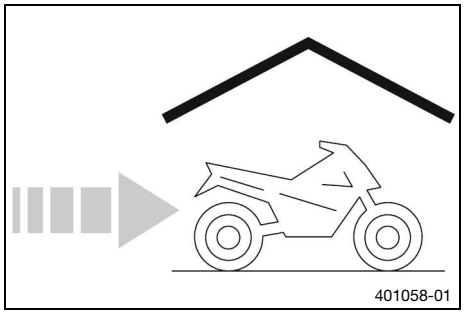

– When refueling for the last time before taking the motorcycle out of service, add fuel additive.

Fuel additive (p. 198)

– Refuel. (p. 85)

Tip

Fill the fuel tank completely as specified, using fuel with the lowest possible ethanol content.

– Clean the motorcycle. (p. 166)
– Change the engine oil and the oil filter, clean the oil screens. (p. 162)
– Check the coolant fill level and antifreeze.
– Check the tire pressure. (p. 142)
– Remove the 12 V battery. (p. 145)

Storage temperature of the 12 V battery without direct sunlight	0 °C … 35 °C (32.0 °F … 95.0 °F)

– Charge the 12 V battery. (p. 148)
– Store the vehicle in a dry location that is not subject to large fluctuations in temperature.

(Norden 901 Expedition)

– Raise the vehicle with the center stand. (p. 98)

Cover the motorcycle with a tarp or cover that is permeable to air.
Do not use non-porous materials because they prevent humidity from escaping and thus cause corrosion.

Note

Avoid running the engine of a motorcycle in storage for a short time only. Since the engine cannot warm up properly, the water vapor produced during combustion condenses and causes valves and the exhaust system to rust.

21.2 Preparing for use after storage

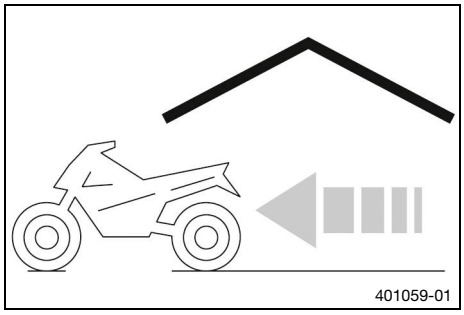

- Take the motorcycle off the front lifting gear. (p. 97)
- Remove the rear of the motorcycle from the lifting gear. (p. 96)
- Install the 12 V battery. (p. 146)
- Set time and date. (p. 66)
- Perform checks and maintenance measures when preparing for use. (p. 77)
- Take a test ride.

22.1 Troubleshooting

Cause	Finding	Remedy
The engine does not turn over when the start button is actuated	Operating error 12 V battery discharged Fuse **1**, **2** or **3** blown Main fuse blown Combination switch cable damaged No ground connection present on the starter motor	– Carry out the starting procedure. (p. 77) – Charge the 12 V battery. (p. 148) – Check the open-circuit current. – Change the fuses of individual electrical power consumers. (p. 152) – Change the main fuse. (p. 149) – Check the combination switch cable for damage. – Check the ground connection.
The engine only turns over if the clutch lever is pulled	The vehicle is in gear The vehicle is in gear and the side stand is folded out	– Shift the transmission into neutral N. – Shift the transmission into neutral N.
The engine turns but does not start	Operating error Lack of fuel Fuse **3** blown Quick-lock coupling not joined Fuel taps on the fuel tank cover closed Malfunction in the electronic fuel injection Throttle opened while starting	– Carry out the starting procedure. (p. 77) – Refuel. (p. 85) – Change the fuses of individual electrical power consumers. (p. 152) – Join quick-lock couplings. – Open the fuel taps on the fuel tank cover. – Read out the fault memory using the diagnostics tool. – When starting, **DO NOT** open the throttle. – Carry out the starting procedure. (p. 77)
Engine has too little power	Air filter is very dirty Fuel screen is very dirty Fuel filter is very dirty Malfunction in the electronic fuel injection	– Remove the air filter. – Install the air filter. – Change the fuel screen. – Check the fuel pressure. – Read out the fault memory using the diagnostics tool.
Engine overheats	Too little coolant in cooling system Radiator fins very dirty Foam formation in the cooling system Buckled or damaged radiator hose Thermostat defective Fuse **4** blown Defect in radiator fan system	– Check the transmission and cooling system for leaks. – Check the coolant level in the compensating tank. (p. 157) – Clean the radiator fins. – Drain the coolant. – Fill/bleed the cooling system. – Change the radiator hose. – Check the thermostat. – Change the fuses of individual electrical power consumers. (p. 152) – Check the radiator fan system.

Cause	Finding	Remedy
The malfunction indicator light lights up or flashes	Malfunction in the electronic fuel injection	– Read out the fault memory using the diagnostics tool.
N The idling speed indicator lamp does not light up when the transmission is in neutral	Gear position sensor not programmed	– Read out the fault memory using the diagnostics tool.
The engine dies during the trip	Lack of fuel Fuse **1**, **2** or **3** blown	– Refuel. (p. 85) – Change the fuses of individual electrical power consumers. (p. 152)
The ABS warning light lights up	ABS fuse blown Large difference in wheel speeds of the front and rear wheels Wheel speed sensor wheel bent or damaged Wheel speed sensor damaged Malfunction in ABS	– Change the ABS fuses. (p. 150) – Stop the vehicle, switch off the ignition, and start it again. – Check the wheel speed sensor wheel for damage. – Check the wheel speed sensor for damage. – Read out the ABS fault memory using the diagnostic tool.
High oil consumption	Engine vent hose bent The engine oil level is too high The engine oil is too thin (low viscosity)	– Route the vent hose without bends or change it if necessary. – Check the engine oil level. (p. 162) – Change the engine oil and the oil filter, clean the oil screens. (p. 162)
The headlight, position light, tail light, and license plate lamp are not working	Fuse **6** blown	– Change the fuses of individual electrical power consumers. (p. 152)
Combination instrument, brake light, and horn are not functional	Fuse **5** blown	– Change the fuses of individual electrical power consumers. (p. 152)
Time is not displayed or not correctly displayed	Fuse **1** blown	– Change the fuses of individual electrical power consumers. (p. 152) – Set time and date.
12 V battery discharged	Ignition was not switched off when vehicle was parked The 12-V battery is not being charged by the alternator	– Charge the 12 V battery. (p. 148) – Check the charging voltage.
The dashboard shows nothing on the display	Fuse **1**, **2** or **5** blown	– Change the fuses of individual electrical power consumers. (p. 152) – Set time and date.

23.1 Engine

23.1.1 Technical data - engine

Design	2-cylinder 4-stroke in-line engine, water-cooled
Displacement	890 cm³ (54.31 in³)
Stroke	68.8 mm (2.709 in)
Bore	90.7 mm (3.571 in)
Compression ratio	13.5:1
Control	DOHC, 4 valves per cylinder controlled via cam lever, chain drive
Valve diameter, intake	37 mm (1.46 in)
Valve diameter, exhaust	30 mm (1.18 in)
Valve clearance, cold	
Intake at: 20 °C (68.0 °F)	0.10 mm … 0.15 mm (0.0039 in … 0.0059 in)
Exhaust at: 20 °C (68.0 °F)	0.15 mm … 0.20 mm (0.0059 in … 0.0079 in)
Crankshaft bearing	Plain bearing
Big (bottom) end bearing	Plain bearing
Piston	Forged light alloy
Piston rings	1 compression ring, 1 lower compression ring, 1 oil ring with spring expander
Engine lubrication	Pressure circulation lubrication with 2 trochoidal pumps
Primary transmission	39:75
Clutch	Slipper clutch in oil bath/mechanically operated
Transmission	6 speed transmission, claw shift
Gear ratios	
1st gear	13:37
2nd gear	17:34
3rd gear	20:31
4th gear	22:28
5th gear	24:26
6th gear	23:22
Mixture formation	Electronic fuel injection
Ignition system	Contactless controlled fully electronic ignition with digital ignition adjustment
Alternator	• 14 V • 406 W (0.544 hp)
Spark plug	NGK LMAR9AI-10

Plug gap of spark plug	1.0 mm (0.039 in)
Cooling	Liquid cooling, permanent circulation of coolant by water pump
Idle speed	1,550 rpm … 1,650 rpm (25.83 Hz … 27.50 Hz)
Starting aid	Starter motor

23.1.1.1 Coolant capacity

coolant	
Coolant (p. 200) Antifreeze protection to at least: −25 °C (−13.0 °F)	1.60 l (0.423 liq. gal_{US})

23.1.1.2 Filling quantity of engine oil

engine oil	
engine oil (SAE 10W/50) (p. 199) fully synthetic	2.8 l (0.74 liq. gal_{US})

23.2 Chassis

23.2.1 Technical data - chassis

Frame	Lattice frame made of chrome molybdenum steel tubing, powder-coated
Fork **(Norden 901)**	**WP APEX OC**
Fork **(Norden 901 Expedition)**	**WP XPLOR OC**
Shock absorber **(Norden 901)**	**WP APEX**
Shock absorber **(Norden 901 Expedition)**	**WP XPLOR PDS**
Suspension travel: **(Norden 901)**	
front	220 mm (8.66 in)
rear	213.8 mm (8.417 in)
Suspension travel: **(Norden 901 Expedition)**	
front	240 mm (9.45 in)
rear	240 mm (9.45 in)
Brake system	
front	Double disc brake with radially mounted four-piston brake calipers, floating brake discs
rear	Single disc brake with dual-piston brake caliper, floating brake disc
Brake discs - diameter	
front	320 mm (12.60 in)

rear	260 mm (10.24 in)
Brake disc wear limit	
front	4.5 mm (0.177 in)
rear	4.5 mm (0.177 in)
Tire pressure when solo	
front	2.4 bar (34.8 psi)
rear	2.4 bar (34.8 psi)
Tire pressure with full payload / passenger	
front	2.6 bar (37.7 psi)
rear	2.6 bar (37.7 psi)
Final drive	16:45
Chain	5/8 x 1/4” (520) X-ring
Steering head angle	64.2° (1.121 rad)
Wheelbase	
(Norden 901)	1,512.9 mm (59.563 in)
(Norden 901 Expedition)	1,529 mm (60.20 in)
Seat Height unloaded **(Norden 901)**	
Upper position	879 mm (34.61 in)
Lower position	859 mm (33.82 in)
Seat Height unloaded **(Norden 901 Expedition)**	
Upper position	887 mm (34.92 in)
Lower position	907 mm (35.71 in)
Ground clearance unloaded	
(Norden 901)	252.4 mm (9.937 in)
(Norden 901 Expedition)	270 mm (10.63 in)
Weight without fuel approx.	
(Norden 901)	204 kg (449.7 lb)
(Norden 901 Expedition)	214 kg (471.8 lb)

Maximum permissible front axle load	175 kg (385.8 lb)
Maximum permissible rear axle load	275 kg (606.3 lb)
Maximum permissible total weight	450 kg (992.1 lb)

23.2.2 Technical data - tires

Tire front	Rear tire
90/90 - 21 M/C 54P M+S TL Pirelli SCORPION RALLY STR	150/70 R 18 M/C 70P M+S TL Pirelli SCORPION RALLY STR
The tires specified represent one of the possible series production tires. For alternative manufacturers, if any, contact an authorized manufacturer or qualified tire dealership. If local road approval regulations apply, these and the respective technical specifications must be observed.	

23.2.3 Fuel capacity

Total fuel tank capacity, approx.	
Super unleaded (ROZ 95) (p. 198)	19 l (5.0 liq. gal_{US})

23.2.3.1 Fuel capacity

Fuel reserve, approx.	3.55 l (0.938 liq. gal_{US})

23.3 Electrics

23.3.1 Battery

12 V battery	HTZ12A-BS	Battery voltage: 12 V Nominal capacity: 10 Ah Maintenance-free

23.3.2 Fuses

Fuse	75011088010	10 A
Fuse	75011088015	15 A
Fuse	75011088025	25 A
Fuse	58011109130	30 A

23.3.3 Lamps

Low beam/high beam	LED
Daytime running light/position light	LED
Dashboard illumination and indicator lights	LED
Turn signal	LED
Brake/tail light	LED

License plate lighting	LED

23.4 Fork

23.4.1 Technical data - fork (Norden 901)

Fork part number	0221C141V201102

Fork	WP APEX OC
Compression damping	
Comfort	21 clicks
Standard	15 clicks
Sport	9 clicks
Full payload	9 clicks
Rebound damping	
Comfort	21 clicks
Standard	15 clicks
Sport	9 clicks
Full payload	9 clicks
Spring length with preload spacer(s)	486 mm (19.13 in)
Spring rate	
Medium (standard)	6.5 N/mm (37.12 lb_f/in)
Fork length	887 mm (34.92 in)

23.4.2 Capacities - fork (Norden 901)

Fork oil per fork leg	
Fork oil (SAE 5) (p. 199)	475 ±5 ml (16.06 ±0.17 fl. oz_{US})

23.4.3 Technical data - fork (Norden 901 Expedition)

Fork part number	A678C141W401000

Fork	WP XPLOR OC
Compression damping	
Comfort	20 clicks
Standard	15 clicks
Sport	10 clicks
Full payload	15 clicks
Rebound damping	
Comfort	18 clicks
Standard	15 clicks
Sport	10 clicks
Full payload	15 clicks

Spring length with preload spacer(s)	464 mm (18.27 in)
Spring rate	
Weight of rider: 65 kg … 75 kg (143.3 lb … 165.3 lb)	6.2 N/mm (35.40 lb_f/in)
Weight of rider: 75 kg … 85 kg (165.3 lb … 187.4 lb)	6.7 N/mm (38.26 lb_f/in)
Weight of rider: 85 kg … 95 kg (187.4 lb … 209.4 lb)	7.2 N/mm (41.11 lb_f/in)
Spring preload - **Preload Adjuster**	
Comfort	**+0**
Standard	**+0**
Sport	**+0**
Full payload	**+3**
Fork length	912 mm (35.91 in)

23.4.4 Capacities - fork (Norden 901 Expedition)

Fork oil per fork leg	
Fork oil (48601166S1) (SAE 4) (p. 199)	630 ±5 ml (21.30 ±0.17 fl. oz_{US})

23.5 Shock absorber

23.5.1 Technical data - shock absorber (Norden 901)

Shock absorber part number	15.15.7U.30

Shock absorber	**WP APEX**
Rebound damping	
Comfort	18 clicks
Standard	12 clicks
Sport	7 clicks
Full payload	5 clicks
Preload	
Comfort	10 mm (0.39 in)
Standard	10 mm (0.39 in)
Sport	12 mm (0.47 in)
Full payload	17 mm (0.67 in)
Spring preload – preload adjuster	
Comfort	3 turns (1,080°)

Standard	3 turns (1,080°)
Sport	5 turns (1,800°)
Full payload	10 turns (3,600°)
Installation position	371 mm (14.61 in)
Spring length	195 mm (7.68 in)
Static sag	22 mm (0.87 in)
Riding sag	52 mm (2.05 in)
Spring rate	
Medium (standard)	115 N/mm (656.7 lb_f/in)
Gas assisted	20 bar (290 psi)

23.5.2 Capacities - shock absorber (Norden 901)

Shock absorber oil	
Shock absorber oil (50180751S1) (SAE 2.5) (p. 200)	Fill to the maximum mark

23.5.3 Technical data - shock absorber (Norden 901 Expedition)

Shock absorber part number	A678C441W305000

Shock absorber	**WP XPLOR PDS**
Low-speed compression damping	
Comfort	20 clicks
Standard	15 clicks
Sport	10 clicks
Full payload	7 clicks
High-speed compression damping	
Comfort	2 turns (720°)
Standard	1.5 turns (540°)
Sport	1 turn (360°)
Full payload	0.5 turns (180°)
Rebound damping	
Comfort	20 clicks
Standard	12 clicks

Sport	5 clicks
Full payload	5 clicks
Spring preload - **Preload Adjuster**	
Comfort	4 turns (1,440°)
Standard	4 turns (1,440°)
Sport	4 turns (1,440°)
Full payload	10 turns (3,600°)
Installation position	380 mm (14.96 in)
Spring length	204.3 mm (8.043 in)
Static sag	25 mm (0.98 in)
Riding sag	80 mm (3.15 in)
Spring rate	
Weight of rider: 75 kg … 85 kg (165.3 lb … 187.4 lb)	95 N/mm (542.5 lb_f/in)
Gas assisted	16 bar (232 psi)

23.5.4 Capacities - shock absorber (Norden 901 Expedition)

Shock absorber oil	
Shock absorber oil (50180751S1) (SAE 2.5) (p. 200)	Fill to the maximum mark

23.6 Tightening torque

23.6.1 engine tightening torques

Hose clip, intake flange M4	2.5 Nm (1.84 ft·lb_f)
Remaining screws for engine M5	6 Nm (4.4 ft·lb_f)
Screw, gear position sensor M5	5 Nm (3.7 ft·lb_f) **Loctite® 243**
Screw, oil filter cover M5	6 Nm (4.4 ft·lb_f)
Oil nozzle for piston cooling M5	2 Nm (1.5 ft·lb_f)

Screw, cam lever axial lock M5	6 Nm (4.4 ft·lb$_f$) **Loctite® 243**
Screw, crankshaft position sensor M5	6 Nm (4.4 ft·lb$_f$) **Loctite® 243**
Screw, thermostat case M5	6 Nm (4.4 ft·lb$_f$) **Loctite® 243**
Oil nozzle in cylinder head M5	2 Nm (1.5 ft·lb$_f$)
Engine vent nozzle M5	2 Nm (1.5 ft·lb$_f$)
Screw, shift drum retaining bracket M5	6 Nm (4.4 ft·lb$_f$) **Loctite® 243**
Pressure plate screw M5	3 Nm (2.2 ft·lb$_f$) **Loctite® 243**
Screw, shift shaft sensor M5	6 Nm (4.4 ft·lb$_f$) **Loctite® 243**
Securing screw, balancer shaft M5	5 Nm (3.7 ft·lb$_f$) **Loctite® 243**
Screw, swing angle sensor M5	6 Nm (4.4 ft·lb$_f$) **Loctite® 243**
Remaining screws for engine M6	10 Nm (7.4 ft·lb$_f$)
Screw, clutch pressure plate M6	8 Nm (5.9 ft·lb$_f$)
Screw, oil pump cover M6	10 Nm (7.4 ft·lb$_f$) **Loctite® 243**
Detent arm screw M6	10 Nm (7.4 ft·lb$_f$) **Loctite® 243**
Screw, upper guide rail M6	8 Nm (5.9 ft·lb$_f$) **Loctite® 243**
Screw, clutch cover M6	10 Nm (7.4 ft·lb$_f$)
Screw, engine case M6×30	12 Nm (8.9 ft·lb$_f$)
Screw, engine case M6×60	12 Nm (8.9 ft·lb$_f$)

Shift star screw M6	10 Nm (7.4 ft·lb_f) **Loctite® 243**
Screw, shift lever M6	14 Nm (10.3 ft·lb_f) **Loctite® 243**
Screw, starter motor M6	10 Nm (7.4 ft·lb_f)
Stator screw M6	10 Nm (7.4 ft·lb_f) **Loctite® 243**
Screw, valve cover M6	10 Nm (7.4 ft·lb_f)
Screw, water pump cover M6	10 Nm (7.4 ft·lb_f) **Loctite® 243**
Screw, water pump impeller M6	10 Nm (7.4 ft·lb_f) **Loctite® 243**
Chain shaft screw, cylinder head M6	10 Nm (7.4 ft·lb_f)
Screw, ignition cover M6×30	10 Nm (7.4 ft·lb_f)
Screw, ignition cover M6×35	10 Nm (7.4 ft·lb_f)
Screw, camshaft bearing bridge M6	10 Nm (7.4 ft·lb_f)
Screw, timing chain shaft M6	10 Nm (7.4 ft·lb_f)
Screw, bleeder flange **EJOT ALtracs®** – M6×12	8 Nm (5.9 ft·lb_f) **Loctite® 243**
Screw, shift shaft retaining bracket M6	10 Nm (7.4 ft·lb_f) **Loctite® 243**
Screw, main shaft bearing support M6	10 Nm (7.4 ft·lb_f) **Loctite® 243**
Screw, oil pump housing M6	10 Nm (7.4 ft·lb_f)
Screw, oil pan M6×30	10 Nm (7.4 ft·lb_f)
Screw, oil pan M6×35	10 Nm (7.4 ft·lb_f)
Screw, oil/water heat exchanger M6	10 Nm (7.4 ft·lb_f) **Loctite® 243**

Screw, ignition coil M6	8 Nm (5.9 ft·lb$_f$)
Screw, freewheel ring M6	14 Nm (10.3 ft·lb$_f$) **Loctite® 243**
Screw, clutch release lever M6	10 Nm (7.4 ft·lb$_f$) **Loctite® 243**
Screw, clutch cable retaining bracket M6	10 Nm (7.4 ft·lb$_f$) **Loctite® 243**
Nut, starter motor cable M6	5 Nm (3.7 ft·lb$_f$)
Stator screw M6	10 Nm (7.4 ft·lb$_f$)
Remaining screws for engine M8	20 Nm (14.8 ft·lb$_f$)
Screw, engine case M8×45	25 Nm (18.4 ft·lb$_f$) Long-life grease
Screw, engine case M8×55	25 Nm (18.4 ft·lb$_f$) Long-life grease
Screw, engine case M8×65	25 Nm (18.4 ft·lb$_f$) Long-life grease
Screw, engine case M8×90	25 Nm (18.4 ft·lb$_f$) Long-life grease
Slide rail screw M8	15 Nm (11.1 ft·lb$_f$) **Loctite® 243**
Stud, exhaust flange M8	15 Nm (11.1 ft·lb$_f$) **Loctite® 243**
Exhaust flange nut M8	15 Nm (11.1 ft·lb$_f$) Copper paste
Screw plug, locking screw M8	15 Nm (11.1 ft·lb$_f$)
Screw, oil pump idler gear M8	15 Nm (11.1 ft·lb$_f$) **Loctite® 243**
Oil nozzle for clutch lubrication M8	5 Nm (3.7 ft·lb$_f$) **Loctite® 243**

Screw, conrod bearing M8×0.75 engine oil	1.	5 Nm (3.7 ft·lb$_f$)
	2.	20 Nm (14.8 ft·lb$_f$)
	3.	90° (1.57 rad)
Knock sensor screw M8		20 Nm (14.8 ft·lb$_f$)
Screw with washer, engine case M8×65		25 Nm (18.4 ft·lb$_f$)
Screw with washer, engine case M8×90		25 Nm (18.4 ft·lb$_f$)
Screw, release for timing chain tensioner M10×1		8 Nm (5.9 ft·lb$_f$)
Cylinder head screw M10×1.25 engine oil	1.	5 Nm (3.7 ft·lb$_f$)
	2.	15 Nm (11.1 ft·lb$_f$)
	3.	90° (1.57 rad)
	4.	90° (1.57 rad)
Oil pressure sensor M10×1		10 Nm (7.4 ft·lb$_f$)
Spark plug M10		11 Nm (8.1 ft·lb$_f$)
Coolant temperature sensor M10×1.25		10 Nm (7.4 ft·lb$_f$)
Screw plug, cam lever shaft M10×1		8 Nm (5.9 ft·lb$_f$)
Screw plug, bearing support M10×1		12 Nm (8.9 ft·lb$_f$) Loctite® 243
Screw, rotor M12×1.5		90 Nm (66.4 ft·lb$_f$) Long-life grease
Screw plug, cylinder head oil drain M12×1.5		15 Nm (11.1 ft·lb$_f$)
Screw plug, water jacket M16×1.5		20 Nm (14.8 ft·lb$_f$) Loctite® 243
Nut, inner clutch hub M20×1.5		135 Nm (99.6 ft·lb$_f$)
Plug, oil screen M20×1.5		20 Nm (14.8 ft·lb$_f$)
Screw plug, timing chain tensioner M24×1.5		25 Nm (18.4 ft·lb$_f$)

Screw plug, alternator cover M24×1.5	8 Nm (5.9 ft·lb$_f$)
Screw plug, water pump drain hole **EJOT ALtracs® Plus** – 60×14	8 Nm (5.9 ft·lb$_f$) **Loctite® 243**

23.6.2 Chassis tightening torques

Nut, valve **ISO 10V2**	12 Nm (8.9 ft·lb$_f$) **Loctite® 2701**
Throttle valve body hose clamp	2.8 Nm (2.07 ft·lb$_f$)
Nut, socket	4 Nm (3.0 ft·lb$_f$)
Brake fluid reservoir cover, front	2 Nm (1.5 ft·lb$_f$)
Brake fluid reservoir cover, rear	1.5 Nm (1.11 ft·lb$_f$)
Compensating tank cover	1.1 Nm (0.81 ft·lb$_f$)
Screw, fixed grip, left M4×12	3 Nm (2.2 ft·lb$_f$)
Remaining nuts on chassis M4	3 Nm (2.2 ft·lb$_f$)
Remaining screws on chassis M4	3 Nm (2.2 ft·lb$_f$)
Screws, reflector bracket M5	5 Nm (3.7 ft·lb$_f$) **Loctite® 243**
Screw, air box cover fastening M5×12	3 Nm (2.2 ft·lb$_f$)
Screw, front turn signal adapter M5	5 Nm (3.7 ft·lb$_f$)
Remaining nuts on chassis M5	5 Nm (3.7 ft·lb$_f$)
Remaining screws on chassis M5	5 Nm (3.7 ft·lb$_f$)
Screw, foot brake lever stub M5×16	10 Nm (7.4 ft·lb$_f$) **Loctite® 243**
Screw, side stand sensor M5	2 Nm (1.5 ft·lb$_f$) **Loctite® 243**
Screw, heat guard M5	5 Nm (3.7 ft·lb$_f$) **Loctite® 243**

Screw, combination switch, left M5	1.5 Nm (1.11 ft·lb$_f$)
Screw, combination switch, right M5×10	5 Nm (3.7 ft·lb$_f$)
Screw, sprocket cover M5×17	5 Nm (3.7 ft·lb$_f$)
Screw, air filter box at bottom of subframe M5×20	5 Nm (3.7 ft·lb$_f$) Loctite® 243
Screw, throttle twist grip M5	3.5 Nm (2.58 ft·lb$_f$)
Screw, license plate holder M5	5 Nm (3.7 ft·lb$_f$) Loctite® 243
Spoke nipple M5	6 Nm (4.4 ft·lb$_f$)
Screw, tank protector plate to carrier M5×12	3 Nm (2.2 ft·lb$_f$)
Screw, tail end lower part on side of subframe M5×10	3 Nm (2.2 ft·lb$_f$) Loctite® 243
Windshield screw M5×14	5 Nm (3.7 ft·lb$_f$)
Screw, splash protector, link fork M5×20	10 Nm (7.4 ft·lb$_f$) Loctite® 243
Screw, fuel level sensor M5×16	3 Nm (2.2 ft·lb$_f$)
Screw, fuel tank insert M5	3 Nm (2.2 ft·lb$_f$)
Screw, fuel tank cap M5	3 Nm (2.2 ft·lb$_f$)
Screw, mask support cover M5×17	3.5 Nm (2.58 ft·lb$_f$)
Screw, fender on fork protector M5×12	3 Nm (2.2 ft·lb$_f$)
Brake line holder on fork screw M5	1 Nm (0.7 ft·lb$_f$)
Screw, splash protector, shock absorber M5×17	2.8 Nm (2.07 ft·lb$_f$)
Collar screw, mask support carriers on inner spoiler M5×12	3 Nm (2.2 ft·lb$_f$) Loctite® 243
Collar screw, instrument support on mask support M5×12	5 Nm (3.7 ft·lb$_f$)
Mask support special screw M5×14	5 Nm (3.7 ft·lb$_f$)

Special screw, trim M5×12	3 Nm (2.2 ft·lb$_f$)
Screw, combination instrument M5×8	4 Nm (3.0 ft·lb$_f$) **Loctite® 243**
Mask support special screw M5×12	5 Nm (3.7 ft·lb$_f$)
Screw, rear fairing carrier plate M6×12	9 Nm (6.6 ft·lb$_f$) **Loctite® 243**
Screw, activated carbon filter on retaining bracket M6×18	8 Nm (5.9 ft·lb$_f$) **Loctite® 243**
Remaining nuts on chassis M6	10 Nm (7.4 ft·lb$_f$)
Remaining screws on chassis M6	10 Nm (7.4 ft·lb$_f$)
Screw, rear brake disc M6×19	14 Nm (10.3 ft·lb$_f$) **Loctite® 243**
Screw, front brake disc M6×19	14 Nm (10.3 ft·lb$_f$) **Loctite® 243**
Screw, magnetic holder on side stand M6	2 Nm (1.5 ft·lb$_f$) **Loctite® 243**
Screw, rear wheel speed sensor M6×16	6 Nm (4.4 ft·lb$_f$)
Screw, ignition lock (tamper-proof screw) M6	Tighten until the head tears off. **Loctite® 243**
Screw, front wheel speed sensor M6×16	6 Nm (4.4 ft·lb$_f$)
Screw, ground wire on frame M6	6 Nm (4.4 ft·lb$_f$)
Screw, clutch lever assembly M6×20	5 Nm (3.7 ft·lb$_f$)
Screw, radiator bracket, bottom M6×10	5 Nm (3.7 ft·lb$_f$)
Screw, 6-D sensor M6×18	5 Nm (3.7 ft·lb$_f$)
Screw, seat lock M6×20	10 Nm (7.4 ft·lb$_f$) **Loctite® 243**
Screw, battery terminal M6×20	4.5 Nm (3.32 ft·lb$_f$)

Screw, passenger footpeg bracket M6×16		9 Nm (6.6 ft·lb$_f$) **Loctite® 243**
Screw, battery holding bracket M6×12		4.5 Nm (3.32 ft·lb$_f$)
Screw, ground wire on starter motor M6×25		10 Nm (7.4 ft·lb$_f$)
Cable on starter motor screw M6		5 Nm (3.7 ft·lb$_f$)
Screw, shift rod M6×20		10 Nm (7.4 ft·lb$_f$) **Loctite® 243**
Screw, shift lever on shift shaft M6×15		10 Nm (7.4 ft·lb$_f$) **Loctite® 243**
Nut, hand brake lever M6	Attach torque to nut.	10 Nm (7.4 ft·lb$_f$)
Screw, front brake assembly M6×20		5 Nm (3.7 ft·lb$_f$)
Nut, push rod, foot brake lever M6		6 Nm (4.4 ft·lb$_f$)
Screw, brake cylinder on the rear brake system M6×25		10 Nm (7.4 ft·lb$_f$) **Loctite® 243**
Screw, cross brace in rear M6×10		10 Nm (7.4 ft·lb$_f$) **Loctite® 243**
Screw, engine guard M6×8		8 Nm (5.9 ft·lb$_f$)
Screw, engine guard M6×10		10 Nm (7.4 ft·lb$_f$) **Loctite® 243**
Nut, shift rod M6LH		6 Nm (4.4 ft·lb$_f$)
Screw, cross member on subframe M6×12		6 Nm (4.4 ft·lb$_f$) **Loctite® 243**
Screw, voltage regulator M6×25		6 Nm (4.4 ft·lb$_f$) **Loctite® 243**
Screw, adapter piece frame for mask support carrier M6×16		10 Nm (7.4 ft·lb$_f$) **Loctite® 243**
Screw, license plate holder on subframe M6×16		10 Nm (7.4 ft·lb$_f$) **Loctite® 243**

Screw, license plate holder on lower rear panel M6×18	10 Nm (7.4 ft·lb$_f$) **Loctite® 243**
Screw, sliding seat for side cover M6×20	10 Nm (7.4 ft·lb$_f$) **Loctite® 243**
Screw, chain guide M6	10 Nm (7.4 ft·lb$_f$) **Loctite® 243**
Screw, fuel cock M6×12	6 Nm (4.4 ft·lb$_f$)
Screw, fuel pump M6×20	6 Nm (4.4 ft·lb$_f$)
Screw, fuel tank clamp M6	3 Nm (2.2 ft·lb$_f$)
Screw, mask support on steering head M6×18	10 Nm (7.4 ft·lb$_f$) **Loctite® 243**
Screw, cable on starter relay M6	4.5 Nm (3.32 ft·lb$_f$)
Screw, tank guard on engine guard, bottom M6×18	10 Nm (7.4 ft·lb$_f$)
Screw, tank guard on engine guard, front M6×25	10 Nm (7.4 ft·lb$_f$)
Screw, tail light M6×16	5 Nm (3.7 ft·lb$_f$) **Loctite® 243**
Screw, headlight adapter on headlight M6×16	5 Nm (3.7 ft·lb$_f$) **Loctite® 243**
Screw, headlight M6×18	10 Nm (7.4 ft·lb$_f$) **Loctite® 243**
Screw, ABS module on holder M6×12	8 Nm (5.9 ft·lb$_f$)
Screw, ABS module retaining bracket on frame M6×18	10 Nm (7.4 ft·lb$_f$) **Loctite® 243**
Screw, tank support rubber on tank protection support M6×15	10 Nm (7.4 ft·lb$_f$) **Loctite® 243**
Screw, plate adapter, chain protection M6×12	10 Nm (7.4 ft·lb$_f$) **Loctite® 243**
Screws, mask support carrier M6×16	10 Nm (7.4 ft·lb$_f$) **Loctite® 243**

Nut, foot brake lever adjustment M6		6 Nm (4.4 ft·lb$_f$)
Screw, seat support in subframe M8×35		15 Nm (11.1 ft·lb$_f$) **Loctite® 243**
Screw, foot brake lever M8×30		25 Nm (18.4 ft·lb$_f$) **Loctite® 243**
Remaining nuts on chassis M8		25 Nm (18.4 ft·lb$_f$)
Remaining screws on chassis M8		25 Nm (18.4 ft·lb$_f$)
Screw, passenger footpeg bracket M8×20		25 Nm (18.4 ft·lb$_f$) **Loctite® 243**
Screw, top triple clamp M8×30		15 Nm (11.1 ft·lb$_f$)
Screw, bottom triple clamp M8×35		12 Nm (8.9 ft·lb$_f$)
Screw, fork shoe M8×20		15 Nm (11.1 ft·lb$_f$)
Screw, handlebar clamp M8×25		20 Nm (14.8 ft·lb$_f$)
Screw, steering damper M8×25		8 Nm (5.9 ft·lb$_f$) **Loctite® 243**
Screw, steering stem M8×25		20 Nm (14.8 ft·lb$_f$) **Loctite® 243**
Nut, manifold on cylinder head M8 Copper paste	Tighten the nuts evenly. Do not bend the metal.	20 Nm (14.8 ft·lb$_f$)
Screw, presilencer on frame M8		15 Nm (11.1 ft·lb$_f$) **Loctite® 243**
Screw, main silencer fastening M8×50		15 Nm (11.1 ft·lb$_f$)
Screw, engine brace to frame M8×50		25 Nm (18.4 ft·lb$_f$) **Loctite® 243**
Screw, shift lever M8×30		25 Nm (18.4 ft·lb$_f$) **Loctite® 243**
Screw, stand spring fastening M8		15 Nm (11.1 ft·lb$_f$) **Loctite® 2701**

Pin, rear brake caliper M8	22 Nm (16.2 ft·lb$_f$) **Loctite® 243**
Screw, passenger handles M8×40	25 Nm (18.4 ft·lb$_f$) **Loctite® 243**
Securing bolt for brake pads M8×45	10 Nm (7.4 ft·lb$_f$)
Screw, skid plate support M8×40	25 Nm (18.4 ft·lb$_f$) **Loctite® 243**
Nut, rear sprocket screw M8	35 Nm (25.8 ft·lb$_f$) **Loctite® 2701**
Screw, subframe brace M8×35	25 Nm (18.4 ft·lb$_f$) **Loctite® 243**
Screw, foot brake lever spring M8	12 Nm (8.9 ft·lb$_f$) **Loctite® 2701**
Screw, case system connection M8×20	25 Nm (18.4 ft·lb$_f$) **Loctite® 243**
Screw, exhaust system clamp M8	12 Nm (8.9 ft·lb$_f$)
Screw, activated carbon filter holder M8×16	25 Nm (18.4 ft·lb$_f$) **Loctite® 243**
Front brake caliper clamp screw M8×35	25 Nm (18.4 ft·lb$_f$)
Screw, sprocket M10×18	60 Nm (44.3 ft·lb$_f$) **Loctite® 2701**
Remaining nuts on chassis M10	45 Nm (33.2 ft·lb$_f$)
Remaining screws on chassis M10	45 Nm (33.2 ft·lb$_f$)
Screw, front brake caliper M10×1.25	45 Nm (33.2 ft·lb$_f$) **Loctite® 243**
Screw, footpeg bracket, front M10	45 Nm (33.2 ft·lb$_f$) **Loctite® 243**
Screw, handlebar mount M10×35	45 Nm (33.2 ft·lb$_f$) **Loctite® 243**

Screw, side stand M10×30	40 Nm (29.5 ft·lb$_f$) **Loctite® 243**
Banjo bolt, brake line M10×1	25 Nm (18.4 ft·lb$_f$)
Screw, bottom front engine connection M10×40	45 Nm (33.2 ft·lb$_f$) **Loctite® 243**
Screw, subframe, top M10×24	50 Nm (36.9 ft·lb$_f$) **Loctite® 243**
Turn signal nut M10×1.25	4 Nm (3.0 ft·lb$_f$)
Screw, top front engine connection M10×45	45 Nm (33.2 ft·lb$_f$) **Loctite® 243**
Screw, engine brace on engine M10×60	45 Nm (33.2 ft·lb$_f$)
Screw, subframe, bottom M10×35	50 Nm (36.9 ft·lb$_f$) **Loctite® 243**
Screw, swingarm pivot M12×40	100 Nm (73.8 ft·lb$_f$)
Top shock absorber screw M12×50	80 Nm (59.0 ft·lb$_f$) **Loctite® 2701**
Bottom shock absorber screw M12×50	80 Nm (59.0 ft·lb$_f$) **Loctite® 2701**
Oxygen sensor M18×1.5	50 Nm (36.9 ft·lb$_f$)
Steering head screw M20×1.5	18 Nm (13.3 ft·lb$_f$)
Nut, wheel spindle, rear M25×1.5	90 Nm (66.4 ft·lb$_f$) Long-life grease
Screw, wheel spindle, front M25×1.5	45 Nm (33.2 ft·lb$_f$) Long-life grease
Remaining screws on chassis **EJOT PT®** – K45×12 – T20	1 Nm (0.7 ft·lb$_f$)
Remaining screws on chassis **EJOT PT®** – K50×12 – T20	1 Nm (0.7 ft·lb$_f$)
Remaining screws on chassis **EJOT PT®** – K50×14 – T20	1 Nm (0.7 ft·lb$_f$)
Remaining screws on chassis **EJOT PT®** – K50×16 – T20	2 Nm (1.5 ft·lb$_f$)

Remaining screws on chassis **EJOT PT®** – K50×18 – T20	2 Nm (1.5 ft·lb_f)

24.1 Declarations of conformity

Note
The functional and equipment scope is model-dependent and may not include all wireless systems and application areas referred to.

KTM AG hereby declares that the **Immo641** wireless system conforms with the relevant guidelines. The full text of the Declaration of Conformity is available at the following Internet address.
Certification website: https://www.ktm.com/immo641

Polaris hereby declares that the **Connectivity Control Unit "CCU-2"** wireless system conforms with the relevant guidelines. The full text of the Declaration of Conformity is available at the following Internet address.
Certification website: https://www.ktm.com/ccu-2

LDL Technology hereby declares that the **Tyre Pressure Monitoring System** wireless system conforms with the relevant guidelines. The full text of the Declaration of Conformity is available at the following Internet address.
Certification website: https://www.ktm.com/tpms

Schrader Electronics Ltd hereby declares that the **Tyre Pressure Monitoring System** wireless system conforms with the relevant guidelines. The full text of the Declaration of Conformity is available at the following Internet address.
Certification website: https://www.ktm.com/tpms

24.2 Country-specific declarations of conformity

Immo641

MCMC
CIDF18000141

CNC COMISIÓN NACIONAL DE COMUNICACIONES
H-21170

RTIKTMI18-0315, KTM, Minda Immo641
La operación de este equipo está sujeta a las siguientes dos condiciones: (1) es posible que este equipo o dispositivo no cause interferencia perjudicial y (2) este equipo o dispositivo debe aceptar cualquier interferencia, incluyendo la que pueda causar su operación no deseada.

Complies with IMDA Standards N2035-18

ictQATAR
Type Approval reg. No.: CRA/SA/2018/R-7050

Company Name: KTM AG
Equipment Name: Immobilizer System
Model Name: Minda Immo641
Manufactured Date:
Manufacturer / Country: Minda Corporation Limited / India

R-R-kTM-MindaImmo641

UA.TR.109

Israel 51-65016

מוצר זה פטור מרישיון הפעלה אלחוטי.
המוצר אסור לשימוש למתן שרות לצד ג'.
אסור להחליף אנטנת המכשיר המקורית.
אסור לעשות במכשיר כל שינוי טכני.

This product contains radio equipment (125 kHz transmitter) which is conform with the regulations for communications equipment (extremely low-power radio station) specified in article 6, paragraph 1 of the Radio Law Enforcement Regulations.

ANATEL
Agência Nacional de Telecomunicações
03469-18-11400

This product does not need an Israeli wireless operation license.
It is forbidden to use this product for service to third party.
It is forbidden to replace the original antenna
It is forbidden to make any technical change in this product.

AGREE PAR L'ANRT MAROC
Numéro d'agrément: MR 16565 ANRT 2018
Date d'agrément: 15/05/2018

" Este equipamento opera em caráter secundário, isto é, não tem direito a proteção contra interferência prejudicial, mesmo de estações do mesmo tipo, e não pode causar interferência a sistemas operando em caráter primário."

F03629-01

25.1 Recycling

I02045-10

Further information is available at the following website.
Recycling information website: https://www.quefairedemesdechets.fr

A Technical terms

ABS	Anti-lock braking system	Safety system that prevents locking of the wheels when riding straight ahead without the influence of lateral forces.
	Easy Shift	Engine electronics function for shifting up and down without clutch operation.
MTC	Motorcycle Traction Control	Additional engine management function, where the engine torque is reduced in the event of rear wheel slip.
OBD	On-board diagnosis	Vehicle system that monitors the specified parameters of the vehicle electronics.
	Ride Husqvarna	System for wireless communication with suitable cell phones and audio devices for telephony and audio.

B Fuels

Super unleaded

Standards	
• ROZ 95	→ DIN EN 228

Fuel additive

Recommended supplier
MOTOREX®
• FUEL STABILIZER

C Operating supplies

Street chain spray

Recommended supplier
MOTOREX® • CHAINLUBE ROAD STRONG

Fork oil

Order details	
• 48601166S1	
Standards	
• SAE 4	→ SAE

Fork oil

Recommended supplier	
MOTOREX® • RACING FORK OIL	
Standards	
• SAE 5	→ SAE

Universal oil spray

Recommended supplier
MOTOREX® • JOKER 440 SYNTHETIC

Copper paste

Long-life grease

Recommended supplier
MOTOREX® • Bike Grease 2000

engine oil

Recommended supplier
MOTOREX® • POWER SYNT 4T

Standards	
→ JASO T903 MA2	
• SAE 10W/50	→ SAE
Properties	
• fully synthetic	

Shock absorber oil

Order details	
• 50180751S1	
Standards	
• SAE 2.5	→ SAE

Brake fluid DOT 5.1

Recommended supplier
MOTOREX® • BRAKE FLUID DOT 5.1
Standards
→ DOT

Coolant

Recommended supplier	
MOTOREX® • COOLANT M3.0	
Properties	
• Antifreeze protection to at least	−25 °C (−13.0 °F)

D Electrics

Low beam/high beam (LED)

Product code	
• LED	

12 V battery (HTZ12A-BS)

Product code	
• HTZ12A-BS	
Properties	
• Battery voltage	12 V
• Nominal capacity	10 Ah
• Maintenance-free	

Turn signal (LED)

Product code
• LED

Brake/tail light (LED)

Product code
• LED

License plate lighting (LED)

Product code
• LED

Dashboard illumination and indicator lights (LED)

Product code
• LED

Fuse (75011088010)

Product code
• 75011088010
Properties
• 10 A

Fuse (75011088015)

Product code

- 75011088015

Properties

- 15 A

Fuse (75011088025)

Product code

- 75011088025

Properties

- 25 A

Fuse (58011109130)

Product code

- 58011109130

Properties

- 30 A

Daytime running light/position light (LED)

Product code

- LED

E Cleaning agents

Shine spray with beading effect

Recommended supplier

MOTOREX®
- MOTO SHINE MS1

Chain cleaner

Recommended supplier

MOTOREX®
- CHAIN CLEAN

Preserving materials

Recommended supplier

MOTOREX®
- MOTO PROTECT

Cleaning agents for plastics, glass, lacquers, metals, windshields and visors

Recommended supplier

MOTOREX®
- QUICK CLEANER

Environmentally neutral universal cleaning agent

Recommended supplier

MOTOREX®
- MOTO CLEAN UNIVERSAL

F Icons

F.1 Symbol colors

F.1.1 Red symbols

Red symbols indicate a fault status that requires immediate intervention.

	The oil pressure warning light lights up red

F.1.2 Yellow and orange symbols

Yellow and orange symbols indicate a malfunction status that requires prompt intervention. Active driving aids are also represented by yellow or orange symbols.

	Ice warning is active on the display.
	ABS warning light lights up yellow
	The malfunction indicator light lights up yellow
	TC indicator lamp lights up/flashes yellow
	The cruise control system indicator lamp lights up yellow
	General warning light lights up yellow

F.1.3 Green and blue symbols

Green and blue symbols convey information.

	The turn signal indicator light flashes green with a steady blinking interval
	The high beam indicator lamp lights up blue
	The cruise control system indicator lamp lights up green
	The idle indicator lamp lights up green

1

12 V battery
charging 148
12 V battery
installation 146
removing 145

A

ABS fuses
changing 150
ACC1
front 156
rear 156
ACC2
front 156
rear 156
Auxiliary substances 17

B

Battery cover
installation 113
removing 113
Brake discs
checking 127
Brake fluid
adding front brake 128
adding to rear brake 131
Brake fluid level
checking on front brake 128
checking on rear brake 131
Brake lining retainers
checking on front brake 130
checking on rear brake 132
Brake pad
checking on front brake 130
Brake pads
checking on rear brake 132
Brake pedal
adjusting the basic position 71
checking the free travel 130
Brakes 82
Braking 82
Breakdown
towing 85

C

Chain
checking 103
cleaning 100
dirt, checking for 100
Chain tension
adjusting 102
checking 101
Clutch lever
adjusting the basic position 69
Coolant level
checking in the compensating tank 157
correcting in the compensating tank 158
Cornering MTC 160
Customer service 17

D

dashboard
ABS mode 48
activation and testing 36
Audio (optional) 57
Bike info 51
Bluetooth (optional) 60
Clock & date 63
Clock format 64
Consumption 65
Date format 64
Distance 64
Easy Shift 49
Extra Functions 66
favorites 54, 58
Favorites-display 1 - 4 58
Headset Type (optional) 62
Heating (optional) 49
Heating Grips (optional) 49
Heating Rider Seat (optional) 50
indicator lamps 37
Interface 50
Language 66
last search 54
Motorcycle 46
MTC + MSR 48
navigation 53
overview 35
Phone Pairing (optional) 60
Pressure 65
Quick selector down 59
Quick selector up 59
Ride Husqvarna (optional) 59
Ride Mode 47, 160
Riders Headset (optional) 61
Settings 58
Shift light RPM1 63

Shift light RPM2 63
Shift light state 62
skip Waypoint 55
Slip Adjuster (optional) 51
stop Navigation 56
Temperature 65
Throttle (optional) 50
Trip 1 52
Trip 2 53
Trip info 52
Units 64
volume 56
warnings 36

Declarations of conformity
country-specific 194

Defined use 14

Driving
starting off 78

E

Electric starter 25

Engine
running in 75

Engine number 21

Engine oil
adding 164
changing 162

Engine oil level
checking 162

Engine sprocket
checking 103

Environment 13

F

Figures 17

Foot brake lever stub
adjusting 71

Fork
adjusting the spring preload 91
compression damping, adjusting 89
rebound, adjusting 90

Fork legs
cleaning the dust boots 119

Free travel of clutch lever
adjusting 165
checking 165

Front fender
installation 118
removing 118

Front rider's seat
adjusting 68
mounting 100
removing 99

Front wheel
installation 135
removing 134

Fuel tank cap
closing 28
opening 27

Fuel tank fairing left
installation 121
removing 120

Fuel tank fairing right
installation 122
removing 121

Fuel tank spoiler left
removing 114

Fuel tank spoiler right
removing 116

Fuel tank spoiler, center
installation 114
removing 114

Fuse
of the individual electrical power consumers, changing 152

G

Gear shift lever
adjusting the basic position 72
checking the basic position 72

H

Handbrake lever
adjusting the basic position 70

Handlebar position
adjusting 69

Headlight
adjusting headlight range 153
setting, checking 153

I

Ignition lock 26
implied warranty 17
Improper use 14
indicator lamps 37
Intended use 14

K

Key number 20
Kill switch 25

L

Left fuel tank spoiler
installation 115
Loading the vehicle 75
Luggage 75

M

Main fuse
changing 149
Manufacturer warranty 17
Motorcycle
cleaning 166
lifting gear at rear, raising with 96
raising the front with lifting gear 96
removing the front from the lifting gear 97
removing the rear from the lifting gear 96
Motorcycle traction control 160

O

Oil filter
changing 162
Oil screens
cleaning 162
Owner's manual 14

P

Parking 83
Passenger seat
mounting 99
removing 99
Preparing for use
after storage 170
checks and maintenance measures when preparing for use 77
Notes on preparing for first use 74
Protective clothing 13

R

Rear hub damping rubbers
checking 139
Rear sprocket
checking 103
Rear wheel
installation 138
removing 137
Recycling 195
Refueling
fuel 85
Resources 17
Riding 79
Right fuel tank spoiler
installation 117

S

Safe use 12
Service 17
Shifting 79
Shock absorber
adjusting the high-speed compression damping 93
adjusting the low-speed compression damping 92
adjusting the rebound damping 93
adjusting the spring preload 94
Side bag carrier
installation 106
removing 105
Side bags
installation 110
removing 109
Side fairing left
installation 111
removing 111
Side fairing right
installation 112
removing 112
Skid plate
installation 124
removing 122
spare parts 17
Spoke tension
checking 142
Starting 77
Steering
locking 26
unlocking 26
Steering lock 26
Stopping 83
Storage 169
Storage compartment
USB-C socket 27
Storage compartment, left
closing 30

opening 29
Storage compartment, right
closing 31
opening 30
Supplementary headlights
adjusting headlight range 155
setting, checking 154

T

Tampering 12
Technical accessories 17
Time
adjusting 66
Tire condition
checking 140
Tire pressure
checking 142
towing 85
Transportation 84
Type approval label 20

U

USB-C socket 27

V

Vehicle
raising with the center stand 98
removing from the center stand 98
Vehicle identification number 20
VIN 20

W

Windshield
installation 120
removing 119
Winter operation
checks and maintenance steps 167
Work rules 13

3402920en

13/04/2026

Husqvarna Mobility GmbH
Stallhofnerstraße 3 | 5230 Mattighofen