Owner's manual **2027**

Husqvarna

701 Enduro US

Item no.: 3402911en

FOR | PIONEERS

Dear Husqvarna Mobility-customer,

Congratulations on your decision to purchase a Husqvarna motorcycle. You are now the owner of a state-of-the-art sports vehicle which, with proper care, will bring you pleasure for a long time to come. We hope you enjoy your bike and have a safe journey at all times!

You can enter the serial numbers of your vehicle below to find the serial numbers more quickly if required:

Vehicle identification number (p. 21)	Stamp of the contractual partner
Engine number (p. 21)	

The owner's manual contained the latest information for this model series at the time of publication. However, minor differences due to further developments in design cannot be ruled out completely.

All specifications are non-binding. Husqvarna Mobility GmbH specifically reserve the right to modify or delete technical specifications, prices, colors, forms, materials, services, designs, equipment, etc. without prior notice and without specifying reasons, to adapt these to local conditions, as well as to stop production of a particular model without prior notice. Husqvarna Mobility assumes no liability for delivery options, deviations from figures and descriptions, or for misprints and other errors. The models portrayed partly contain special equipment that does not belong to the regular scope of supply.

© 2026 Husqvarna Mobility GmbH, Mattighofen Austria

All rights reserved. Figures: Visus Studios/INDG/Husqvarna Mobility

Written permission from the copyright owner is required before any duplication or reproduction.

ISO 9001

Husqvarna Mobility GmbH applies quality assurance processes that lead to the highest possible product quality as defined in the ISO 9001 international quality management standard.

12 100 6061

REG.NO. 12 100 6061

Issuing institution:

TÜV SÜD Management Service GmbH

Husqvarna Mobility GmbH
Stallhofnerstraße 3
5230 Mattighofen, Austria

This document is valid for:

701 Enduro US (F2675127)

3402911en

06/10/2026

Table of contents

1 Means of representation 9
1.1 Conventions 9
1.1.1 Icons 9
1.1.2 Formatting 9
1.1.3 Abbreviations 9
2 Safety 10
2.1 Safety instructions 10
2.2 Reporting safety defects 10
2.3 Noise emission warranty 10
2.4 Operating noise warning 11
2.5 Manufacturer warranty for the exhaust monitoring system 11
2.6 Consumer rights 11
2.7 Ban on tampering 12
2.8 Safe use 12
2.9 Protective clothing 12
2.10 Work rules 13
2.11 Environment 13
2.12 Owner's manual 13
2.13 Use definition – intended use 14
2.14 Improper use 14
2.15 Safety markings on the motorcycle 14
2.15.1 Overview of labels 14
2.15.2 Label in detail 15
3 Important notes 17
3.1 Manufacturer's warranty, implied warranty 17
3.2 Auxiliary material, operating material 17
3.3 Spare parts, accessories 17
3.4 Service 17
3.5 Figures 17
3.6 Customer service 18
4 View of the vehicle 19
4.1 View of vehicle, front left (example) 19
4.2 View of vehicle, rear right (example) 20
5 Serial number 21
5.1 Vehicle identification number 21
5.2 Type approval label 21
5.3 Key number 21
5.4 Engine number 21
5.5 Fork part number 22
5.6 Shock absorber part number 22
6 Controls 23
6.1 Clutch lever 23
6.2 Handbrake lever 23
6.3 Throttle grip 23
6.4 Horn button 23
6.5 Light switch 24
6.6 Turn signal switch 24
6.7 Combination switch 24
6.8 Kill switch 25
6.9 Electric starter 25
6.10 Ignition and steering lock 25
6.11 ABS button 26
6.12 Seat release 26
6.13 Passenger strap 26
6.14 Passenger footpegs 26
6.15 Gear shift lever 27
6.16 Brake pedal 27
6.17 Side stand 28
6.18 Opening the fuel tank cap 28
6.19 Closing the fuel tank cap 29
7 Combination instrument 30
7.1 Dashboard 30
7.2 activation and testing 30
7.2.1 Activating the combination instrument 30
7.2.2 Display test 30
7.3 warnings 31
7.4 indicator lamps 31
7.5 Standard Display 32
7.6 Standard Reduced 33
7.7 Rally Display (optional) 33
7.8 Rally Reduced Display (optional) 33
7.9 Speed 34
7.10 speed 34
7.11 shift light 34
7.12 **Ride-Mode** display 35
7.13 time 35
7.14 coolant temperature display 36
7.15 ambient air temperature indicator 36
7.16 **Favorites** display 37
7.17 **Navigation** display (optional) 37
7.18 **Call** display 38
7.19 **Remote Control Mode** (optional) 38
7.20 Menu 39
7.20.1 Cruise control system (optional) 39
7.20.2 **Motorcycle** 41
7.20.3 Bike info 48
7.20.4 Stop navigation (optional) 51

7.20.5 audio ... 54
7.20.6 **Heating** (optional) ... 55
7.20.7 call ... 56
7.20.8 Settings ... 58

8 Preparing for use ... 70

8.1 Notes on preparing for first use ... 70
8.2 Running in the engine ... 71
8.3 Loading the vehicle ... 71
8.4 Preparing the vehicle for difficult operating conditions ... 72

9 Riding instructions ... 73

9.1 Checks and maintenance measures when preparing for use ... 73
9.2 Starting the vehicle ... 73
9.3 Starting off ... 75
9.4 Shifting, riding. ... 75
9.5 Easy Shift ... 78
9.6 Motorcycle traction control ... 78
9.7 Braking ... 79
9.8 Stop, park ... 80
9.9 Transport ... 80
9.10 Towing in the event of a breakdown ... 81
9.11 Refueling ... 81

10 Service schedule ... 83

10.1 Service schedule ... 83

11 Tuning the chassis ... 85

11.1 Fork/shock absorber ... 85
11.2 Triple clamp offset ... 85
11.3 Adjusting the compression damping of the fork ... 85
11.4 Adjusting the rebound damping of the fork ... 86
11.5 Compression damping of the shock absorber ... 86
11.6 Adjusting the low-speed compression damping of the shock absorber ... 87
11.7 Adjusting the high-speed compression damping of the shock absorber ... 87
11.8 Adjusting the rebound damping of the shock absorber ... 88
11.9 Handlebar position ... 88
11.10 Adjusting the handlebar position ... 89

12 Service work on the chassis ... 90

12.1 Raising the motorcycle with rear lifting gear ... 90
12.2 Removing the rear of the motorcycle from the lifting gear ... 90
12.3 Raising the motorcycle with a lift stand ... 90
12.4 Removing the motorcycle from the lift stand ... 91
12.5 Cleaning the dust boots of the fork legs ... 91
12.6 Removing the fork protector ... 92
12.7 Installing the fork protector ... 92
12.8 Bleeding the fork legs ... 93
12.9 Removing the seat ... 93
12.10 Mounting the seat ... 94
12.11 Removing the tool set ... 94
12.12 Storing the tool set ... 95
12.13 Take off the side cover ... 96
12.14 Mount the side cover ... 96
12.15 Removing the front top fender ... 97
12.16 Installing the front top fender ... 97
12.17 Removing the air filter ... 97
12.18 Installing the air filter ... 98
12.19 Checking the chain for dirt ... 99
12.20 Cleaning the chain ... 99
12.21 Checking the chain tension ... 100
12.22 Adjusting the chain tension ... 100
12.23 Checking the chain, rear sprocket, front sprocket, and chain guide ... 101
12.24 Adjusting the chain guide ... 104
12.25 Checking the hand grip ... 104
12.26 Adjusting the basic position of the clutch lever ... 105
12.27 Checking/correcting the fluid level of hydraulic clutch ... 105
12.28 Removing the skid plate ... 106
12.29 Installing the skid plate ... 106

13 Brake system ... 107

13.1 Anti-lock braking system ... 107
13.2 Adjusting the basic position of the hand brake lever ... 108
13.3 Checking the brake discs ... 109
13.4 Checking the brake fluid level for the front brake ... 109
13.5 Adding brake fluid for the front brake ... 110
13.6 Checking that the brake pads of the front brake are secured ... 111
13.7 Changing the brake pads of the front brake ... 112

Table of contents

13.8 Checking the free travel of the brake pedal ... 113
13.9 Adjusting the basic position of the brake pedal ... 114
13.10 Checking the brake fluid level for the rear brake ... 115
13.11 Adding brake fluid for the rear brake ... 115
13.12 Checking that the brake pads of the rear brake are secured ... 116
13.13 Changing the rear brake pads ... 117

14 Wheels, tires ... 119

14.1 Removing the front wheel ... 119
14.2 Installing the front wheel ... 120
14.3 Removing the rear wheel ... 121
14.4 Installing the rear wheel ... 122
14.5 Checking the rear hub damping rubber pieces ... 124
14.6 Checking the tire condition ... 124
14.7 Checking the tire pressure ... 126
14.8 Checking the spoke tension ... 126
14.9 Using tire repair spray ... 127

15 Electrics ... 128

15.1 Removing the 12 V battery ... 128
15.2 Installing the 12 V battery ... 128
15.3 Charging the 12 V battery ... 129
15.4 Changing the main fuse ... 131
15.5 Changing the ABS fuses ... 132
15.6 Changing the fuses of individual electrical power consumers ... 133
15.7 Removing the headlight with the headlight mask ... 135
15.8 Installing the headlight with the headlight mask ... 135
15.9 Checking the headlight setting ... 136
15.10 Adjusting the headlight range ... 137
15.11 USB socket ... 137
15.12 ACC1 and ACC2 ... 137
15.13 Diagnostic connector ... 138

16 Cooling system ... 139

16.1 Cooling system ... 139
16.2 Checking the frost protection and coolant level ... 139
16.3 Checking the coolant level ... 140
16.4 Draining the coolant ... 141
16.5 Filling/bleeding the cooling system ... 142
16.6 Changing the coolant ... 143

17 Tuning the engine ... 146

17.1 **Ride Mode** ... 146
17.2 Motorcycle traction control ... 146
17.3 slip adjustment (optional) ... 147
17.4 **Throttle Response** (optional) ... 147
17.5 Checking the basic position of the gear shift lever ... 148
17.6 Adjusting the basic position of the gear shift lever ... 148

18 Service work on the engine ... 149

18.1 Checking the engine oil level ... 149
18.2 Changing the engine oil and oil filter, cleaning the oil screens ... 149
18.3 Adding engine oil ... 152

19 Cleaning, care ... 153

19.1 Cleaning the motorcycle ... 153
19.2 Checks and maintenance steps for winter operation ... 154

20 Storage ... 156

20.1 Storage ... 156
20.2 Preparing for use after storage ... 157

21 Troubleshooting ... 158

21.1 troubleshooting ... 158

22 Technical specifications ... 160

22.1 Engine ... 160
22.1.1 Technical data of the engine ... 160
22.1.2 Coolant capacity ... 161
22.1.3 Filling quantity of engine oil ... 161
22.2 Chassis ... 161
22.2.1 Technical data - chassis ... 161
22.2.2 tires ... 162
22.2.3 Fuel tank capacity ... 162
22.3 Electrics ... 163
22.3.1 Battery ... 163
22.3.2 Fuses ... 163
22.3.3 Lamps ... 163
22.4 Fork ... 163
22.4.1 Technical data - fork ... 163
22.4.2 Fork oil capacity ... 164
22.5 Shock absorber ... 164
22.5.1 Technical data - shock absorber ... 164
22.5.2 Shock absorber oil ... 164
22.6 Tightening torque ... 165
22.6.1 Engine tightening torques ... 165
22.6.2 Chassis tightening torques ... 168

23 Declarations of conformity 175

23.1 Declarations of conformity 175
23.2 Country-specific declarations of conformity 175

Notes 177

A Technical terms 177

B Fuels 178

C Operating supplies 179

D Electrics 181

E Cleaning agents 183

F Icons 184

F.1 Symbol colors 184
F.1.1 Red symbols 184
F.1.2 Yellow and orange symbols 184
F.1.3 Green and blue symbols 184

Index 185

1.1 Conventions

1.1.1 Icons

✓	Indicates a desired result (e.g. of a work step or a function).
✗	Indicates an undesired result (e.g. of a work step or a function).
	All work marked with this symbol requires specialist knowledge and technical understanding. Ensure that this work is carried out or supervised by trained personnel from an authorized contractual partner, and that any special tools required are used.
	Indicates a page reference.
	Indicates information with more details.
	Indicates a tip, e.g. to simplify work.
»	Indicates the result from a test step.
◀	Indicates the end of an activity, including any rework.

1.1.2 Formatting

Proprietary name	Indicates a proprietary name.
Name ®	Indicates a protected name.
Brand ™	Indicates a brand available on the open market.
Underlined terms	Refer to technical details of the vehicle or indicate technical terms that are explained in the glossary.

1.1.3 Abbreviations

2-pc.	two-part
Part no.	Part number
or	respectively
approx.	circa
etc.	et cetera
poss.	possibly/possible
if necessary	if necessary
cmpl.	complete
min.	at least
no.	number
no fig.	no figure
s.	see
among others	among others/not limited to
and the like	and the like
etc.	et cetera
cf.	compare
e.g.	for example

2.1 Safety instructions

Function of the safety instruction

Safety instruction brings attention to dangers when handling the product. Hazards are classified, named, described, and supplemented with information on how to avoid them.

- If there is a safety instruction before a list of instructions, the danger exists throughout the entire activity.
- If there is a safety instruction immediately before an instruction, the next step presents a danger.

Safety instruction layout

All safety instructions are identified by a signal word and a warning symbol. The combination of signal word and warning symbol determines the degree of danger.

DANGER
Indicates an imminent danger that leads to serious injury or death.

WARNING
Indicates a potentially imminent danger that could lead to serious injury or death.

CAUTION
Indicates a potentially imminent danger that can lead to minor or slight injuries.

NOTE
Indicates a situation that can lead to damage to the product or the product environment.

NOTE
Indicates a situation that can lead to environmental damage.

2.2 Reporting safety defects

If you believe that your vehicle has a defect which could cause an accident resulting in injury or death, you should immediately inform the National Highway Traffic Safety Administration (NHTSA) in addition to notifying Husqvarna Mobility North America, Inc.

If the NHTSA receives multiple similar complaints, it may open an investigation. and if it finds that a safety defect exists in a group of vehicles, it may order a recall and remedy campaign. However, NHTSA cannot become involved in individual problems between you, your contracting party, or Husqvarna Mobility North America, Inc.

You can contact the NHTSA via the toll-free “Auto Safety Hotline” on 1–888–327–4236, visit the www.nhtsa.dot.gov website, or write to: NHTSA Headquarters, 1200 New Jersey Avenue, SE, West Building, Washington, DC 20590, USA. You can also obtain other information about motor vehicle safety from the hotline.

2.3 Noise emission warranty

Husqvarna Mobility warrants that this exhaust system, at the time of sale, meets all applicable U.S. EPA Federal noise standards.

This manufacturer’s warranty extends to the first person who purchases this exhaust system for purposes other than resale, and to all subsequent buyers.

Warranty claims should be directed to:

Husqvarna Mobility North America, Inc., c/o KTM North America, Inc., Customer Support, 1119 Milan Ave., Amherst, OH 44001, USA

Phone: (440) 985–3553

www.ktmusa.com

Husqvarna Mobility Canada, Inc., Customer Support, 8701 Rue Samuel-Hatt, Chambly, QC J3L 6V4, Canada

Phone: (450) 441–4451

www.ktmcanada.com

2.4 Operating noise warning

This product should be checked for necessary repair or replacement parts if the motorcycle noise has increased significantly through use. Otherwise, the owner may become subject to penalties under the applicable ordinances.

2.5 Manufacturer warranty for the exhaust monitoring system

Husqvarna Mobility North America, Inc., c/o KTM Canada, Inc., 8701 Rue Samuel-Hatt, Chambly, QC J3L 6V4, Canada warrants that, at the time of sale, the exhaust monitoring system meets all applicable standards set by the US Environmental Protection Authority (EPA) and the California Air Resources Board (CARB).

This manufacturer warranty applies in respect of the first owner of the motorcycle and all subsequent owners.

Your exhaust monitoring system may include parts, such as the fuel injection system, ignition, catalytic converter, control units, hoses, connectors and other emission related assemblies, fuel tank, crankcase breather, fuel tank lid for vehicles with fuel evaporation monitoring, oil filler cap, pressure control valve, fuel/vapor separator, canister, ignition coils, ignition wire, capacitors and spark plugs, if a fault occurs before the first scheduled replacement; it may also include the hoses, fittings, and pipes that are used directly in these components.

If the warranty conditions are met, Husqvarna Mobility will repair your motorcycle for you free of charge, including diagnosis, parts and labor.

As the owner of the motorcycle, you are responsible for the required maintenance specified in the Owner's Manual.

Please note that Husqvarna Mobility is entitled to reject warranty claims if your motorcycle or a part fails due to misuse, negligence, an accident, participation in racing or similar events, improper service work, or unauthorized modifications.

Scope of the manufacturer's warranty

- Five (5) years or 30,000 kilometers (18,641 miles), whichever occurs first.

If you have any questions regarding the manufacturer warranty for the exhaust monitoring system, please address these to:

Husqvarna Mobility North America, Inc., c/o KTM North America, Inc., Customer Support, 1119 Milan Ave., Amherst, OH 44001, USA

Phone: (888) 985-6090

U.S. Environmental Protection Agency, 2000 Traverwood Drive, Ann Arbor, MI 48105, USA

California Air Resources Board, 1001 "I" Street, Sacramento, CA 95814, USA

2.6 Consumer rights

Warranty claims must be made to an authorized dealer. If you are not satisfied, please contact:

Husqvarna Mobility North America, Inc., c/o KTM North America, Inc., Customer Support, 1119 Milan Ave., Amherst, OH 44001, USA

Phone: (440) 985–3553

www.ktmusa.com

Husqvarna Mobility Canada, Inc., Customer Support, 8701 Rue Samuel-Hatt, Chambly, QC J3L 6V4, Canada

Phone: (450) 441–4451

www.ktmcanada.com

Different rights may apply, according to national or regional legislation.

2.7 Ban on tampering

No changes may be made to the noise control equipment and components.

Tampering that is prohibited

- Removing or disabling any devices or components used for noise control before the new vehicle is sold or delivered to the end customer.
- Removing or disabling any device or component used for noise control for purposes other than service, repair, or replacement during the service life of the vehicle.
- Use of the vehicle after a device or component used for noise control has been removed, disabled, or inadequately maintained.

Examples of prohibited tampering

- Removing or drilling through rear mufflers, baffle plates, manifolds, or other components that conduct exhaust gases.
- Removing or puncturing parts of the intake system.
- Replacing moving parts of the vehicle, or parts of the exhaust system or intake system, with parts other than those specified by the manufacturer.

2.8 Safe use

DANGER

Danger of accidents A rider who is not fit to ride poses a danger to themself and to others.

– Do not operate the vehicle if you are not fit to ride due to alcohol, drugs, or medication.
– Do not operate the vehicle if you are physically or mentally incapable of doing so.

DANGER

Danger of poisoning Exhaust gases are toxic and inhaling them may result in unconsciousness and death.

– Always ensure that there is sufficient ventilation when running the engine.
– Use suitable exhaust extraction when starting or running the engine in an enclosed space.

WARNING

Danger of burns Some vehicle components become hot when the vehicle is operated.

– Do not touch any parts such as the exhaust system, radiator, engine, damper, or brake system before the vehicle parts have cooled down.
– Allow the vehicle parts to cool down before performing any work on the vehicle.

The vehicle should only be used when it is in perfect technical condition, for its intended purpose, and in a safe and environmentally-friendly manner.

An appropriate driver's license is needed to drive the vehicle on public roads.

Have any faults that impair safety immediately remedied by an authorized contractual partner.

Adhere to the information and warning labels on the vehicle.

2.9 Protective clothing

WARNING

Risk of injury Missing or inadequate protective clothing increases the risk of injury.

– Wear appropriate protective clothing such as helmet, boots, gloves as well as pants and a jacket with protectors on all rides.
– Always wear protective clothing that is in good condition and meets the legal regulations.

In the interest of your own safety, Husqvarna Mobility recommends that you only operate the vehicle while wearing protective clothing.

2.10 Work rules

Unless specified otherwise, the ignition must be switched off during all work (models with ignition lock, models with transponder key) or the engine must be at a standstill (models without ignition lock or transponder key).

Special tools are required for some work. The tools are not part of the vehicle, but can be ordered using the number in parentheses. Example: bearing puller (15112017000)

Unless otherwise noted, normal conditions apply to all tasks and descriptions.

Ambient temperature	20 °C (68.0 °F)
Ambient air pressure	1,013 mbar (14.69 psi)
Relative air humidity	60 ±5 %

During assembly, use new parts to replace parts which cannot be reused (e.g. self-locking screws and nuts, expansion screws, seals, sealing rings, O-rings, pins, and lock washers).

A thread lock (e.g. **Loctite®**) is required for some screw connections. Observe the manufacturer's specific instructions for use.

If thread lock (e.g. **Precote®**) has already been applied to a new part, do not apply any additional thread lock.

After disassembly, clean the parts that are to be reused and check them for damage and wear. Replace damaged or worn parts.

After completing a repair or service, check the operating safety of the vehicle.

2.11 Environment

Handling the vehicle responsibly reduces the risk of conflict with other road users and the surrounding area. The future of motorcycling also depends on using motorcycles legally, being environmentally conscious and respecting the rights of others.

When disposing of used oil, other operating and auxiliary fluids, and used components, the laws and regulations of the respective country must be observed.

As motorcycles are not subject to the EU regulations governing the disposal of end-of-life vehicles, there are no legal regulations that pertain to the disposal of an end-of-life motorcycle. More information is available from the authorized contractual partner.

2.12 Owner's manual

Read this owner's manual carefully and in full before riding off for the first time. The owner's manual contains information and tips on how to operate, handle, and service your vehicle, as well as advice on optimum tuning and how to avoid injuries.

Tip

Save this owner's manual on your smartphone, for example, so that you can access it at any time.

An authorized contractual partner will be happy to assist you if you are unsure.

The owner's manual is an important component of the vehicle. If the vehicle is sold, the owner's manual must be downloaded again by the new owner.

The owner's manual can be downloaded multiple times using the QR code or the link on the delivery certificate.

The owner's manual is also available for download from authorized contractual partners and on the Husqvarna Mobility website.

International Husqvarna Mobility website: https://www.husqvarna-motorcycles.com

A printed copy can be ordered from the following address.

Website for printed copy: https://print.ktm.com

2.13 Use definition – intended use

The vehicle is designed and constructed to withstand the usual demands of regular traffic and use on gentle terrain (unpaved roads).
This vehicle is not suitable for use on race tracks.

Note
This vehicle is only authorized for operation on public roads in its homologated version.
When used in a dusty environment, it may be necessary to use air filter protection. Your authorized contractual partner will be happy to advise you.

2.14 Improper use

The vehicle may only be used as intended.
Improper use can result in danger to people, property and the environment.
Any use of the vehicle beyond the intended and defined use constitutes misuse.
Improper use includes the use of operating and auxiliary materials that do not meet the required specifications for the respective use.

2.15 Safety markings on the motorcycle

2.15.1 Overview of labels

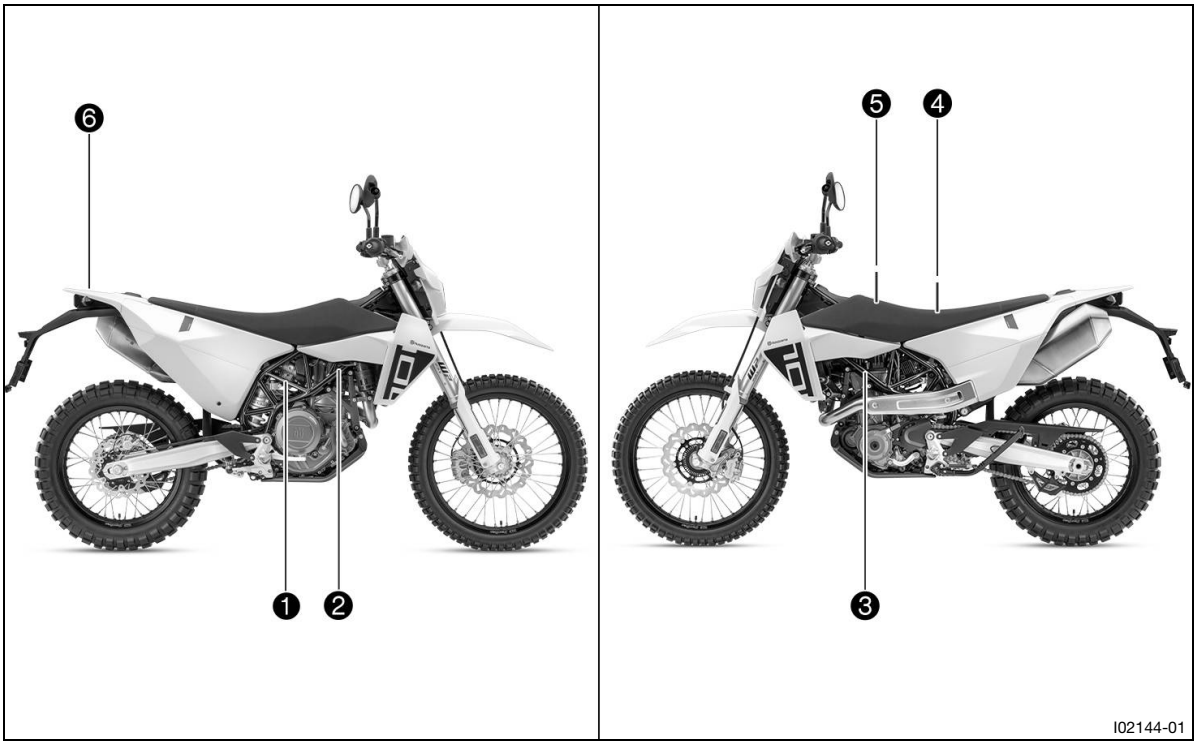

❶ Type label for Canada
❶ Type label for USA
❷ Information on emissions control
❸ Information on noise emissions
❹ Information on suspension setting
❺ Information on chain tension
❻ Information on preparations for use

2.15.2 Label in detail

Information on preparations for use

Type approval label for CAN/USA

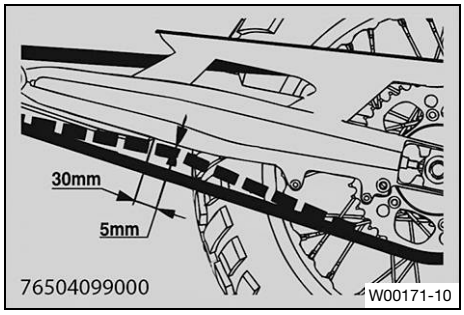

Chain tension

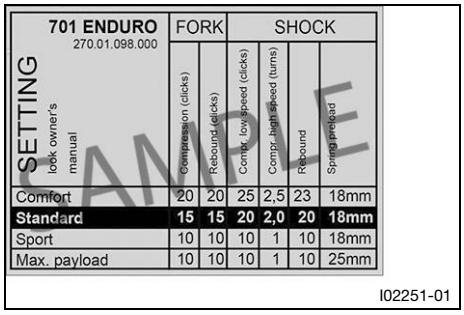

Information on suspension setting

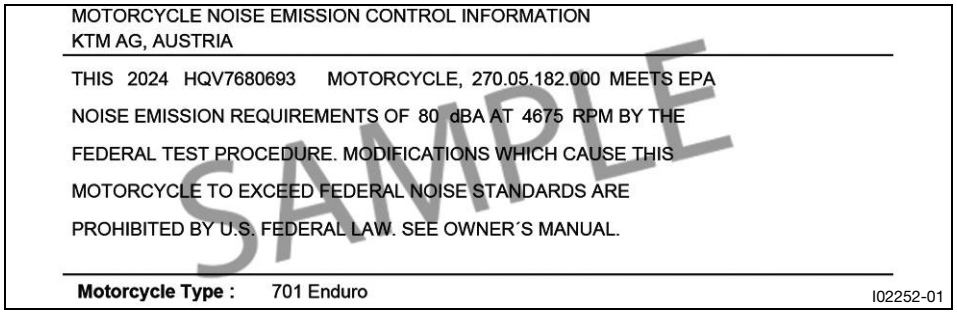

Information on noise emissions

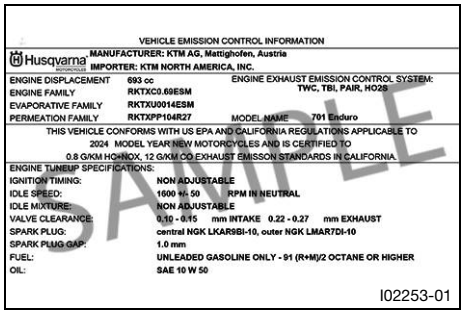

VEHICLE EMISSION CONTROL INFORMATION

Husqvarna MOTORCYCLES MANUFACTURER: KTM AG, Mattighofen, Austria
IMPORTER: KTM NORTH AMERICA, INC.

ENGINE DISPLACEMENT	693 cc	ENGINE EXHAUST EMISSION CONTROL SYSTEM:	TWC, TBI, PAIR, HO2S
ENGINE FAMILY	RKTXC0.69ESM		
EVAPORATIVE FAMILY	RKTXU0014ESM		
PERMEATION FAMILY	RKTXPP104R27	MODEL NAME	701 Enduro

THIS VEHICLE CONFORMS WITH US EPA AND CALIFORNIA REGULATIONS APPLICABLE TO
2024 MODEL YEAR NEW MOTORCYCLES AND IS CERTIFIED TO
0.8 G/KM HC+NOX, 12 G/KM CO EXHAUST EMISSION STANDARDS IN CALIFORNIA.

ENGINE TUNEUP SPECIFICATIONS:

IGNITION TIMING:	NON ADJUSTABLE
IDLE SPEED:	1500 +/- 50 RPM IN NEUTRAL
IDLE MIXTURE:	NON ADJUSTABLE
VALVE CLEARANCE:	0.10 - 0.15 mm INTAKE 0.22 - 0.27 mm EXHAUST
SPARK PLUG:	central NGK LKAR9BI-10, outer NGK LMAR7DI-10
SPARK PLUG GAP:	1.0 mm
FUEL:	UNLEADED GASOLINE ONLY - 91 (R+M)/2 OCTANE OR HIGHER
OIL:	SAE 10 W 50

SAMPLE

I02253-01

Information on emissions control

3.1 Manufacturer's warranty, implied warranty

The work prescribed in the service schedule must only be carried out by an authorized contractual partner and then confirmed in the electronic proof of service, as otherwise all warranty claims will be void. Damage or secondary damage caused by tampering with and/or conversions on the vehicle are not covered by the manufacturer's warranty.

3.2 Auxiliary material, operating material

Use operating materials and auxiliary materials in accordance with the operating instructions and specifications.

3.3 Spare parts, accessories

For safety reasons, only spare parts and accessory products approved by Husqvarna Mobility may be used. They may only be installed by an authorized contractual partner. Husqvarna Mobility accepts no liability for other products and any resulting damage or loss.

Certain spare parts and accessory products are specified in parentheses in the descriptions. Authorized contractual partners will be happy to help.

You can find current accessories for your vehicle on the Husqvarna Mobility website.

International Husqvarna Mobility website: https://www.husqvarna-motorcycles.com

3.4 Service

A prerequisite for perfect operation and prevention of premature wear is that the service, care, and tuning work is properly carried out as described in the owner's manual. An incorrect suspension setting can lead to damage and breakage of chassis components.

Use of the vehicle under difficult conditions, such as dusty environments, heavy rain, high heat or with a heavy load, can lead to increased wear of components such as the air filter, powertrain, brake systems, or suspension components. For this reason, it may be necessary to inspect or replace components before the next scheduled service interval.

The prescribed running-in times and service intervals must be observed, otherwise the long-term durability of the vehicle will be severely impaired.

The relevant mileage or time interval is whichever occurs first.

A list of services that have already been carried out on the vehicle can be found in the Service area on the international Husqvarna Mobility website:

International Husqvarna Mobility website: https://www.husqvarna-motorcycles.com

Authorized contractual partners will be happy to answer any questions regarding the services performed.

The list of authorized contractual partners is available on the Husqvarna Mobility website.

3.5 Figures

Some of the figures in this document contain optional extras.

For clarity, some components may be shown disassembled or may not be shown at all. Disassembly is not always absolutely necessary in order to carry out the activities described. The textual information takes precedence.

3.6 Customer service

Your authorized partner will be happy to answer any questions you may have regarding your vehicle or about Husqvarna Mobility.

You can find the list of authorized contractual partners on the Husqvarna Mobility website.

International Husqvarna Mobility website: https://www.husqvarna-motorcycles.com

4.1 View of vehicle, front left (example)

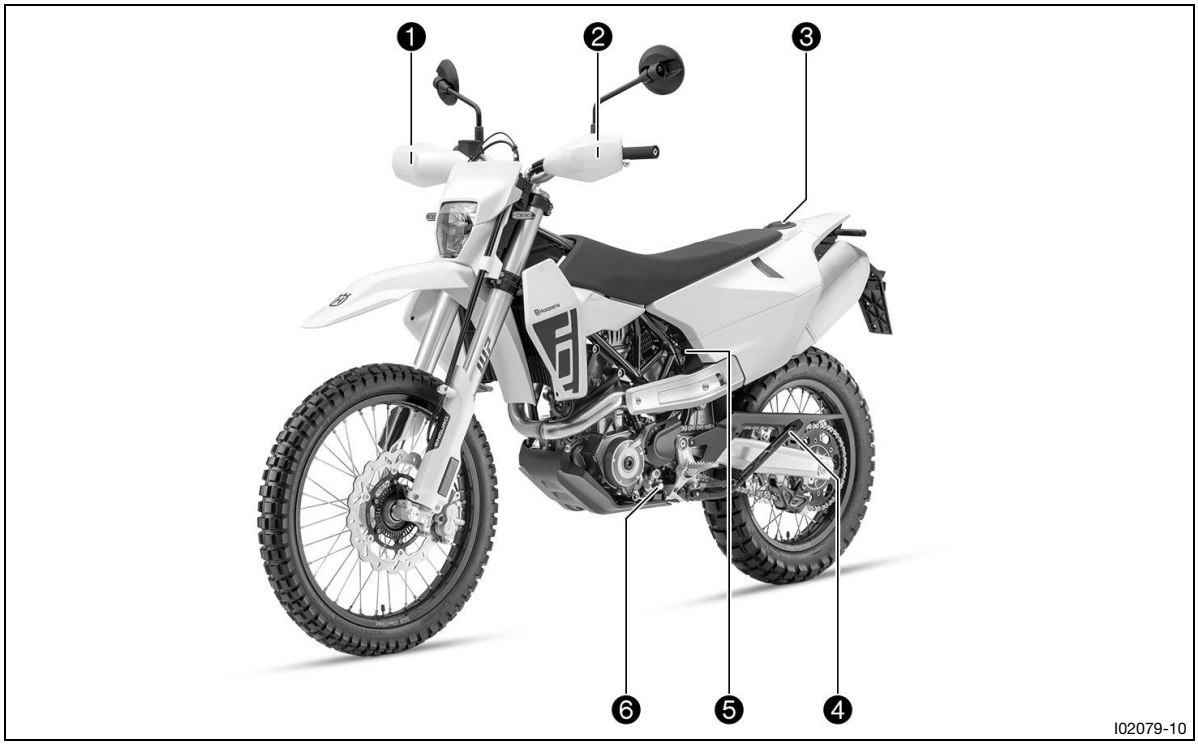

1. Handbrake lever (p. 23)
2. Clutch lever (p. 23)
3. Fuel tank cap
3. Seat release (p. 26)
4. Side stand (p. 28)
5. Compression damping of the shock absorber (p. 86)
6. Gear shift lever (p. 27)

4.2 View of vehicle, rear right (example)

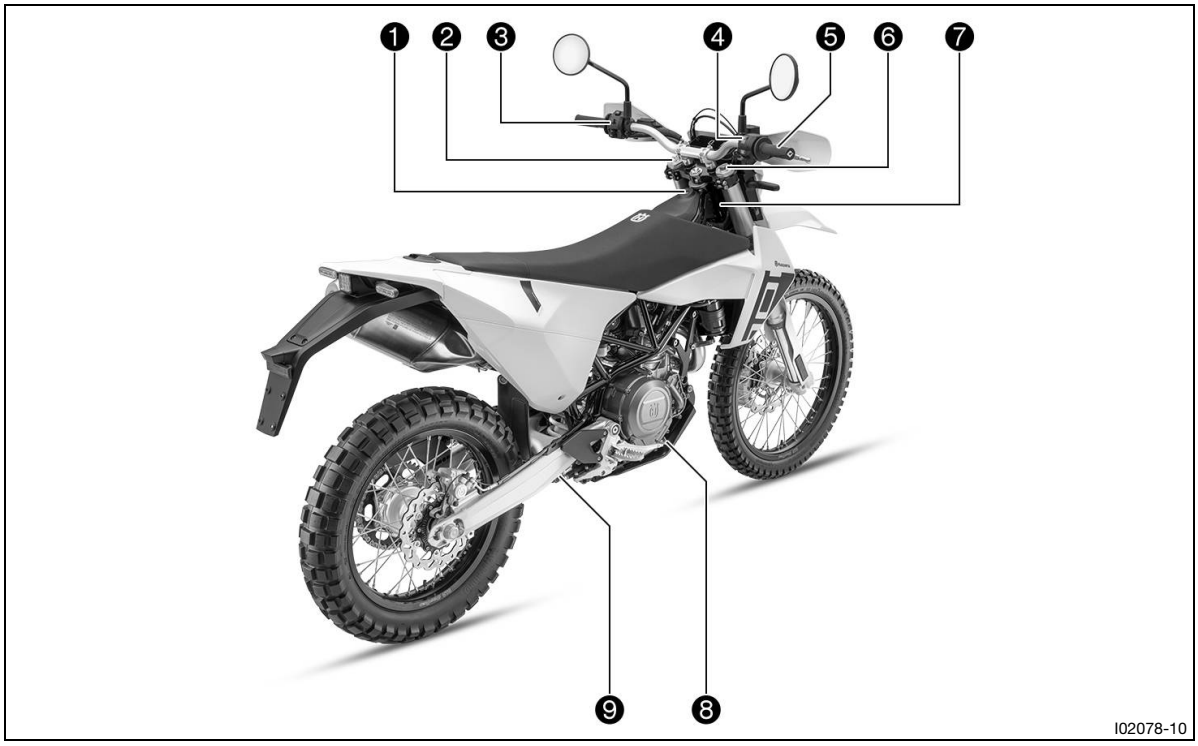

1. Ignition and steering lock (p. 25)
2. Fork compression adjustment
3. Light switch (p. 24)
3. Turn signal switch (p. 24)
3. Horn button (p. 23)
4. Kill switch (p. 25)
4. Electric starter (p. 25)
5. Throttle grip (p. 23)
6. Fork rebound adjustment
7. Vehicle identification number (p. 21)
8. Brake pedal (p. 27)
9. Shock absorber rebound adjustment

5.1 Vehicle identification number

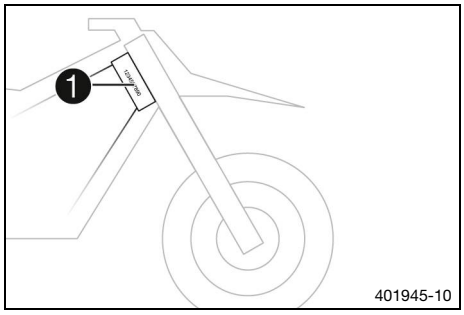

The vehicle identification number ❶ is stamped on the right-hand side of the steering head.

5.2 Type approval label

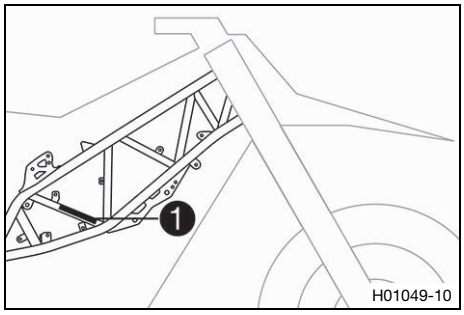

Type label ❶ is applied to the right frame tube.

5.3 Key number

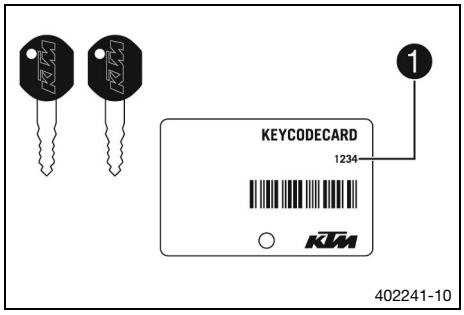

The key number ❶ can be found on the KEYCODECARD.

Note
The key number is required to order a spare key and should therefore be kept in a safe place.

5.4 Engine number

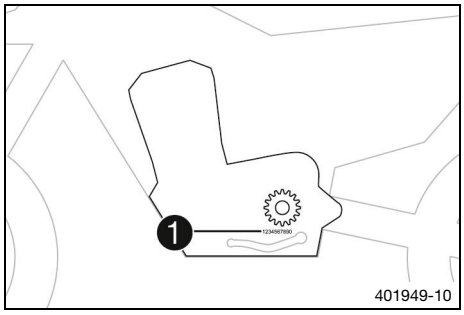

The engine number ❶ is located on the left side of the engine under the engine sprocket.

5.5 Fork part number

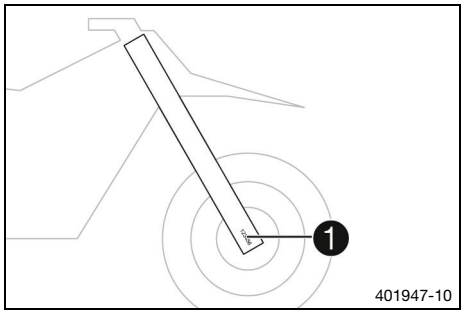

Fork part number ❶ is stamped on the inside of the fork shoe.

5.6 Shock absorber part number

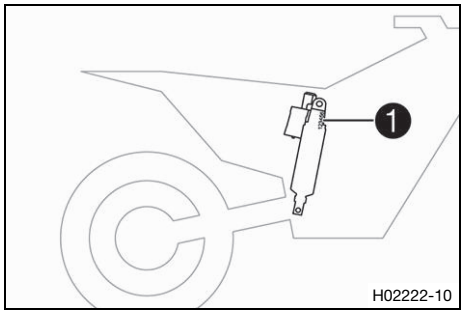

Shock absorber part number ❶ is stamped on the top of the shock absorber.

6.1 Clutch lever

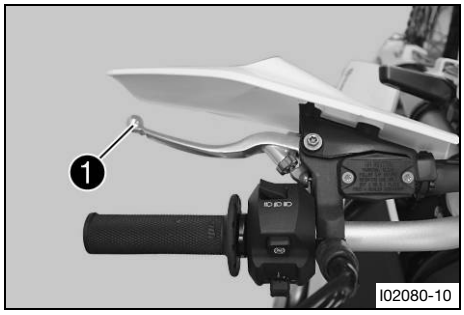

Clutch lever ❶ is fitted on the left side of the handlebar.
The clutch is activated hydraulically and adjusts itself automatically.

6.2 Handbrake lever

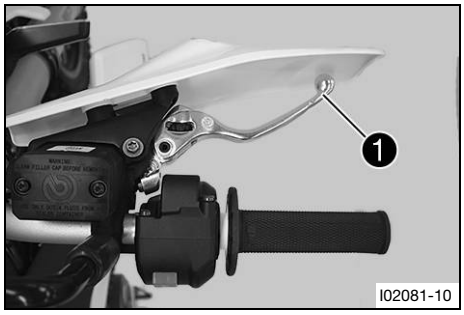

Hand brake lever ❶ is fitted on the right side of the handlebar.
The front brake is engaged using the hand brake lever.

6.3 Throttle grip

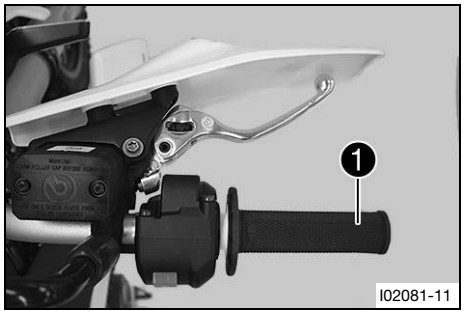

The throttle twist grip ❶ is fitted on the right side of the handlebar.

6.4 Horn button

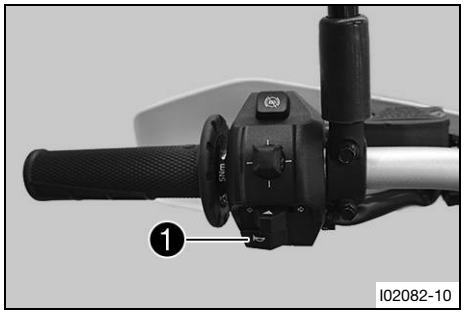

Horn button ❶ is fitted on the left side of the handlebar.

Condition	Meaning
Horn button in the basic position	No function
Horn button pressed.	The horn is operated in this position.

6.5 Light switch

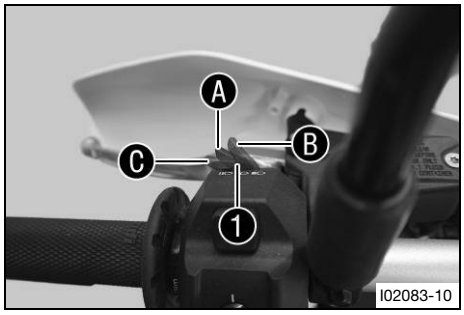

Light switch ❶ is fitted on the left side of the handlebar.

Condition		Meaning
	Light switch in position Ⓐ.	In this position, the low beam and the tail light are switched on.
	Light switch in position Ⓑ.	In this position, the high beam and the tail light are switched on.
	Light switch in position Ⓒ.	The headlight flasher is operated in this position.

6.6 Turn signal switch

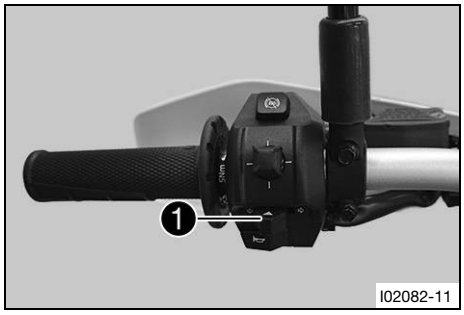

Turn signal switch ❶ is fitted on the left side of the handlebar.

Condition		Meaning
	Turn signal switch pressed to the left.	Left turn signal, on
	Turn signal switch pressed to the right.	Right turn signal, on

To switch off the turn signal, press the turn signal switch towards the switch case.

Note

If the turn signal has been on for at least 10 seconds and the vehicle has traveled 150 meters, the turn signal is automatically switched off by a software function (**ATIR**).

If the vehicle is stationary, both counters are stopped.

If the turn signal switch is reactivated, both counters are reset.

6.7 Combination switch

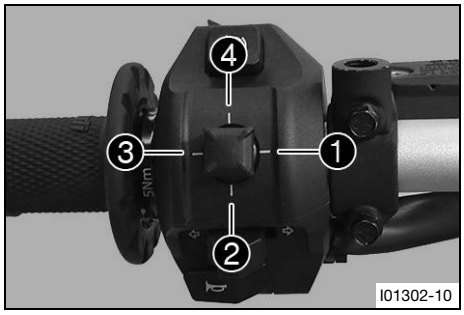

The menu buttons are fitted in the middle of the left combination switch.

The menu buttons are used to control the display on the combination instrument.

Button ❶ is the **RIGHT** button.

Button ❷ is the **DOWN** button.

Button ❸ is the **LEFT** button.

Button ❹ is the **UP** button.

6.8 Kill switch

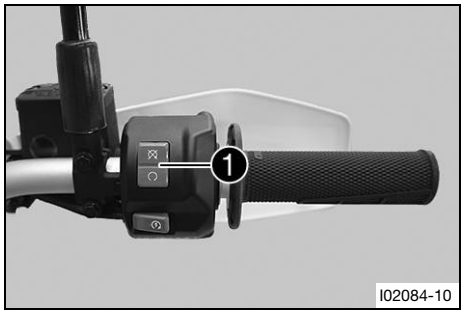

The emergency OFF switch ❶ is fitted on the right side of the handlebar.

Condition		Meaning
	Emergency OFF switch off	In this position, the ignition circuit is interrupted, a running engine stops, and cannot be started.
	Emergency OFF switch on	This position is required for operation; the ignition circuit is closed.

6.9 Electric starter

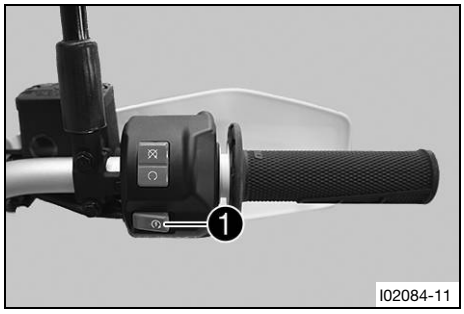

Electric starter ❶ is fitted on the right side of the handlebar.

Condition		Meaning
	Electric starter in the basic position	No function
	Electric starter pressed	In this position, the starter motor is actuated.

6.10 Ignition and steering lock

The ignition and steering lock is located in front of the seat.

Condition		Meaning
	Ignition off	In this position, the ignition circuit is interrupted, a running engine stops, and an engine at a standstill will not start. The ignition key can be removed.
	Ignition on	In this position, the ignition circuit is closed, and the engine can be started.
	Steering locked	In this position, the ignition circuit is interrupted and the steering locked. The ignition key can be removed.

6.11 ABS button

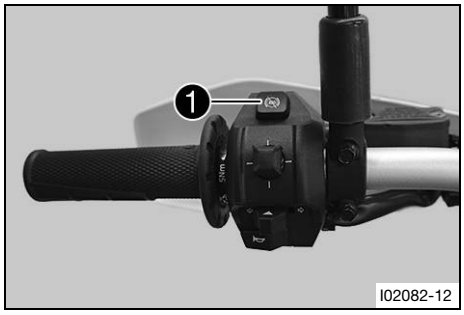

The ABS button ❶ is fitted on the left side of the handlebar.
The ABS can be disabled using the ABS button ❶.

6.12 Seat release

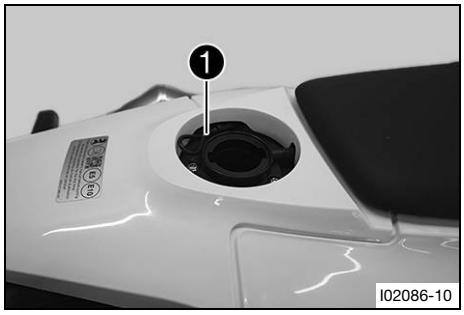

The loop ❶ for unlocking the seat is located under the fuel tank cap.

6.13 Passenger strap

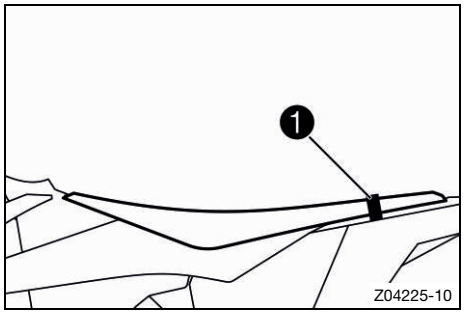

Supporting strap ❶ is used for maneuvering the motorcycle.
If you carry a passenger, the passenger can hold onto the grab handles during the trip.

6.14 Passenger footpegs

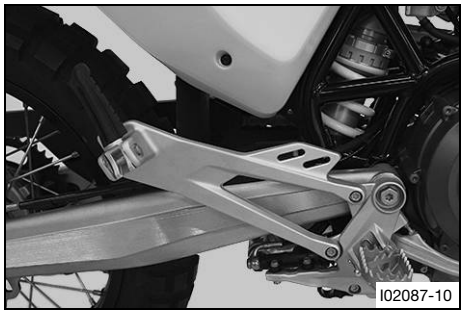

The passenger foot pegs can be folded up and down.

Condition	Meaning
Passenger foot pegs folded up	For use without a passenger
Passenger foot pegs folded down	For use with a passenger

6.15 Gear shift lever

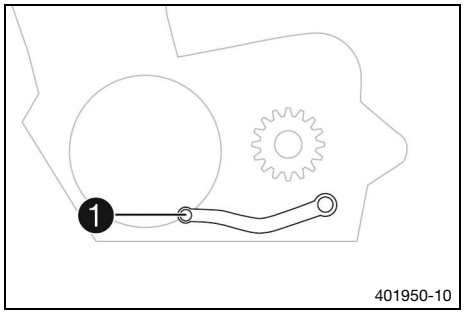

Gear shift lever ❶ is mounted on the left of the engine.

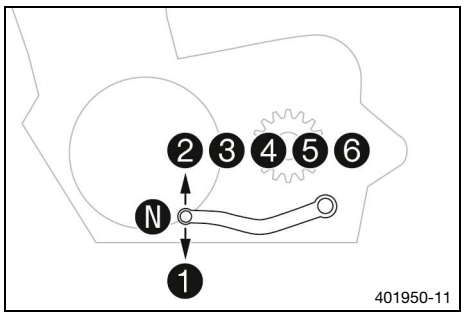

The gear positions can be seen in the figure.
The neutral or idle position is between the first and second gears.

6.16 Brake pedal

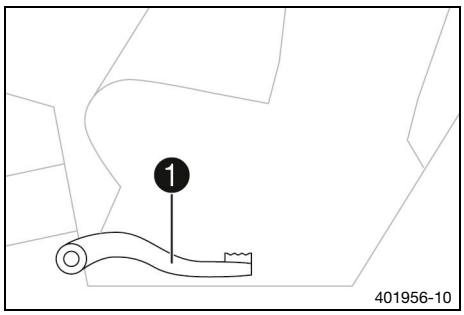

Brake pedal ❶ is located in front of the right footpeg.
The rear brake is operated with the brake pedal.

6.17 Side stand

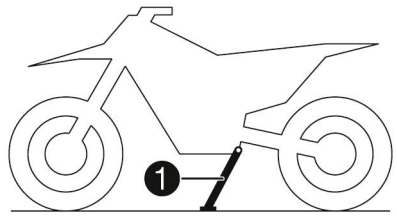

401943-10

The side stand ❶ is located on the left of the vehicle.
The side stand is used for parking the motorcycle.

Note
The side stand must be folded up during use.
The side stand is coupled with the safety starting system; follow the riding instructions.

Condition	Meaning
Side stand folded out	The vehicle can be supported on the side stand. The safety starting system is active.
Side stand folded in	This position is mandatory when riding the motorcycle. The safety starting system is inactive.

6.18 Opening the fuel tank cap

DANGER
Fire hazard Fuel is highly flammable.
The fuel in the fuel tank expands when warm and can escape if overfilled.
– Do not refuel the vehicle in the vicinity of open flames, glowing, or smoldering objects.
– Make sure that nobody smokes in the vicinity of the vehicle during the refueling process.
– Switch off the engine for refueling.
– Make sure that no fuel is spilled; particularly not on hot parts of the vehicle.
– If any fuel is spilled, wipe it up immediately.
– Do not overfill the fuel tank.

WARNING
Danger of poisoning Fuel is harmful to health.
– Do not allow fuel to come into contact with skin, eyes, or clothing.
– Consult a doctor immediately if fuel has been ingested.
– Do not inhale fuel vapors.
– Rinse the affected area immediately with plenty of water in the event of contact with skin.
– Rinse eyes thoroughly with water and consult a doctor immediately if fuel comes into contact with eyes.
– If fuel spills on to your clothing, change the clothing.
– Store fuel properly in a suitable container and keep out of the reach of children.

NOTE
Environmental hazard Improper handling of fuel is dangerous to the environment.
– Do not allow fuel to enter the groundwater, the soil, or the sewage system.

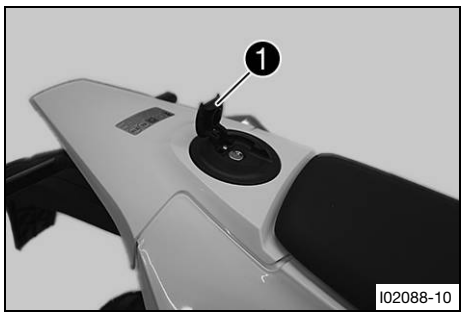

– Lift cover ❶ of fuel tank filler cap and insert the ignition key.
– Turn the ignition key 90° counterclockwise and take off the fuel tank filler cap.

Note
The fuel tank filler cap has a fuel tank breather.

6.19 Closing the fuel tank cap

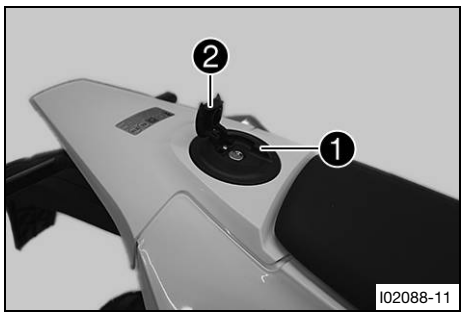

– Put the fuel tank cap ❶ back on and turn the ignition key 90° clockwise.
– Remove the ignition key and close the cover ❷.

7.1 Dashboard

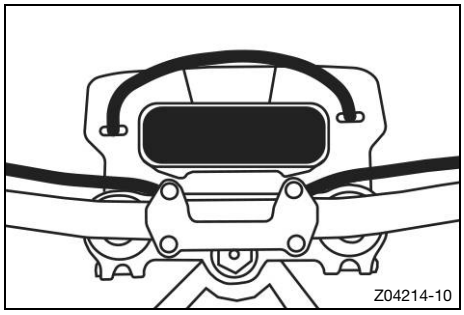

The combination instrument is attached in front of the handlebar.

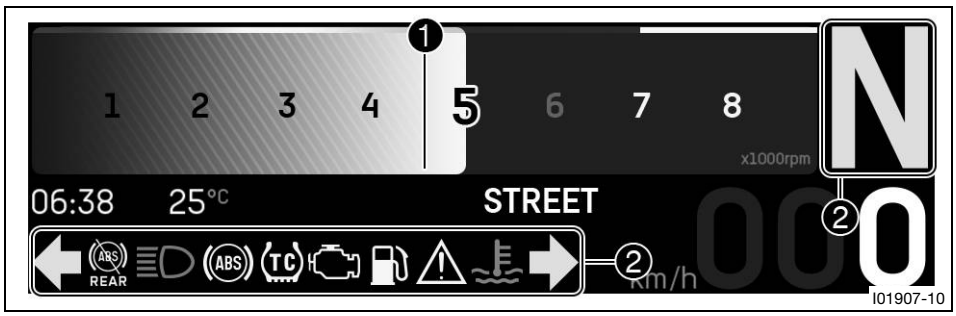

The combination instrument is divided into two function areas.

Display ❶
❷ indicator lamps (p. 31)

7.2 activation and testing

7.2.1 Activating the combination instrument

The dashboard is switched on with the ignition.

7.2.2 Display test

The welcome text appears on the display and all the indicator lights are briefly activated for a function check.

Note

The malfunction indicator lamp always lights up as long as the engine is not running. If the engine is running and the failure indicator light lights up, stop (taking care not to endanger yourself or other road users in the process) and contact an authorized dealer.

7.3 warnings

Warnings appear in the middle of the display; these are marked yellow or red depending on their relevance.
Yellow warnings indicate a malfunction or information which requires prompt intervention or an adjustment to the riding style.

Red warnings indicate a malfunction or information which requires immediate intervention.

Note
Warnings can be hidden by pressing any button.
All the existing warnings are displayed in the **Warning** submenu until they are no longer active.

7.4 indicator lamps

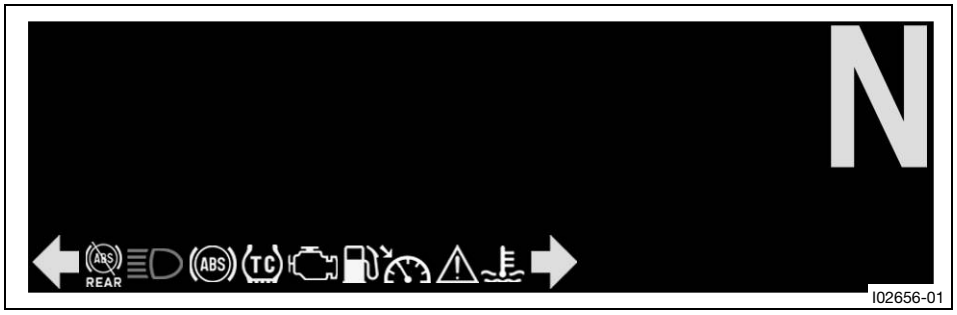

The indicator lamps offer additional information about the operating state of the motorcycle.
When the ignition is switched on, all indicator lamps light up briefly.

Note
The malfunction indicator lamp always lights up as long as the engine is not running. If the engine is running and the failure indicator light lights up, stop (taking care not to endanger yourself or other road users in the process) and contact an authorized dealer.
The ABS warning lamp lights up until a speed of approx. 6 km/h (approx. 4 mph) or more has been reached.

Condition		Meaning
	The turn signal indicator light flashes green with a steady blinking interval	The turn signal is switched on.
	The **OBD** failure indicator light lights up yellow.	The **OBD** has detected a malfunction in the vehicle electronics. Come safely to a halt, and contact an authorized dealer.
	The ABS warning lamp lights up yellow	Status or error messages relating to **ABS**.
	The ABS rear warning light lights up yellow	**ABS** is deactivated on the rear wheel.
	The idle indicator lamp lights up green	The transmission is in the neutral position.
	TC indicator lamp lights up/flashes yellow	**MTC** is not active or is currently regulating. The TC indicator lamp also lights up if a malfunction is detected. Contact an authorized contractual partner. The TC indicator lamp flashes if **MTC** makes an active intervention.
	The high beam indicator lamp lights up blue	The high beam is switched on.
	General warning light lights up yellow	A note/warning note on operating safety has been detected. This is also shown in the display.
	The fuel level warning lamp lights up yellow	The fuel level has reached the reserve mark.
	Coolant temperature indicator lamp lights up blue	The engine is cold.
	Coolant temperature indicator lamp lights up red	Engine is hot.
	The cruise control system indicator lamp (optional) lights up yellow	The cruise control system function is switched on, but cruise control is not activated.
	The cruise control system indicator lamp (optional) lights up green	The cruise control system function is switched on and cruise control is activated.

7.5 Standard Display

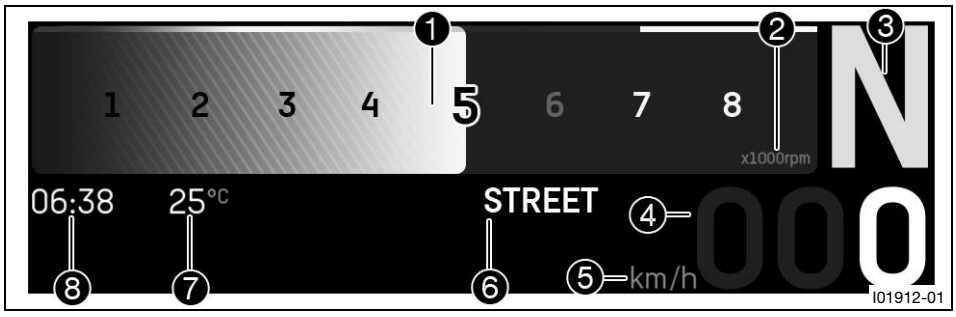

❶ speed (p. 34)

❶ shift light (p. 34)
The shift light is integrated in the rpm gauge display.

❷ Unit for the engine speed display

❸ Gear display

❹ Speed (p. 34)

❺ Unit for the speed

❻ **Ride-Mode** display (p. 35)

❼ ambient air temperature indicator (p. 36)
❽ time (p. 35)

7.6 Standard Reduced

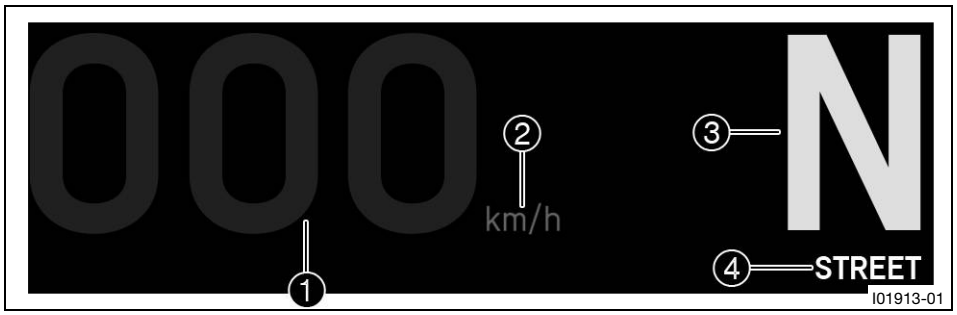

❶ Speed (p. 34)
❷ Unit of speed
❸ Gear display
❹ **Ride-Mode** display (p. 35)

7.7 Rally Display (optional)

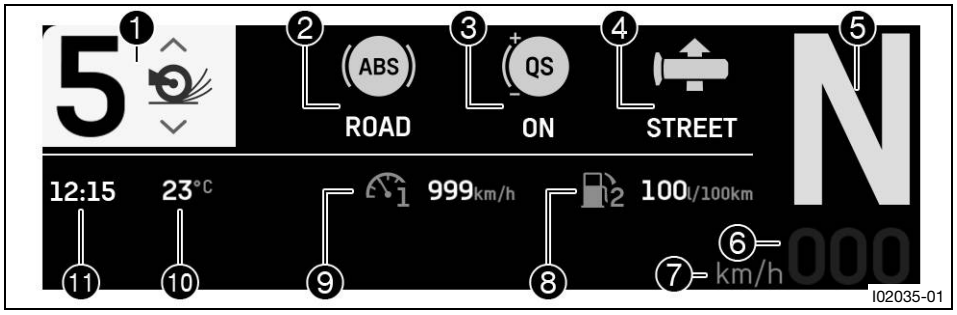

❶ Spin Adjuster (optional)
❷ ABS Mode
❸ Easy Shift
❹ Throttle Response (optional)
❺ Gear display
❻ Speed (p. 34)
❼ Unit of speed
❽ Favorites 2
❾ Favorites 1
❿ ambient air temperature indicator (p. 36)
⓫ time (p. 35)

7.8 Rally Reduced Display (optional)

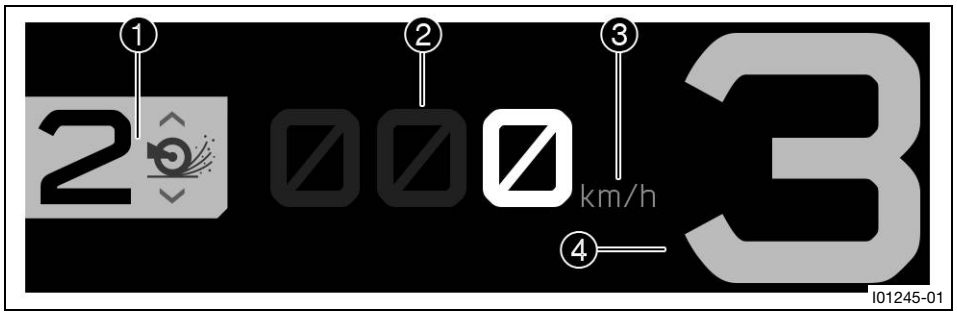

❶ Spin Adjuster (optional)
❷ Speed (p. 34)
❸ Unit of speed
❹ Gear display

7.9 Speed

The speed is shown in area ❶ of the display.
Speed ❶ is shown in kilometers per hour **km/h** or in miles per hour **mph**.
The unit of speed can be configured in the **Distance** submenu.

7.10 speed

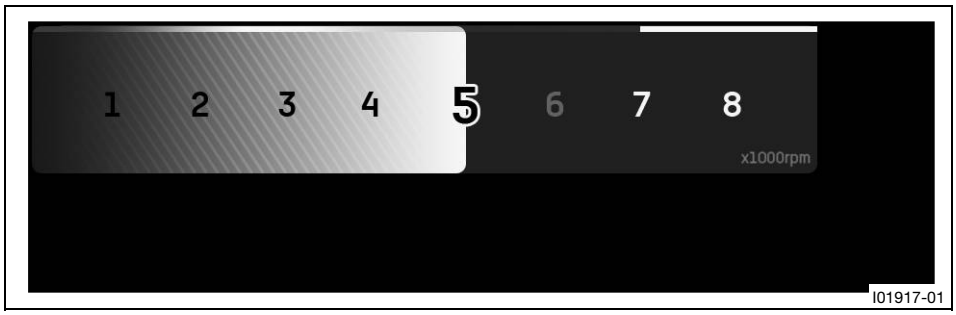

The engine speed is displayed in revolutions per minute.

7.11 shift light

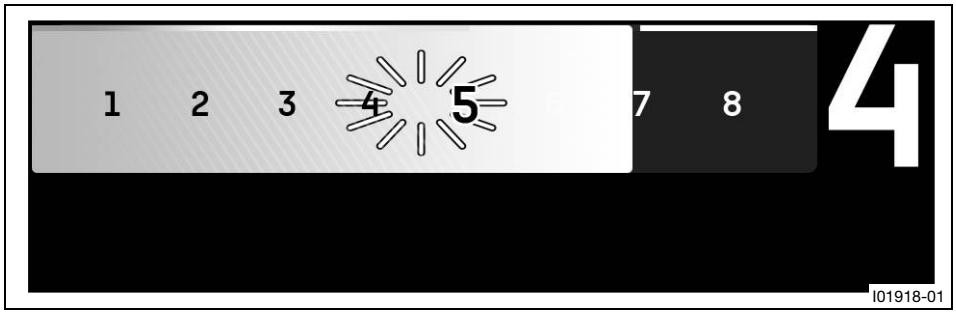

The shift light is integrated in the rpm gauge display.

In the **Shift Light** submenu, the engine speed for the shift warning light can be set. During the run-in time (up to 1000 km / 621 miles), the shift light is always active. The shift warning light can only be deactivated, and the values for **RPM1** and **RPM2** can only be adjusted after this. In **RPM1** the shift warning light flashes and in **RPM2** it flashes and the color changes.

Note
After the first service, the shift warning light is deactivated when the engine is warm and in sixth-gear.

Coolant temperature	≤ 35 °C (≤ 95.0 °F)
ODO	< 1,000 km (< 621.4 mi)
The shift warning light always flashes at	6,500 rpm (108.33 Hz)

Coolant temperature	> 35 °C (> 95.0 °F)
ODO	> 1,000 km (> 621.4 mi)
RPM1 shift warning light	flashes
RPM2 shift warning light	flashes and changes color

7.12 Ride-Mode display

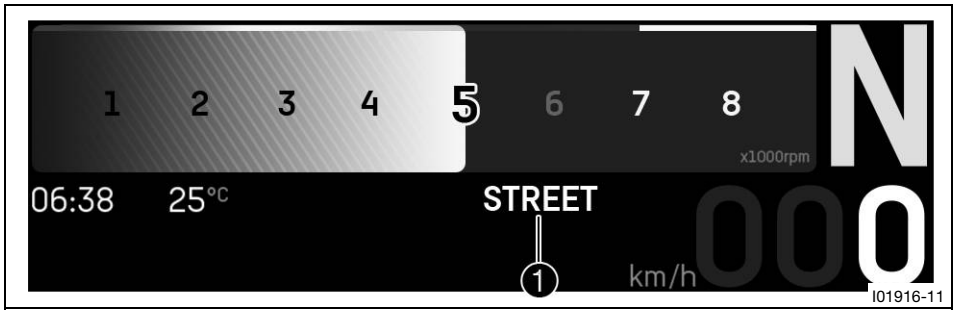

The **Ride Mode** (p. 146) setting is shown in area ❶ of the display.
The drive mode can be configured in the **Ride Mode** submenu.

7.13 time

The time is shown in area ❶ of the display.
The time can be displayed in 24-hour format or 12-hour format in all languages.
The format of the time can be configured in sub-menu **Clock Format**.

Note
The time must be reset if the 12 V battery was disconnected from the vehicle or the fuse was removed.

7.14 coolant temperature display

The coolant temperature is displayed by a symbol . The color of symbol changes depending on the temperature. Symbol disappears when the engine has reached operating temperature.

NOTE

Engine failure Overheating damages the engine.

- If the coolant temperature warning is displayed, stop immediately and take care not to endanger yourself or other traffic participants in the process.
- Allow the engine and cooling system to cool down.
- Check and, if necessary, correct the coolant level on the cooling system while it is in a cooled state.

Note

If the coolant temperature gauge lights up red, the display also starts to flash and a warning is displayed. If the cooling system overheats, the maximum engine speed is limited.

Condition		Meaning
	Coolant temperature gauge lights up blue.	The engine is cold.
	Coolant temperature gauge does not light up.	The engine is at operating temperature.
	Coolant temperature gauge lights up red.	Engine is hot.

7.15 ambient air temperature indicator

The ambient temperature is shown in area ❶ of the display.
The ambient air temperature is displayed in **°C** or **°F**.
The unit of the ambient air temperature can be configured in the **Temperature** submenu.

7.16 Favorites display

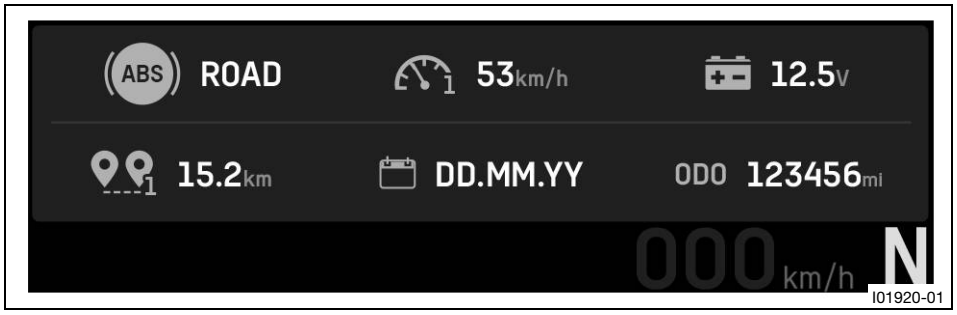

Up to six items of information are shown on the **Favorites** indicator.

Press the **UP** or **DOWN** button to display the **Favorites**.

The **Favorites** display can be freely configured in the **Favorites** submenu.

7.17 Navigation display (optional)

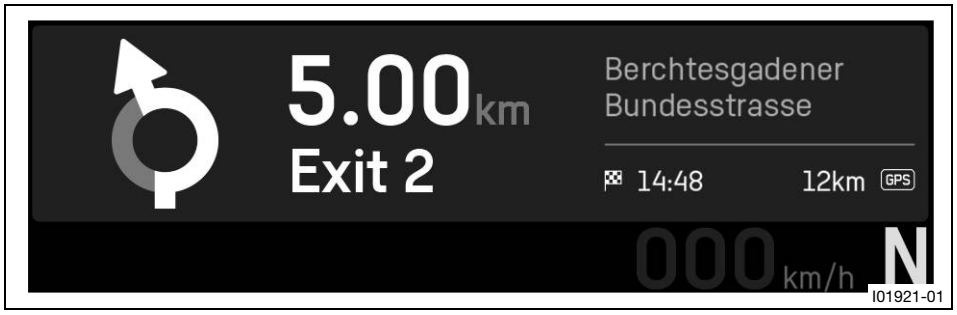

The **Navigation** indicator (optional) appears when the navigation function is activated.

In the **Navigation** display (optional), the direction arrow, the distance from the destination, the estimated arrival time of the cell phone, the distance to the next waypoint, and the street name are displayed.

The **Navigation** display (optional) can be switched on or off in menu **Navigation** (optional).

Conditions for use:

- The dashboard is connected to a suitable cell phone.
- The **Ride Husqvarna** app (optional) is installed and connected on a suitable cell phone (Android devices from version 7.0, iOS devices from version 14).

7.18 Call display

WARNING
Danger of accidents Headphone volume which is too high distracts attention from traffic activity.
– Always select headphone volume which is low enough for you to still clearly hear acoustic signals.

The **Call** indicator appears for incoming or active calls.
Press the **RIGHT** button to accept an incoming call.
Press the **LEFT** button to reject an incoming call.
Press the **UP** button to increase the audio volume.
Press the **DOWN** button to reduce the audio volume.

Note
It is not possible to change the audio volume using the combination switch with every cell phone.
The call duration and contact are displayed. Depending on the cell phone settings, the contact is shown by name.
You cannot navigate in the menu during an active phone conversation.

Condition for use:
- The dashboard is connected to a suitable cell phone.

7.19 Remote Control Mode (optional)

The **Remote Control Mode** indicator (optional) appears when **Remote Control Mode** is activated.
Pressing the **LEFT** button for approx. 3 seconds activates the **Remote Control Mode** (optional).
Pressing the **LEFT** button for approx. 3 seconds exits the **Remote Control Mode** (optional).
If **Remote Control Mode** (optional) is activated, you can navigate using the combination switch in the app on a cell phone.

Note
In **Remote Control Mode** (optional), you can only navigate within the app.
If **Remote Control Mode** (optional) is active, you cannot navigate in the combination instrument.
Remote Control Mode (optional) cannot be activated when a menu is open.

Conditions for use:
- The dashboard must be connected to a suitable cell phone.
- The **Ride Husqvarna** app (optional) must be installed, connected and opened on a suitable cell phone (Android devices from version 7.0, iOS devices from version 14).

7.20 Menu

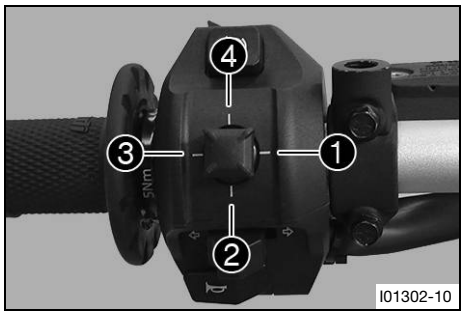

Note
Press the **RIGHT** button ❶ on the start screen to open the menu.
Navigate through the menu using the **UP** button ❹ or the **DOWN** button ❷.
By pressing the **LEFT** button ❸, the menu structure jumps one step back, or the menu is closed.

7.20.1 Cruise control system (optional)

– Press the **RIGHT** button when the menu is closed.
– Press the **UP** or **DOWN** button until cruise control is highlighted.
– Pressing the **RIGHT** button opens the menu.

Cruise control (optional) can be activated and deactivated in the cruise control menu (optional).
You can set the target speed in the cruise control menu (optional).

7.20.1.1 Target speed

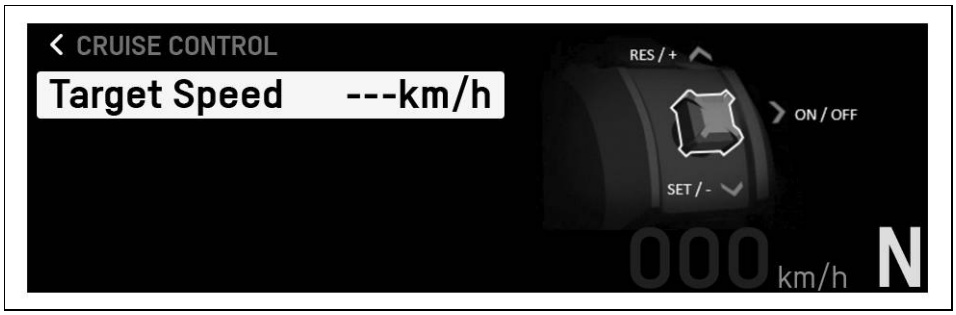

– Press the **RIGHT** button when the menu is closed.
– Press the **UP** or **DOWN** button until cruise control is highlighted.
– Pressing the **RIGHT** button opens the menu.

WARNING

Danger of accidents The cruise control system function is not suitable for all riding situations.

The selected cruise speed will not be reached if the engine power is not sufficient for a gradient.

The selected target speed will be exceeded if the engine braking effect is not sufficient on an incline.

– Do not use the cruise control systems function on winding roads.
– Do not use the cruise control systems on slippery road surfaces (e.g. rain, ice or snow), where there is poor visibility or on unpaved surfaces (e.g. sand, stones or gravel).
– Do not use the cruise control systems function if the traffic does not permit a constant speed.

– Press the **UP**, **DOWN** or **RIGHT** button to set cruise control.

Condition: Vehicle speed >30 km/h (19 mph)

- Briefly press the **UP** button to increase the target speed by 1 km/h (1 mph).
- Press and hold the **UP** button to increase the target speed by 5 km/h (5 mph).
- Press the **RIGHT** button to turn cruise control on or off.
- Briefly press the **DOWN** button to reduce the target speed by 1 km/h (1 mph).
- Press and hold the **DOWN** button to reduce the target speed by 5 km/h (5 mph).

The cruise control system function is deactivated when one of the following events occurs:

- The **RIGHT** button is pressed in the cruise control submenu.
- Operating the handbrake lever
- Operating the foot brake lever
- Operating the clutch lever
- Control of the motorcycle traction control (**MTC**)
- Slip on the rear wheel
- Lifting of the front wheel
- A malfunction occurring, which impairs the cruise control system function
- Exceeding the target speed for more than 30 seconds

Note

If the cruise control system function is switched on but cruise control is not activated, the cruise control system indicator lamp lights up yellow.

If the cruise control system function is switched on and cruise control is activated, the cruise control system indicator lamp lights up green.

After activating the cruise control function, the throttle grip can be turned back to the basic position. The selected speed will be maintained.

If the cruise speed is exceeded for less than 30 seconds by turning the throttle grip, the cruise control remains activated.

The menu can be exited while cruise control is active.

7.20.2 Motorcycle

– Press the **RIGHT** button when the menu is closed.
– Press the **UP** or **DOWN** button until **Motorcycle** is highlighted.
– Pressing the **RIGHT** button opens the menu.

In **Motorcycle**, motorcycle-relevant settings can be found, such as the ride mode, ABS mode, Spin Adjuster and MTC.

7.20.2.1 Ride Mode

– Press the **RIGHT** button when the menu is closed.
– Press the **UP** or **DOWN** button until **Motorcycle** is marked.
– Pressing the **RIGHT** button opens the menu.

WARNING
Danger of accidents An incorrectly selected ride mode makes it more difficult to control the vehicle.
The riding modes are each only suitable for certain conditions.
– Always select a riding mode that suits the surface on which you are riding, the weather and the riding situation.

– Press the **UP** or **DOWN** button until **Ride Mode** is highlighted.
– Press the **RIGHT** button to open the submenu.
– Activate the menu item using the **UP** or **DOWN** button.
– Press the **RIGHT** button to select the ride mode, which changes coordinated settings for the engine and motorcycle traction control.
  ✓ **Street** - Homologated performance with balanced response; the motorcycle traction control allows normal slip on the rear wheel.
  ✓ **Offroad** - Reduced homologated performance for better ridability; the motorcycle traction control allows less slip on the rear wheel.
  ✓ **Rally** (optional) - Throttle response and motorcycle traction control can be adjusted individually.

7.20.2.2 Adjusting Ride Mode

– Press the **RIGHT** button when the menu is closed.
– Press the **UP** or **DOWN** button until **Motorcycle** is marked.
– Pressing the **RIGHT** button opens the menu.

WARNING
Danger of accidents An incorrectly selected ride mode makes it more difficult to control the vehicle. The riding modes are each only suitable for certain conditions.
– Always select a riding mode that suits the surface on which you are riding, the weather and the riding situation.

– Press the **UP** or **DOWN** button until **Configure Ride Mode** is marked.
– Press the **RIGHT** button to open the submenu.

In **Configure Ride Mode**, features of the **Ride Mode** such as ABS or **Display Mode** can be adjusted.

7.20.2.3 Slip Adjuster (optional)

Condition: Ride mode **Rally** (optional) is activated

– Press the **RIGHT** button when the menu is closed.
– Press the **UP** or **DOWN** button until **Motorcycle** is marked.
– Pressing the **RIGHT** button opens the menu.
– Press the **UP** or **DOWN** button until **Configure Ride Mode** is marked.
– Press the **RIGHT** button to open the submenu.

WARNING
Danger of accidents An incorrectly selected ride mode makes it more difficult to control the vehicle. The riding modes are each only suitable for certain conditions.
– Always select a riding mode that suits the surface on which you are riding, the weather and the riding situation.

– Press the **UP** or **DOWN** button until **Slip Adjuster** is highlighted.
– Press the **RIGHT** button to open the submenu.
– Press the **RIGHT** button to set the maximum permitted slip for the motorcycle traction control.

Do not open the throttle during the selection.

The spin adjuster is a motorcycle traction control function.

The spin adjuster allows the motorcycle traction control to be tuned through nine levels to the desired characteristic map.

Level 0 allows maximum slip on the rear wheel, and level 9 allows the minimum.

The **UP** and **DOWN** buttons in the main display or in the **Slip Adjuster** menu can be used to adjust the **Slip Adjuster**.

Note

The slip adjustment is only available in **Rally** ride mode (optional).

The spin adjuster is only available when motorcycle traction control is activated.

– Press and hold the **DOWN** button or **RIGHT** button for approximately 2 seconds.	Spin adjuster level 0 is activated.

7.20.2.4 Dynamic Slip Adjuster (optional)

Condition: Ride mode **Rally** (optional) is activated

- Press the **RIGHT** button when the menu is closed.
- Press the **UP** or **DOWN** button until **Motorcycle** is marked.
- Pressing the **RIGHT** button opens the menu.
- Press the **UP** or **DOWN** button until **Configure Ride Mode** is marked.
- Press the **RIGHT** button to open the submenu.

WARNING

Danger of accidents An incorrectly selected ride mode makes it more difficult to control the vehicle. The riding modes are each only suitable for certain conditions.

- Always select a riding mode that suits the surface on which you are riding, the weather and the riding situation.

- Press the **UP** or **DOWN** button until **Dynamic Slip Adjuster** is highlighted.
- Press the **RIGHT** button to open the submenu.
- Activate the menu item using the **UP** or **DOWN** button.
- Switch **RIGHT** on or off by pressing the **Dynamic Slip Adjuster** button.

Do not open the throttle during the selection.

Dynamic Slip Adjuster is a Motorcycle Traction Control function.

If the difference between the torque required by the rider and the torque released by the motorcycle traction control reaches a certain value, the motorcycle traction control automatically allows more slip.

If the rider no longer demands much more torque than the setting of the motorcycle traction control, the torque is reset to the original setting of the motorcycle traction control.

Note
The slip adjustment is only available in **Rally** ride mode (optional).
Dynamic Slip Adjuster is only available when Motorcycle Traction Control is activated.
This function is particularly suitable for riding on loose ground, for example.

7.20.2.5 ABS

– Press the **RIGHT** button when the menu is closed.
– Press the **UP** or **DOWN** button until **Motorcycle** is marked.
– Pressing the **RIGHT** button opens the menu.
– Press the **UP** or **DOWN** button until **Configure Ride Mode** is marked.
– Press the **RIGHT** button to open the submenu.
– Press the **UP** or **DOWN** button until **ABS** is highlighted.
– Press the **RIGHT** button to open the submenu.
– Activate the menu item using the **UP** or **DOWN** button.

WARNING
Danger of accidents An incorrectly selected ABS mode makes it more difficult to control the vehicle.
The ABS modes are each only suitable for certain conditions.
– Always select an ABS mode that suits the ground and the riding situation.

– Press the **RIGHT** button to select the desired ABS mode.

Do not open the throttle during the selection.

Note
The ABS mode can be switched during the journey.
When the ABS mode **Road** is active, ABS controls both wheels.
When the **Offroad** ABS mode is active, ABS only controls the front wheel. The rear wheel is no longer controlled by ABS and may lock during braking maneuvers. The indicator lamp **ABS REAR** lights up.

7.20.2.6 MTC (optional)

– Press the **RIGHT** button when the menu is closed.
– Press the **UP** or **DOWN** button until **Motorcycle** is marked.
– Pressing the **RIGHT** button opens the menu.
– Press the **UP** or **DOWN** button until **Configure Ride Mode** is marked.
– Press the **RIGHT** button to open the submenu.

WARNING
Danger of accidents An incorrectly selected ride mode makes it more difficult to control the vehicle. The riding modes are each only suitable for certain conditions.
– Always select a riding mode that suits the surface on which you are riding, the weather and the riding situation.

– Press the **UP** or **DOWN** button until **MTC** is highlighted.
– Press the **RIGHT** button to open the submenu.
– Activate the menu item using the **UP** or **DOWN** button.
– Switch **RIGHT** on or off by pressing the **MTC** button.

Do not open the throttle when switching on or off.

Note
Press the **RIGHT** button briefly when activating the motorcycle traction control.
Hold down the **RIGHT** button when switching off the motorcycle traction control.

7.20.2.7 MTC+MSR (optional)

Condition: Model with **MTC+MSR**

– Press the **RIGHT** button when the menu is closed.
– Press the **UP** or **DOWN** button until **Motorcycle** is marked.
– Pressing the **RIGHT** button opens the menu.
– Press the **UP** or **DOWN** button until **MTC+MSR** is highlighted.
– Use the **RIGHT** or **LEFT** button to switch the **MTC+MSR** on or off.

Do not open the throttle when switching on or off.

Note

Press the **RIGHT** or **LEFT** button briefly when activating the motorcycle traction control and the motor slip regulation.

Hold down the **RIGHT** or **LEFT** button when switching off the motorcycle traction control and motor slip regulation.

When ABS mode **Offroad** is active, the **MSR** is not active.

7.20.2.8 Easy Shift (optional)

Condition: Model with Easy Shift (optional)

- Press the **RIGHT** button when the menu is closed.
- Press the **UP** or **DOWN** button until **Motorcycle** is marked.
- Pressing the **RIGHT** button opens the menu.
- Press the **UP** or **DOWN** button until **Configure Ride Mode** is marked.
- Press the **RIGHT** button to open the submenu.
- Press the **UP** or **DOWN** button until **Easy Shift** is marked.
- Press the **RIGHT** button to open the submenu.
- Activate the menu item using the **UP** or **DOWN** button.
- Switch Easy Shift on or off by pressing the **RIGHT** button.

7.20.2.9 Throttle Response (optional)

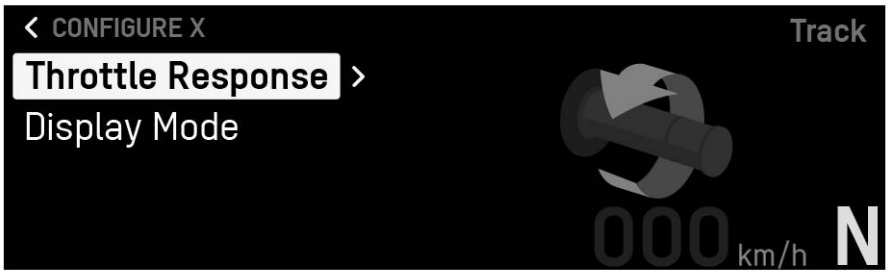

Condition: Ride mode **Rally** (optional) is activated

- Press the **RIGHT** button when the menu is closed.
- Press the **UP** or **DOWN** button until **Motorcycle** is marked.
- Pressing the **RIGHT** button opens the menu.
- Press the **UP** or **DOWN** button until **Configure Ride Mode** is marked.
- Press the **RIGHT** button to open the submenu.

WARNING
Danger of accidents An incorrectly selected ride mode makes it more difficult to control the vehicle. The riding modes are each only suitable for certain conditions.
– Always select a riding mode that suits the surface on which you are riding, the weather and the riding situation.

– Press the **UP** or **DOWN** button until **Throttle Response** is marked on the display.
– Press the **RIGHT** button to open the submenu.
– Activate the menu item using the **UP** or **DOWN** button.
– The characteristic map of the throttle response can be adjusted by pressing the **RIGHT** button.

Do not open the throttle when adjusting the throttle response.

✓ Street – balanced response.
✓ Offroad – gentle responsiveness.
✓ Rally – very direct responsiveness.

7.20.2.10 Display Mode

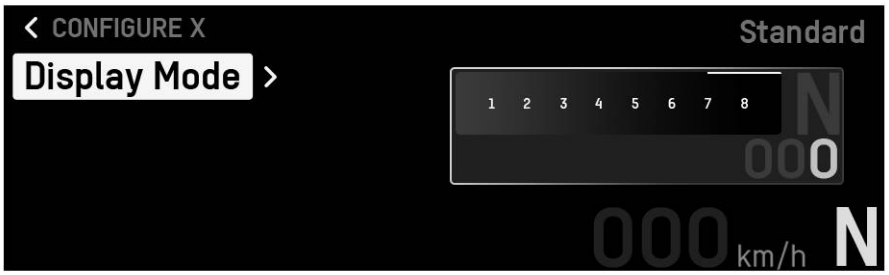

– Press the **RIGHT** button when the menu is closed.
– Press the **UP** or **DOWN** button until **Motorcycle** is marked.
– Pressing the **RIGHT** button opens the menu.
– Press the **UP** or **DOWN** button until **Configure Ride Mode** is marked.
– Press the **RIGHT** button to open the submenu.
– Press the **UP** or **DOWN** button until **Display Mode** is highlighted.
– Press the **RIGHT** button to open the submenu.
– Activate the menu item using the **UP** or **DOWN** button.
– You can switch between the normal and minimum speedometer view by pressing the **RIGHT** button.

7.20.3 Bike info

– Press the **RIGHT** button when the menu is closed.
– Press the **UP** or **DOWN** button until **Info** is highlighted.
– Pressing the **RIGHT** button opens the menu.

General information and warnings that may be present can be called up in **Bike Info**.

7.20.3.1 Trip 1

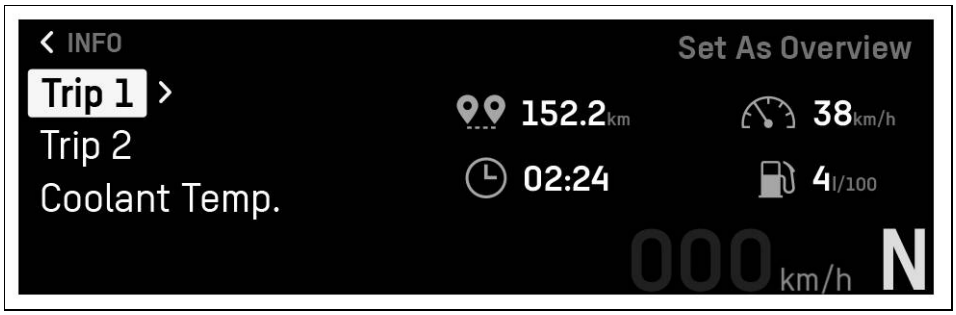

– Press the **RIGHT** button when the menu is closed.
– Press the **UP** or **DOWN** button until **Bike Info** is highlighted.
– Pressing the **RIGHT** button opens the menu.
– Press the **UP** or **DOWN** button until **Trip 1** is highlighted.
– Press the **RIGHT** button to open the submenu.

Information on **Trip 1** can be viewed in the **Trip 1** submenu.

Note

Trip displays the distance since the last reset, e.g. between two refueling stops. **Trip** runs along and counts to **9999**.

Trip Time shows the riding time on the basis of **Trip** and runs as soon as a speed signal is received.

ØConsump. indicates the average fuel consumption based on **Trip**.

ØSpeed indicates the average speed based on **Trip** and **Trip Time**.

Press **Reset Trip** to reset all entries in the **Trip 1** menu.

7.20.3.2 Trip 2

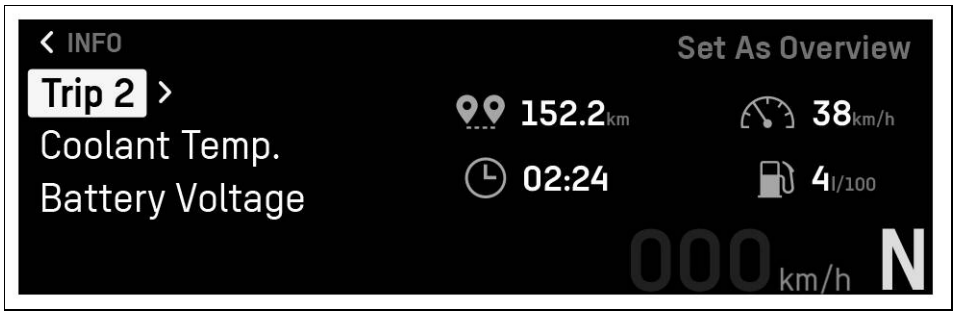

– Press the **RIGHT** button when the menu is closed.
– Press the **UP** or **DOWN** button until **Bike Info** is highlighted.
– Pressing the **RIGHT** button opens the menu.
– Press the **UP** or **DOWN** button until **Trip 2** is highlighted.
– Press the **RIGHT** button to open the submenu.

Information on **Trip 2** can be viewed in the **Trip 2** submenu.

Note

Trip displays the distance since the last reset, e.g. between two refueling stops. **Trip** runs along and counts to **9999**.

Trip Time shows the riding time on the basis of **Trip** and runs as soon as a speed signal is received.

ØConsump. indicates the average fuel consumption based on **Trip**.

ØSpeed indicates the average speed based on **Trip** and **Trip Time**.

Press **Reset Trip** to reset all entries in the **Trip 2** menu.

7.20.3.3 Low Fuel Trip Meter

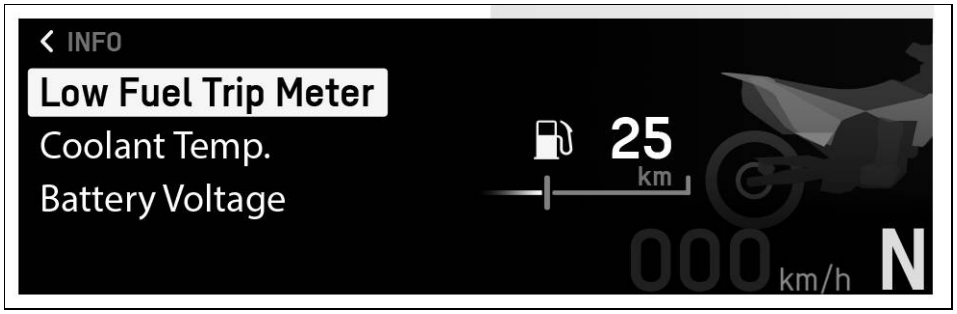

– Press the **RIGHT** button when the menu is closed.
– Press the **UP** or **DOWN** button until **Bike Info** is highlighted.
– Pressing the **RIGHT** button opens the menu.
– Press the **UP** or **DOWN** button until **Low Fuel Trip Meter** is highlighted.

When the fuel level reaches the reserve mark, a warning appears on the display and the fuel level warning light lights up.

Note

This indicator shows the distance traveled since the beginning of the fuel reserve.

When the indicator is closed, the fuel level warning lamp continues to be lit up.

The display is automatically reset after refueling.

7.20.3.4 info

– Press the **RIGHT** button when the menu is closed.
– Press the **UP** or **DOWN** button until **Bike Info** is highlighted.
– Pressing the **RIGHT** button opens the menu.
– Press the **UP** or **DOWN** button until **Info** is highlighted.

Water displays the coolant temperature.
Battery displays the battery voltage.
Odometer displays the total mileage.
Date & Time displays the time and the date.
Service displays when the next service is due.
Warnings displays warnings that have occurred until they are no longer active.

7.20.3.5 Warning

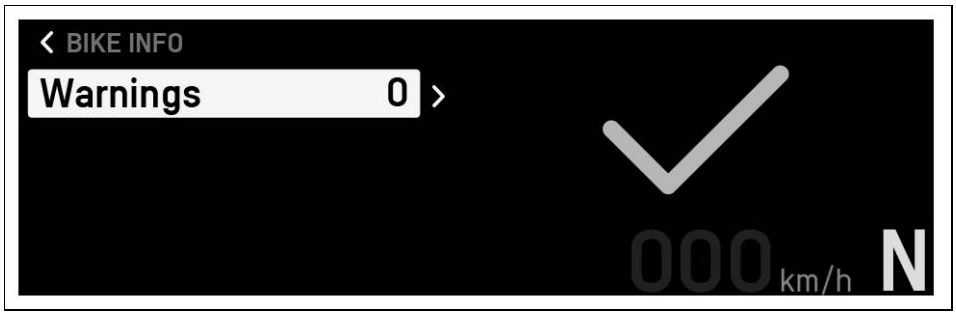

Condition: Message or warning is present

– Press the **RIGHT** button when the menu is closed.
– Press the **UP** or **DOWN** button until **Bike Info** is highlighted.
– Pressing the **RIGHT** button opens the menu.
– Press the **UP** or **DOWN** button until **Warning** is highlighted.
– Press the **RIGHT** button to open the submenu.
– Use the **UP** or **DOWN** button to navigate through the warnings.

Note
The warnings that have occurred are saved in the display until they are no longer active.

7.20.4 Stop navigation (optional)

Condition: Function **Bluetooth®** activated, The **Ride Husqvarna** app (optional) is installed and connected on a suitable cell phone (Android devices from version 7.0, iOS devices from version 14), The combination instrument is connected to a suitable cell phone, GPS function is activated on the connected cell phone, For voice navigation: The combination instrument is connected to a suitable communication system and an appropriate language package has been downloaded in the **Ride Husqvarna Navigation** app (optional).

– Press the **RIGHT** button when the menu is closed.
– Press the **UP** or **DOWN** button until navigation is marked.
– Pressing the **RIGHT** button opens the menu.

7.20.4.1 Volume (optional)

Condition: The **Ride Husqvarna** app (optional) is installed and connected on a suitable cell phone (Android devices from version 7.0, iOS devices from version 14), Dashboard is connected to a suitable cell phone, For voice navigation: the dashboard is connected to a suitable communication system and an appropriate language package has been downloaded in the **Ride Husqvarna** app (optional)

– Press the **RIGHT** button when the menu is closed.
– Press the **UP** or **DOWN** button until **Navigation** is marked.
– Pressing the **RIGHT** button opens the menu.

WARNING
Danger of accidents Headphone volume which is too high distracts attention from traffic activity.
– Always select headphone volume which is low enough for you to still clearly hear acoustic signals.

– Press the **UP** or **DOWN** button until **Volume** is marked.
– Press the **RIGHT** button to open the submenu.
– Press the **UP** button to increase the volume of the activated voice navigation.
– Press the **DOWN** button to reduce the volume of the activated voice navigation.

7.20.4.2 Last Destination (optional)

Condition: Function **Bluetooth®** activated, **Ride Husqvarna** app (optional) is installed and opened on a suitable cell phone (Android devices from version 7.0, iOS devices from version 13), The dashboard is connected to a suitable cell phone, GPS function is activated on the connected cell phone

- Press the **RIGHT** button when the menu is closed.
- Press the **UP** or **DOWN** button until **Navigation** is marked.
- Pressing the **RIGHT** button opens the menu.
- Press the **UP** or **DOWN** button until **Last Destination** is marked.
- Press the **RIGHT** button to open the submenu.
- Press the **UP** or **DOWN** button to select an address.
- Press the **RIGHT** button to confirm the selection and start navigation.

Note
The last 10 addresses searched for in the **Last Destination** app (optional) are saved in **Ride Husqvarna**.

7.20.4.3 Skip Waypoint (optional)

Condition: Function **Bluetooth®** activated, **Ride Husqvarna** app (optional) is installed and opened on a suitable cell phone, The dashboard is connected to a suitable cell phone, GPS function is activated on the connected cell phone, Navigation with at least one interim destination has been started in the **Ride Husqvarna** app (optional)

- Press the **RIGHT** button when the menu is closed.
- Press the **UP** or **DOWN** button until **Navigation** is marked.
- Pressing the **RIGHT** button opens the menu.
- Press the **UP** or **DOWN** button until **Skip Waypoint** is marked.
- Press the **RIGHT** button to select the waypoint.
- Press the **RIGHT** button again to confirm the selection and the waypoint is removed.

7.20.4.4 Favorites (optional)

Condition: Function **Bluetooth®** activated, **Ride Husqvarna** app (optional) is installed and opened on a suitable cell phone (Android devices from version 7.0, iOS devices from version 13), The dashboard is connected to a suitable cell phone, GPS function is activated on the connected cell phone, Favorites are saved in the **Ride Husqvarna** app (optional)

- Press the **RIGHT** button when the menu is closed.
- Press the **UP** or **DOWN** button until **Navigation** is marked.
- Pressing the **RIGHT** button opens the menu.
- Press the **UP** or **DOWN** button until **Favorites** is marked.
- Press the **RIGHT** button to open the submenu.
- Press the **UP** or **DOWN** button to select an address.
- Press the **RIGHT** button to confirm the selection and start navigation.

Note
10 addresses in the **Favorites** app (optional) can be stored in **Ride Husqvarna**.

7.20.4.5 Point of Interest (optional)

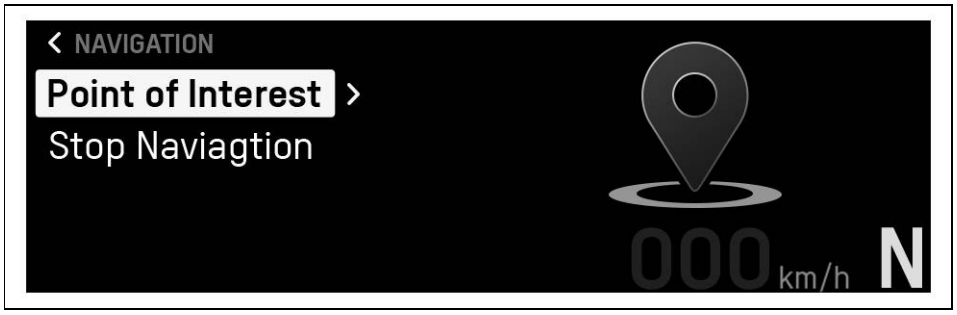

Condition: Function **Bluetooth®** activated, The **Ride Husqvarna** app (optional) is installed and opened on a suitable cell phone (Android devices from version 7.0, iOS devices from version 14), The dashboard is connected to a suitable cell phone

- Press the **RIGHT** button when the menu is closed.
- Press the **UP** or **DOWN** button until **Navigation** is marked.
- Pressing the **RIGHT** button opens the menu.
- Press the **UP** or **DOWN** button until **Point of Interest** is marked.
- Press the **RIGHT** button to confirm the selection.
- Press the **UP** or **DOWN** button to select an address.
- Press the **RIGHT** button to confirm the selection and start navigation.

Note
In **Point of Interest**, selected categories can be displayed in the **Ride Husqvarna** app (optional).

7.20.4.6 Stop Navigation (optional)

Condition: Function **Bluetooth®** activated, **Ride Husqvarna** app (optional) is installed and opened on a suitable cell phone (Android devices from version 7.0, iOS devices from version 13), The dashboard is connected to a suitable cell phone

- Press the **RIGHT** button when the menu is closed.
- Press the **UP** or **DOWN** button until **Navigation** is marked.
- Pressing the **RIGHT** button opens the menu.
- Press the **UP** or **DOWN** button until **Stop Navigation** is marked.
- Press the **RIGHT** button to confirm the selection and end navigation.

7.20.5 audio

Condition: Function **Bluetooth®** activated, The combination instrument is connected to a suitable cell phone, The combination instrument is connected to a suitable communication system or the **Headset Type Corded** is selected

- Press the **RIGHT** button when the menu is closed.

WARNING
Danger of accidents Headphone volume which is too high distracts attention from traffic activity.
- Always select headphone volume which is low enough for you to still clearly hear acoustic signals.

- Press the **UP** or **DOWN** button until **Audio** is highlighted.
- Press the **RIGHT** button to open the menu.
- Press and hold **UP** button to increase the audio volume.
- Press and hold **DOWN** button to reduce the audio volume.
- Press **UP** button briefly to change to the next audio track.
- Briefly pressing the **DOWN** button once or twice replays the current audio track from the start or changes to the previous audio track, depending on the cell phone.
- Press **RIGHT** button to play or pause the audio track.

Note
With some cell phones, the cell phone audio player needs to be started before playback is possible.

7.20.6 Heating (optional)

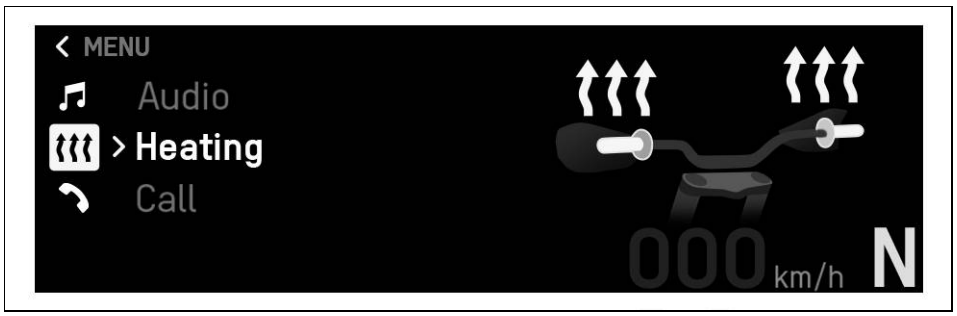

– Press the **RIGHT** button when the menu is closed.
– Press the **UP** or **DOWN** button until **Heating** is highlighted.
– Pressing the **RIGHT** button opens the menu.

Heated Grips (optional) can be activated and deactivated in menu **Heating** (optional).

7.20.6.1 Heated Grips (optional)

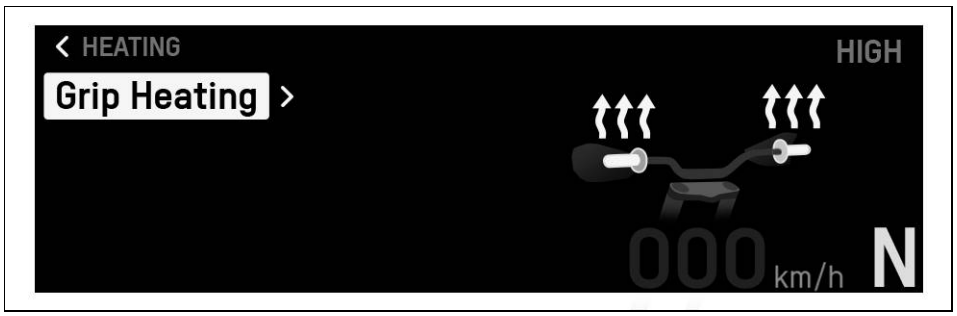

Condition: Model with grip heater, Motorcycle is stationary

– Press the **RIGHT** button when the menu is closed.
– Press the **UP** or **DOWN** button until **Heating** is highlighted.
– Press the **RIGHT** button to open the menu.
– Press the **UP** or **DOWN** button until **Heated Grips** is marked.
– Press the **RIGHT** button to open the submenu.
– Activate the menu item using the **UP** or **DOWN** button.
– Press the **RIGHT** button to switch the heated grip on or off.

7.20.7 call

Condition: Function **Bluetooth®** activated, Function **Bluetooth®** also activated on the device that is to be paired, The combination instrument is connected to a suitable cell phone, Dashboard is connected to a suitable audio device

– Press the **RIGHT** button when the menu is closed.

WARNING
Danger of accidents Headphone volume which is too high distracts attention from traffic activity.
– Always select headphone volume which is low enough for you to still clearly hear acoustic signals.

– Press the **UP** or **DOWN** button until **Call** is highlighted.
– Pressing the **RIGHT** button opens the menu.

Press the **RIGHT** button to accept an incoming call.
Press the **LEFT** button to reject an incoming call.
Press and hold **UP** button to increase the audio volume.
Press and hold **DOWN** button to reduce the audio volume.
The last calls and favorites can be called up in the **Call** menu.

7.20.7.1 Last Calls

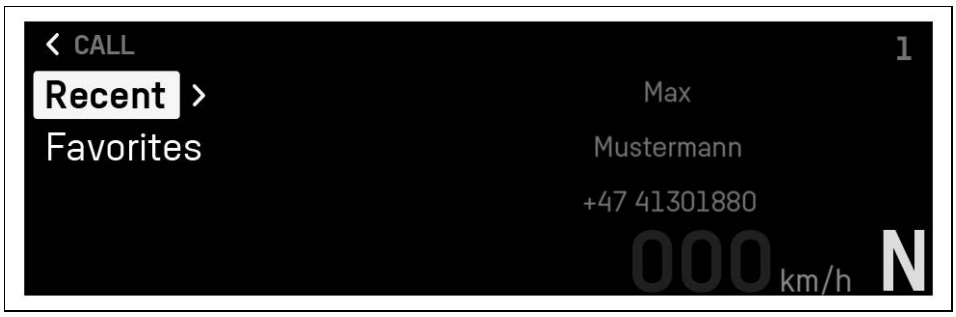

WARNING
Danger of accidents Headphone volume which is too high distracts attention from traffic activity.
– Always select headphone volume which is low enough for you to still clearly hear acoustic signals.

– Press the **RIGHT** button when the menu is closed.
– Press the **UP** or **DOWN** button until **Call** is highlighted.

Note
It is not possible to change the audio volume using the combination switch with every cell phone.
The call duration and contact are displayed. Depending on the cell phone settings, the contact is shown by name.
If necessary, accessing contacts must be enabled on the cell phone.
You cannot navigate in the menu during an active phone conversation.

– Pressing the **RIGHT** button opens the menu.

– Press the **UP** or **DOWN** button until **Last Calls** is highlighted.
– Press the **RIGHT** button to open the submenu.
– Press the **UP** or **DOWN** button until the desired person is marked.
– This person can be called by pressing the **RIGHT** button.

7.20.7.2 favorites

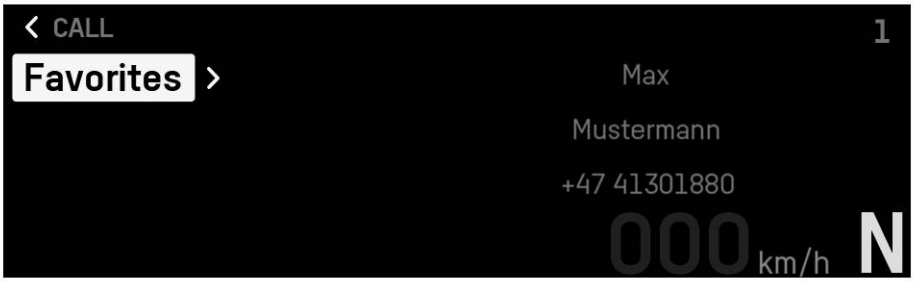

WARNING
Danger of accidents Headphone volume which is too high distracts attention from traffic activity.
– Always select headphone volume which is low enough for you to still clearly hear acoustic signals.

– Press the **RIGHT** button when the menu is closed.
– Press the **UP** or **DOWN** button until **Call** is highlighted.

Note
It is not possible to change the audio volume using the combination switch with every cell phone.
The call duration and contact are displayed. Depending on the cell phone settings, the contact is shown by name.
If necessary, accessing contacts must be enabled on the cell phone.
You cannot navigate in the menu during an active phone conversation.

– Pressing the **RIGHT** button opens the menu.
– Press the **UP** or **DOWN** button until **Favorites** is highlighted.
– Press the **RIGHT** button to open the submenu.
– Press the **UP** or **DOWN** button until the desired person is marked.
– This person can be called by pressing the **RIGHT** button.

7.20.8 Settings

– Press the **RIGHT** button when the menu is closed.
– Press the **UP** or **DOWN** button until **Settings** is highlighted.
– Pressing the **RIGHT** button opens the menu.

In menu **Settings**, favorites **Connectivity** and the shift light can be configured. Settings can be made for units or various values. Several functions can be enabled or disabled.

7.20.8.1 favorites

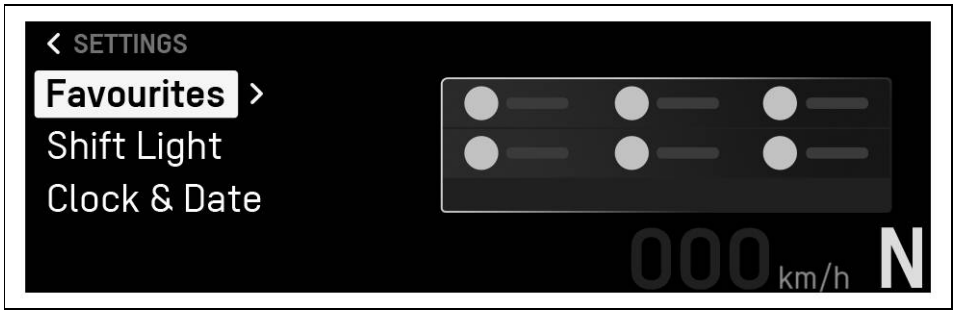

Condition: Motorcycle is stationary

– Press the **RIGHT** button when the menu is closed.
– Press the **UP** or **DOWN** button until **Settings** is highlighted.
– Press the **RIGHT** button to open the menu.
– Press the **UP** or **DOWN** button until “Favorites” is highlighted.
– Press the **RIGHT** button to open the submenu.
– Access menu item with the **UP** or **DOWN** button, and add the selected information to the Favorites display using the **RIGHT** button.

Up to six sets of information can be selected in submenu **Favorites**.

7.20.8.2 Rally Favorites (optional)

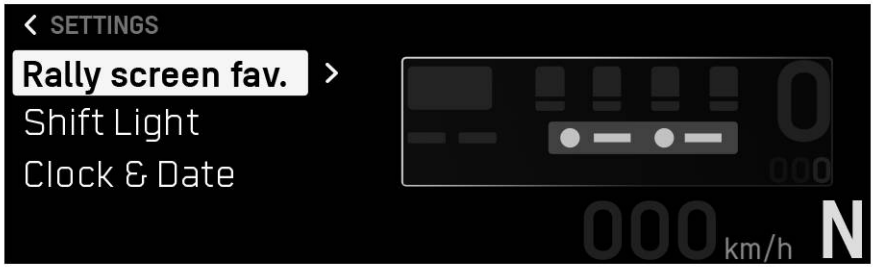

Condition: Motorcycle is stationary, Ride mode **Rally** (optional) is activated

- Press the **RIGHT** button when the menu is closed.
- Press the **UP** or **DOWN** button until **Settings** is highlighted.
- Press the **RIGHT** button to open the menu.
- Press the **UP** or **DOWN** button until “Favorites” is highlighted.
- Press the **RIGHT** button to open the submenu.
- Access menu item with the **UP** or **DOWN** button, and add the selected information to the Favorites display using the **RIGHT** button.

Up to two sets of information can be selected in submenu **Rally Favorites** (optional).

7.20.8.3 connectivity

Condition: Motorcycle is stationary, Function **Bluetooth®** activated

- Press the **RIGHT** button when the menu is closed.
- Press the **UP** or **DOWN** button until **Settings** is highlighted.
- Press the **RIGHT** button to open the menu.
- Press the **UP** or **DOWN** button until **Connectivity** is highlighted.
- Press the **RIGHT** button to open the submenu.

In submenu **Connectivity**, a suitable cell phone or suitable communication system can be connected via **Bluetooth®** to the dashboard, allowing the audio and navigation functions to be configured.

Note
Not every cell phone and communication system is suitable for pairing with the dashboard.
The standard **Bluetooth®** 4.0 must be supported.

7.20.8.4 Bluetooth

- Press the **RIGHT** button when the menu is closed.
- Press the **UP** or **DOWN** button until **Settings** is highlighted.
- Press the **RIGHT** button to open the menu.
- Press the **UP** or **DOWN** button until **Connectivity** is highlighted.
- Press the **RIGHT** button to open the submenu.
- Press the **UP** or **DOWN** button until **Bluetooth** is highlighted.
- Press the **RIGHT** button to open the submenu.
- Activate the menu item using the **UP** or **DOWN** button.
- Press the **RIGHT** button to switch the **Bluetooth®** function on or off.

Note
The function **Bluetooth®** must be activated to pair a suitable cell phone or communication system with the vehicle.
Not every cell phone and communication system is suitable for pairing with the dashboard.

7.20.8.5 pairing a phone

- Press the **RIGHT** button when the menu is closed.
- Press the **UP** or **DOWN** button until **Settings** is highlighted.
- Press the **RIGHT** button to open the menu.
- Press the **UP** or **DOWN** button until **Connectivity** is highlighted.
- Press the **RIGHT** button to open the submenu.
- Press the **UP** or **DOWN** button until “Pair phone” is highlighted.

  Note
  Only one cell phone can be paired with the vehicle at a time.

- Press the **RIGHT** button to open the submenu.
- Press the **UP** or **DOWN** button until **New Pairing** is marked.
- Press the **RIGHT** button to open the submenu.
- The vehicle starts the search for a suitable cell phone. If the search is successful, the name of the cell phone is displayed again in the pairing menu. Press the **RIGHT** button to start the pairing.

Note
The cell phone must be visible via **Bluetooth®** in order for the cell phone to be found by the vehicle.
Not every cell phone is suitable for pairing with the vehicle.

– A message appears on the combination instrument indicating that the vehicle is now ready for pairing. The pairing is successfully completed by confirming the **Passkey** on the cell phone and on the dashboard.

Note
Follow the instructions in the app when connecting with **Ride Husqvarna**. Confirmation may be required on the combination instrument.

– Press the **UP** or **DOWN** button until “Delete pairing” is highlighted. The paired device can be deleted by pressing the **RIGHT** button.
– Move the previously paired device into the range of the vehicle while the **Bluetooth®** function is active.
  ✓ The device is automatically connected with the vehicle.
  ✗ If the device is not automatically connected with the vehicle after approx. 30 seconds:
    – Switch on the vehicle again or repeat the **New Pairing** procedure.

In submenu **Phone Pairing**, a suitable cell phone can be paired with the dashboard via **Bluetooth®**.

Note
Not every cell phone and communication system is suitable for pairing with the dashboard.
Make sure the end device is in the correct pairing mode for call management. If the end device is only paired for media playback, the call function may not work.

7.20.8.6 headset pairing

– Press the **RIGHT** button when the menu is closed.
– Press the **UP** or **DOWN** button until **Settings** is highlighted.
– Press the **RIGHT** button to open the menu.
– Press the **UP** or **DOWN** button until **Connectivity** is highlighted.
– Press the **RIGHT** button to open the submenu.
– Press the **UP** or **DOWN** button until **Headset Pairing** is marked.
– Press the **RIGHT** button to open the submenu.
– Press the **UP** or **DOWN** button until **New Pairing** is highlighted.
– Press the **RIGHT** button to open the submenu.
– The vehicle starts searching for a suitable communication system. If the search was successful, the name of the rider's audio device is displayed in the **New Pairing** submenu. Press the **RIGHT** button to start the pairing.

Note
The communication system must be in pairing mode for the communication system to be found by the vehicle. Follow the instructions in the communication system owner's manual.
Press the **UP** or **DOWN** button until **Delete Pairing** is highlighted. The paired device can be deleted by pressing the **RIGHT** button.
Not every communication system is suitable for pairing with the vehicle.

– Move the previously paired device into the range of the vehicle while the **Bluetooth®** function is active.

✓ The device is automatically connected with the vehicle.
✗ If the device is not automatically connected with the vehicle after approx. 30 seconds:
  – Switch on the vehicle again or repeat the **New Pairing** procedure.

In the **Riders Headset** submenu, a suitable rider communication system can be paired with the vehicle.

7.20.8.7 Type of audio device

– Press the **RIGHT** button when the menu is closed.
– Press the **UP** or **DOWN** button until **Settings** is highlighted.
– Press the **RIGHT** button to open the menu.
– Press the **UP** or **DOWN** button until **Connectivity** is highlighted.
– Press the **RIGHT** button to open the submenu.
– Press the **UP** or **DOWN** button until **Headset Type** is highlighted.
– Activate the menu item using the **UP** or **DOWN** button.
– Press the **RIGHT** button to change the rider audio device type.

The connection type of the rider's audio device can be selected in the **Headset Type** submenu.

The communication system is connected to the vehicle wirelessly via **Bluetooth Headset** in **Bluetooth®** display mode.

The communication system is connected directly to the smartphone in display mode **Corded Headset**.

Note
The **Riders Headset** menu item is only available in **Headset Type Bluetooth**.

7.20.8.8 Shift Light

Condition: Motorcycle is stationary, **ODO** > 1,000 km (621 miles)

– Press the **RIGHT** button when the menu is closed.
– Press the **UP** or **DOWN** button until **Settings** is highlighted.
– Press the **RIGHT** button to open the menu.
– Press the **UP** or **DOWN** button until **Shift Light** is highlighted.
– Press the **RIGHT** button to open the submenu.

The shift warning light can be configured in the **Shift Light** submenu.

7.20.8.9 Shift Light Activation

Condition: Motorcycle is stationary, **ODO** > 1000 km (621 mi)

- Press the **RIGHT** button when the menu is closed.
- Press the **UP** or **DOWN** button until **Settings** is highlighted.
- Press the **RIGHT** button to open the menu.
- Press the **UP** or **DOWN** button until **Shift Light** is highlighted.
- Press the **RIGHT** button to open the submenu.
- Press the **UP** or **DOWN** button until **Activation** is highlighted.
- Activate the menu item using the **UP** or **DOWN** button.
- Press the **RIGHT** button to switch the shift warning light on or off.

7.20.8.10 RPM1

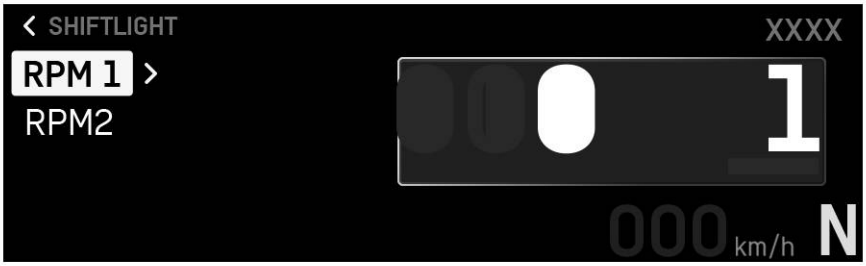

Condition: Motorcycle is stationary, **ODO** > 1000 km (621 mi)

- Press the **RIGHT** button when the menu is closed.
- Press the **UP** or **DOWN** button until **Settings** is highlighted.
- Press the **RIGHT** button to open the menu.
- Press the **UP** or **DOWN** button until **Shift Light** is highlighted.
- Press the **RIGHT** button to open the submenu.
- Press the **UP** or **DOWN** button until **RPM1** is highlighted.
- Press the **RIGHT** button to open the submenu.
- Activate the menu item using the **UP** or **DOWN** button.
- Set the value for **RIGHT** by pressing the **RPM1** button.

RPM1 must not be larger than **RPM2**.

Note

RPM1 can be set in intervals of 500 between 5500 and 10,000 rpm.

If the engine speed reaches the set value **RPM1**, the engine speed display flashes as a shift warning light.

7.20.8.11 RPM2

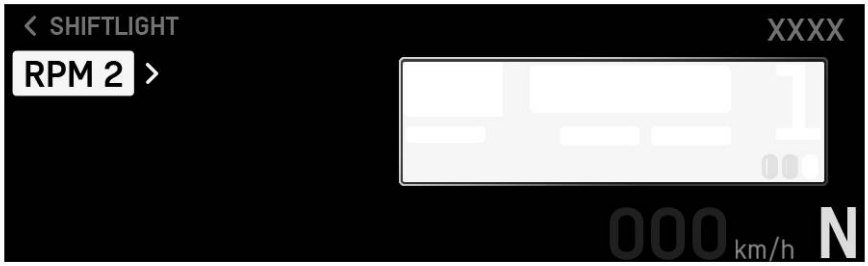

Condition: Motorcycle is stationary, **ODO** > 1000 km (621 mi)

- Press the **RIGHT** button when the menu is closed.
- Press the **UP** or **DOWN** button until **Settings** is highlighted.
- Press the **RIGHT** button to open the menu.
- Press the **UP** or **DOWN** button until **Shift Light** is highlighted.
- Press the **RIGHT** button to open the submenu.
- Press the **UP** or **DOWN** button until **RPM2** is highlighted.
- Press the **RIGHT** button to open the submenu.
- Activate the menu item using the **UP** or **DOWN** button.
- Set the value for **RIGHT** by pressing the **RPM2** button.

RPM2 must not be smaller than **RPM1**.

Note
RPM2 can be set in intervals of 500 between 7000 and 10,000 rpm.
If the engine speed reaches the set value **RPM2**, the screen flashes as a shift warning light.

7.20.8.12 Setting the time and date

Condition: Motorcycle is stationary

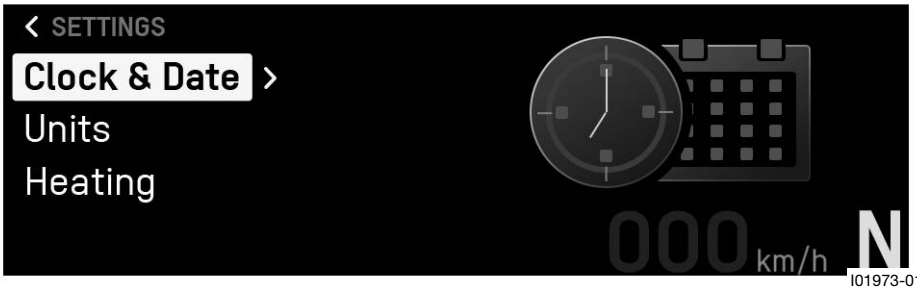

- Press the **RIGHT** button when the menu is closed.
- Press **UP** or **DOWN** button until **Settings** appears.
- Pressing the **RIGHT** button opens the menu.
- Press the **UP** or **DOWN** button until **Clock & Date** is highlighted.
- Press the **RIGHT** button to open the submenu.

Setting the clock

– Press the **UP** or **DOWN** button until **Set Clock** is marked.
– Press the **RIGHT** button to open the submenu.
– Press the **UP** or **DOWN** button until the hour is set.
– Press the **RIGHT** button to select the hour.
– Press the **UP** or **DOWN** button until the minute is set.
– Press the **RIGHT** button to select the minute.
– Press the **LEFT** button to exit the menu.

Setting the date

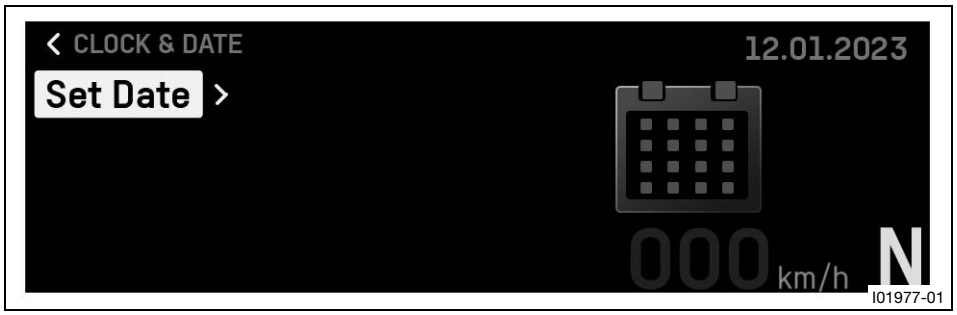

– Press the **UP** or **DOWN** button until **Set Date** is marked.
– Press the **RIGHT** button to open the submenu.
– Press the **UP** or **DOWN** button until the day is set.
– Press the **RIGHT** button to select the day.
– Press the **UP** or **DOWN** button until the month is set.
– Press the **RIGHT** button to select the month.
– Press the **UP** or **DOWN** button until the year is set.
– Press the **RIGHT** button to select the year.
– Press the **LEFT** button to exit the menu.

7.20.8.13 Clock format

Condition: Motorcycle is stationary

- Press the **RIGHT** button when the menu is closed.
- Press the **UP** or **DOWN** button until **Settings** is highlighted.
- Pressing the **RIGHT** button opens the menu.
- Press the **UP** or **DOWN** button until **Clock Format** is highlighted.
- Press the **RIGHT** button to open the submenu.
- Activate the menu item using the **UP** or **DOWN** button.
- Press the **RIGHT** button to select the time format.

Note
The possible settings are 24h and 12h.

7.20.8.14 Date format

Condition: Motorcycle is stationary

- Press the **RIGHT** button when the menu is closed.
- Press the **UP** or **DOWN** button until **Settings** is highlighted.
- Pressing the **RIGHT** button opens the menu.
- Press the **UP** or **DOWN** button until **Date Format** is highlighted.
- Press the **RIGHT** button to open the submenu.
- Activate the menu item using the **UP** or **DOWN** button.
- Press the **RIGHT** button to select the date format.

Note
The possible settings are DD.MM.YYYY, MM.DD.YYYY and YYYY.MM.DD.

7.20.8.15 Units

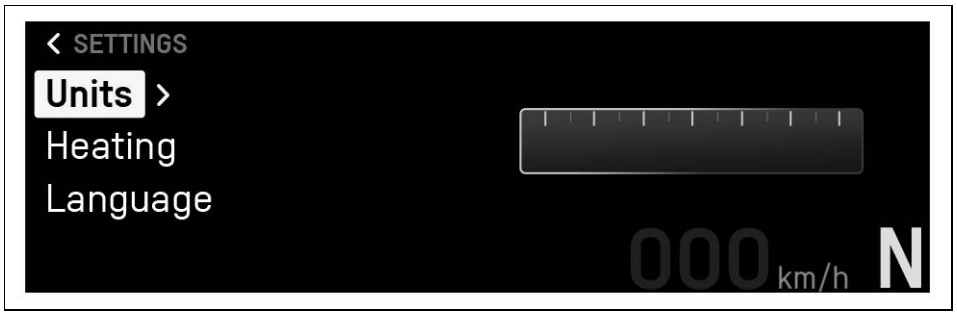

Condition: Motorcycle is stationary

- Press the **RIGHT** button when the menu is closed.
- Press the **UP** or **DOWN** button until **Settings** is highlighted.
- Press the **RIGHT** button to open the menu.
- Press the **UP** or **DOWN** button until **Units** is highlighted.
- Press the **RIGHT** button to open the submenu.

The **Units** submenu allows settings to be made for units or various values.

7.20.8.16 Distance

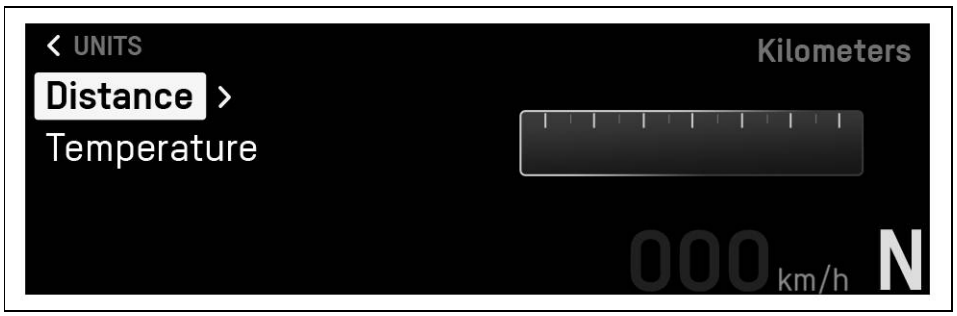

Condition: Motorcycle is stationary

- Press the **RIGHT** button when the menu is closed.
- Press the **UP** or **DOWN** button until **Settings** is highlighted.
- Press the **RIGHT** button to open the menu.
- Press the **UP** or **DOWN** button until **Units** is highlighted.
- Press the **RIGHT** button to open the submenu.
- Press the **UP** or **DOWN** button until **Distance** is marked.
- Press the **RIGHT** button to open the submenu.
- Activate the menu item using the **UP** or **DOWN** button.
- Press the **RIGHT** button to confirm the desired unit.

Note
Kilometers and miles can be set.

7.20.8.17 Temperature

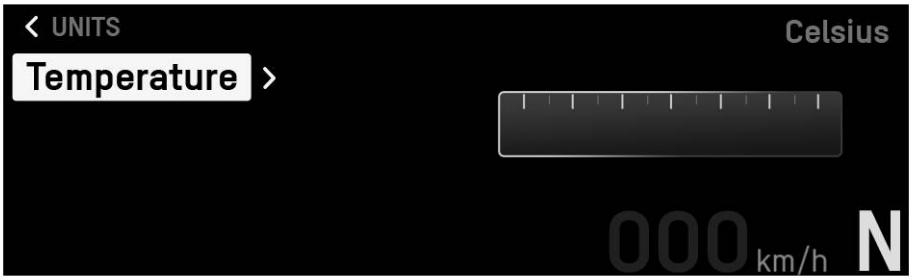

Condition: Motorcycle is stationary

- Press the **RIGHT** button when the menu is closed.
- Press the **UP** or **DOWN** button until **Settings** is highlighted.
- Press the **RIGHT** button to open the menu.
- Press the **UP** or **DOWN** button until **Units** is highlighted.
- Press the **RIGHT** button to open the submenu.
- Press the **UP** or **DOWN** button until **Temperature** is marked.
- Press the **RIGHT** button to open the submenu.
- Activate the menu item using the **UP** or **DOWN** button.
- Press the **RIGHT** button to confirm the desired unit.

Note
Celsius and Fahrenheit can be set.

7.20.8.18 Language

Condition: Motorcycle is stationary

- Press the **RIGHT** button when the menu is closed.
- Press the **UP** or **DOWN** button until **Settings** is highlighted.
- Press the **RIGHT** button to open the menu.
- Press the **UP** or **DOWN** button until **Language** is highlighted.
- Press the **RIGHT** button to open the submenu.
- Activate the menu item using the **UP** or **DOWN** button.
- Press the **RIGHT** button to confirm the desired language.

Note
The menu languages are US English, UK English, German, Italian, French, and Spanish.

7.20.8.19 Heating (optional)

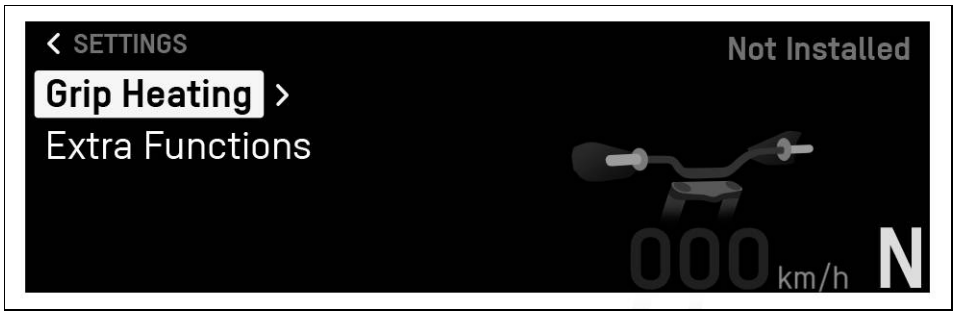

Condition: Motorcycle is stationary

- Press the **RIGHT** button when the menu is closed.
- Press the **UP** or **DOWN** button until **Settings** is highlighted.
- Press the **RIGHT** button to open the menu.
- Press the **UP** or **DOWN** button until **Heating** is highlighted.
- Press the **RIGHT** button to open the submenu.

The heated grip can be configured in the **Heating** submenu.

Note
In the **Settings** menu, the **Heating** submenu only controls the visibility of **Heated Grips** in the menu.

7.20.8.20 Extra Functions

Condition: Motorcycle is stationary, Motorcycle with optional supplementary function

- Press the **RIGHT** button when the menu is closed.
- Press the **UP** or **DOWN** button until **Settings** is highlighted.
- Press the **RIGHT** button to open the menu.
- Press the **UP** or **DOWN** button until **Extra Functions** is highlighted.
- Press the **RIGHT** button to open the submenu.
- Use the **UP** or **DOWN** button to navigate through the extra functions.

Note
The optional extra functions are listed.
The current accessories and available software are listed on the **Husqvarna Mobility** website.

8.1 Notes on preparing for first use

DANGER
Danger of accidents A rider who is not fit to ride poses a danger to themself and to others.
– Do not operate the vehicle if you are not fit to ride due to alcohol, drugs, or medication.
– Do not operate the vehicle if you are physically or mentally incapable of doing so.

WARNING
Danger of accidents The brake system fails in the event of overheating.
If the brake pedal is not released, the brake pads grind continuously.
– Take your foot off the brake pedal when you are not braking.

WARNING
Danger of accidents Non-approved or non-recommended tyres and wheels impact the handling characteristic.
– Only use tires and wheels approved and recommended by the vehicle manufacturer with the corresponding speed rating.

WARNING
Danger of accidents New tires have reduced road grip.
The contact surface on new tires is not yet roughened.
– Run in new tires with moderate riding and only gradually increase the lean angle.

Run-in distance	200 km (124.3 mi)

WARNING
Danger of accidents Different tire profiles on the front and rear wheels can make it more difficult to control the vehicle.
– Make sure that only tires of the same tread type are mounted to the front and rear wheel.

WARNING
Risk of injury Missing or inadequate protective clothing increases the risk of injury.
– Wear appropriate protective clothing such as helmet, boots, gloves as well as pants and a jacket with protectors on all rides.
– Always wear protective clothing that is in good condition and meets the legal regulations.

Note
When using the motorcycle, remember that others may be disturbed by excessive noise.

– Ensure that the pre-delivery inspection has been carried out by an authorized contractual partner.
  ✓ The delivery certificate is transferred upon vehicle handover.
– Read the entire owner's manual before riding for the first time.
– Get to know the controls.
– Adjust the basic position of the clutch lever. (p. 105)
– Adjust the basic position of the hand brake lever. (p. 108)
– Adjust the basic position of the brake pedal. (p. 114)
– Adjust the basic position of the gear shift lever. (p. 148)
– Get used to the handling characteristics of the motorcycle on suitable terrain before undertaking a more challenging ride. Also, ride as slowly as possible and in a standing position to get a better feel for the motorcycle.
– Do not make any trips that exceed your ability and experience.

– Hold the handlebar with both hands and keep your feet on the footpegs when riding.
– Run in the engine. (p. 71)

8.2 Running in the engine

– During the running-in time, do not exceed the specified vehicle speed in the respective gear.

During the first	1,000 km (621.4 mi)

Maximum speed per gear	
1st gear	45 km/h (28.0 mph)
2nd gear	65 km/h (40.4 mph)
3rd gear	85 km/h (52.8 mph)
4th gear	105 km/h (65.2 mph)
5th gear	120 km/h (74.6 mph)
6th gear	130 km/h (80.8 mph)

Avoid fully opening the throttle.

8.3 Loading the vehicle

WARNING
Fire hazard The hot exhaust system may burn luggage.
– Fasten your luggage in such a way that it cannot be burned or singed by the hot exhaust system.

WARNING
Danger of accidents A high payload alters the handling characteristic and increases the stopping distance.
– Adapt your speed to your payload.

WARNING
Danger of accidents Carrying luggage alters handling characteristics.
– Adapt your speed to your payload.
– Ride more slowly if your vehicle is loaded with cases or other luggage.

Maximum speed with luggage	130 km/h (80.8 mph)

WARNING
Danger of accidents Items of luggage that have slipped or are incorrectly fastened can obscure the lighting system.
– Check that your luggage is fixed properly at regular intervals.
– Make sure that the lighting system is not covered by luggage.

WARNING
Danger of accidents Total weight and axle loads influence the handling characteristic.
The total weight consists of: operational vehicle with a full tank, rider and, if applicable, a passenger with protective clothing and helmet, and, if applicable, mounted luggage.
– Do not exceed the maximum permissible total weight or the axle loads.

WARNING
Danger of accidents Improper mounting of cases, tank rucksacks or other luggage impairs the handling characteristics.
Luggage mounted incorrectly can slip while the vehicle is in motion.
– Mount and secure all luggage according to the manufacturer's instructions.
– Check that your luggage is fixed properly at regular intervals.

WARNING
Danger of accidents The luggage system will be damaged if it is overloaded.
– Read the manufacturer information on maximum payload when mounting cases.

– If luggage is carried, ensure it is fixed firmly as close as possible to the center of the vehicle and ensure even weight distribution between the front and rear wheels.

The maximum permissible total weight and the maximum permissible axle loads must not be exceeded.	
Maximum permissible total weight	350 kg (771.6 lb)
Maximum permissible front axle load	150 kg (330.7 lb)
Maximum permissible rear axle load	200 kg (440.9 lb)

8.4 Preparing the vehicle for difficult operating conditions

Note
Use of the vehicle under difficult conditions, such as on sand, dust or on wet and muddy roads/terrain, can result in significantly increased wear of components, such as the powertrain, brake system, or suspension components. For this reason, it may be necessary to inspect or replace parts before the next scheduled service interval.

Note
In dusty conditions, it may be necessary to check and replace the air filter more frequently, possibly even daily.

– Check the connector for humidity and corrosion and to ensure it is firmly seated.
  » If moisture, corrosion, or damage is found:
    – Clean and dry the socket connector, or change it if necessary.

Difficult operating conditions are:
– Sand
– Dust
– Wet or muddy roads
– Temperatures above +40 °C
– Temperatures below -10 °C

9.1 Checks and maintenance measures when preparing for use

Note
Before every trip, check the condition of the vehicle and ensure that it is roadworthy.
The vehicle must be in perfect technical condition when it is being operated.

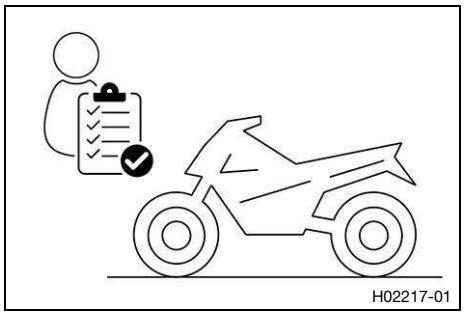

- Check the engine oil level. (p. 149)
- Check the brake fluid level for the front brake. (p. 109)
- Check the brake fluid level for the rear brake. (p. 115)
- Check that the brake pads of the front brake are secured. (p. 111)
- Check that the brake pads of the rear brake are secured. (p. 116)
- Check that the brake system is functioning properly.
- Check the coolant level. (p. 140)
- Check the chain for dirt. (p. 99)
- Check the chain tension. (p. 100)
- Check the tire condition. (p. 124)
- Check the tire pressure. (p. 126)
- Check the settings of all controls and ensure that they can be operated smoothly.
- Check that the electrical equipment is functioning properly.
- Check that luggage is properly secured.
- Sit on the motorcycle and check the rear mirror setting.
- Check the fuel level.
- In dusty operating conditions: Check the air filter box and air filter.

9.2 Starting the vehicle

DANGER
Danger of poisoning Exhaust gases are toxic and inhaling them may result in unconsciousness and death.
- Always ensure that there is sufficient ventilation when running the engine.
- Use suitable exhaust extraction when starting or running the engine in an enclosed space.

WARNING
Danger of accidents Electronic components and safety devices will be damaged if the 12-V battery is discharged or missing.
If the 12-V battery is discharged or defective, malfunctions in the vehicle electronics can occur, especially when starting.
- Never operate the vehicle with a discharged 12-V battery or without a 12-V battery.

NOTE
Engine failure Running a cold engine at high engine speeds negatively impacts the service life of the engine.
- Always warm up the engine at low engine speeds.

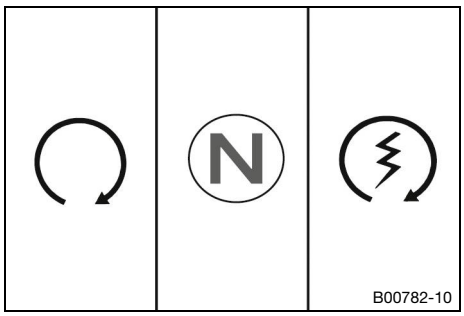

– Press the kill switch into position ◯.
– Switch on the ignition by turning the ignition key to position ◯.

To avoid malfunctions in the control unit communication, do not switch the ignition off and on in rapid succession.

✓ After you switch on the ignition, you can hear the fuel pump operating for about two seconds. The function check of the combination instrument is run at the same time.
✓ The **ABS** warning light lights up and goes back out after starting off.
– Shift the transmission into the neutral position.
✓ Green neutral indicator **N** lights up.
– Press electric starter ⚡.

Do not press the start button until the combination instrument function check has finished.
Do not open the throttle to start.
If the starting attempt is unsuccessful, wait for 15 seconds before making another attempt at starting.
After 6 unsuccessful starting attempts, do not try again, and check the vehicle for other malfunctions instead.

Note
This motorcycle is equipped with a safety starting system. You can only start the engine if the transmission is in neutral or if the clutch lever is pulled when a gear is engaged. If the side stand is folded out and you shift into gear and release the clutch lever, the engine stops.

– Take the weight off the side stand and swing it back up with your foot as far as it will go.

Switching off the ABS

Husqvarna Mobility recommends riding with ABS at all times. However, situations may arise in which ABS is not advantageous.

Condition: Motorcycle is stationary, Vehicle speed before stopping: ≥ 5 km/h (≥ 3.1 mph), ABS mode **Offroad** is activated.

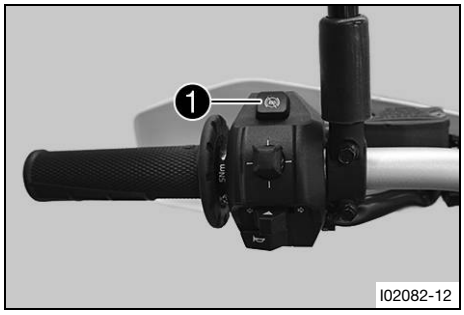

– Press and hold the button ❶ for 3 – 5 seconds.
✓ The **ABS** warning lamp lights up; the ABS is deactivated.

Note
If the ABS is switched off completely, the vehicle's approval for road use is invalidated.
The vehicle may only be operated in closed-off areas away from public road traffic.

9.3 Starting off

– Pull the clutch lever, shift into first gear, release the clutch lever slowly and at the same time carefully open the throttle.

9.4 Shifting, riding.

WARNING
Risk of injury The passenger may fall from the vehicle if they act incorrectly.
– Ensure that the passenger sits correctly on the passenger seat, places his or her feet on the passenger foot pegs and holds on to the rider or the grab handles.

WARNING
Danger of accidents Not adapting the riding style constitutes a major risk.
– Comply with traffic regulations and ride defensively and with foresight to detect sources of danger as early as possible.

WARNING
Danger of accidents Total weight and axle loads influence the handling characteristic.
The total weight consists of: operational vehicle with a full tank, rider and, if applicable, a passenger with protective clothing and helmet, and, if applicable, mounted luggage.
– Do not exceed the maximum permissible total weight or the axle loads.

WARNING
Danger of accidents Improper mounting of cases, tank rucksacks or other luggage impairs the handling characteristics.
Luggage mounted incorrectly can slip while the vehicle is in motion.
– Mount and secure all luggage according to the manufacturer's instructions.
– Check that your luggage is fixed properly at regular intervals.

WARNING
Danger of accidents Adjustments to the vehicle distract attention from traffic activity.
– Make all adjustments when the vehicle is at a standstill.

WARNING
Danger of accidents Abrupt load alterations can cause the vehicle to become out of control.
– Avoid abrupt load alterations and sudden braking actions unless a hazardous situation arises.

WARNING
Danger of accidents Cold tires have reduced road grip.
– Ride the first miles carefully on every journey at moderate speed until the tires reach operating temperature.

WARNING
Danger of accidents New tires have reduced road grip.
The contact surface on new tires is not yet roughened.
– Run in new tires with moderate riding and only gradually increase the lean angle.

Run-in distance	200 km (124.3 mi)

WARNING
Danger of accidents A fall can damage the vehicle more seriously than it may first appear.
– Check the vehicle after a fall as you do when preparing for use.

WARNING
Danger of accidents An incorrect ignition key position causes malfunctions.
– Do not change the ignition key position while riding.

WARNING
Danger of accidents If you downshift at high engine speed, the rear wheel blocks and the engine races.
– Do not downshift to a lower gear at high engine speeds.

NOTE
Transmission damage Incorrect use of Easy Shift will damage the transmission.
Easy Shift can only be used if the function is activated in the combination instrument.
Easy Shift is not active if you pull the clutch lever.
– Only use Easy Shift in the permitted speed range shown.

NOTE
Engine failure Overheating damages the engine.
– If the coolant temperature warning is displayed, stop immediately and take care not to endanger yourself or other traffic participants in the process.
– Allow the engine and cooling system to cool down.
– Check and, if necessary, correct the coolant level on the cooling system while it is in a cooled state.

NOTE
Engine failure Unfiltered intake air has a negative effect on the service life of the engine.
Dust and dirt can enter the engine if there is no air filter or if the air filter is mounted incorrectly.
– Only operate the vehicle if an air filter is correctly fitted.

Note
If you hear unusual noises while riding, stop immediately, switch off the engine, park the vehicle safely, and contact an authorized contractual partner.

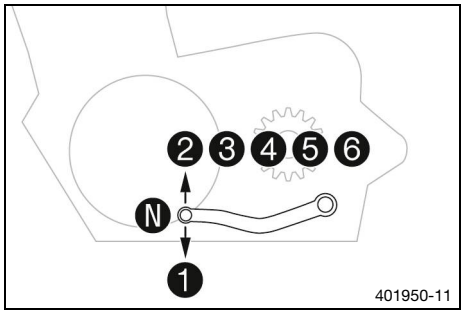

– Shift into a higher gear when conditions allow (incline, riding situation, etc.).
– Release the throttle while simultaneously pulling the clutch lever, shift into the next gear, release the clutch lever, and open the throttle.

Note
The gear positions can be seen in the figure. The neutral or idle position is between the first and second gears. First gear is used for starting off or for steep inclines.

– After reaching maximum speed by fully opening the throttle twist grip, turn the throttle back so that it is ¾ open. This will reduce the speed slightly, but the fuel consumption will be considerably lower.
– Accelerate only up to a speed suitable for the road surface and weather conditions. In particular, you should not change gear on bends and should only accelerate very cautiously.
– Brake if necessary and close the throttle at the same time in order to shift down.

- Pull clutch lever and shift into a lower gear, release the clutch lever slowly, and open the throttle or shift again.
- If the engine stalls (e.g. at an intersection), just pull the clutch lever and press the start button. The transmission must not be shifted into neutral.
- Switch off the engine if you are likely to be running at idle speed or stationary for a long time.
- Avoid frequent and lengthy slipping of the clutch. This causes the engine oil, engine and cooling system to heat up.
- Ride at a low engine speed instead of at a high engine speed when riding the clutch.
- If the malfunction indicator light lights up during a trip, please contact an authorized contractual partner as soon as possible.
- **Easy Shift** allows you to shift up in the speed range shown without pulling the clutch lever.

Minimum speed before gear change	
First gear to second gear	30 km/h (18.6 mph)
Second gear to third gear	40 km/h (24.9 mph)
Third gear to fourth gear	45 km/h (28.0 mph)
Fourth gear to fifth gear	50 km/h (31.1 mph)
Fifth gear to sixth gear	55 km/h (34.2 mph)

- Easy Shift allows you to shift down in the speed range shown without pulling the clutch lever.

Maximum speed before gear change	
Sixth gear to fifth gear	165 km/h (102.5 mph)
Fifth gear to fourth gear	145 km/h (90.1 mph)
Fourth gear to third gear	120 km/h (74.6 mph)
Third gear to second gear	90 km/h (55.9 mph)
Second gear to first gear	60 km/h (37.3 mph)

9.5 Easy Shift

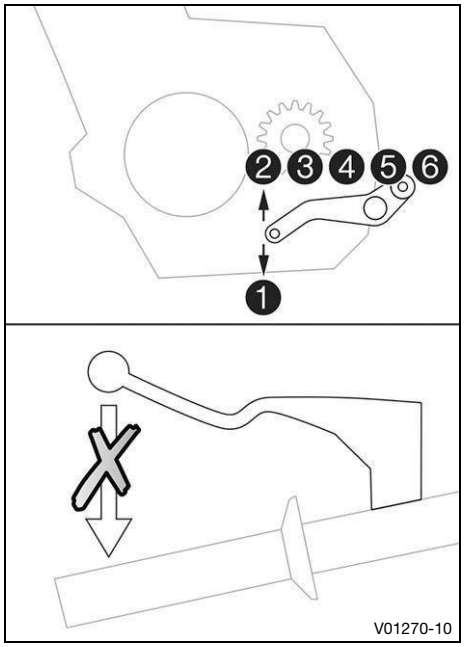

If **Easy Shift** is activated, you can shift up and down without operating the clutch.

Because there is no need to close the throttle grip, uninterrupted gear shifts are possible.

Easy Shift uses the shifter shaft position to check whether shifting should be initiated, and sends a corresponding signal to the engine control unit.

9.6 Motorcycle traction control

The motorcycle traction control (**cornering MTC**) lowers the engine torque in case of loss of traction in the rear wheel. Depending on the riding mode, different amounts of slip are allowed when the traction control is activated.

Note

When motorcycle traction control is switched off, the rear wheel may spin during strong acceleration and on surfaces with low grip, resulting in a risk of crashing.

Motorcycle traction control **MTC** is switched on and off on the dashboard.

Note

When the motorcycle traction control is active, the TC indicator lamp flashes.

When motorcycle traction control is switched off, the TC indicator light lights up.

9.7 Braking

WARNING
Danger of accidents A spongy pressure point on the front or rear brake reduces the brake action.
– Do not drive the vehicle if the brake system has a spongy pressure point.

WARNING
Danger of accidents The brake system fails in the event of overheating.
If the brake pedal is not released, the brake pads grind continuously.
– Take your foot off the brake pedal when you are not braking.

WARNING
Danger of accidents Braking with excessive force locks the wheels.
The ABS effectiveness is only ensured if it is switched on.
– Leave the ABS switched on in order to benefit from the protective effect.

WARNING
Danger of accidents Moisture and dirt impair the brake system.
– Brake carefully several times to dry out and remove dirt from the brake pads and the brake discs.

WARNING
Danger of accidents The rear wheel can lock due to the engine braking effect.
– Pull the clutch when performing emergency braking or braking on slippery surfaces.

WARNING
Danger of accidents Salt on the roads impairs the brake system.
– Brake carefully several times to remove salt from the brake linings and the brake discs.

WARNING
Danger of accidents ABS may increase the stopping distance in certain situations.
– Adapt your braking to the riding situation and the road conditions.

WARNING
Danger of accidents Higher total weight increases the stopping distance.
– Take the longer stopping distance into account when carrying a passenger or luggage with you.

– To brake release the throttle and apply the front and rear brakes at the same time.

Note
When the **ABS** is enabled, maximum braking power can be applied even on surfaces with low road grip such as sandy, wet, or slippery terrain without the danger of the wheels locking.

WARNING
Danger of accidents Banked or laterally sloping ground reduces the maximum possible delay.
– If possible finish braking before going into a bend.

– Always finish braking before you go into a bend. Shift into a lower gear that suits the speed.
– Use the brake action of the engine on long downhill stretches. To do so, shift back one or two gears, but do not overrev the engine. This means that significantly less braking is required and means the brake system does not overheat.

9.8 Stop, park

WARNING
Risk of injury People who act without authorization endanger themselves and others.
– Never leave the vehicle unattended while the engine is running.
– Lock the steering and remove the ignition key if you leave the vehicle unattended.

WARNING
Danger of burns Some vehicle components become hot when the vehicle is operated.
– Do not touch any parts such as the exhaust system, radiator, engine, damper, or brake system before the vehicle parts have cooled down.
– Allow the vehicle parts to cool down before performing any work on the vehicle.

NOTE
Fire hazard Hot vehicle components pose a fire hazard and explosion risk.
– Do not park the vehicle near materials which are highly flammable or explosive.
– Allow the vehicle to cool down before covering it.

NOTE
Material damage The vehicle may be damaged if parked incorrectly.
Damage can occur if the vehicle rolls away or falls over.
The components for parking the vehicle are designed only for the weight of the vehicle.
– Park the vehicle on a firm and level surface.
– Make sure that nobody sits on the vehicle when it is parked on a stand.

– Brake the motorcycle.
– Shift the transmission into the neutral position.
– Switch off the ignition by turning the ignition key to position ⊗.

Note
If the engine is switched off with the kill switch and the ignition remains switched on at the ignition lock, power continues to flow to most electrical loads. This discharges the 12-V battery. You should therefore always switch off the engine with the ignition lock – the kill switch is intended for emergencies only.

– Park the motorcycle on a firm surface.
– Swing side stand forward with your foot as far as it will go and lean the vehicle on it.
– Lock the steering by turning the handlebar fully to the left, pressing down the ignition key to position ⊗ and turning it to position 🔒. To make the steering lock engage more easily, move the handlebar a little to the left and right. Remove the ignition key.

9.9 Transport

NOTE
Fire hazard Hot vehicle components pose a fire hazard and explosion risk.
– Do not park the vehicle near materials which are highly flammable or explosive.
– Allow the vehicle to cool down before covering it.

NOTE
Material damage The vehicle may be damaged if parked incorrectly.
Damage can occur if the vehicle rolls away or falls over.
The components for parking the vehicle are designed only for the weight of the vehicle.

– Park the vehicle on a firm and level surface.
– Make sure that nobody sits on the vehicle when it is parked on a stand.

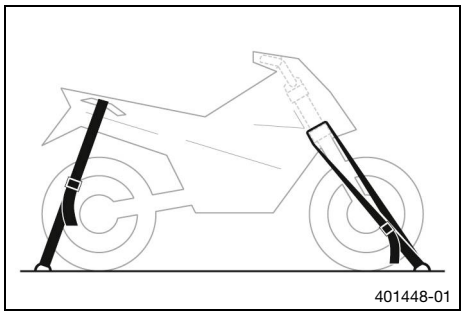

– Switch off the engine and remove the ignition key.
– Use tension belts or other suitable devices to secure the motorcycle against falling over or rolling away.

9.10 Towing in the event of a breakdown

NOTE
Danger of damage Damage to the powertrain and transmission can occur when towing with a towing vehicle.
– Do not use towing equipment where the wheels of the broken down vehicle remain on the road and rotate as it is towed.
– Always transport a broken down vehicle on a trailer or on the loading area of a transport vehicle.

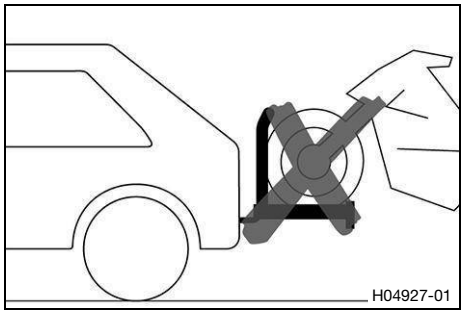

– Ensure that the broken down vehicle is properly secured on the trailer or transport vehicle.
– Observe local regulations for the recovery of broken down vehicles.

9.11 Refueling

DANGER
Fire hazard Fuel is highly flammable.
The fuel in the fuel tank expands when warm and can escape if overfilled.
– Do not refuel the vehicle in the vicinity of open flames, glowing, or smoldering objects.
– Make sure that nobody smokes in the vicinity of the vehicle during the refueling process.
– Switch off the engine for refueling.
– Make sure that no fuel is spilled; particularly not on hot parts of the vehicle.
– If any fuel is spilled, wipe it up immediately.
– Do not overfill the fuel tank.

WARNING
Danger of poisoning Fuel is harmful to health.
– Do not allow fuel to come into contact with skin, eyes, or clothing.
– Consult a doctor immediately if fuel has been ingested.
– Do not inhale fuel vapors.
– Rinse the affected area immediately with plenty of water in the event of contact with skin.

- Rinse eyes thoroughly with water and consult a doctor immediately if fuel comes into contact with eyes.
- If fuel spills on to your clothing, change the clothing.
- Store fuel properly in a suitable container and keep out of the reach of children.

NOTE

Material damage Inadequate fuel quality can lead to losses in performance and consequential damage.

- Refuel only with clean fuel that meets the specified standards.

NOTE

Environmental hazard Improper handling of fuel is dangerous to the environment.

- Do not allow fuel to enter the groundwater, the soil, or the sewage system.

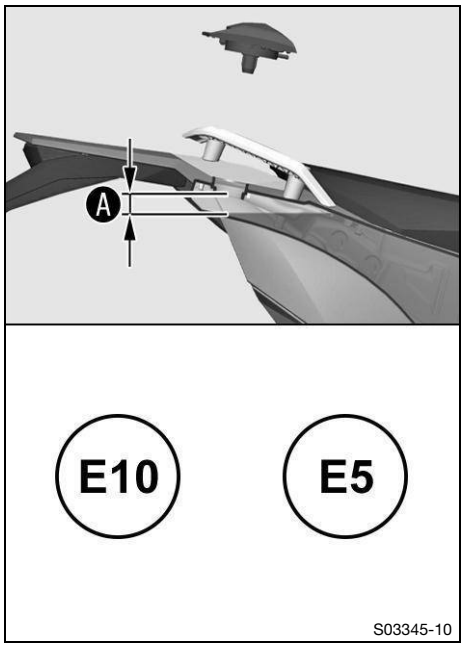

- Switch off the engine.
- Open the fuel tank cap. (p. 28)
- Fill the fuel tank with fuel no higher than A.

Level A	20 mm (0.79 in)

Fuel tank capacity, approx.	
Super unleaded (ROZ 95) (p. 178)	13.2 l (3.49 liq. gal_{US})

- Close the fuel tank cap. (p. 29)

10.1 Service schedule

Any further work that results from the service work must be ordered separately and invoiced separately.
Different service intervals may apply in your country, depending on the local operating conditions.
Individual service intervals and scopes may change in the course of technical developments. The most up-to-date service schedule is available for authorized contractual partners for the electronic proof of service. Your authorized contractual partner will be happy to advise you.
* In dusty operating conditions: Check the air filter regularly and replace if necessary.

						Every 48 months
					Every 24 months	
				Every 12 months		
			every 30,000 km (18,641.1 mi)			
		every 15,000 km (9,320.6 mi)				
	after 1,000 km (621.4 mi)					
Read out the fault memory using the diagnostics tool.	○	●	●	●	●	●
Program the shift shaft sensor.	○	●	●	●	●	●
Check that the electrical equipment is functioning properly.	○	●	●	●	●	●
Check that the brake pads of the front brake are secured. (p. 111)	○	●	●	●	●	●
Check that the brake pads of the rear brake are secured. (p. 116)	○	●	●	●	●	●
Check the brake discs. (p. 109)	○	●	●	●	●	●
Check the brake lines for damage and tightness.	○	●	●	●	●	●
Check the brake fluid level for the front brake. (p. 109)	○	●	●	●		
Change the brake fluid for the front brake.					●	●
Check the brake fluid level for the rear brake. (p. 115)	○	●	●	●		
Change the brake fluid for the rear brake.					●	●
Check/correct the fluid level of the hydraulic clutch. (p. 105)		●	●	●		
Change the hydraulic clutch fluid.					●	●
Check the free travel of the brake pedal. (p. 113)	○	●	●	●	●	●
Change the engine oil and the oil filter, clean the oil screens. (p. 149)	○	●	●	●	●	●
Check all hoses (e.g. fuel, cooling, bleeder, drainage, etc.) and boots for cracking, leaks, and correct routing.		●	●	●	●	●
Empty the drainage hoses.	○	●	●	●	●	●
Check the cables for damage and that there are no kinks in the routing.		●	●	●	●	●
Check the frame.			●			
Check the swingarm.			●			
Check the swingarm bearing for play.		●	●			
Check the steering head bearing play.	○	●	●			
Check the wheel bearing for play.	○	●	●	●	●	●
Check the shock absorber and fork for leaks. Perform a fork service and shock absorber service as needed and depending on how the vehicle is used.	○	●	●	●	●	●
Check the tire condition. (p. 124)	○	●	●	●	●	●
Check the tire pressure. (p. 126)	○	●	●	●	●	●
Check the rim run-out.	○	●	●	●	●	●

	after 1,000 km (621.4 mi)	every 15,000 km (9,320.6 mi)	every 30,000 km (18,641.1 mi)	Every 12 months	Every 24 months	Every 48 months
Retighten the spokes.	○					
Check the spoke tension. (p. 126)		●	●	●	●	●
Check the chain, rear sprocket, engine sprocket, and chain guide. (p. 101)		●	●	●	●	●
Check the chain tension. (p. 100)	○	●	●	●	●	●
Grease all moving parts (e.g. side stand, hand lever, chain, etc.) and check for smooth operation.	○	●	●	●	●	●
Change the spark plugs.			●			
Check the valve clearance.			●			
Change the air filter, clean the air filter box. *		●	●			
Change the fuel screen.	○					
Change the fuel screen, and check the fuel pressure.		●	●	●	●	●
Check the headlight setting. (p. 136)	○	●	●			
Check the tightness of the safety-relevant screws and nuts which are easily accessible.	○	●	●	●	●	●
Clean the dust boots of the fork legs. (p. 91)		●	●			
Check that the radiator fan is functioning properly.	○	●	●	●	●	●
Check the frost protection and coolant level. (p. 139)	○	●	●	●	●	
Change the coolant. (p. 143)						●
Final check: Check the vehicle is roadworthy and take a test ride.	○	●	●	●	●	●
Read out the fault memory after the test ride using the diagnostics tool.	○	●	●	●	●	●
Set the service interval display.	○	●	●	●	●	●
Enter the electronic proof of service in the contractual partner portal.	○	●	●	●	●	●

○ One-time interval

● Periodic interval

11.1 Fork/shock absorber

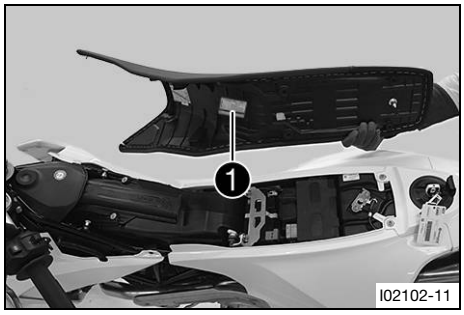

The fork and the shock absorber offer many options for adapting the chassis to the riding style and the payload.

Note
The recommendations for the suspension setting are shown in table ❶. The table is located on the underside of the seat.

These adjustments should be understood as guide values and should always be the basis for one's personal suspension setting. Do not change the adjustments at random, as otherwise the riding characteristics could deteriorate, particularly at high speeds.

11.2 Triple clamp offset

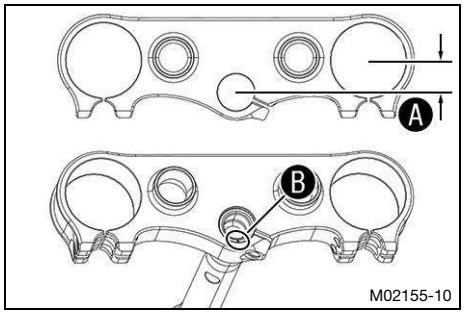

On this vehicle, the handling characteristics can be influenced by the fork offset.

The fork offset is the distance Ⓐ between the center of the fork legs and the steering head bearing.

The set fork offset can be detected at marking Ⓑ when the steering head screw is removed.

Note
The larger fork offset improves handling when cornering. The smaller fork offset improves riding stability.
To adjust the fork offset, the triple clamps need to be disassembled and the steering stem removed from the lower triple clamp.
The fork offset cannot be continuously adjusted.

11.3 Adjusting the compression damping of the fork

Note
The hydraulic compression damping determines the fork suspension behavior.

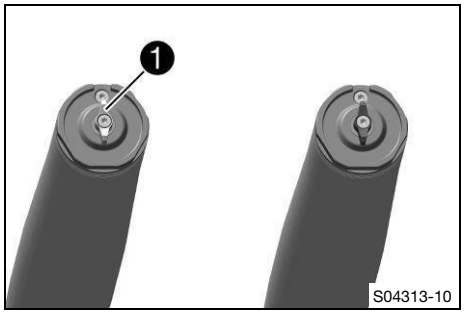

– Turn white adjuster ❶ clockwise as far as it will go.

Note
Adjuster ❶ **COMP** is located at the upper end of the left fork leg.
Adjusters **REB** are located at the top end of the fork legs.

– Turn counterclockwise by the number of clicks corresponding to the fork type.

Compression damping	
Standard	15 clicks

Note
Turning clockwise increases damping; turning counterclockwise reduces damping during compression.

11.4 Adjusting the rebound damping of the fork

Note
The hydraulic rebound damping determines the fork suspension behavior.

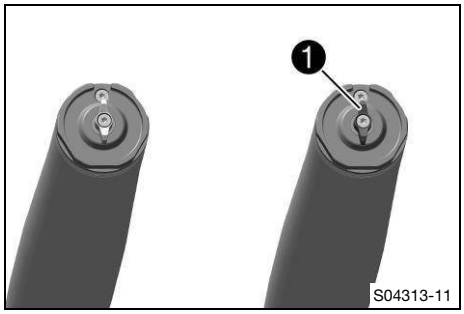

– Turn red adjuster ❶ clockwise as far as it will go.

Note
Adjusters ❶ **REB** are located at the upper end of the right fork leg.
Adjuster **COMP** is located at the upper end of the left fork leg.

– Turn counterclockwise by the number of clicks corresponding to the fork type.

Rebound damping	
Standard	15 clicks

Note
Turning clockwise increases damping; turning anticlockwise reduces damping on rebound.

11.5 Compression damping of the shock absorber

The compression damping of the shock absorber is divided into two ranges: high-speed and low-speed.

High-speed and low-speed refer to the compression speed of the rear wheel suspension and not to the vehicle speed.

The high-speed compression adjuster, for example, has an effect when riding over an asphalt edge: the rear wheel suspension compresses quickly.

The low-speed compression has an effect, for example, when riding over long bumps: the rear wheel suspension compresses slowly.

These two ranges can be adjusted separately, although the transition between high-speed and low-speed is floating. As a result, changes in the high-speed range affect the compression damping in the low-speed range and vice versa.

11.6 Adjusting the low-speed compression damping of the shock absorber

CAUTION
Risk of injury Parts of the shock absorber will move erratically if the shock absorber is detached incorrectly.
The shock absorber is filled with highly compressed nitrogen.
– Please follow the description provided.

Note
The effect of the low-speed compression adjustment can be seen in slow to normal compression of the shock absorber.

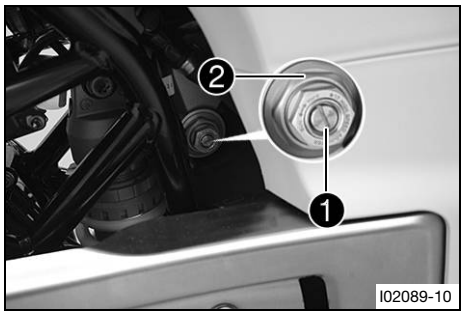

– Turn adjuster ❶ clockwise with a screwdriver as far as the last perceptible click.

Do not loosen fitting ❷!

– Turn counterclockwise by the number of clicks corresponding to the shock absorber type.

Low-speed compression damping	
Standard	15 clicks

Note
Turning clockwise increases damping; turning anti-clockwise reduces damping.

11.7 Adjusting the high-speed compression damping of the shock absorber

CAUTION
Risk of injury Parts of the shock absorber will move erratically if the shock absorber is detached incorrectly.
The shock absorber is filled with highly compressed nitrogen.
– Please follow the description provided.

Note
The effect of the high-speed compression adjustment can be seen in the fast compression of the shock absorber.

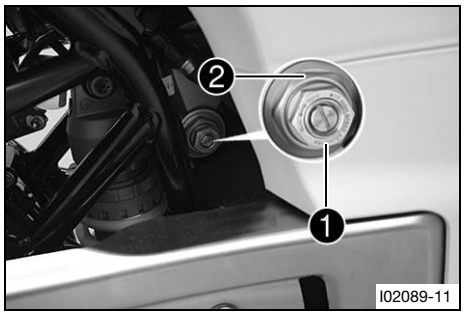

– Turn adjuster ❶ all the way clockwise with a socket wrench.

Do not loosen fitting ❷!

– Turn counterclockwise by the number of turns corresponding to the shock absorber type.

High-speed compression damping	
Standard	2 turns (720°)

Note
Turning clockwise increases damping; turning anti-clockwise reduces damping.

11.8 Adjusting the rebound damping of the shock absorber

CAUTION
Risk of injury Parts of the shock absorber will move erratically if the shock absorber is detached incorrectly.
The shock absorber is filled with highly compressed nitrogen.
– Please follow the description provided.

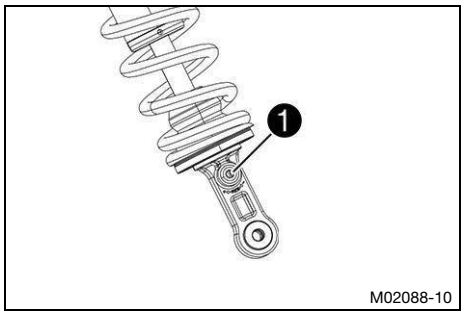

– Turn adjusting screw 1 clockwise up to the last perceptible click.
– Turn counterclockwise by the number of clicks corresponding to the shock absorber type.

Rebound damping	
Standard	15 clicks

Note
Turning clockwise increases damping; turning anti-clockwise reduces damping on rebound.

11.9 Handlebar position

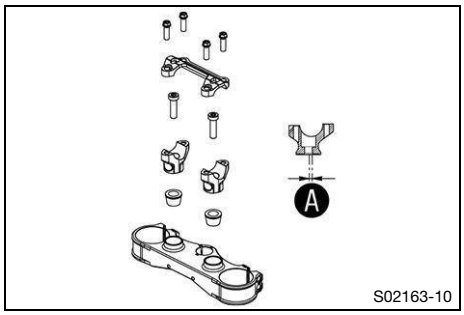

The holes on the handlebar supports are placed at a distance of A from the center.

Hole distance A	3.5 mm (0.138 in)

The handlebar can be mounted in 2 different positions. This allows the handlebar to be mounted in the most comfortable position for the rider.

11.10 Adjusting the handlebar position

WARNING

Danger of accidents A repaired handlebar poses a safety risk.

If the handlebar is bent or straightened, the material becomes fatigued. The handlebar may break as a result.

– Change the handlebar if the handlebar is damaged or bent.

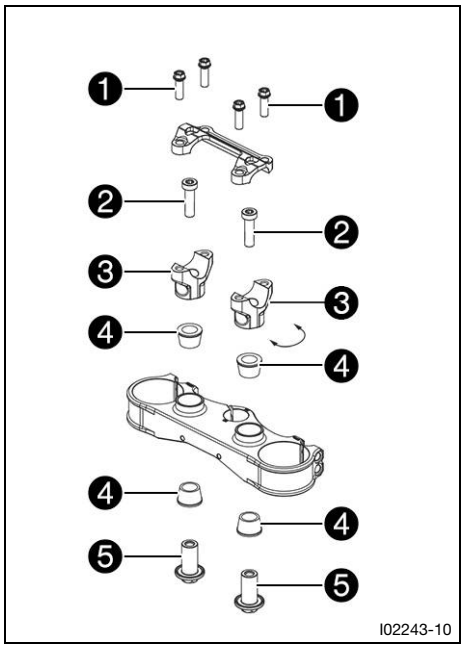

– Remove screws ❶. Take off the handlebar clamp. Remove the handlebar and lay it to one side.

Protect the components against damage by covering them.
Do not kink the cables or lines.

– Remove screws ❷. Take off handlebar supports ❸.
– Position rubber bushings ❹ and push through nuts ❺ from below.
– Place the handlebar supports in the required position.

Position the left and right handlebar supports evenly.

Note

The handlebar supports are longer and higher on one side.

– Mount and tighten screws ❷.

Screw, handlebar mount	
M10	45 Nm (33.2 ft·lb$_f$) **Loctite® 243**

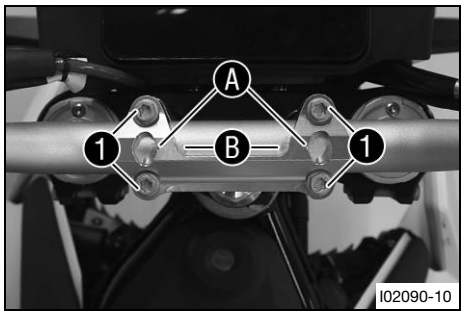

– Position the handlebar.

Make sure the cables and wiring are positioned correctly.

– Position the handlebar clamp.
– Mount screws ❶, but do not tighten yet.

Handlebar clamp screw	
M8	20 Nm (14.8 ft·lb$_f$)

✓ The handlebar clamp markings Ⓐ are aligned with the center line Ⓑ of the handlebar scale.

– Tighten screws ❶ evenly.

First bolt the handlebar clamp with screws ❶ onto the longer, higher side of the handlebar supports so that both parts touch.

Handlebar clamp screw	
M8	20 Nm (14.8 ft·lb$_f$)

12.1 Raising the motorcycle with rear lifting gear

NOTE

Material damage The vehicle may be damaged if parked incorrectly.

Damage can occur if the vehicle rolls away or falls over.

The components for parking the vehicle are designed only for the weight of the vehicle.

– Park the vehicle on a firm and level surface.
– Make sure that nobody sits on the vehicle when it is parked on a stand.

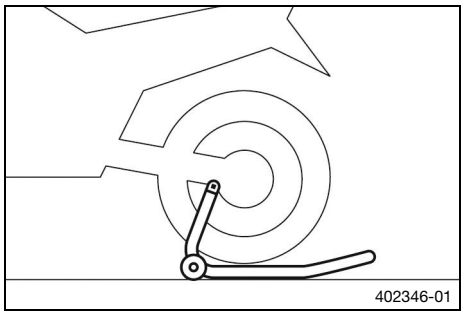

– Insert the adapter in the rear of the lifting gear and screw into the link fork on both sides.

Retaining adapter (69329955010)
Rear wheel work stand (69329955000)

– Position the motorcycle vertically, align the lifting gear, and raise the motorcycle.

12.2 Removing the rear of the motorcycle from the lifting gear

NOTE

Material damage The vehicle may be damaged if parked incorrectly.

Damage can occur if the vehicle rolls away or falls over.

The components for parking the vehicle are designed only for the weight of the vehicle.

– Park the vehicle on a firm and level surface.
– Make sure that nobody sits on the vehicle when it is parked on a stand.

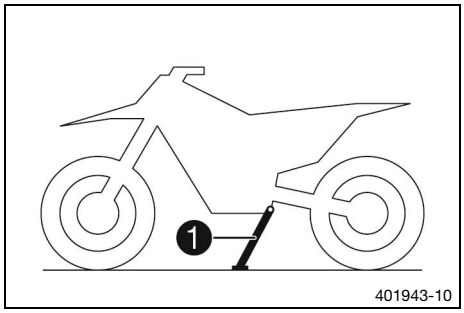

– Secure the motorcycle against falling over.
– Remove the rear lifting gear and lean the vehicle on side stand ❶.

12.3 Raising the motorcycle with a lift stand

NOTE

Material damage The vehicle may be damaged if parked incorrectly.

Damage can occur if the vehicle rolls away or falls over.

The components for parking the vehicle are designed only for the weight of the vehicle.

– Park the vehicle on a firm and level surface.
– Make sure that nobody sits on the vehicle when it is parked on a stand.

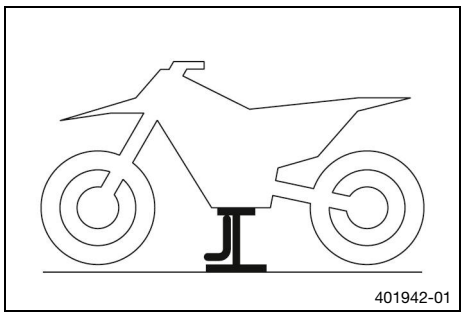

– Use the engine guard underneath the engine to raise the vehicle.
  ✓ Neither wheel is in contact with the ground.
– Secure the motorcycle against falling over.

12.4 Removing the motorcycle from the lift stand

NOTE

Material damage The vehicle may be damaged if parked incorrectly.
Damage can occur if the vehicle rolls away or falls over.
The components for parking the vehicle are designed only for the weight of the vehicle.
– Park the vehicle on a firm and level surface.
– Make sure that nobody sits on the vehicle when it is parked on a stand.

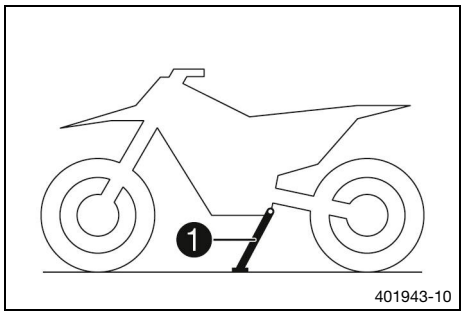

– Remove the motorcycle from the lift stand and rest it on side stand ❶.
– Remove the lift stand.

12.5 Cleaning the dust boots of the fork legs

Preparatory work

– Raise the motorcycle with a lift stand. (p. 90)
– Remove the fork protector. (p. 92)

Main work

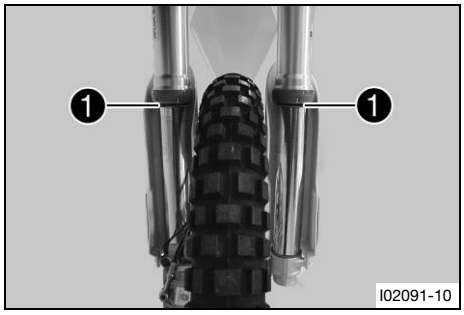

– Push dust boot ❶ downward on both fork legs.

Note

The dust boots should remove dust and coarse dirt particles from the inner fork tubes. Over time, dirt can accumulate behind the dust boots. If this dirt is not removed, the oil seals behind can start to leak.

WARNING

Danger of accidents Oil, grease or wax on the brake discs reduces the brake action.
– Always keep the brake discs free of oil, fat and wax.
– Clean the brake discs with brake cleaner when necessary.

– Clean and oil the dust boots and the inner fork tube of both fork legs.

Universal oil spray (p. 179)

– Press the dust boots back into their installation position.
– Remove excess oil.

Reworking

– Install the fork protector. (p. 92)
– Remove the motorcycle from the lift stand. (p. 91)

12.6 Removing the fork protector

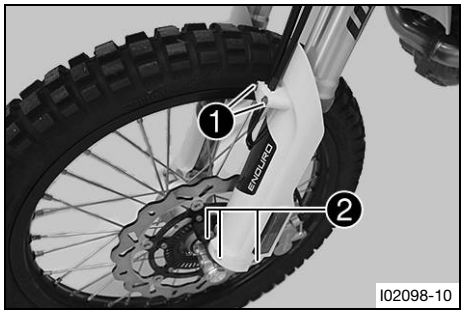

– Remove screw ❶ and take off the clamp.
– Remove screws ❷ on the left fork leg. Take off the fork protector.
– Remove screws ❷ on the right fork leg. Take off the fork protector.

12.7 Installing the fork protector

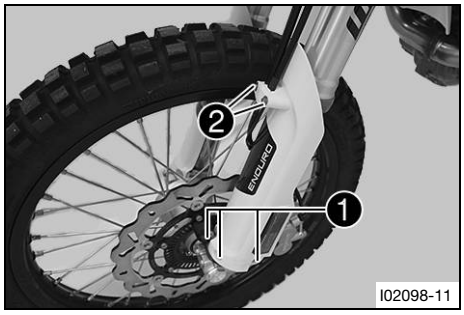

– Position the left fork protector. Mount and tighten screws ❶.

Remaining screws on chassis	
M6	10 Nm (7.4 ft·lb$_f$)

– Position the brake line, the wiring harness, and the clamp. Mount and tighten screws ❷.

Remaining EJOT screws	
EJOT PT®	2 Nm (1.5 ft·lb$_f$)

– Position the right fork protector. Mount and tighten screws ❶.

Remaining screws on chassis	
M6	10 Nm (7.4 ft·lb$_f$)

12.8 Bleeding the fork legs

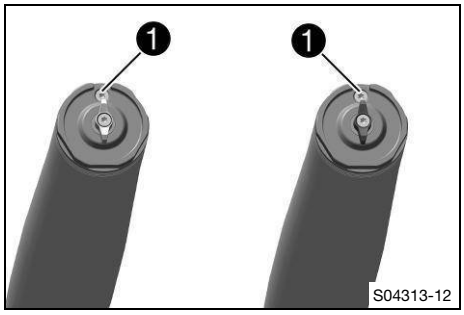

Preparatory work

– Raise the motorcycle with a lift stand. (p. 90)

Main work

– Loosen bleeder screw ❶.
  ✓ Any excess pressure escapes from the inner fork.
– Tighten the bleeder screw.

Reworking

– Remove the motorcycle from the lift stand. (p. 91)

12.9 Removing the seat

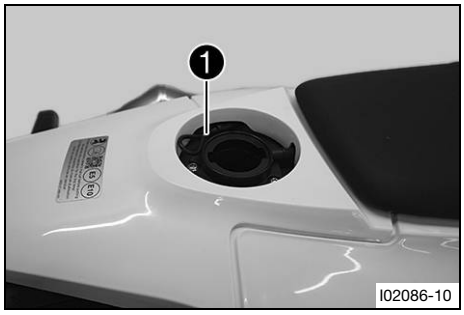

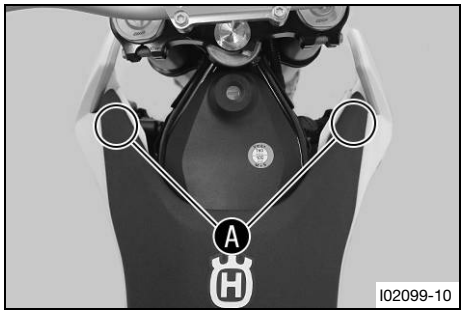

Preparatory work

– Open the fuel tank cap. (p. 28)

Main work

– Pull on loop ❶ and raise the rear of the seat.

– Pull seat out of the rubber bushings in areas Ⓐ.
– Pull the seat back and take it off to the rear.

Reworking

– Close the fuel tank cap. (p. 29)

12.10 Mounting the seat

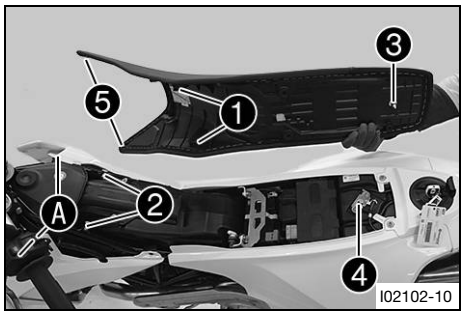

– Hook the seat using the holding lugs ❶ on to the bushings ❷, lower the seat at the rear and push it forward.
– Push locking pin ❸ into lock housing ❹ and push the back of the seat down until the locking pin locks in place with an audible click.
– Press holding lugs ❺ in areas Ⓐ into the rubber bushings.
– Check that the seat is correctly mounted.

12.11 Removing the tool set

Preparatory work

– Open the fuel tank cap. (p. 28)
– Remove the seat. (p. 93)

Main work

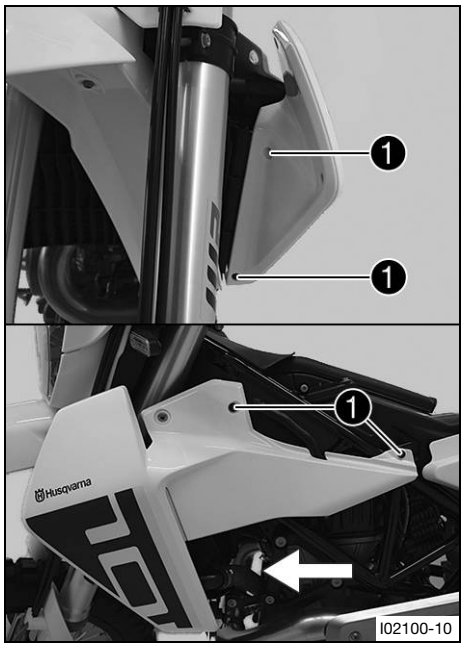

– Remove screws ❶ on the left side fairing.
– Take off the left side cover from the front.

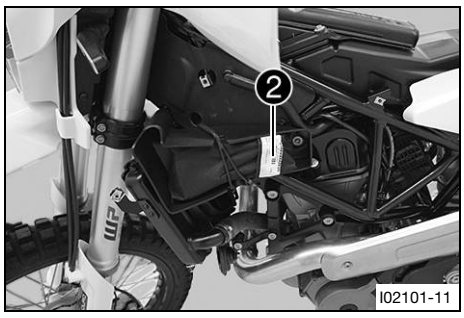

– Open the tool set compartment and take out tool set ❷.

12.12 Storing the tool set

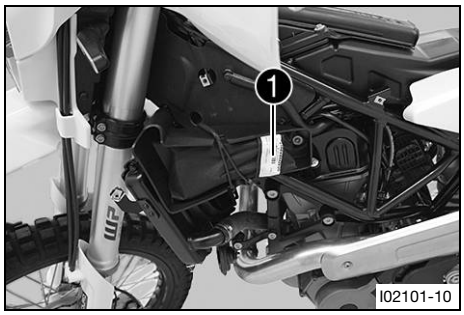

Main work

– Store tool set ❶ in the tool set compartment.

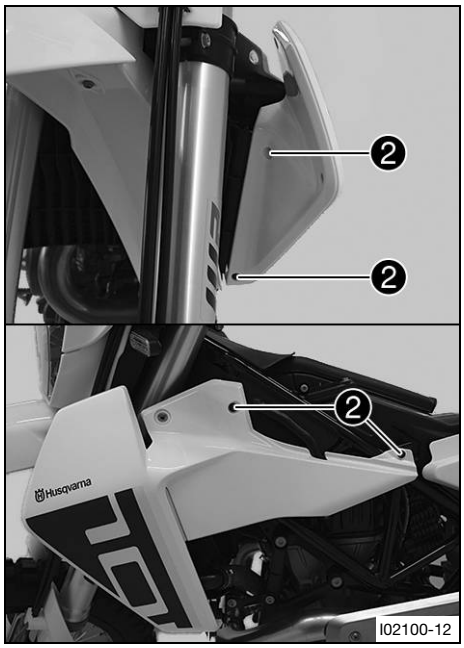

– Position the left side fairing.
– Mount and tighten screws ❷.

Screw, front trim	
M5	3.5 Nm (2.58 ft·lb$_f$)

Reworking

– Mount the seat. (p. 94)

12.13 Take off the side cover

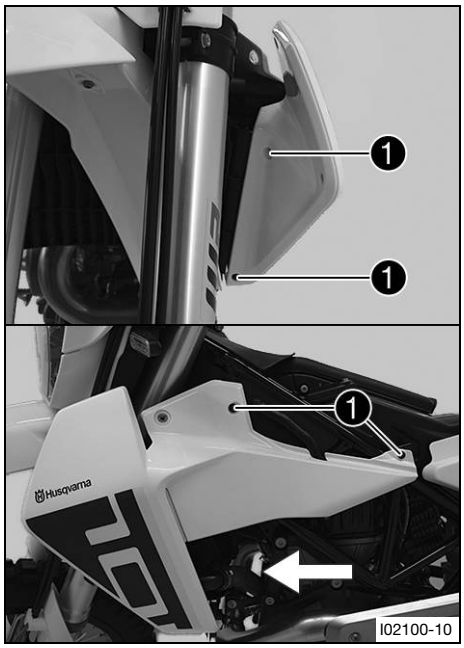

Preparatory work

– Open the fuel tank cap. (p. 28)
– Remove the seat. (p. 93)

Main work

– Remove screws ❶ on the left side fairing.
– Take off the left side cover from the front.
– Repeat these steps on the opposite side.

12.14 Mount the side cover

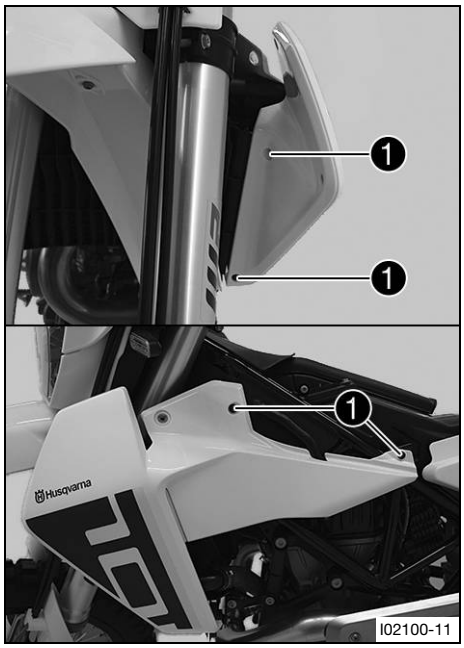

Main work

– Position the left side fairing.
– Mount and tighten screws ❶.

Screw, front trim	
M5	3.5 Nm (2.58 ft·lb$_f$)

– Repeat these steps on the opposite side.

Reworking

– Mount the seat. (p. 94)

12.15 Removing the front top fender

Preparatory work

– Removing the headlight with the headlight mask (p. 135)

Main work

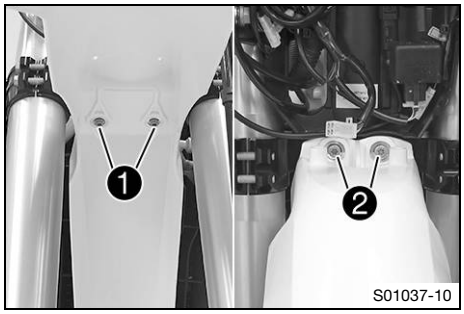

– Remove screws 1.
– Remove screws 2 and take off the fender.

12.16 Installing the front top fender

Main work

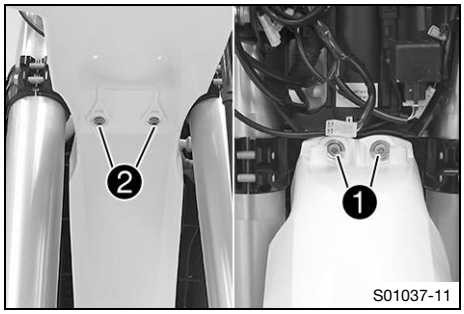

– Position the front fender. Mount and tighten screws 1.

Remaining screws on chassis	
M6	10 Nm (7.4 ft·lb_f)

– Mount and tighten screws 2.

Remaining screws on chassis	
M6	10 Nm (7.4 ft·lb_f)

Reworking

– Install the headlight with the headlight mask. (p. 135)
– Check the headlight setting. (p. 136)

12.17 Removing the air filter

NOTE

Engine failure Unfiltered intake air has a negative effect on the service life of the engine.
Dust and dirt can enter the engine if there is no air filter or if the air filter is mounted incorrectly.

– Only operate the vehicle if an air filter is correctly fitted.

Preparatory work

– Open the fuel tank cap. (p. 28)
– Remove the seat. (p. 93)

Main work

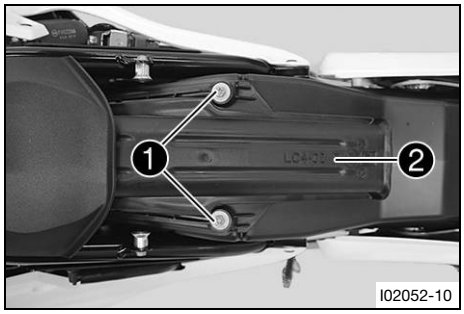

– Remove screws ❶.
– Remove the upper part of the air filter box ❷.

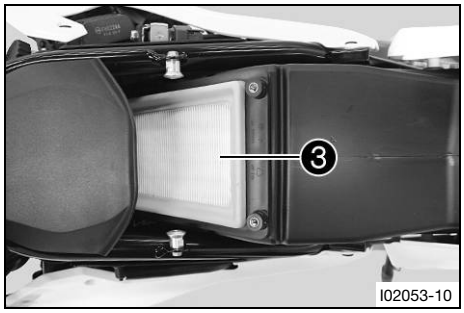

– Remove air filter ❸.

12.18 Installing the air filter

Main work

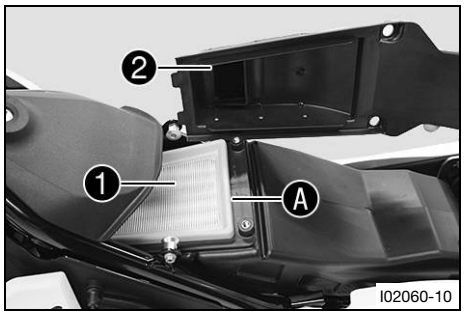

– Clean the air filter box.
– Mount air filter ❶.

The air filter must lie flush against the air filter box along the entire sealing surface Ⓐ.

Note
If the air filter is not mounted correctly, dust and dirt may enter the engine and result in damage.

– Hook air filter box top ❷ into the front of the air filter box and swing down.

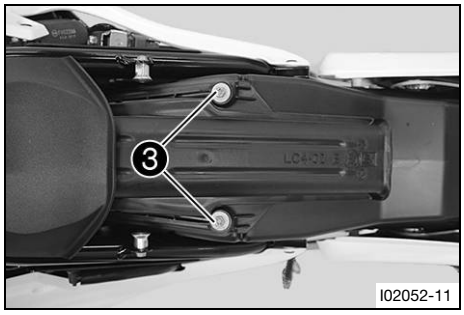

– Mount and tighten screws ❸.

Screw, upper part of the air filter box	
M6	5 Nm (3.7 ft·lb$_f$)

Reworking

– Mount the seat. (p. 94)

12.19 Checking the chain for dirt

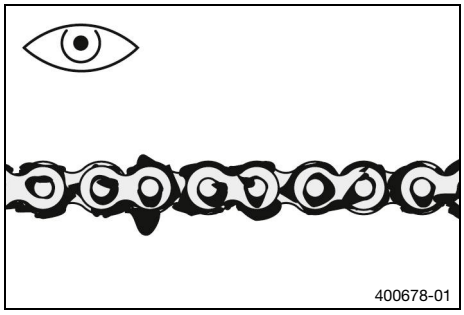

– Check the chain for coarse dirt accumulation.
  » If the chain is very dirty:
    – Clean the chain. (p. 99)

12.20 Cleaning the chain

WARNING
Danger of accidents Oil, grease or wax on the brake discs reduces the brake action.
– Always keep the brake discs free of oil, fat and wax.
– Clean the brake discs with brake cleaner when necessary.

WARNING
Danger of accidents Lubricants on the tires reduces the road grip.
– Remove lubricants from the tires using a suitable cleaning agent.

NOTE
Environmental hazard Hazardous substances cause environmental damage.
– Dispose of oils, grease, filters, fuel, cleaning agents, brake fluid, etc. correctly and in accordance with the applicable regulations.

Note
The service life of the chain depends largely on its maintenance.

Preparatory work
– Raise the motorcycle with a lift stand. (p. 90)

Main work
– Rinse off the loose dirt with a gentle jet of water.
– Remove old grease residues with a chain cleaner.

Chain cleaner (p. 183)

– After drying, apply chain spray.

Off-road chain spray (p. 179)

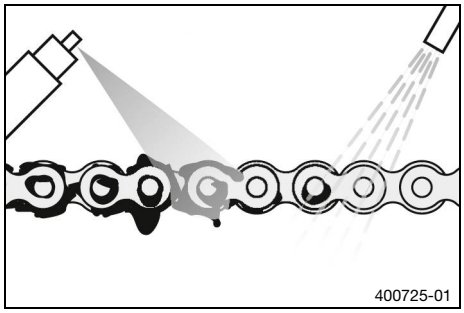

Reworking
– Remove the motorcycle from the lift stand. (p. 91)

12.21 Checking the chain tension

WARNING

Danger of accidents Incorrect chain tension can damage components and result in an accident.

If the chain is tension is too high, the chain, front sprocket, rear sprocket, transmission, and rear wheel bearings wear more quickly. Some components may break if overloaded.

If the chain is too loose, the chain may fall off the front sprocket or the rear sprocket. This can damage the rear wheel or the engine.

– Check the chain tension regularly.
– Set the chain tension in accordance with the specification.

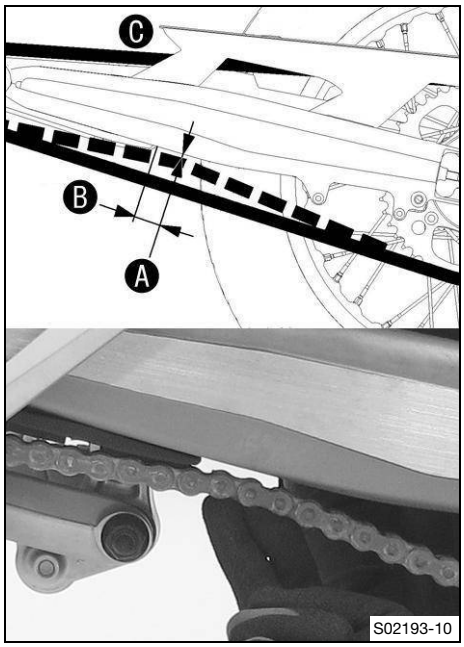

– Raise the motorcycle with the rear lifting gear. (p. 90)

Note

The check is also possible when the motorcycle is resting on the side stand.

– Shift the transmission into the neutral position.
– Push the chain upward at a distance B from the chain sliding guard and determine chain tension A.

Chain tension	5 mm (0.20 in)
Distance to chain sliding guard	30 mm (1.18 in)
The top part of chain C must be taut.	
Chain wear is not always even, so repeat this measurement at different positions on the chain.	

» If the chain tension does not meet the specification:
  – Adjust the chain tension. (p. 100)

– Remove the rear of the motorcycle from the lifting gear. (p. 90)

12.22 Adjusting the chain tension

WARNING

Danger of accidents Incorrect chain tension can damage components and result in an accident.

If the chain is tension is too high, the chain, front sprocket, rear sprocket, transmission, and rear wheel bearings wear more quickly. Some components may break if overloaded.

If the chain is too loose, the chain may fall off the front sprocket or the rear sprocket. This can damage the rear wheel or the engine.

– Check the chain tension regularly.
– Set the chain tension in accordance with the specification.

Preparatory work

– Check the chain tension. (p. 100)

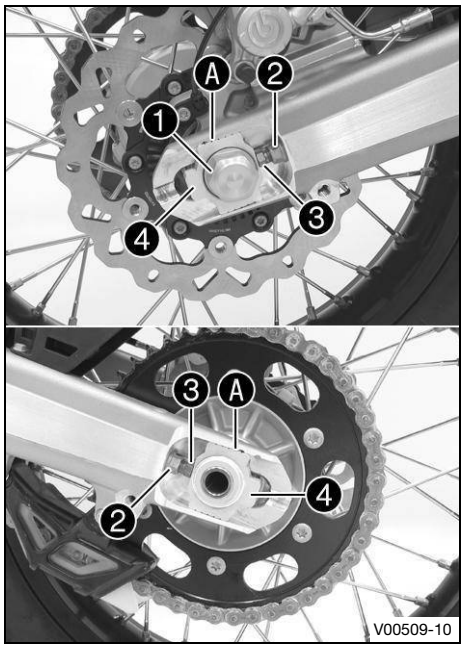

Main work

– Loosen nut ❶.
– Loosen nuts ❷.
– Adjust the chain tension by turning adjusting screws ❸ on the left and right.

Chain tension	5 mm (0.20 in)
In order for the rear wheel to be correctly aligned, the markings on the left and right chain adjusters must be in the same position relative to reference markings Ⓐ.	
The upper part of the chain must be taut.	
Chain wear is not always even, so repeat this measurement at different positions on the chain.	

– Tighten nuts ❷.
– Make sure that chain tension adjusters ❹ are fitted correctly on adjusting screws ❸.
– Tighten nut ❶.

Nut, wheel spindle, rear	
M25×1.5	90 Nm (66.4 ft·lb$_f$)

12.23 Checking the chain, rear sprocket, front sprocket, and chain guide

Preparatory work

– Raise the motorcycle with a lift stand. (p. 90)

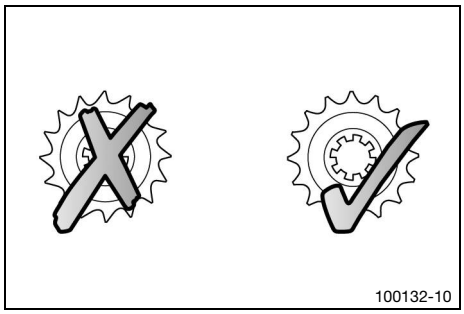

Main work

– Shift the transmission into the neutral position.
– Check the chain, rear sprocket, and front sprocket for wear.
  » If the chain, rear sprocket, or front sprocket is worn:
    – Change the drivetrain kit.

Always replace the front sprocket, rear sprocket, and chain together.

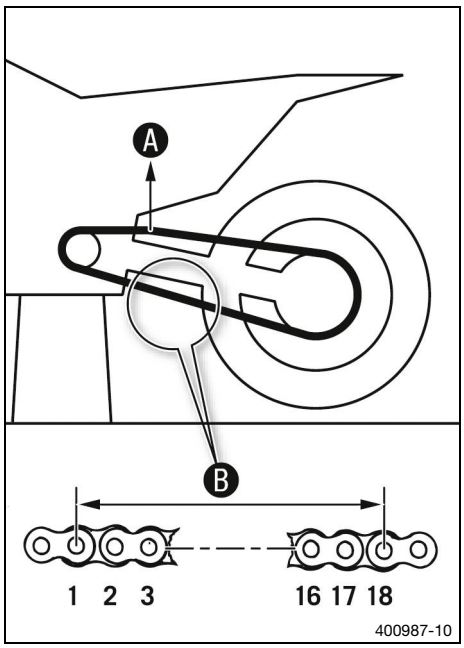

– Pull on the top section of the chain with the specified weight A.

Weight, chain wear measurement	15 kg (33.1 lb)

– Measure distance B of chain rollers in the lower chain section.

Maximum distance B of chain rollers at the longest chain section	272 mm (10.71 in)
Chain wear is not always even, so repeat this measurement at different positions on the chain.	

» If distance B is greater than the specified measurement:
  – Change the drivetrain kit.

When installing a new chain, also replace the rear sprocket and front sprocket.

Note
New chains wear out faster on old, worn front or rear sprockets.

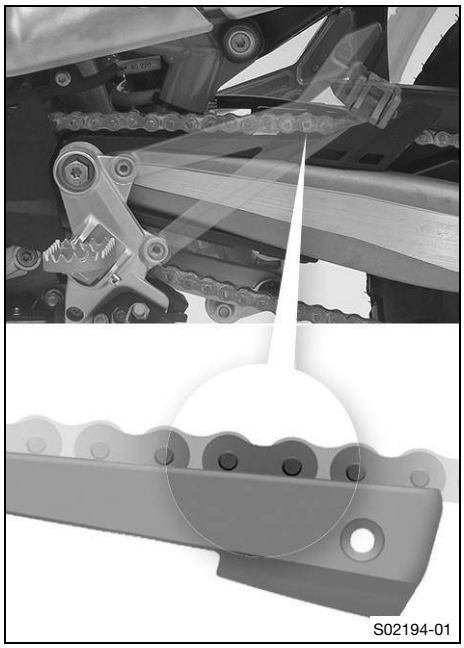

– Check the chain slider at the top for wear.
  » If the lower edge of the chain pins is in line with, or below, the chain slider:
    – Change the chain slider.
– Check that the chain slider is firmly seated.
  » If the chain slider is loose:
    – Tighten the screws of the chain slider.

Screw, chain slider guard	
M6	10 Nm (7.4 ft·lb$_f$) **Loctite® 243**

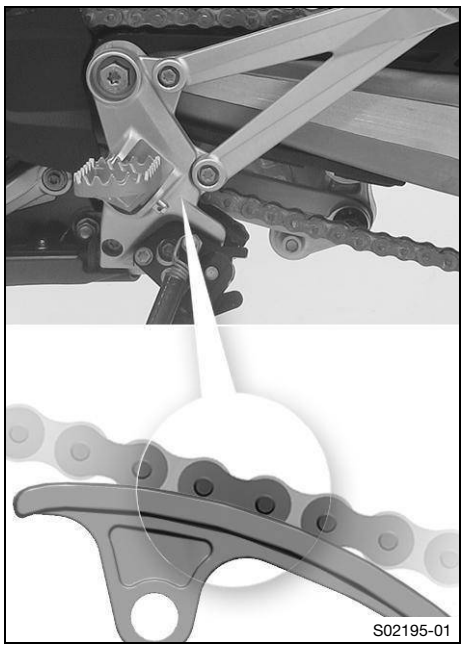

– Check the chain slider for wear.
  » If the lower edge of the chain pins is in line with or below the chain slider:
    – Change the chain slider.
– Check that the chain slider is firmly seated.
  » If the chain slider is loose:
    – Tighten the screws of the chain slider.

Screw, chain slider	
M8	15 Nm (11.1 ft·lb$_f$) **Loctite® 243**

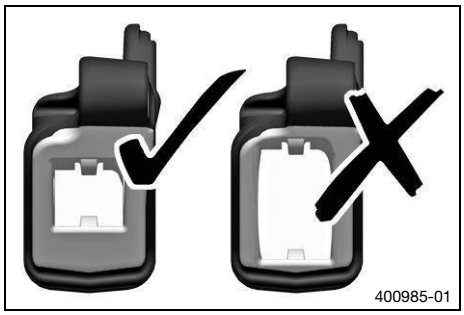

– Check the chain guide for wear.

Note
Wear can be seen on the front of the chain guide.

» If the light part of the chain guide is worn:
  – Change the chain guide.

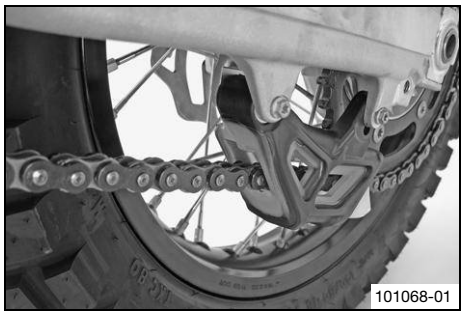

– Check that the chain guide is firmly seated.
  » If the chain guide is loose:
    – Tighten the screws on the chain guide.

Remaining screws on chassis	
M6	10 Nm (7.4 ft·lb$_f$)

Reworking

– Remove the motorcycle from the lift stand. (p. 91)

12.24 Adjusting the chain guide

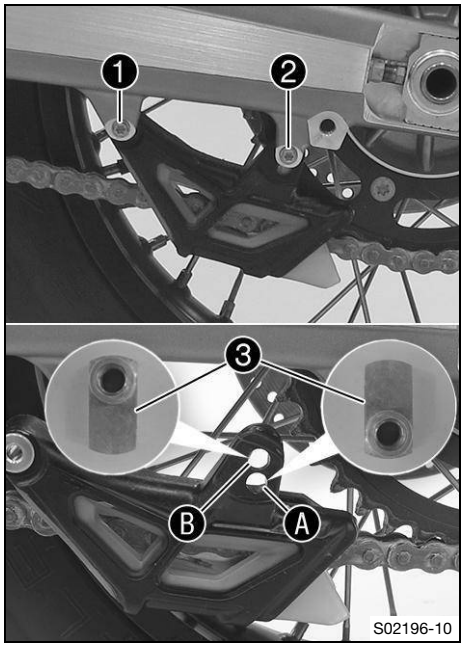

– Remove screws ❶ and ❷. Take off the chain guide.

Condition: Number of teeth: ≤ 44 teeth

– Insert nut ❸ in hole Ⓐ. Position the chain guide.
– Mount and tighten screws ❶ and ❷.

Screw, chain guide	
M6	10 Nm (7.4 ft·lb$_f$)

Condition: Number of teeth: ≥ 45 teeth

– Insert nut ❸ in hole Ⓑ. Position the chain guide.
– Mount and tighten screws ❶ and ❷.

Screw, chain guide	
M6	10 Nm (7.4 ft·lb$_f$)

12.25 Checking the hand grip

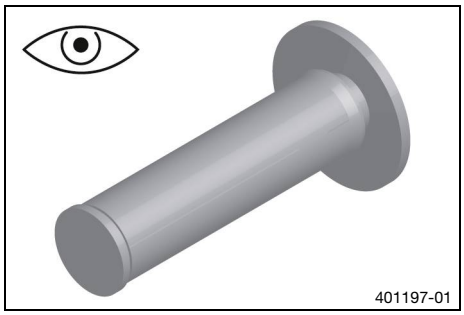

– Check the hand grips on the handlebar for damage, wear, and that they are firmly seated.

Note

The hand grips are vulcanized onto a sleeve on the left and onto the grip tube of the throttle grip on the right. The left sleeve is clamped onto the handlebar.

The hand grip can only be replaced with the sleeve or the gas pipe.

» If a hand grip is damaged or worn:
  – Replace the hand grip.

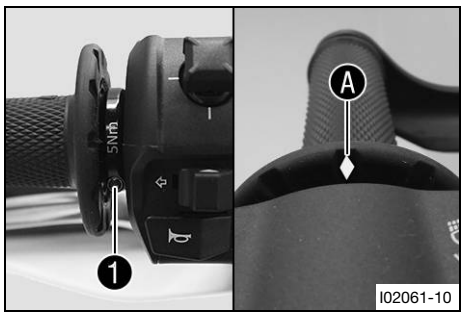

– Check that screw ❶ is firmly seated.

Screw, fixed grip	
M4	5 Nm (3.7 ft·lb$_f$) **Loctite® 243**

Diamond Ⓐ must be located at the top.

12.26 Adjusting the basic position of the clutch lever

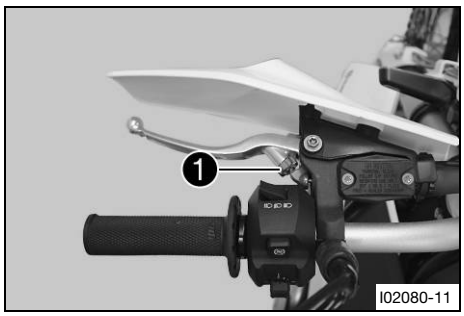

– Adjust the basic position of the clutch lever to your hand size by turning adjusting wheel ❶.
– Push the clutch lever forward and turn the adjusting wheel.

Only turn the adjusting wheel by hand; do not use force.
Do not make any adjustments while riding.

Note

Turn the setting wheel counterclockwise to decrease the distance between the clutch lever and the handlebar.

Turn the setting wheel clockwise to increase the distance between the clutch lever and the handlebar.

The range of adjustment is limited.

– When adjusting the clutch lever, make sure to leave a minimum clearance to other parts of the vehicle.

Minimum distance	5 mm (0.20 in)

12.27 Checking/correcting the fluid level of hydraulic clutch

WARNING

Health hazard Brake fluid is a harmful substance.

– Keep brake fluid out of the reach of children.
– Wear suitable protective clothing and safety glasses.
– Do not allow brake fluid to come into contact with the skin, the eyes, or clothing.
– Consult a doctor immediately if brake fluid has been ingested.
– Rinse the affected area with plenty of water in the event of contact with the skin.
– Rinse eyes thoroughly with water immediately and consult a doctor if brake fluid comes into contact with the eyes.
– If brake fluid spills on to your clothing, change the clothing.

NOTE

Environmental hazard Hazardous substances cause environmental damage.

– Dispose of oils, grease, filters, fuel, cleaning agents, brake fluid, etc. correctly and in accordance with the applicable regulations.

Note
The fluid level rises with increasing wear of the friction plates.
Avoid contact between brake fluid and painted parts. Brake fluid corrodes paint.

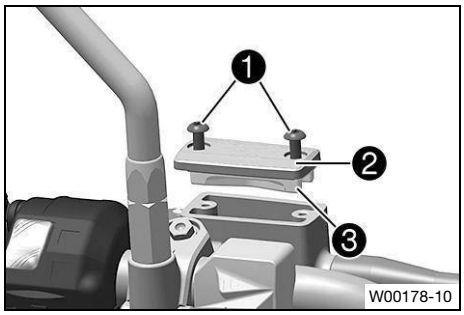

– Move the hydraulic clutch fluid reservoir mounted on the handlebar into a horizontal position.
– Remove screws ❶.
– Take off cover ❷ with diaphragm ❸.
– Check the fluid level.

Fluid level below reservoir rim	5 mm (0.20 in)

» If the fluid level does not meet the specifications:
  – Correct the fluid level of the hydraulic clutch.

Brake fluid DOT 5.1 (p. 180)

– Position the cover with diaphragm. Mount and tighten the screws.

Immediately clean up any brake fluid that has overflowed or spilled with water.

12.28 Removing the skid plate

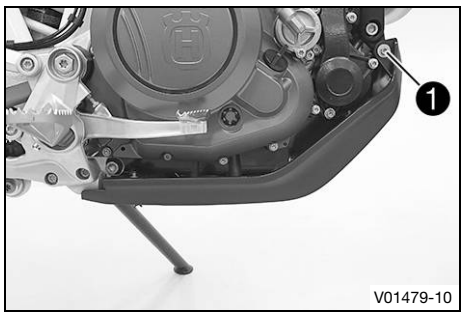

– Remove screws ❶ on both sides.
– Pull the engine guard forward out of the holders and remove it.

12.29 Installing the skid plate

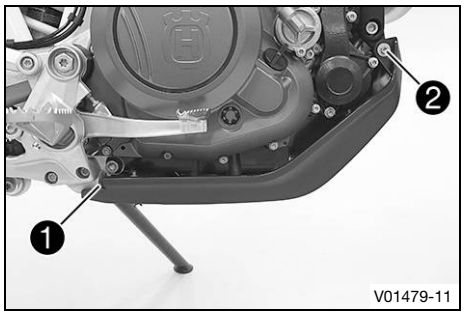

– Slide the rear engine guard into holders ❶ on both sides.
– Position the motor guard. Mount and tighten screws ❷ on both sides.

Remaining screws on chassis	
M6	10 Nm (7.4 ft·lb$_f$)

13.1 Anti-lock braking system

WARNING

Danger of accidents Changes to the vehicle impair the function of the ABS.

- Do not make any changes to the suspension travel.
- Only use spare parts on the brake system which have been approved and recommended by the vehicle manufacturer.
- Only use tires and wheels approved and recommended by the vehicle manufacturer with the corresponding speed rating.
- Maintain the specified tire pressure.
- Ensure that service work and repairs are performed professionally.

WARNING

Danger of accidents Driving aids can reduce the probability of a fall only within physical limits.

It is not always possible to compensate for certain riding situations, for example with luggage loaded with a high center of gravity, varying road surfaces, steep descents or full braking without disengaging the gear.

- Adapt your riding style to the road conditions and your driving ability.

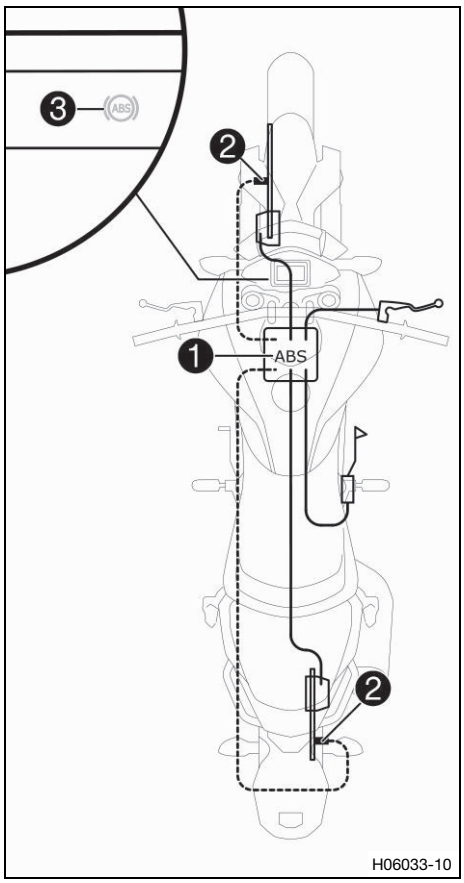

The **ABS** module ❶, which consists of a hydraulic unit, ABS control unit, and return pump, is installed under the fuel tank. One wheel speed sensor ❷ is located in each case on the front and the rear wheel.

WARNING
Danger of accidents An incorrectly selected ABS mode makes it more difficult to control the vehicle. The ABS modes are each only suitable for certain conditions.
– Always select an ABS mode that suits the ground and the riding situation.

The **ABS** is a safety system that prevents the wheels locking when driving straight ahead or when cornering (within the limits of physics).
ABS has two operating modes: the **Road** and **Offroad** ABS modes.
In ABS mode **Road**, ABS controls both wheels.
In ABS mode **Offroad**, there is no ABS control on the rear wheel.

Note
The curve dependent control is only active in ABS mode **Road**.

The ABS operates with two independent brake circuits (front and rear brakes). When the ABS control unit detects a locking tendency in a wheel, ABS begins regulating the brake pressure. The control function causes a slight pulsing of the hand and foot brake levers.
The ABS warning light ❸ must light up after the ignition is switched on and go out after starting off. If it does not go out after starting off or if it is lit while riding, this indicates a fault in the ABS. In this case, the ABS is no longer enabled and the wheels may lock during braking. The brake system itself stays functional; only ABS control is not available.
The ABS warning lamp may also light up if the rotating speeds of the front and rear wheels differ greatly under extreme riding conditions, for example when making "wheelies" or if the rear wheel spins. This causes the ABS to switch off.
To reactivate the ABS, stop the vehicle and switch off the ignition. The ABS is reactivated when the vehicle is switched on again. The ABS warning light goes out after starting off.

Note
The motorcycle has an additional 5-D sensor. The 5-D sensor makes the ABS control dependent on the angle of inclination and pitch. This can prevent locking and slipping of the wheels during braking when the vehicle is inclined (when cornering) within the physical limitations.

13.2 Adjusting the basic position of the hand brake lever

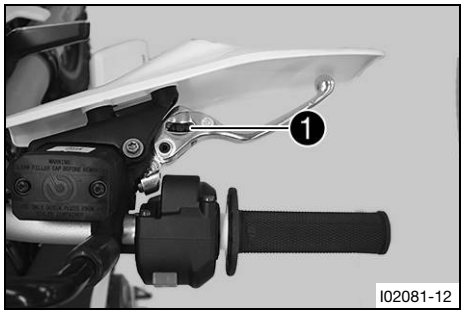

– Adjust the basic position of the hand brake lever to your hand size by turning adjusting wheel ❶.
– Push the hand brake lever forward and turn the adjusting wheel.

Do not make any adjustments while riding.
Only turn the adjusting wheel by hand; do not use force.

Note
Turn the adjusting wheel counterclockwise to decrease the distance between the hand brake lever and the handlebar.
Turn the adjusting wheel clockwise to increase the distance between the hand brake lever and the handlebar.
The range of adjustment is limited.

– When adjusting the brake lever, make sure to leave a minimum clearance to other parts of the vehicle.

Minimum distance	5 mm (0.20 in)

13.3 Checking the brake discs

WARNING
Danger of accidents Worn-out brake discs reduce the braking action.
– Make sure that worn-out brake discs are replaced immediately.

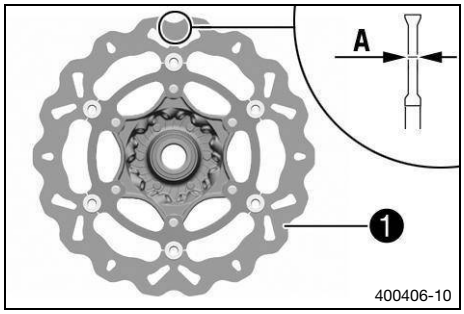

– Check the brake disc thickness of the front and rear brake disc at several places on the disc to see if they conform to measurement A.

Brake disc wear limit	
front	4.5 mm (0.177 in)
rear	4.5 mm (0.177 in)

Note
Wear will reduce the thickness of the brake disc at contact surface 1 of the brake linings.

» If the brake disc thickness is less than the specified value.
  – Change brake disc.

– Check the front and rear brake discs for damage, cracks, and deformation.
  » If the brake disc shows signs of damage, cracks, or deformation:
    – Change brake disc.

13.4 Checking the brake fluid level for the front brake

WARNING
Danger of accidents Brake fluid which is too old or of the wrong type impairs the function of the brake system.
– Make sure that brake fluid for the front and rear brake is changed in accordance with the service schedule.
– Make sure that only clean, approved brake fluid from a tightly sealed container is used.

WARNING
Danger of accidents An insufficient brake fluid level will cause the brake system to fail.
If the brake fluid level drops below the specified marking or the specified value, the brake system has a leak or the brake pads are worn down.
– Have the brake system checked and make sure that the problem has been eliminated before the vehicle is used again.

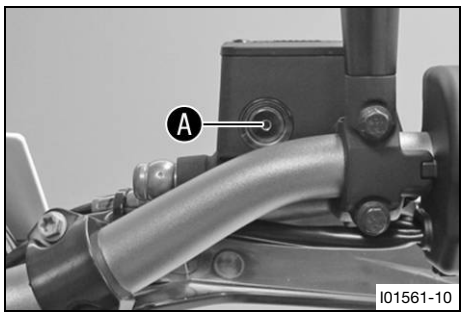

– Move the brake reservoir mounted on the handlebar to a horizontal position.
– Check the brake fluid level in the level viewer.
  » If the brake fluid level has fallen below marking A:
    – Add brake fluid for the front brake. (p. 110)

13.5 Adding brake fluid for the front brake

WARNING
Danger of accidents Brake fluid which is too old or of the wrong type impairs the function of the brake system.
– Make sure that brake fluid for the front and rear brake is changed in accordance with the service schedule.
– Make sure that only clean, approved brake fluid from a tightly sealed container is used.

WARNING
Danger of accidents An insufficient brake fluid level will cause the brake system to fail.
If the brake fluid level drops below the specified marking or the specified value, the brake system has a leak or the brake pads are worn down.
– Have the brake system checked and make sure that the problem has been eliminated before the vehicle is used again.

WARNING
Health hazard Brake fluid is a harmful substance.
– Keep brake fluid out of the reach of children.
– Wear suitable protective clothing and safety glasses.
– Do not allow brake fluid to come into contact with the skin, the eyes, or clothing.
– Consult a doctor immediately if brake fluid has been ingested.
– Rinse the affected area with plenty of water in the event of contact with the skin.
– Rinse eyes thoroughly with water immediately and consult a doctor if brake fluid comes into contact with the eyes.
– If brake fluid spills on to your clothing, change the clothing.

NOTE
Environmental hazard Hazardous substances cause environmental damage.
– Dispose of oils, grease, filters, fuel, cleaning agents, brake fluid, etc. correctly and in accordance with the applicable regulations.

Note
Avoid contact between brake fluid and painted parts. Brake fluid corrodes paint.

Preparatory work
– Check that the brake pads of the front brake are secured. (p. 111)

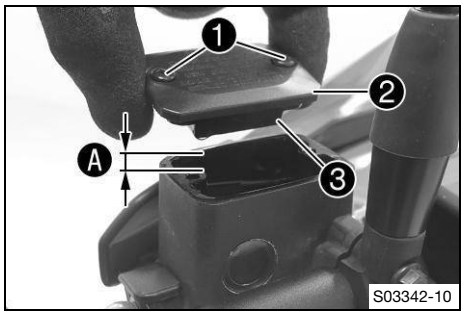

Main work

– Move the brake reservoir mounted on the handlebar to a horizontal position.
– Remove screws ❶.
– Take off cover ❷ with diaphragm ❸.
– Add brake fluid up to level Ⓐ.

Level Ⓐ (brake fluid level below reservoir rim)	5 mm (0.20 in)

Brake fluid DOT 5.1 (p. 180)

– Position the cover with diaphragm. Mount and tighten the screws.

Immediately clean up any brake fluid that has overflowed or spilled with water.

13.6 Checking that the brake pads of the front brake are secured

WARNING
Danger of accidents Worn brake pads reduce the brake action.
– Make sure that worn brake pads are replaced immediately.

WARNING
Danger of accidents Damaged brake discs reduce the braking action.
If the brake linings are not changed in time, the brake lining carriers grind against the brake disc. As a consequence, the brake action is greatly reduced and the brake discs are destroyed.
– Check the brake linings regularly.

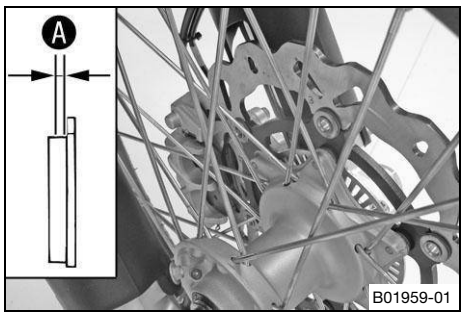

– Check all brake pads on both brake calipers for their lining thickness Ⓐ.

Minimum pad thickness Ⓐ	≥ 1 mm (≥ 0.04 in)

» If it is less than the minimum thickness:
  – Change the front brake pads. (p. 112)
– Check the brake pads for damage and cracking.
» If there is damage or cracking:
  – Change the front brake pads. (p. 112)
– Check that the brake pads are secured.
» If the brake pads are not secured correctly:
  – Secure brake pads, replace with new parts if necessary.

13.7 Changing the brake pads of the front brake

WARNING
Danger of accidents Brake pads which have not been approved alter the braking action.
– Only use brake pads approved and recommended by the vehicle manufacturer.

WARNING
Danger of accidents Incorrect servicing will cause the brake system to fail.
– Ensure that service work and repairs are performed professionally.

WARNING
Danger of accidents Brake fluid which is too old or of the wrong type impairs the function of the brake system.
– Make sure that brake fluid for the front and rear brake is changed in accordance with the service schedule.
– Make sure that only clean, approved brake fluid from a tightly sealed container is used.

WARNING
Danger of accidents Oil, grease or wax on the brake discs reduces the brake action.
– Always keep the brake discs free of oil, fat and wax.
– Clean the brake discs with brake cleaner when necessary.

WARNING
Health hazard Brake fluid is a harmful substance.
– Keep brake fluid out of the reach of children.
– Wear suitable protective clothing and safety glasses.
– Do not allow brake fluid to come into contact with the skin, the eyes, or clothing.
– Consult a doctor immediately if brake fluid has been ingested.
– Rinse the affected area with plenty of water in the event of contact with the skin.
– Rinse eyes thoroughly with water immediately and consult a doctor if brake fluid comes into contact with the eyes.
– If brake fluid spills on to your clothing, change the clothing.

NOTE
Environmental hazard Hazardous substances cause environmental damage.
– Dispose of oils, grease, filters, fuel, cleaning agents, brake fluid, etc. correctly and in accordance with the applicable regulations.

Note
Avoid contact between brake fluid and painted parts. Brake fluid corrodes paint.

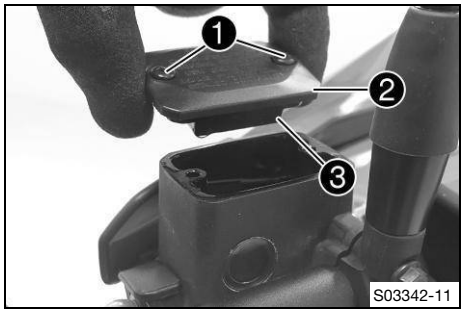

– Move the brake reservoir mounted on the handlebar to a horizontal position.
– Remove screws ❶.
– Take off cover ❷ with diaphragm ❸.
– Manually press the brake caliper toward the brake disc to push back the brake pistons. Ensure that brake fluid does not flow out of the brake fluid reservoir; extract some if necessary.

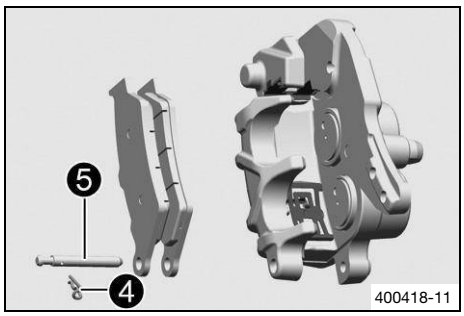

– Remove cotter pin ❹, remove pin ❺ toward the right by striking it, and remove the brake linings.
– Clean brake caliper and brake caliper support.

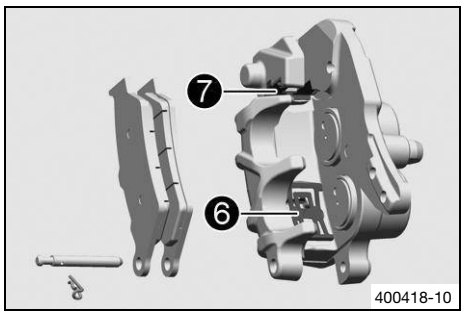

– Check that spring steel clip ❻ in the brake caliper and brake pad guide plate ❼ in the brake caliper support are properly seated.
– Insert the new brake linings, insert the pin, and mount the cotter pins.

Always replace brake pads in sets.

– Operate the hand brake lever repeatedly until the brake pads are in contact with the brake disc and a pressure point is reached.

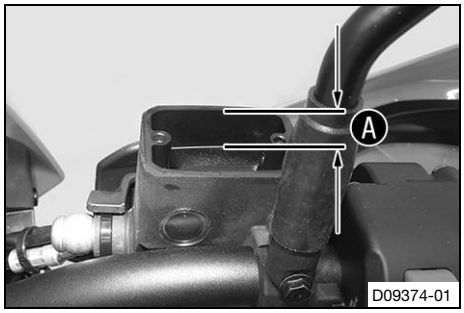

– Correct the brake fluid level to level Ⓐ.

Level Ⓐ (brake fluid level below reservoir rim)	5 mm (0.20 in)

Brake fluid DOT 5.1 (p. 180)

– Position the cover with diaphragm. Mount and tighten the screws.

Immediately clean up any brake fluid that has overflowed or spilled with water.

13.8 Checking the free travel of the brake pedal

WARNING
Danger of accidents The brake system fails in the event of overheating.
If there is no free travel on the brake lever, pressure builds up in the brake system.
– Set the free travel on the brake lever as specified.

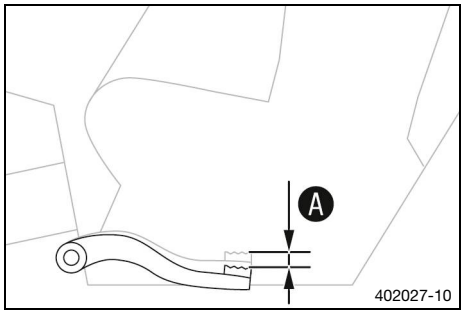

– Move the brake pedal back and forth between the end stop and the brake pedal cylinder piston actuation and check free travel Ⓐ.

Free travel of brake pedal	3 mm … 5 mm (0.12 in … 0.20 in)

Note
You will know that contact has been made with the foot brake cylinder piston when there is increased resistance when you activate the foot brake lever.

» If the free travel does not meet the specifications:
  – Adjust the basic position of the brake pedal. (p. 114)

13.9 Adjusting the basic position of the brake pedal

WARNING
Danger of accidents The brake system fails in the event of overheating.
If there is no free travel on the brake lever, pressure builds up in the brake system.
– Set the free travel on the brake lever as specified.

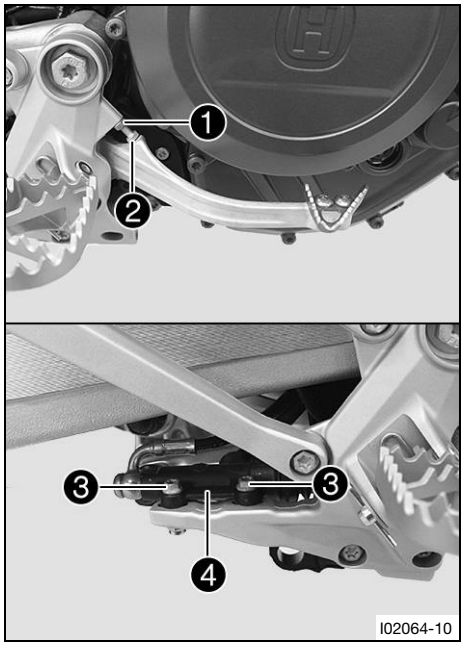

– Loosen fittings ❸ on rear brake cylinder ❹.
– To adjust the basic position of the brake pedal to individual requirements, loosen nut ❶ and turn screw ❷ accordingly.

The screw must be screwed into the footrest bracket by at least four turns.

Note
The range of adjustment is limited.

– Position rear brake cylinder ❹ so that the foot brake lever has the necessary free travel.

Free travel of brake pedal	3 mm … 5 mm (0.12 in … 0.20 in)

– Tighten fittings ❸.

Fitting on rear brake cylinder	
M6	10 Nm (7.4 ft·lb$_f$)

– Check the free travel of the brake pedal. (p. 113)
– Tighten nut ❶.

Remaining nuts on chassis	
M6	10 Nm (7.4 ft·lb$_f$)

13.10 Checking the brake fluid level for the rear brake

WARNING
Danger of accidents Brake fluid which is too old or of the wrong type impairs the function of the brake system.
– Make sure that brake fluid for the front and rear brake is changed in accordance with the service schedule.
– Make sure that only clean, approved brake fluid from a tightly sealed container is used.

WARNING
Danger of accidents An insufficient brake fluid level will cause the brake system to fail.
If the brake fluid level drops below the specified marking or the specified value, the brake system has a leak or the brake pads are worn down.
– Have the brake system checked and make sure that the problem has been eliminated before the vehicle is used again.

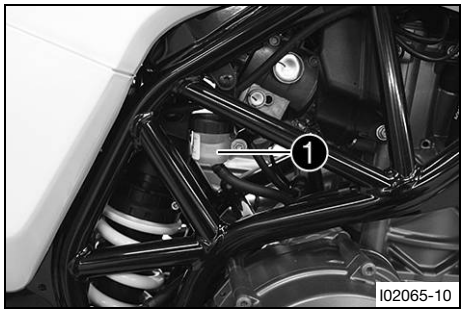

– Stand the vehicle upright.
– Check the brake fluid level in the brake fluid reservoir.
  » If the fluid level reaches the **MIN** marking ❶:
    – Add brake fluid for the rear brake. (p. 115)

13.11 Adding brake fluid for the rear brake

WARNING
Danger of accidents Brake fluid which is too old or of the wrong type impairs the function of the brake system.
– Make sure that brake fluid for the front and rear brake is changed in accordance with the service schedule.
– Make sure that only clean, approved brake fluid from a tightly sealed container is used.

WARNING
Danger of accidents An insufficient brake fluid level will cause the brake system to fail.
If the brake fluid level drops below the specified marking or the specified value, the brake system has a leak or the brake pads are worn down.
– Have the brake system checked and make sure that the problem has been eliminated before the vehicle is used again.

WARNING
Health hazard Brake fluid is a harmful substance.
– Keep brake fluid out of the reach of children.
– Wear suitable protective clothing and safety glasses.
– Do not allow brake fluid to come into contact with the skin, the eyes, or clothing.
– Consult a doctor immediately if brake fluid has been ingested.
– Rinse the affected area with plenty of water in the event of contact with the skin.
– Rinse eyes thoroughly with water immediately and consult a doctor if brake fluid comes into contact with the eyes.
– If brake fluid spills on to your clothing, change the clothing.

NOTE

Environmental hazard Hazardous substances cause environmental damage.

– Dispose of oils, grease, filters, fuel, cleaning agents, brake fluid, etc. correctly and in accordance with the applicable regulations.

Note

Avoid contact between brake fluid and painted parts. Brake fluid corrodes paint.

Preparatory work

– Check that the brake pads of the rear brake are secured. (p. 116)

Main work

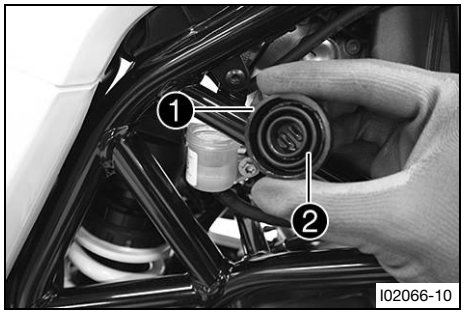

– Stand the vehicle upright.
– Remove screw cap ❶ with the washer and membrane ❷.
– Add brake fluid up to the **MAX** marking.

Brake fluid DOT 5.1 (p. 180)

– Mount the screw cover with washer and the membrane.

Immediately clean up any brake fluid that has overflowed or spilled using water.

13.12 Checking that the brake pads of the rear brake are secured

WARNING

Danger of accidents Worn brake pads reduce the brake action.

– Make sure that worn brake pads are replaced immediately.

WARNING

Danger of accidents Damaged brake discs reduce the braking action.

If the brake linings are not changed in time, the brake lining carriers grind against the brake disc. As a consequence, the brake action is greatly reduced and the brake discs are destroyed.

– Check the brake linings regularly.

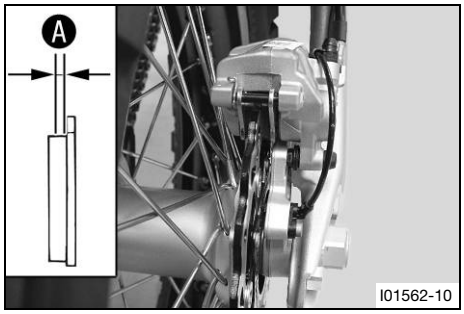

– Check all brake pads on both brake calipers for their lining thickness Ⓐ.

Minimum pad thickness Ⓐ	≥ 1 mm (≥ 0.04 in)

» If it is less than the minimum thickness:
  – Change the rear brake pads. (p. 117)

– Check the brake pads for damage and cracking.
» If there is damage or cracking:
  – Change the rear brake pads. (p. 117)

– Check that the brake pads are secured.
» If the brake pads are not secured correctly:
  – Secure brake pads, replace with new parts if necessary.

13.13 Changing the rear brake pads

WARNING
Danger of accidents Brake pads which have not been approved alter the braking action.
– Only use brake pads approved and recommended by the vehicle manufacturer.

WARNING
Danger of accidents Incorrect servicing will cause the brake system to fail.
– Ensure that service work and repairs are performed professionally.

WARNING
Danger of accidents Brake fluid which is too old or of the wrong type impairs the function of the brake system.
– Make sure that brake fluid for the front and rear brake is changed in accordance with the service schedule.
– Make sure that only clean, approved brake fluid from a tightly sealed container is used.

WARNING
Danger of accidents Oil, grease or wax on the brake discs reduces the brake action.
– Always keep the brake discs free of oil, fat and wax.
– Clean the brake discs with brake cleaner when necessary.

WARNING
Health hazard Brake fluid is a harmful substance.
– Keep brake fluid out of the reach of children.
– Wear suitable protective clothing and safety glasses.
– Do not allow brake fluid to come into contact with the skin, the eyes, or clothing.
– Consult a doctor immediately if brake fluid has been ingested.
– Rinse the affected area with plenty of water in the event of contact with the skin.
– Rinse eyes thoroughly with water immediately and consult a doctor if brake fluid comes into contact with the eyes.
– If brake fluid spills on to your clothing, change the clothing.

NOTE
Environmental hazard Hazardous substances cause environmental damage.
– Dispose of oils, grease, filters, fuel, cleaning agents, brake fluid, etc. correctly and in accordance with the applicable regulations.

Note
Avoid contact between brake fluid and painted parts. Brake fluid corrodes paint.

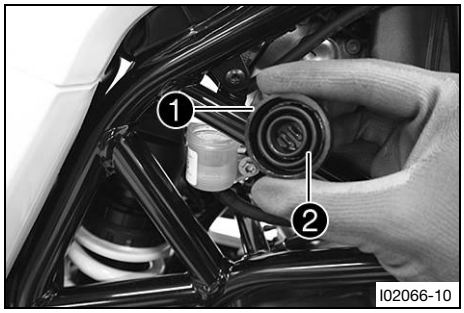

– Stand the vehicle upright.
– Remove screw cap ❶ with the washer and membrane ❷.
– Manually press the brake caliper toward the brake disc to push back the brake pistons. Ensure that brake fluid does not flow out of the brake fluid reservoir; extract some if necessary.

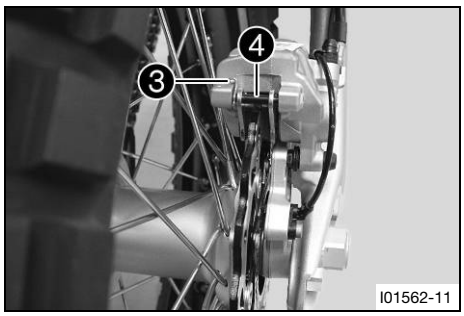

– Remove cotter pin ❸, remove pin ❹ toward the left by striking it, and remove the brake linings.
– Clean brake caliper and brake caliper support.

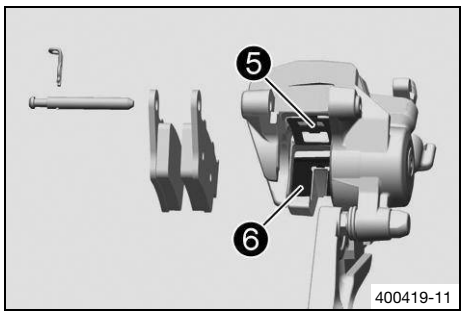

– Check that spring steel clip ❺ in the brake caliper and brake pad guide plate ❻ in the brake caliper support are properly seated.
– Insert the new brake linings, insert the pin, and mount the cotter pins.

Always replace brake pads in sets.

– Actuate the brake pedal repeatedly until the brake pads are in contact with the brake disc and a pressure point is achieved.
– Adjust the brake fluid level to the MAX marking.

Brake fluid DOT 5.1 (p. 180)

– Mount the screw cover with washer and the membrane.

Immediately clean up any brake fluid that has overflowed or spilled using water.

14.1 Removing the front wheel

Preparatory work

– Raise the motorcycle with a lift stand. (p. 90)

Main work

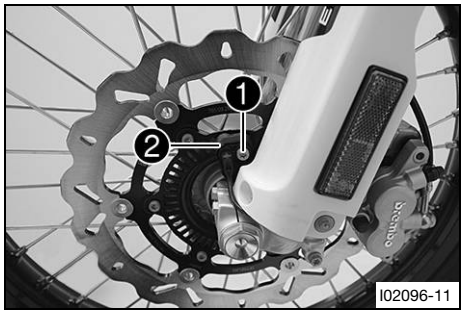

– Remove screw ❶ and pull wheel speed sensor ❷ out of the hole.

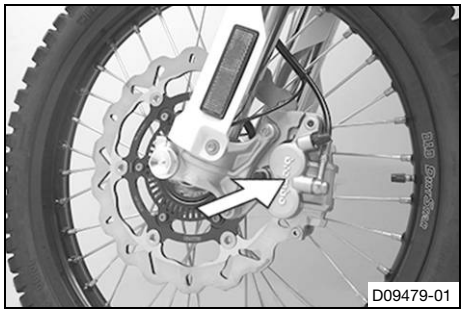

– Manually press the brake caliper toward the brake disc to push back the brake pistons.

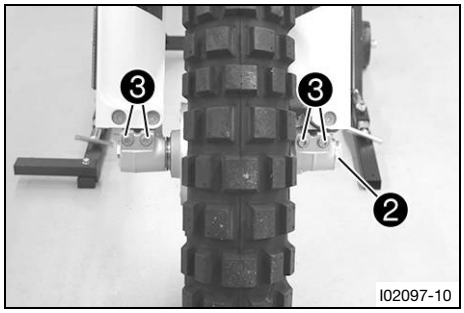

– Loosen screw ❷ by four turns.
– Loosen screws ❸.
– Press on screw ❷ to push the wheel spindle out of the fork shoe.
– Remove screw ❷.

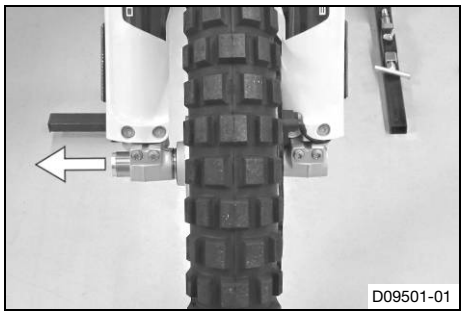

WARNING

Danger of accidents Damaged brake discs reduce the braking action.

– Always lay the wheel down in such a way that the brake disc is not damaged.

– Hold front wheel and remove wheel spindle. Take the front wheel out of the fork.

Do not actuate the hand brake lever when the front wheel is removed.

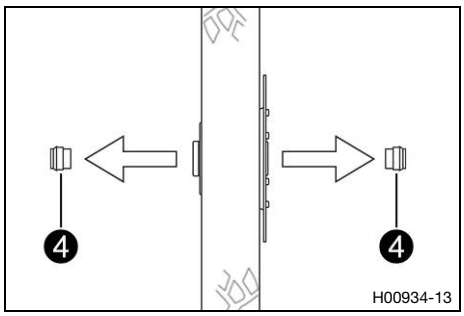

– Remove spacers ❹.

14.2 Installing the front wheel

WARNING
Danger of accidents Oil, grease or wax on the brake discs reduces the brake action.
– Always keep the brake discs free of oil, fat and wax.
– Clean the brake discs with brake cleaner when necessary.

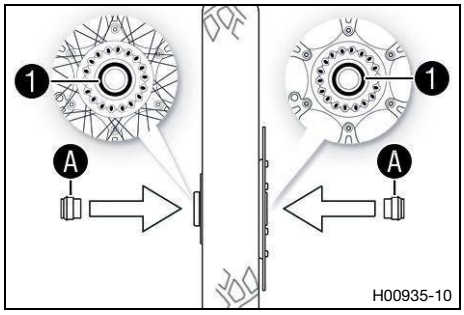

– Check the wheel bearing for damage and wear.
  » If the wheel bearings are damaged or worn:
    – Change the front wheel bearing.
– Clean and grease radial shaft seal ❶ and contact surfaces Ⓐ on the spacers.

Long-life grease (p. 179)

– Insert spacers.

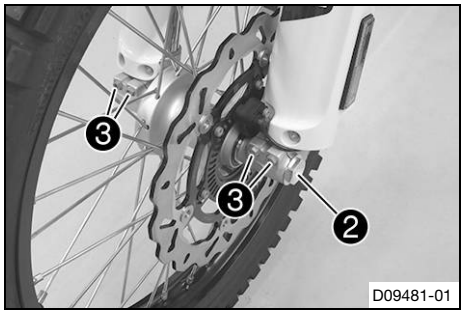

– Clean and lightly grease the wheel spindle.

Long-life grease (p. 179)

– Jack up the front wheel into the fork, position it, and insert the wheel spindle.
  ✓ The brake linings are correctly positioned.
– Mount and tighten screw ❷.

Screw, wheel spindle, front	
M24×1.5	45 Nm (33.2 ft·lb$_f$)

– Operate the hand brake lever several times until the brake pads are in contact with the brake disc.
– Remove the motorcycle from the lift stand. (p. 91)
– Operate the front brake and compress the fork a few times firmly.
  ✓ The fork legs straighten.
– Tighten screws ❸.

Screw, fork shoe	
M8	15 Nm (11.1 ft·lb$_f$)

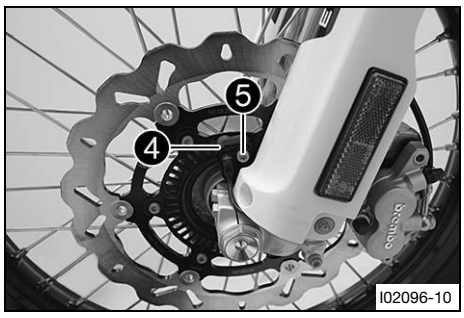

– Position wheel speed sensor ❹ in the hole.
– Mount and tighten screw ❺.

Screw, wheel speed sensor	
M6	6 Nm (4.4 ft·lb$_f$)

14.3 Removing the rear wheel

Preparatory work

– Raise the motorcycle with a lift stand. (p. 90)

Main work

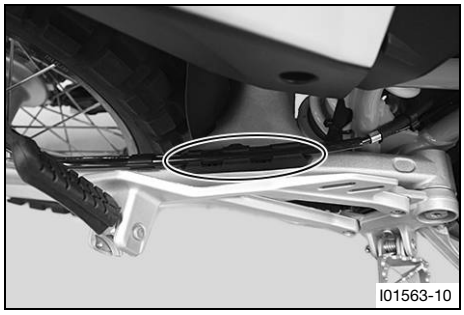

– Take the brake line out of the guide.

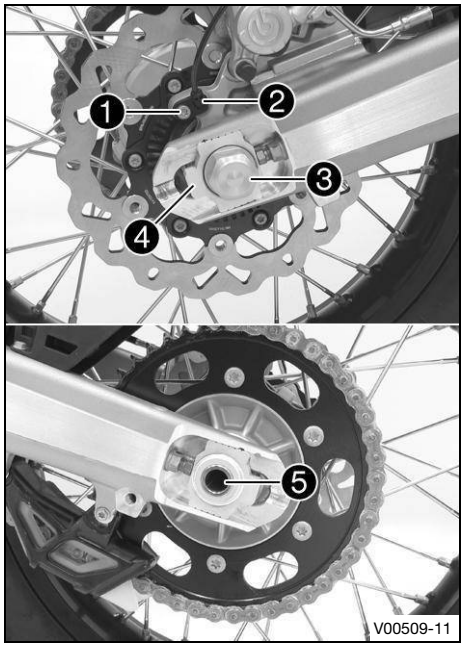

– Manually press the brake caliper toward the brake disc to push back the brake pistons.
– Remove screw ❶ and pull wheel speed sensor ❷ out of the hole.
– Remove nut ❸. Remove chain tension adjuster ❹.
– Pull out wheel spindle ❺ to the point where the chain adjuster is no longer in contact with the adjusting screw.
– Push the rear wheel forward as far as possible and take the chain off the rear sprocket.

> Protect the components against damage by covering them.

– Hold the rear wheel and remove wheel spindle.

> **WARNING**
> **Danger of accidents** Damaged brake discs reduce the braking action.
> – Always lay the wheel down in such a way that the brake disc is not damaged.

– Take the rear wheel out of the swingarm.

> Do not operate the foot brake when the rear wheel is removed.

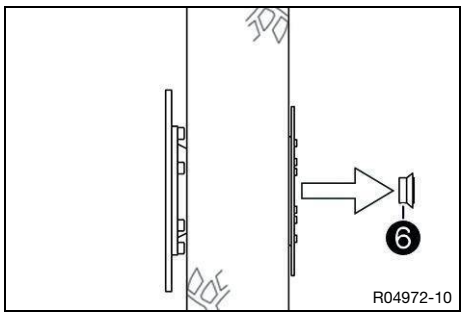

– Remove spacer ❻.

14.4 Installing the rear wheel

WARNING
Danger of accidents Oil, grease or wax on the brake discs reduces the brake action.
– Always keep the brake discs free of oil, fat and wax.
– Clean the brake discs with brake cleaner when necessary.

WARNING
Danger of accidents There is no braking effect to start with at the rear brake after installing the rear wheel.
– Actuate the foot brake several times before going on a ride until you can feel a firm pressure point.

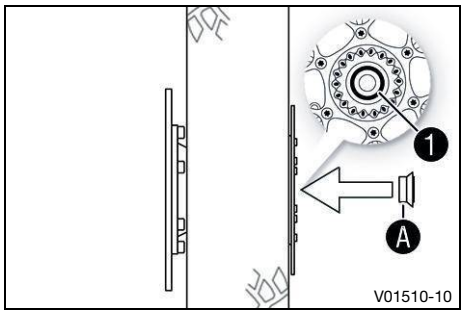

Main work
– Check the rear hub damping rubber pieces. (p. 124)
– Check the wheel bearing for damage and wear.
  » If the wheel bearings are damaged or worn:
    – Change the rear wheel bearing.
– Clean and grease shaft seal ring ❶ and contact surface Ⓐ of the spacer.

Long-life grease (p. 179)

– Insert a spacer.

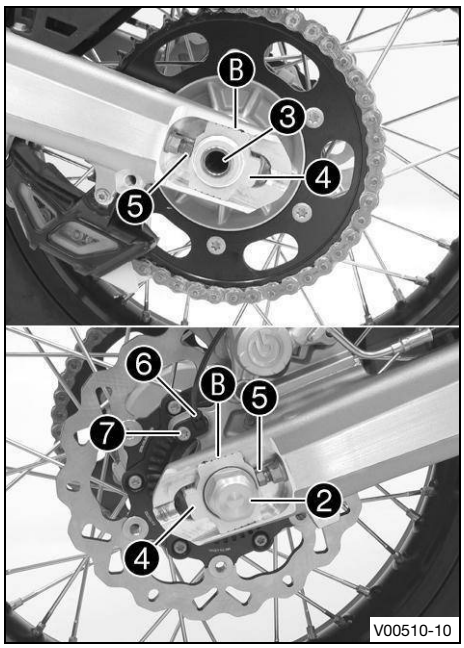

– Clean and grease the thread of the wheel spindle and nut ❷.

Long-life grease (p. 179)

– Clean and lightly grease the wheel spindle.

Long-life grease (p. 179)

– Mount the damping rubbers and rear sprocket carrier in the rear wheel.
– Position the rear wheel.
  ✓ The brake pads are positioned correctly.
– Push the rear wheel forward as far as possible and lay the chain on the rear sprocket.
– Mount wheel spindle ❸ and chain adjuster ❹. Mount nut ❷ but do not tighten yet.

Nut, wheel spindle, rear	
M25×1.5	90 Nm (66.4 ft·lb$_f$)

– Make sure that chain tension adjusters ❹ are fitted correctly on adjusting screws ❺.

In order for the rear wheel to be correctly aligned, the markings on the left and right chain adjusters must be in the same position relative to reference markings Ⓑ.
Mount left and right chain adjusters ❹ in the same position.

– Tighten nut ❷.

Nut, wheel spindle, rear	
M25×1.5	90 Nm (66.4 ft·lb$_f$)

– Position wheel speed sensor ❻ in the hole.
– Mount and tighten screw ❼.

Screw, wheel speed sensor	
M6	6 Nm (4.4 ft·lb$_f$)

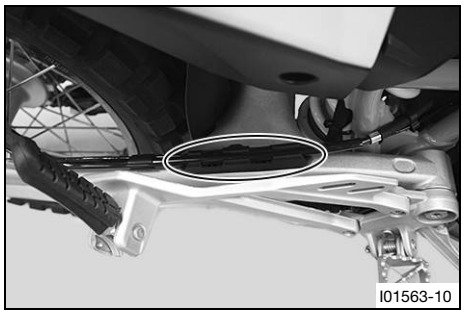

– Position the brake line in the guide.
– Actuate the brake pedal repeatedly until the brake pads are in contact with the brake disc and a pressure point is achieved.

Reworking

– Check the chain tension. (p. 100)
– Remove the motorcycle from the lift stand. (p. 91)

14.5 Checking the rear hub damping rubber pieces

Note
The engine power is transmitted from the rear sprocket to the rear wheel via the 6 damping rubber pieces. They eventually wear out during operation. If the damping rubber pieces are not changed in time, the rear sprocket carrier and the rear hub will be damaged.

Preparatory work

– Raise the motorcycle with a lift stand. (p. 90)
– Remove the rear wheel. (p. 121)

Main work

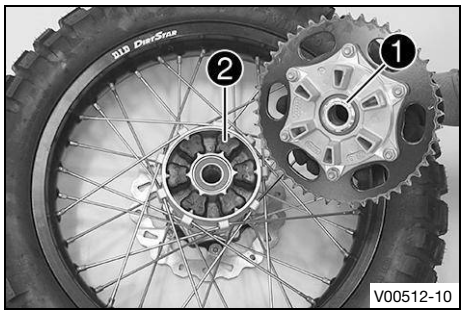

– Check bearing ❶.
  » If the bearing is damaged or worn:
    – Change the bearing of the rear sprocket carrier.
– Check damping rubber pieces ❷ of the rear hub for damage and wear.
  » If the damping rubber pieces of the rear hub are damaged or worn:
    – Change all the damping rubber pieces of the rear hub.

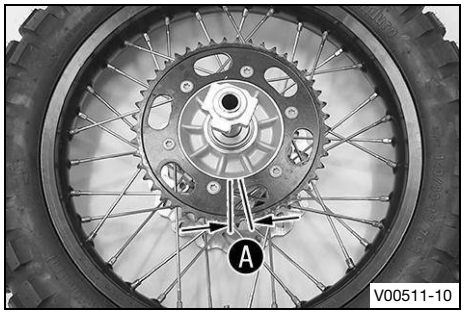

– Lay the rear wheel on a workbench with the rear sprocket facing upwards and insert the wheel spindle in the hub.
– To check play Ⓐ, hold the rear wheel tight and try to turn the rear sprocket with your hand.

Play of damping rubber pieces on rear wheel	≤ 5 mm (≤ 0.20 in)

Note
Measure the play on the outside of the rear sprocket.

» If clearance Ⓐ is larger than the specified value:
  – Change all the damping rubber pieces of the rear hub.

Reworking

– Install the rear wheel. (p. 122)
– Check the chain tension. (p. 100)
– Remove the motorcycle from the lift stand. (p. 91)

14.6 Checking the tire condition

WARNING
Danger of accidents If a tire bursts while riding, the vehicle becomes uncontrollable.
– Ensure that damaged or worn tires are replaced immediately.

WARNING

Danger of accidents Non-approved or non-recommended tyres and wheels impact the handling characteristic.

– Only use tires and wheels approved and recommended by the vehicle manufacturer with the corresponding speed rating.

WARNING

Danger of accidents New tires have reduced road grip.

The contact surface on new tires is not yet roughened.

– Run in new tires with moderate riding and only gradually increase the lean angle.

Run-in distance	200 km (124.3 mi)

WARNING

Danger of accidents Different tire profiles on the front and rear wheels can make it more difficult to control the vehicle.

– Make sure that only tires of the same tread type are mounted to the front and rear wheel.

Note

The type, condition, and pressure of the tires all have a major impact on the handling of the motorcycle. Worn tires have a negative effect on handling characteristics, especially on wet surfaces.

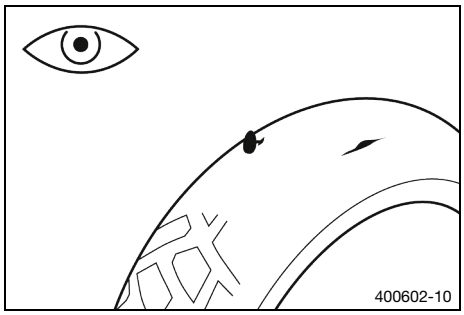

– Check the front and rear tires for cuts, embedded objects, and other damage.
  » If the tires have cuts, run-in objects, or other damage:
    – Change the tires.
– Check the tread depth.

Minimum tread depth	≥ 2 mm (≥ 0.08 in)

Note

Observe the minimum tread depth required by national law.

» If the tread depth is less than the minimum tread depth:
  – Change the tires.

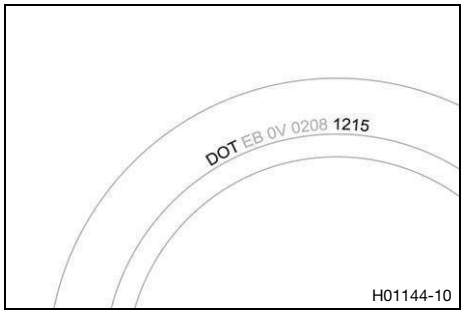

– Check the tire age.

Note

The tire date of manufacture is usually contained in the tire label and is indicated by the last four digits of the **DOT** number. The first two digits indicate the week of manufacture and the last two digits the year of manufacture.

Husqvarna recommends that the tires be changed after 5 years at the latest, regardless of the actual state of wear.

» If the tires are older than five years:
  – Change the tires.

14.7 Checking the tire pressure

Note
Low tire pressure leads to abnormal wear and the tire overheating.
Correct tire pressure ensures optimal riding comfort and maximum tire service life.

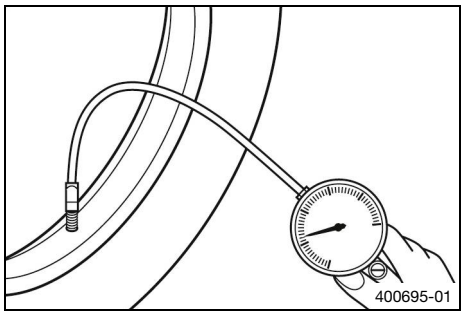

– Remove the protection cap.
– Check the tire pressure when the tires are cold.

Tire pressure, offroad, solo	
front	1.5 bar (21.8 psi)
rear	1.5 bar (21.8 psi)

Tire pressure, road, solo	
front	1.8 bar (26.1 psi)
rear	1.8 bar (26.1 psi)

Tire pressure with passenger / full payload	
front	2.2 bar (31.9 psi)
rear	2.2 bar (31.9 psi)

» If the tire pressure does not meet specifications:
  – Correct tire pressure.
– Mount the protection cap.

14.8 Checking the spoke tension

WARNING
Danger of accidents Incorrectly tensioned spokes impair the handling characteristic and can result in secondary damage.
If the spokes are too tight, they can break due to being overloaded.
Loose spokes can cause lateral or radial run-out in the wheel and other spokes will loosen as a result.
– Check the spoke tension regularly, especially on a new vehicle.

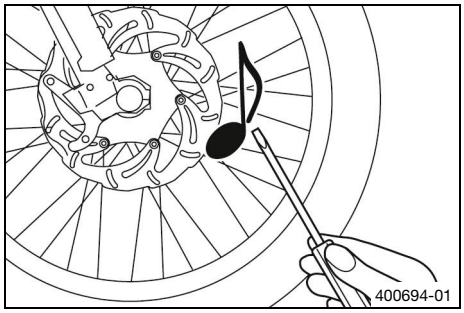

– Briefly tap each spoke with a screwdriver.

You should hear a high-pitched sound.

Note

The frequency of the sound depends on the spoke length and spoke diameter.

If spokes of the same length and diameter vibrate with a different tone, this is an indication that the spoke tensions differ.

» If the spoke tension differs:
  – Correct the spoke tension.

14.9 Using tire repair spray

WARNING

Danger of accidents Incorrect use of tire repair spray will result in the repaired tire losing pressure.

Tire repair spray cannot be used for all types of damage.

– Observe the instructions and specifications of the manufacturer of the tire repair spray.
– After repairing a tire with tire repair spray, ride slowly and carefully.
– Ride no further than the nearest authorized dealer and have the tire replaced.

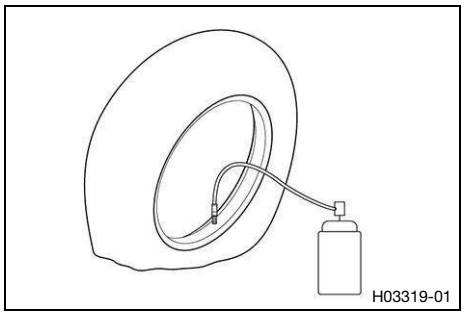

Tire repair spray should only be used in an emergency.

Transporting the broken-down vehicle to the nearest authorized dealer is recommended instead of repairing it.

15.1 Removing the 12 V battery

WARNING

Risk of injury Battery acid and battery gases cause chemical burns.

- Keep 12-V batteries out of the reach of children.
- Wear suitable protective clothing and safety glasses.
- Avoid contact with battery acid and battery gases.
- Keep sparks or open flames away from the 12 V battery.
- Only charge 12 V batteries in well-ventilated rooms.
- Rinse the affected area immediately with plenty of water in the event of contact with skin.
- Rinse eyes with water for at least 15 minutes and consult a doctor immediately if battery acid and battery gases get into the eyes.

Preparatory work

- Open the fuel tank cap. (p. 28)
- Remove the seat. (p. 93)

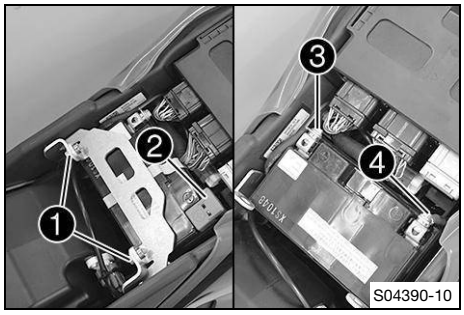

Main work

- Remove screws ❶.
- Push the retaining bracket toward the rear and remove it.
- Take off positive terminal cover ❷.
- Disconnect negative cable ❸ from the 12-V battery.
- Disconnect positive cable ❹ from the 12-V battery.
- Lift out the 12-V battery.

Never operate the motorcycle with a discharged 12-V battery or without a 12-V battery.

Note

In both cases, electrical components and safety devices can be damaged. The vehicle will therefore no longer be roadworthy.

15.2 Installing the 12 V battery

Main work

- Insert the 12-V battery into the battery compartment with the terminals facing to the rear.

12 V battery (YTZ10S) (p. 181)

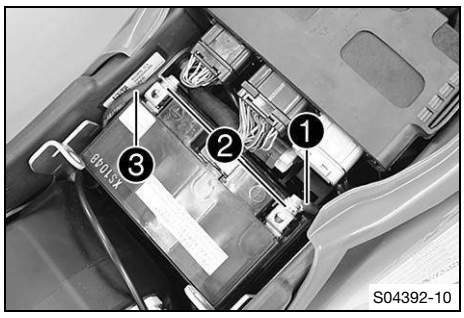

– Position positive cable ❶ with washer ❷.
– Position negative cable ❸ with washer ❷.
– Mount and tighten the screws.

Screw, battery terminal	
M6	4.5 Nm (3.32 ft·lb$_f$)

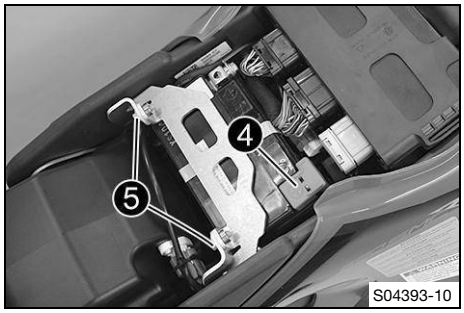

– Position positive terminal cover ❹.
– Position retaining bracket and mount and tighten screws ❺.

Remaining screws on chassis	
M6	10 Nm (7.4 ft·lb$_f$)

Reworking

– Mount the seat. (p. 94)
– Set time and date. (p. 64)

15.3 Charging the 12 V battery

WARNING

Risk of injury Battery acid and battery gases cause chemical burns.

– Keep 12-V batteries out of the reach of children.
– Wear suitable protective clothing and safety glasses.
– Avoid contact with battery acid and battery gases.
– Keep sparks or open flames away from the 12 V battery.
– Only charge 12 V batteries in well-ventilated rooms.
– Rinse the affected area immediately with plenty of water in the event of contact with skin.
– Rinse eyes with water for at least 15 minutes and consult a doctor immediately if battery acid and battery gases get into the eyes.

NOTE

Environmental hazard 12-V batteries contain environmentally-hazardous materials.

– Do not dispose of 12-V batteries as household waste.
– Dispose of 12-V batteries at a collection point for used batteries.

NOTE

Environmental hazard Hazardous substances cause environmental damage.

– Dispose of oils, grease, filters, fuel, cleaning agents, brake fluid, etc. correctly and in accordance with the applicable regulations.

Note

Even when there is no load on the 12 V battery, it discharges steadily each day.

The state of charge and the method of charging are very important for the service life of the 12 V battery.

Rapid recharging with a high charging current shortens the service life of the battery.

If the charging current, charging voltage and charging time are exceeded, electrolyte escapes through the safety valves. This reduces the capacity of the 12-V battery.

If the 12 V battery is left in a discharged state for an extended period, it will become deeply discharged and sulfating occurs, thus destroying the battery.

The 12-V battery is maintenance-free, i.e. the acid level does not have to be checked.

Preparatory work

– Open the fuel tank cap. (p. 28)
– Remove the seat. (p. 93)
– Remove the 12 V battery. (p. 128)

Main work

S06148-01

– Connect a charger to the 12 V battery. Connect the battery charger to the mains connection.

Charge the 12-V battery to a maximum of 10 % of the capacity specified on the battery housing.

EU battery charger **TecMATE Optimate PRO** (A61029974044)
USA/CA battery charger **TecMATE Optimate PRO** (A61029974144)
Battery charger **TecMATE Optimate PRO** UK (A61029974244)

Note

After charging, the battery charger can remain on the vehicle, ensuring that the battery voltage is maintained during the maintenance charging cycle.

Note

It is impossible to overcharge the 12-V battery using this battery charger.

Note

This battery charger is not suitable for lithium-ion batteries.

– Disconnect the battery charger from the mains connection and the 12-V battery after charging.

The charging current, charging voltage, and charging time must not be exceeded.	
Recharge the 12 V battery regularly when the motorcycle is not being used.	3 months
If the 12 V battery is depleted from starting the vehicle repeatedly, the battery must be charged immediately.	

Reworking

– Install the 12 V battery. (p. 128)
– Mount the seat. (p. 94)
– Set time and date. (p. 64)

15.4 Changing the main fuse

WARNING

Fire hazard Incorrect fuses overload the electrical system.

– Use only fuses with the prescribed amperage.
– Do not bypass or repair fuses.

Note

The main fuse protects all electrical power loads of the vehicle. It is in the housing of the starter relay next to the 12-V battery.

Preparatory work

– Open the fuel tank cap. (p. 28)
– Remove the seat. (p. 93)

Main work

– Pull off engine control unit ❶ from the holder and hang to the side.

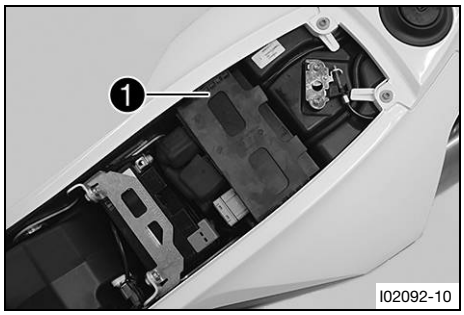

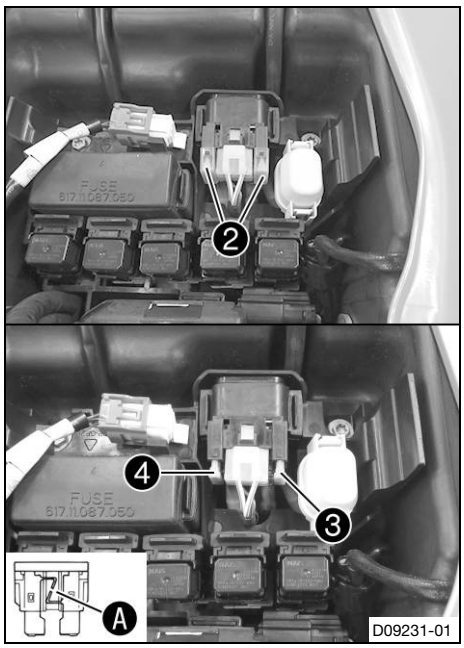

– Remove protection caps ❷.
– Remove a defective main fuse ❸ with needle nose pliers.

Note
A faulty fuse has a burned-out fuse wire Ⓐ.
A spare fuse ❹ is located in the starter relay.

– Insert the main fuse.

Fuse (58011109130) (p. 182)

Note
Insert a new spare fuse into the starter relay to have it available when needed.

– Check that the electrical equipment is functioning properly.
– Mount the protection caps.
– Position the engine control unit.

Reworking
– Mount the seat. (p. 94)
– Set time and date. (p. 64)

15.5 Changing the ABS fuses

WARNING
Fire hazard Incorrect fuses overload the electrical system.
– Use only fuses with the prescribed amperage.
– Do not bypass or repair fuses.

Note
Two fuses for the ABS are located under the seat. These fuses protect the return pump and the hydraulic unit of the ABS. The third fuse, which protects the ABS control unit, is located in the fuse box.

Preparatory work
– Open the fuel tank cap. (p. 28)
– Remove the seat. (p. 93)
– Pull off the engine control unit from the holder and hang to the side.

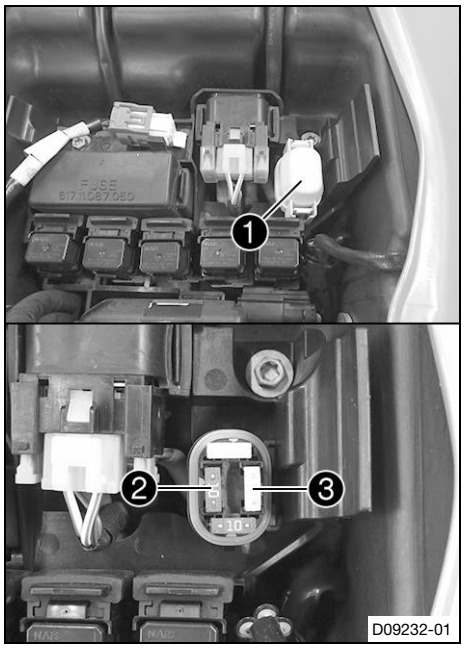

Main work

Changing the fuse of the ABS hydraulic unit

– Remove protection cap ❶.
– Remove the fuse ❷ of the ABS hydraulic unit.
– Insert a new fuse.

Fuse (75011088010) (p. 182)

– Mount the protection cap.

Changing the fuse of the ABS return pump

– Remove protection cap ❶.
– Remove fuse ❸ of the ABS return pump.
– Insert a new fuse.

Fuse (75011088025) (p. 182)

– Mount the protection cap.

Reworking

– Position the engine control unit.
– Mount the seat. (p. 94)

15.6 Changing the fuses of individual electrical power consumers

Note
The fuse box containing the fuses of individual electrical power consumers is located under the seat.

Preparatory work

– Open the fuel tank cap. (p. 28)
– Remove the seat. (p. 93)
– Pull off the engine control unit from the holder and hang to the side.

Main work

– Open fuse box cover ❶.

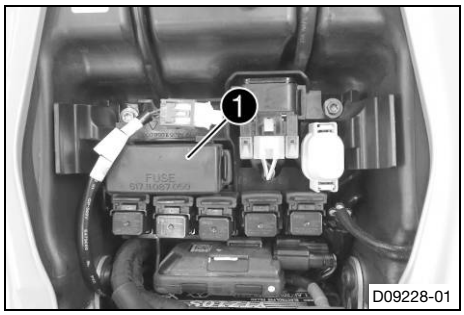

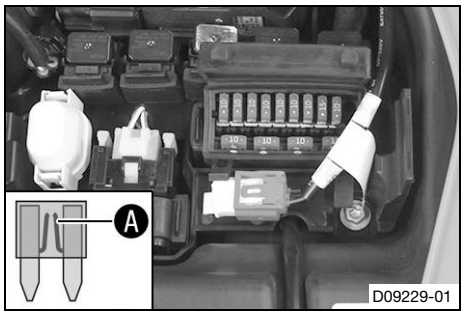

– Remove the faulty fuse.

Fuse **1** - 10 A - ignition, combination instrument, clock, engine control unit
Fuse **2** - 10A - ignition, combination instrument, engine control unit
Fuse **3** - 10 A - fuel pump
Fuse **4** - 10 A - radiator fan
Fuse **5** - 10 A - horn, brake light, turn signal
Fuse **6** – 15 A - high beam, low beam, position light, tail light, license plate lighting
Fuse **7** - 10 A - for auxiliary equipment ACC 1 (permanent positive)
Fuse **8** - 10 A - for auxiliary equipment ACC 2 (ignition positive), USB-C charging port
Fuse **9** - 10 A - ABS
Fuse **10** - not assigned
Fuse **SPARE** - 10 A/15 A - spare fuses

Note
A faulty fuse has a burned-out fuse wire Ⓐ.

WARNING
Fire hazard Incorrect fuses overload the electrical system.
– Use only fuses with the prescribed amperage.
– Do not bypass or repair fuses.

– Insert the spare fuse with the correct rating.

Fuse (75011088010) (p. 182)
Fuse (75011088015) (p. 182)

Tip
Put a spare fuse in the fuse box so that it is available if needed.

– Check the function of the electrical power consumer.
– Close the fuse box cover.

Reworking

– Position the engine control unit.
– Mount the seat. (p. 94)

15.7 Removing the headlight with the headlight mask

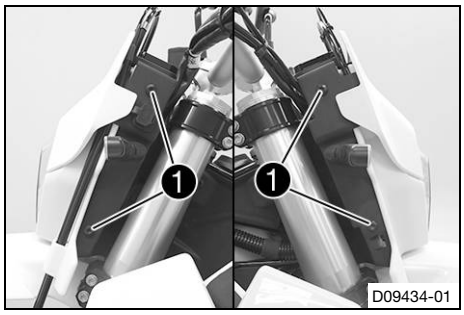

– Cover the fender with a cloth.
– Remove screws ❶.
– Tip the headlight mask forward.

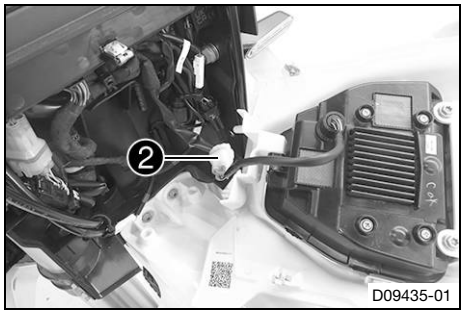

– Disconnect plug-in connector ❷ of the headlight.
– Take off the headlight mask with headlight.

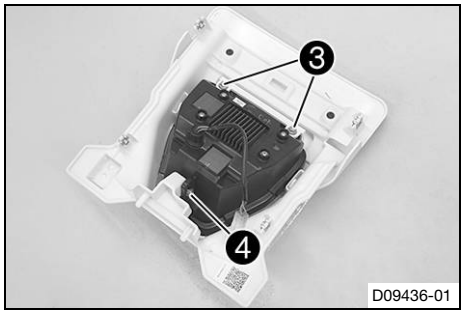

– Remove screws ❸.
– Remove screw ❹.
– Remove the headlight from the headlight mask.

15.8 Installing the headlight with the headlight mask

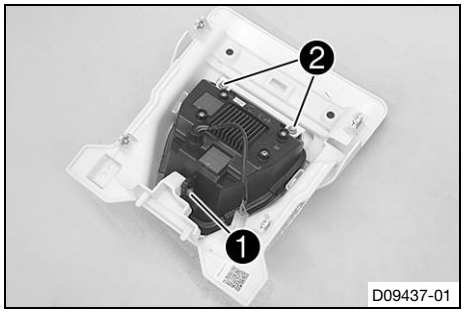

Main work

– Position the headlight in the headlight mask.
– Mount and tighten screw ❶.
– Mount and tighten screws ❷.

Screw, headlight mask	
M5	2 Nm (1.5 ft·lb$_f$)

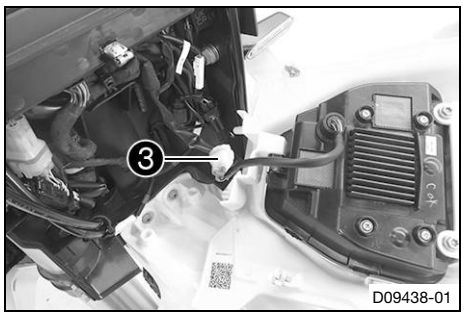

– Join plug-in connector ❸ of the headlight.
– Check that the lighting is functioning properly.

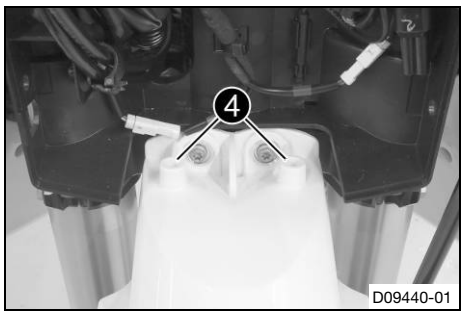

– Remove the cloth from the fender and position the headlight mask.

Make sure the brake line is laid correctly.

✓ Headlight mask engages in the fender on the bushings ❹.

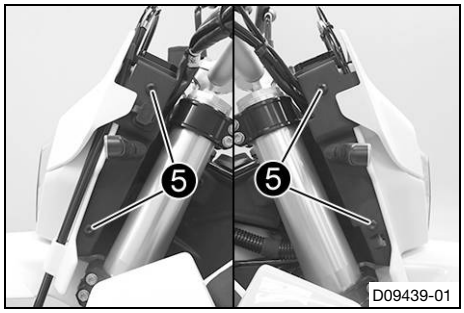

– Mount and tighten screws ❺.

Screw, headlight mask	
M5	2 Nm (1.5 ft·lb$_f$)

Reworking

– Check the headlight setting. (p. 136)

15.9 Checking the headlight setting

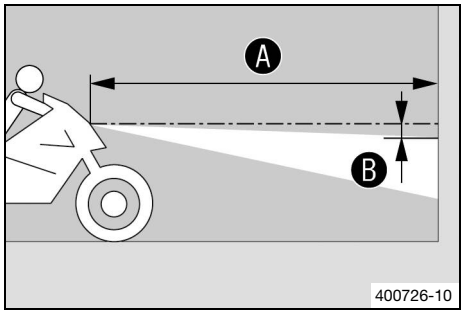

– Park the vehicle on a horizontal surface in front of a light-colored wall and make a mark at the height of the center of the low beam headlight.
– Make another mark at a distance Ⓑ under the first marking.

Distance Ⓑ	5 cm (2.0 in)

– Position the vehicle vertically at a distance Ⓐ away from the wall.

Distance Ⓐ	5 m (16 ft – 5 in)

– Get on the motorcycle, together with any luggage or passenger.
– Switch on the low beam.
– Check the headlight setting.

The light-dark boundary must be exactly on the lower marking when the motorcycle is ready to be operated with the rider mounted along with any luggage and a passenger if applicable.

» If the boundary between light and dark does not meet specifications:
  – Adjust headlight range. (p. 137)

15.10 Adjusting the headlight range

Preparatory work

– Check the headlight setting. (p. 136)

Main work

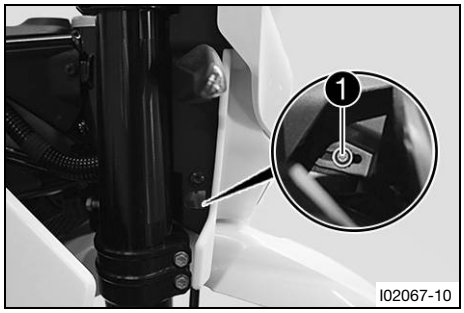

– Loosen screw ❶.
– Adjust the headlight range by pivoting the headlight.

The boundary between light and dark must be exactly on the lower mark for a motorcycle with rider (instructions on how to apply the mark: Checking the headlight setting).

Note
If you have a load, you may have to correct the headlight range.

– Tighten screw ❶.

15.11 USB socket

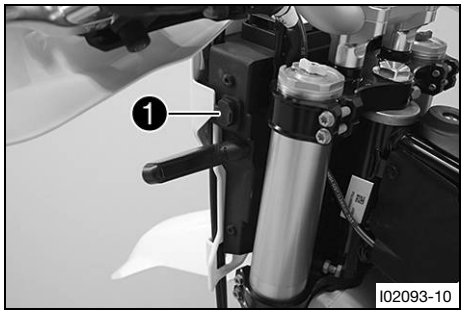

A USB-C socket ❶ for supplying power to external devices is located on the left side of the headlight mask.

The USB-C socket is switched on with the ignition.

USB-C socket	
Voltage	5 V
Maximum current consumption	2.1 A

15.12 ACC1 and ACC2

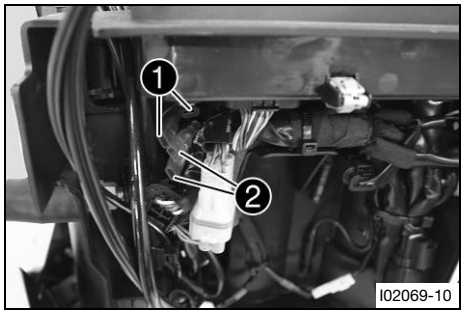

Installation location

- The power supplies ACC1 ❶ and ACC2 ❷ are located behind the headlight mask.

15.13 Diagnostic connector

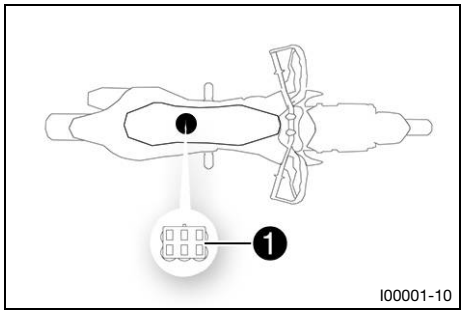

Diagnostics connector ❶ is located under the engine control unit.

16.1 Cooling system

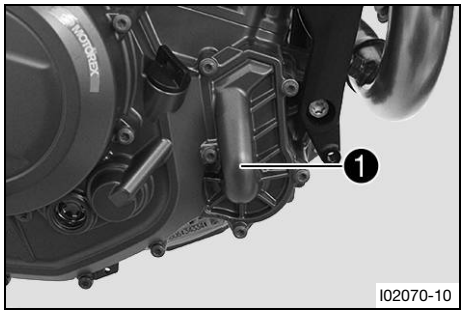

Water pump ❶ in the engine circulates the coolant.
The pressure resulting from the warming of the cooling system is regulated by a valve in radiator cap ❷. Heat expansion causes excess coolant to flow into compensating tank ❸. When the temperature falls, this surplus coolant is sucked back into the cooling system. This ensures that operating the vehicle at the specified coolant temperature will not result in a risk of malfunctions.

125 °C (257.0 °F)

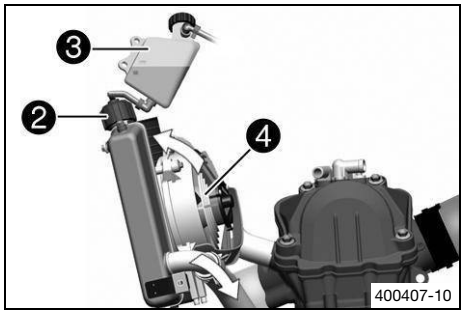

The coolant is cooled by the air stream and radiator fan ❹, which is activated depending on the temperature.
The lower the vehicle speed, the lower the cooling effect. Dirty cooling fins also reduce the cooling effect.

16.2 Checking the frost protection and coolant level

WARNING
Health hazard Coolant is harmful to health.
- Keep coolant out of the reach of children.
- Do not allow coolant to come into contact with skin, eyes, or clothing.
- Consult a doctor immediately if coolant has been ingested.
- Rinse the affected area immediately with plenty of water in the event of contact with skin.
- Rinse eyes thoroughly with water and consult a doctor immediately if coolant comes into contact with eyes.
- If coolant spills on to your clothing, change the clothing.
- Store coolant properly in a suitable container and keep out of the reach of children.

WARNING
Danger of scalding The coolant heats up and is under high pressure when the vehicle is operated.
- Do not open the radiator, the radiator hoses, or other cooling system components if the engine or the cooling system are at operating temperature.
- Allow the cooling system and the engine to cool down before you open the radiator, the radiator hoses, or other components of the cooling system.
- In the event of scalding, rinse the area affected immediately with lukewarm water.

Condition: The engine is cold

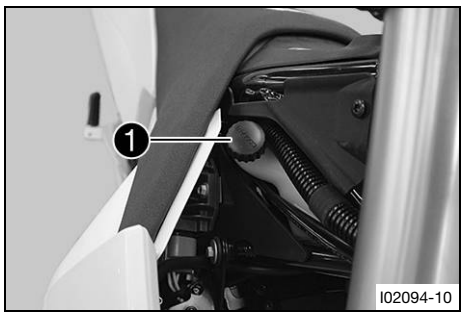

– Stand the motorcycle on a level surface using the side stand.
– Remove the cover of compensating tank ❶.
– Check the frost protection in the coolant.

−45 °C … −25 °C (−49.0 °F … −13.0 °F)

» If the frost protection in the coolant does not match the specified value:
  – Correct the frost protection in the coolant.
– Check the coolant level in the compensating tank.

The coolant level must be between the two markings.

» If the coolant level does not meet the specifications:
  – Correct the coolant level.

coolant	
Coolant (p. 180) Antifreeze protection to at least: −25 °C (−13.0 °F)	1.20 l (0.317 liq. gal_{US})

– Mount cover of the compensating tank.

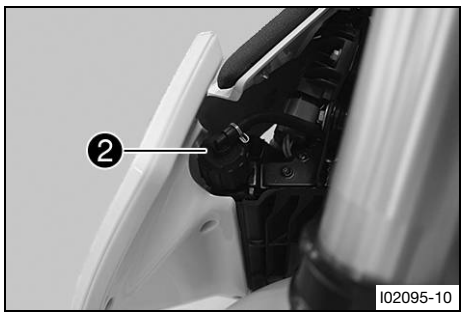

– Remove radiator cap ❷.
– Check the frost protection in the coolant.

−45 °C … −25 °C (−49.0 °F … −13.0 °F)

» If the frost protection in the coolant does not match the specified value:
  – Correct the frost protection in the coolant.
– Check the coolant level in the radiator.

The radiator must be filled completely.

» If the coolant level does not meet the specifications:
  – Check the coolant level and the reason for the loss.

coolant	
Coolant (p. 180) Antifreeze protection to at least: −25 °C (−13.0 °F)	1.20 l (0.317 liq. gal_{US})

– Mount the radiator cap.

16.3 Checking the coolant level

WARNING
Health hazard Coolant is harmful to health.
– Keep coolant out of the reach of children.
– Do not allow coolant to come into contact with skin, eyes, or clothing.
– Consult a doctor immediately if coolant has been ingested.
– Rinse the affected area immediately with plenty of water in the event of contact with skin.
– Rinse eyes thoroughly with water and consult a doctor immediately if coolant comes into contact with eyes.
– If coolant spills on to your clothing, change the clothing.
– Store coolant properly in a suitable container and keep out of the reach of children.

WARNING

Danger of scalding The coolant heats up and is under high pressure when the vehicle is operated.

- Do not open the radiator, the radiator hoses, or other cooling system components if the engine or the cooling system are at operating temperature.
- Allow the cooling system and the engine to cool down before you open the radiator, the radiator hoses, or other components of the cooling system.
- In the event of scalding, rinse the area affected immediately with lukewarm water.

Condition: The engine is cold

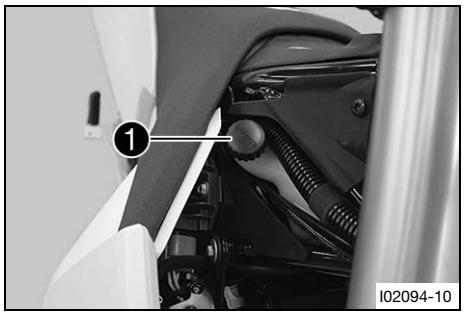

- Stand the motorcycle on a level surface using the side stand.
- Check the coolant level in compensating tank ❶.

The coolant level must be between the two markings.

» If the coolant level does not meet the specifications:
  - Correct the coolant level.

coolant	
Coolant (p. 180) Antifreeze protection to at least: −25 °C (−13.0 °F)	1.20 l (0.317 liq. gal_{US})

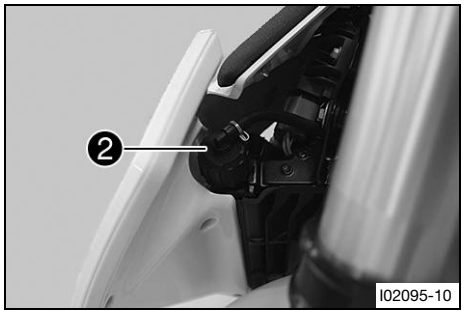

- Remove radiator cap ❷ and check the coolant level in the radiator.

The radiator must be filled completely.

» If the coolant level does not meet the specifications:
  - Check the coolant level and the reason for the loss.

coolant	
Coolant (p. 180) Antifreeze protection to at least: −25 °C (−13.0 °F)	1.20 l (0.317 liq. gal_{US})

- Mount the radiator cap.

16.4 Draining the coolant

WARNING

Health hazard Coolant is harmful to health.

- Keep coolant out of the reach of children.
- Do not allow coolant to come into contact with skin, eyes, or clothing.
- Consult a doctor immediately if coolant has been ingested.
- Rinse the affected area immediately with plenty of water in the event of contact with skin.
- Rinse eyes thoroughly with water and consult a doctor immediately if coolant comes into contact with eyes.
- If coolant spills on to your clothing, change the clothing.
- Store coolant properly in a suitable container and keep out of the reach of children.

WARNING

Danger of scalding The coolant heats up and is under high pressure when the vehicle is operated.

- Do not open the radiator, the radiator hoses, or other cooling system components if the engine or the cooling system are at operating temperature.
- Allow the cooling system and the engine to cool down before you open the radiator, the radiator hoses, or other components of the cooling system.
- In the event of scalding, rinse the area affected immediately with lukewarm water.

Condition: The engine is cold

Preparatory work

- Remove the skid plate. (p. 106)

Main work

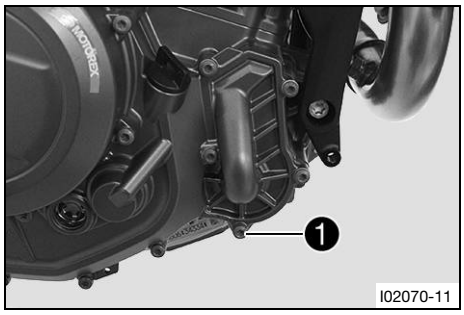

- Stand the motorcycle upright.
- Position an appropriate container under the engine.
- Remove screw 1 with the sealing ring. Take off the radiator cap.
- Completely drain the coolant.
- Mount screw 1 with the new sealing ring and tighten.

Screw, engine case	
M6×30	10 Nm (7.4 ft·lb$_f$)

- Mount the radiator cap.

16.5 Filling/bleeding the cooling system

WARNING

Health hazard Coolant is harmful to health.

- Keep coolant out of the reach of children.
- Do not allow coolant to come into contact with skin, eyes, or clothing.
- Consult a doctor immediately if coolant has been ingested.
- Rinse the affected area immediately with plenty of water in the event of contact with skin.
- Rinse eyes thoroughly with water and consult a doctor immediately if coolant comes into contact with eyes.
- If coolant spills on to your clothing, change the clothing.
- Store coolant properly in a suitable container and keep out of the reach of children.

WARNING

Danger of scalding The coolant heats up and is under high pressure when the vehicle is operated.

- Do not open the radiator, the radiator hoses, or other cooling system components if the engine or the cooling system are at operating temperature.
- Allow the cooling system and the engine to cool down before you open the radiator, the radiator hoses, or other components of the cooling system.
- In the event of scalding, rinse the area affected immediately with lukewarm water.

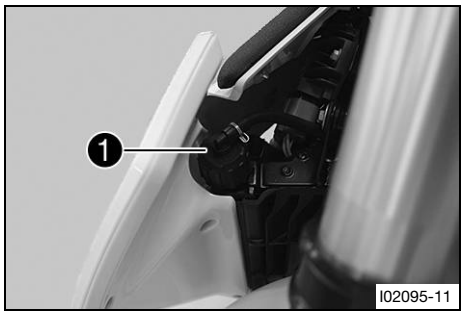

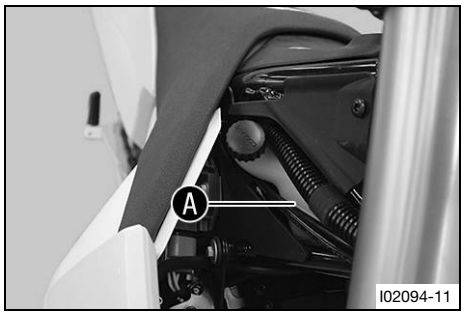

Main work

– Stand the motorcycle on a level surface using the side stand.
– Remove radiator cap ❶.
– Completely fill the radiator with coolant.

coolant	
Coolant (p. 180) Antifreeze protection to at least: −25 °C (−13.0 °F)	1.20 l (0.317 liq. gal_{US})

– Mount radiator cap ❶.

– Remove the cover of the compensating tank.
– Add coolant up to the marking Ⓐ.
– Mount cover of the compensating tank.

DANGER
Danger of poisoning Exhaust gases are toxic and inhaling them may result in unconsciousness and death.
– Always ensure that there is sufficient ventilation when running the engine.
– Use suitable exhaust extraction when starting or running the engine in an enclosed space.

– Start the engine and allow it to warm up.
– Stop the engine and allow it to cool down.
– Check the coolant level. (p. 140)

Reworking

– Install the skid plate. (p. 106)

16.6 Changing the coolant

WARNING
Health hazard Coolant is harmful to health.
– Keep coolant out of the reach of children.
– Do not allow coolant to come into contact with skin, eyes, or clothing.
– Consult a doctor immediately if coolant has been ingested.
– Rinse the affected area immediately with plenty of water in the event of contact with skin.
– Rinse eyes thoroughly with water and consult a doctor immediately if coolant comes into contact with eyes.
– If coolant spills on to your clothing, change the clothing.
– Store coolant properly in a suitable container and keep out of the reach of children.

WARNING
Danger of scalding The coolant heats up and is under high pressure when the vehicle is operated.
– Do not open the radiator, the radiator hoses, or other cooling system components if the engine or the cooling system are at operating temperature.
– Allow the cooling system and the engine to cool down before you open the radiator, the radiator hoses, or other components of the cooling system.
– In the event of scalding, rinse the area affected immediately with lukewarm water.

Condition: The engine is cold

Preparatory work

– Remove the skid plate. (p. 106)

Main work

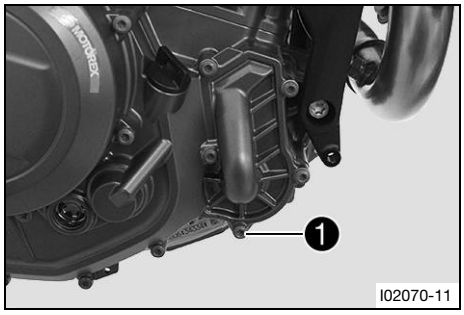

– Stand the motorcycle upright.
– Position an appropriate container under the engine.
– Remove screw ❶ with the sealing ring.

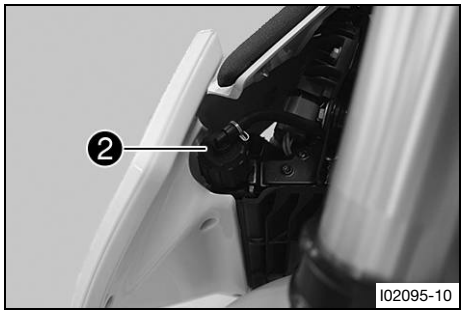

– Remove radiator cap ❷.
– Completely drain the coolant.

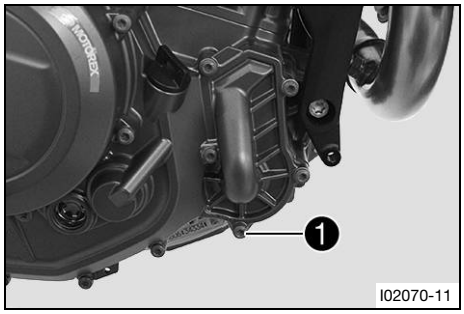

– Mount screw ❶ with the new sealing ring and tighten.

Screw, engine case	
M6×30	10 Nm (7.4 ft·lb_f)

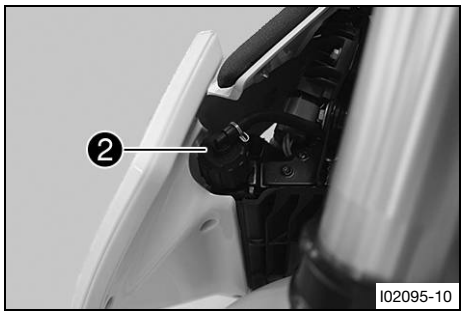

– Stand the motorcycle on a level surface using the side stand.
– Completely fill the radiator with coolant.

coolant	
Coolant (p. 180) Antifreeze protection to at least: −25 °C (−13.0 °F)	1.20 l (0.317 liq. gal_{US})

– Mount radiator cap ❷.

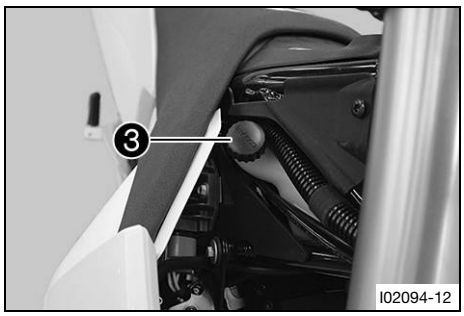

– Remove compensating tank cover ❸.
– Add coolant to the top marking.
– Mount cover of the compensating tank.

DANGER

Danger of poisoning Exhaust gases are toxic and inhaling them may result in unconsciousness and death.

– Always ensure that there is sufficient ventilation when running the engine.
– Use suitable exhaust extraction when starting or running the engine in an enclosed space.

– Start the engine and allow it to warm up.
– Stop the engine and allow it to cool down.

Reworking

– Check the coolant level. (p. 140)
– Install the skid plate. (p. 106)

17.1 Ride Mode

I01929-01

Condition	Meaning
Street	Homologated performance with balanced response; the motorcycle traction control allows normal slip on the rear wheel.
Offroad	Reduced homologated power with gentle responsiveness, the motorcycle traction control allows less slip on the rear wheel.
Rally (optional)	Throttle response and motorcycle traction control can be adjusted individually.

WARNING
Danger of accidents An incorrectly selected ride mode makes it more difficult to control the vehicle.
The riding modes are each only suitable for certain conditions.
– Always select a riding mode that suits the surface on which you are riding, the weather and the riding situation.

Vehicle tunings **Street**, **Offroad**, and **Rally** (optional) can be selected in the dashboard in submenu **Ride Mode**.
The most recently selected ride mode appears on the display.
The riding mode can also be changed while riding with the throttle grip closed.

17.2 Motorcycle traction control

I01937-01

The motorcycle traction control (**MTC**) lowers the engine torque in case of loss of traction in the rear wheel. Depending on the riding mode (p. 146), different amounts of slip are allowed when traction control is activated.

Note
When motorcycle traction control is switched off, the rear wheel may spin during strong acceleration and on surfaces with low grip, resulting in a risk of falling.
After the ignition is switched on, motorcycle traction control is enabled again.

In the combination instrument, the motorcycle traction control can be switched on or off via the **MTC** submenu (optional).

Note
When the motorcycle traction control is active, the TC indicator lamp flashes.
When motorcycle traction control is switched off, the TC indicator lamp lights up.

17.3 slip adjustment (optional)

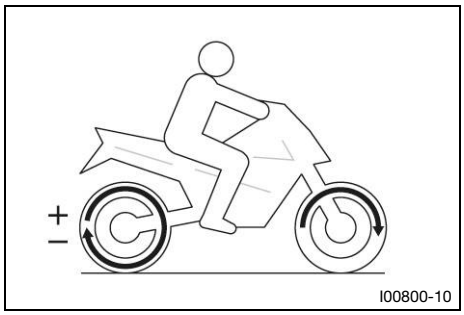

The spin adjuster is a motorcycle traction control function.
The slip adjustment allows the motorcycle traction control to be tuned through nine levels to the desired characteristic map.
Level 1 allows the maximum slip on the rear wheel, and level 9 the minimum.
The slip adjustment can be set while riding with a closed menu using the **UP** or **DOWN** button.

Note
The slip adjustment is only available in **Rally** riding mode (optional).

17.4 Throttle Response (optional)

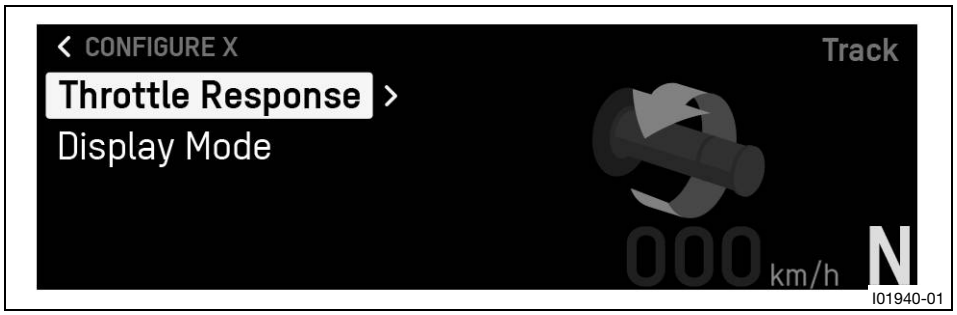

In the combination instrument the characteristics of the throttle response can be adjusted via the **Throttle Response** submenu.
The **Throttle Response** can also be set while riding with a closed throttle grip.

Note
Throttle Response is only available in riding mode **Rally** (optional).

17.5 Checking the basic position of the gear shift lever

Note
When driving, the gear shift lever must not touch the rider's boot when in the basic position.
If the shift lever is permanently touching the boot, the transmission will be subject to excessive load; this can cause a malfunction of the Easy Shift (optional).

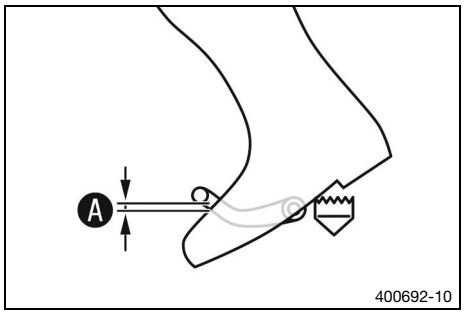

– Sit on the vehicle in the riding position and measure the distance Ⓐ between the upper edge of your boot and the shift lever.

Distance between the gear shift lever and upper edge of boot	10 mm … 20 mm (0.39 in … 0.79 in)

» If the distance does not meet the specifications:
  – Adjust the basic position of the gear shift lever. (p. 148)

17.6 Adjusting the basic position of the gear shift lever

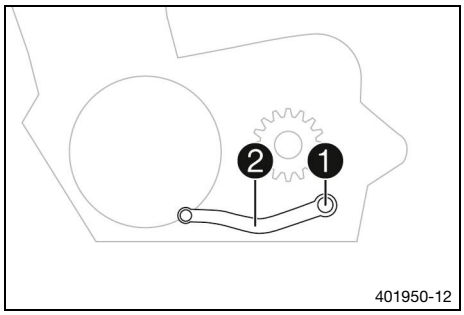

– Remove screws ❶ with the washers and remove gear shift lever ❷.

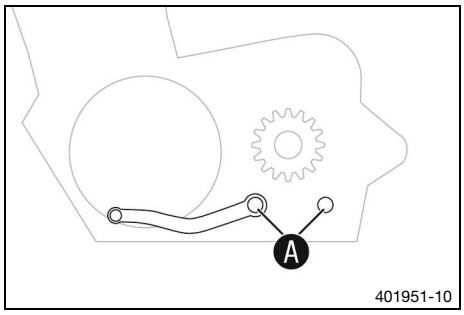

– Clean toothing Ⓐ of the gear shift lever and shift shaft.
– Mount shift lever ❷ on the shift shaft in the required position and engage the gearing.

The gear shift lever must not come into contact with any other vehicle components during the shift procedure.

Note
The range of adjustment is limited.

– Mount and tighten screw ❶ with the washers.

Screw, shift lever	
M6	14 Nm (10.3 ft·lb$_f$) **Loctite® 243**

18.1 Checking the engine oil level

Condition: The engine is at operating temperature

Preparatory work

– Stand the motorcycle upright on a level surface.

Main work

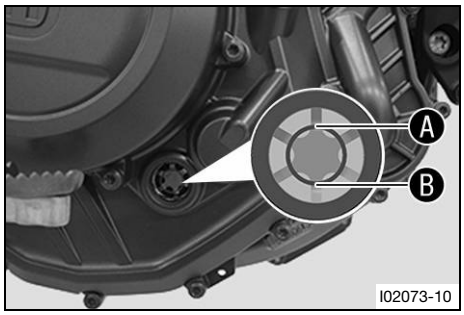

– Check the engine oil level.

The engine oil must be between marking Ⓐ and marking Ⓑ of the oil level viewer.
After switching off the engine, wait one minute before checking the level.

» If the engine oil level is not at the specified level:
  – Add engine oil. (p. 152)

18.2 Changing the engine oil and oil filter, cleaning the oil screens

WARNING

Danger of scalding Engine and gear oil heat up when the motorcycle is operated.

– Wear suitable protective clothing and safety gloves.
– In the event of scalding, rinse the area affected immediately with lukewarm water.

NOTE

Environmental hazard Hazardous substances cause environmental damage.

– Dispose of oils, grease, filters, fuel, cleaning agents, brake fluid, etc. correctly and in accordance with the applicable regulations.

Condition: The engine is at operating temperature

Preparatory work

– Stand the motorcycle on a level surface using the side stand.
– Remove the skid plate. (p. 106)

Main work

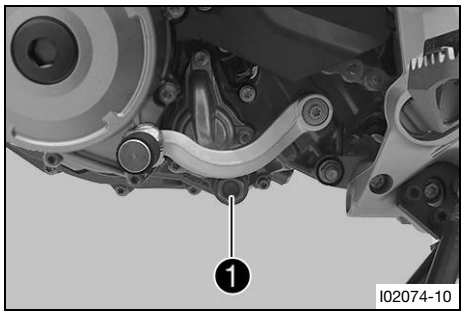

– Position an appropriate container under the engine.
– Remove screw plug ❶ together with the magnet, oil screen and O-rings.
– Allow the engine oil to drain completely.

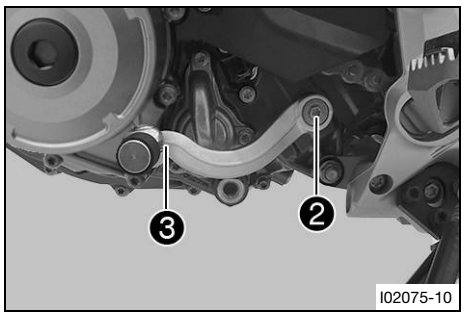

– Remove screw ❷ with the washers and take off shift lever ❸.

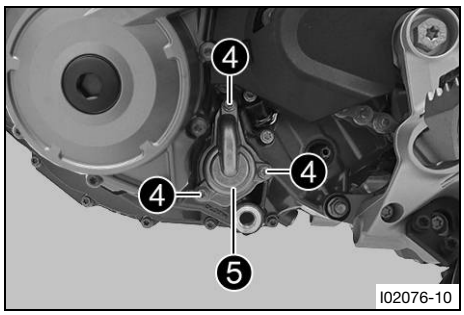

– Remove screws ❹. Take off the oil filter cover ❺ with oil filter and O-ring.
– Allow the engine oil to drain completely.
– Thoroughly clean the parts and the sealing surfaces.

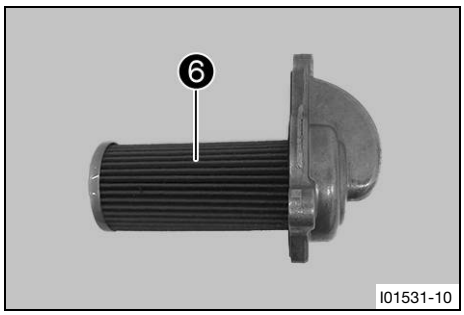

– Pull oil filter ❻ out of the oil filter cover.

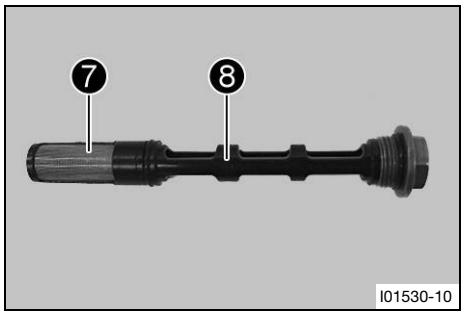

– Clean the oil screen ❼ and magnet ❽ thoroughly.
– Thoroughly clean the parts and the sealing surfaces.

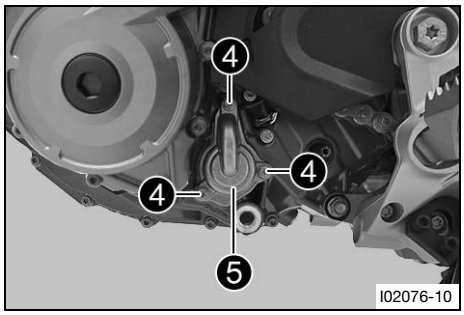

– Oil the O-ring of the oil filter cover.
– Insert the oil filter into the oil filter cover.
– Insert the oil filter cover ❺ with the oil filter.
– Mount and tighten screws ❹.

Screw, oil filter cover	
M6×20	10 Nm (7.4 ft·lb_f)

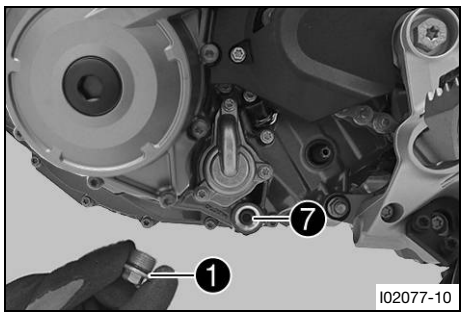

– Position oil screen ❼ with the O-rings.
– Mount and tighten screw plug ❶ with O-ring.

Plug, oil screen	
M20×1.5	20 Nm (14.8 ft·lb$_f$)

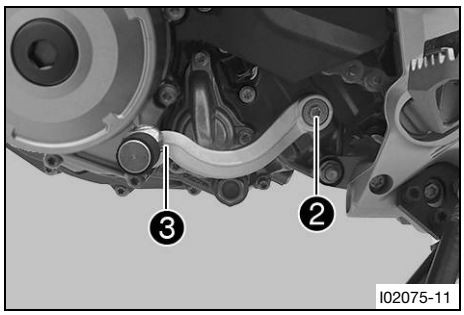

– Clean toothing of the gear shift lever and shift shaft.
– Mount shift lever ❸ on the shift shaft in the required position and engage the gearing.

The gear shift lever must not come into contact with any other vehicle components during the shift procedure.

Note
The range of adjustment is limited.

– Mount and tighten screw ❷ with washers.

Screw, shift lever	
M6	14 Nm (10.3 ft·lb$_f$) **Loctite® 243**

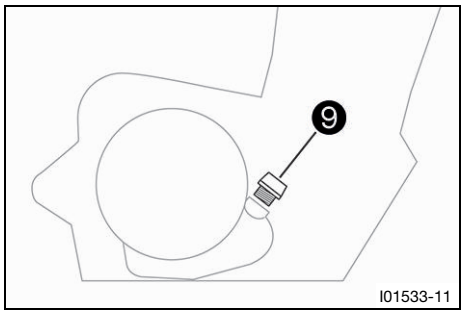

– Remove filler plug ❾ with the O-ring, and fill up with engine oil.

engine oil	
engine oil (SAE 10W/50) (p. 179) fully synthetic	1.70 l (0.449 liq. gal$_{US}$)

– Mount and tighten filler plug ❾ with the O-ring.

DANGER
Danger of poisoning Exhaust gases are toxic and inhaling them may result in unconsciousness and death.
– Always ensure that there is sufficient ventilation when running the engine.
– Use suitable exhaust extraction when starting or running the engine in an enclosed space.

– Start the engine and check it for leaks.

Reworking
– Install the skid plate. (p. 106)

18.3 Adding engine oil

Note
Too little engine oil or poor-quality engine oil will result in premature wear of the engine.

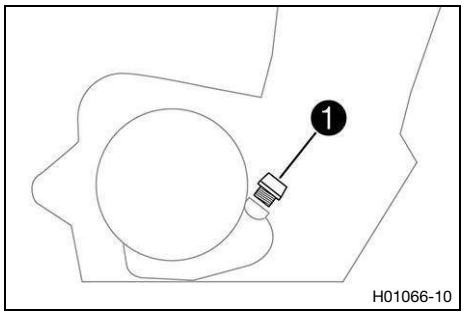

Main work

– Remove filler plug ❶ with the O-ring, and fill up with engine oil.
– Fill engine oil to the middle of the level viewer.

engine oil (SAE 10W/50) (p. 179) fully synthetic

Note
In order to achieve optimal engine oil performance, it is not advisable to mix different engine oils.
Husqvarna Mobility recommends changing the engine oil when necessary.

– Mount and tighten oil plug ❶ with O-ring.

DANGER
Danger of poisoning Exhaust gases are toxic and inhaling them may result in unconsciousness and death.
– Always ensure that there is sufficient ventilation when running the engine.
– Use suitable exhaust extraction when starting or running the engine in an enclosed space.

– Start the engine and check it for leaks.

Reworking

– Check the engine oil level. (p. 149)

19.1 Cleaning the motorcycle

NOTE

Material damage Components can be damaged or destroyed if a high-pressure cleaner is used incorrectly.

The high pressure forces water into the electrical components, socket connectors, clutch cables, and bearings, etc.

Too high a pressure can cause malfunctions and destroy components.

– Do not direct the water jet directly on to electrical components, socket connectors, clutch cables, or bearings.
– Maintain a minimum distance between the nozzle of the high-pressure cleaner and the component.

Minimum distance	60 cm (23.6 in)

NOTE

Environmental hazard Hazardous substances cause environmental damage.

– Dispose of oils, grease, filters, fuel, cleaning agents, brake fluid, etc. correctly and in accordance with the applicable regulations.

Note

To maintain the value and appearance of the motorcycle over a long period, clean it regularly.

Avoid direct sunshine when cleaning the motorcycle.

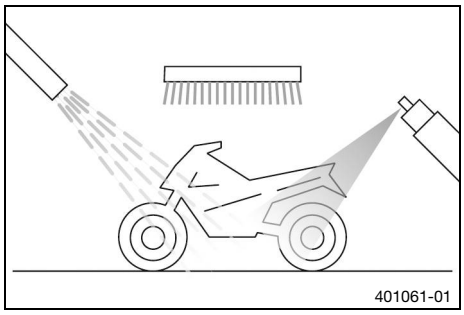

– Seal the exhaust system to prevent water from entering into it.
– Remove loose dirt first with a soft jet of water.
– Spray the heavily soiled parts with a standard commercial motorcycle cleaner and clean using a brush.

Never apply motorcycle cleaner to a dry vehicle; always rinse the vehicle with water first.

Environmentally neutral universal cleaning agent
(p. 183)

Note

Use warm water containing standard motorcycle cleaner and a soft sponge.

If the vehicle was driven in road salt, clean it with cold water. Warm water enhances the corrosive effects of salt.

– After rinsing the motorcycle with a gentle spray of water, allow it to dry thoroughly.
– Remove the cover from the exhaust system.

WARNING

Danger of accidents Moisture and dirt impair the brake system.

– Brake carefully several times to dry out and remove dirt from the brake pads and the brake discs.

– After cleaning, ride the vehicle a short distance until the engine warms up.

Note
The heat produced causes water to evaporate at inaccessible locations in the engine and on the brake system.

– Push back the protection caps of the handlebar controls to allow any water that has penetrated to evaporate.
– After the motorcycle has cooled off, lubricate all moving parts and pivot points.
– Clean the chain. (p. 99)

WARNING
Danger of accidents Oil, grease or wax on the brake discs reduces the brake action.
– Always keep the brake discs free of oil, fat and wax.
– Clean the brake discs with brake cleaner when necessary.

– Treat bare metal (except for brake discs and the exhaust system) with an anticorrosive.

Preserving materials (p. 183)

– Treat all painted parts with a mild paint care product.

Do not polish parts that were matte when delivered as this would strongly impair the material quality.

Shine spray with beading effect (p. 183)

– Treat all plastic parts and powder-coated parts with a mild cleaning and care product.

Cleaning agents for plastics, glass, lacquers, metals, windshields and visors (p. 183)

– Lubricate the ignition/steering lock.

Universal oil spray (p. 179)

19.2 Checks and maintenance steps for winter operation

WARNING
Danger of accidents Moisture and dirt impair the brake system.
– Brake carefully several times to dry out and remove dirt from the brake pads and the brake discs.

WARNING
Danger of accidents Salt on the roads impairs the brake system.
– Brake carefully several times to remove salt from the brake linings and the brake discs.

Note
If you use the motorcycle in winter, salt can be expected on the roads. You should therefore take precautions against aggressive road salt.

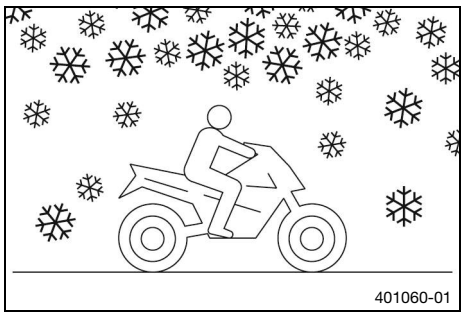

– Clean the motorcycle. (p. 153)
– Clean brake system.

After **EVERY** trip on salted roads, thoroughly clean the brake calipers and brake linings, after they have cooled down and without removing them, with cold water and dry them carefully.
After riding on salted roads, thoroughly clean the motorcycle with cold water and dry it well.

Note
Warm water enhances the corrosive effects of salt.

– Treat the engine, swingarm, and all other bare or zinc-plated parts (except the brake discs) with a wax-based anticorrosive.

Corrosion inhibitor must not come in contact with the brake discs as this would greatly reduce the braking force.

– Clean the chain. (p. 99)

20.1 Storage

WARNING

Danger of poisoning Fuel is harmful to health.

- Do not allow fuel to come into contact with skin, eyes, or clothing.
- Consult a doctor immediately if fuel has been ingested.
- Do not inhale fuel vapors.
- Rinse the affected area immediately with plenty of water in the event of contact with skin.
- Rinse eyes thoroughly with water and consult a doctor immediately if fuel comes into contact with eyes.
- If fuel spills on to your clothing, change the clothing.
- Store fuel properly in a suitable container and keep out of the reach of children.

Note

If the vehicle will not be ridden for an extended period, additional steps are recommended.

Before storing the motorcycle, check all parts for function and wear. If service, repairs, or replacements are necessary, you should do this during the storage period (less overload of the authorized partner). This allows you to avoid long waiting periods when the next season starts.

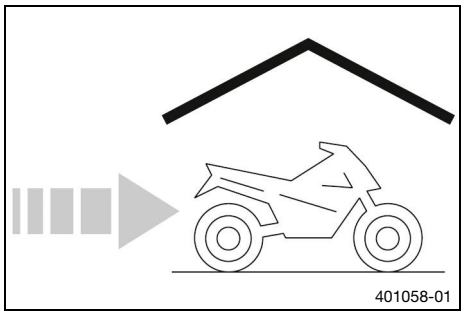

- When refueling for the last time before taking the motorcycle out of service, add fuel additive.

Fuel additive (p. 178)

- Refuel. (p. 81)

Tip

Fill the fuel tank completely as specified, using fuel with the lowest possible ethanol content.

- Clean the motorcycle. (p. 153)
- Change the engine oil and the oil filter, clean the oil screens. (p. 149)
- Check the frost protection and coolant level. (p. 139)
- Check the tire pressure. (p. 126)
- Remove the 12 V battery. (p. 128)
- Charge the 12 V battery. (p. 129)

Storage temperature of the 12 V battery without direct sunlight	0 °C … 35 °C (32.0 °F … 95.0 °F)

- Store the vehicle in a dry location that is not subject to large fluctuations in temperature.

Note

Husqvarna Mobility recommends picking up the motorcycle.

- Raise the motorcycle with a lift stand. (p. 90)

Cover the motorcycle with a tarp or cover that is permeable to air.
Do not use non-porous materials because they prevent humidity from escaping and thus cause corrosion.

Note

Avoid running the engine of a motorcycle in storage for a short time only. Since the engine cannot warm up properly, the water vapor produced during combustion condenses and causes valves and the exhaust system to rust.

20.2 Preparing for use after storage

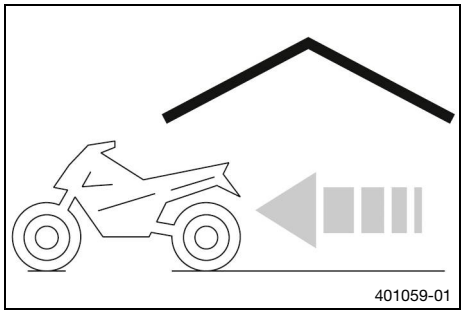

- Remove the motorcycle from the lift stand. (p. 91)
- Charge the 12 V battery. (p. 129)
- Install the 12 V battery. (p. 128)
- Set time and date. (p. 64)
- Perform checks and maintenance measures when preparing for use. (p. 73)
- Take a test ride.

21.1 troubleshooting

Cause	Finding	Remedy
The engine does not turn over when the start button is actuated	Operating error 12 V battery discharged Fuse **1**, **2** or **3** blown Main fuse blown No ground connection present	– Carry out the starting procedure. (p. 73) – Charge the 12 V battery. (p. 129) – Check the open-circuit current. – Change the fuses of individual electrical power consumers. (p. 133) – Change the main fuse. (p. 131) – Check the ground connection.
The engine only turns over if the clutch lever is pulled	The vehicle is in gear The vehicle is in gear and the side stand is folded out	– Shift the transmission into the neutral position. – Shift the transmission into the neutral position.
The engine turns but does not start	Operating error Fuse **3** blown Quick-lock coupling not joined Malfunction in the electronic fuel injection Throttle opened while starting	– Carry out the starting procedure. (p. 73) – Change the fuses of individual electrical power consumers. (p. 133) – Join quick-lock couplings. – Read out the fault memory using the diagnostics tool. – When starting, **DO NOT** open the throttle. – Carry out the starting procedure. (p. 73)
Engine has too little power	Air filter is very dirty Fuel screen is very dirty Fuel filter is very dirty Malfunction in the electronic fuel injection	– Remove the air filter. (p. 97) – Install the air filter. (p. 98) – Change the fuel screen. – Check the fuel pressure. – Read out the fault memory using the diagnostics tool.
Engine overheats	Too little coolant in cooling system Radiator fins very dirty Foam formation in the cooling system Buckled or damaged radiator hose Thermostat defective Fuse **4** blown Defect in radiator fan system Air in cooling system	– Check the transmission and cooling system for leaks. – Check the coolant level. (p. 140) – Clean the radiator fins. – Drain the coolant. (p. 141) – Fill/bleed the cooling system. (p. 142) – Change the radiator hose. – Check the thermostat. – Change the fuses of individual electrical power consumers. (p. 133) – Check the radiator fan system. – Fill/bleed the cooling system. (p. 142)
Malfunction indicator light lights up	Malfunction in the electronic fuel injection	– Read out the fault memory using the diagnostics tool.

Cause	Finding	Remedy
The engine dies during the trip	Lack of fuel Fuse **1**, **2** or **3** blown	– Refuel. (p. 81) – Change the fuses of individual electrical power consumers. (p. 133)
ABS warning lamp lights up	ABS fuse blown Large difference in wheel speeds of the front and rear wheels Malfunction in ABS	– Change the ABS fuses. (p. 132) – Stop the vehicle, switch off the ignition, and start it again. – Read out the ABS fault memory using the diagnostic tool.
High oil consumption	Engine vent hose bent The engine oil level is too high The engine oil is too thin (low viscosity)	– Route the vent hose without bends or change it if necessary. – Check the engine oil level. (p. 149) – Change the engine oil and the oil filter, clean the oil screens. (p. 149)
Headlight and parking light are not functioning	Fuse **6** blown	– Change the fuses of individual electrical power consumers. (p. 133)
Turn signal, brake light, and horn are not functional	Fuse **5** blown	– Change the fuses of individual electrical power consumers. (p. 133)
Time is not displayed or not correctly displayed	Fuse **1** blown	– Change the fuses of individual electrical power consumers. (p. 133) – Set time and date. (p. 64)
12 V battery discharged	Ignition was not switched off when vehicle was parked The 12-V battery is not being charged by the alternator	– Charge the 12 V battery. (p. 129) – Check the charging voltage. – Check the open-circuit current.
The dashboard shows nothing on the display	Fuse **1** or **2** blown	– Change the fuses of individual electrical power consumers. (p. 133) – Set time and date. (p. 64)
Speedometer in combination instrument is not functioning	Speedometer wiring harness is damaged or plug-in connection is oxidized	– Check the wiring harness and plug-in connector.

22.1 Engine

22.1.1 Technical data of the engine

Design	1-cylinder 4-stroke engine, water-cooled
Displacement	692.7 cm³ (42.271 in³)
Stroke	80 mm (3.15 in)
Bore	105 mm (4.13 in)
Compression ratio	12.7:1
idle speed	
Coolant temperature: ≥ 70 °C (≥ 158.0 °F)	1,650 ±50 rpm (27.50 ±0.83 Hz)
Control	OHC, intake with cam levers, exhaust controlled by rocker arm, chain drive
Valve diameter, intake	42 mm (1.65 in)
Valve diameter, exhaust	34 mm (1.34 in)
Valve clearance, cold	
Intake at: 20 °C (68.0 °F)	0.10 mm … 0.15 mm (0.0039 in … 0.0059 in)
Exhaust at: 20 °C (68.0 °F)	0.22 mm … 0.27 mm (0.0087 in … 0.0106 in)
Crankshaft bearing	2-cylinder roller bearing
big (bottom) end bearing	Plain bearing
Wrist pin bearing	Piston pin with **DLC** coating
Piston	Forged light alloy
Piston rings	1 compression ring, 1 lower compression ring, 1 oil ring with spring expander
Engine lubrication	Semi-dry sump with 1 pressure pump (forced oil lubrication) and 1 suction pump (crankcase evacuation)
Primary transmission	36:79
Clutch	Multi-disc wet clutch / hydraulically activated
Transmission	6 speed transmission, claw shift
Gear ratios	
1st gear	14:35
2nd gear	16:28
3rd gear	20:27
4th gear	21:23
5th gear	23:22
6th gear	23:20
Mixture formation	Electronic fuel injection
Ignition system	Fully electronic ignition

Alternator	• 12 V • 350 W (0.469 hp)
Spark plug	
Inside spark plug	NGK LKAR9BI-10
Outside spark plug	NGK LMAR7DI-10
Plug gap of spark plug	1.0 mm (0.039 in)
Cooling	Liquid cooling, permanent circulation of coolant by water pump
Starting aid	Starter motor, automatic decompression

22.1.2 Coolant capacity

coolant	
Coolant (p. 180) Antifreeze protection to at least: −25 °C (−13.0 °F)	1.20 l (0.317 liq. gal_{US})

22.1.3 Filling quantity of engine oil

engine oil	
engine oil (SAE 10W/50) (p. 179) fully synthetic	1.70 l (0.449 liq. gal_{US})

22.2 Chassis

22.2.1 Technical data - chassis

Frame	Lattice frame made of chrome molybdenum steel tubing, powder-coated
Suspension travel:	
front	265 mm (10.43 in)
rear	250 mm (9.84 in)
Brake system	
front	Disc brake with dual-piston brake caliper, floating
rear	Disc brake with single-piston brake caliper, floating
Brake discs - diameter	
front	300 mm (11.81 in)
rear	240 mm (9.45 in)
Brake disc wear limit	
front	4.5 mm (0.177 in)
rear	4.5 mm (0.177 in)
Tire pressure, road, solo	

front	1.8 bar (26.1 psi)
rear	1.8 bar (26.1 psi)
Tire pressure with passenger / full payload	
front	2.2 bar (31.9 psi)
rear	2.2 bar (31.9 psi)
Tire pressure, offroad, solo	
front	1.5 bar (21.8 psi)
rear	1.5 bar (21.8 psi)
Final drive	15:46
Chain	5/8 x 1/4” X-ring
Steering head angle	62° (1.08 rad)
Wheelbase	1,494 ±15 mm (58.82 ±0.59 in)
Seat Height unloaded	923 mm (36.34 in)
Ground clearance unloaded	265 mm (10.43 in)
Weight without fuel approx.	151.1 kg (333.12 lb)
Maximum permissible front axle load	150 kg (330.7 lb)
Maximum permissible rear axle load	200 kg (440.9 lb)
Maximum permissible total weight	350 kg (771.6 lb)

22.2.2 tires

Tire front	Rear tire
90/90 - 21 M/C 54T M+S TL Continental TKC 80 Twinduro	140/80 - 18 M/C 70R M+S TL Continental TKC 80 Twinduro
The tires specified represent one of the possible series production tires. For alternative manufacturers, if any, contact an authorized manufacturer or qualified tire dealership. If local road approval regulations apply, these and the respective technical specifications must be observed.	

22.2.3 Fuel tank capacity

Fuel tank capacity, approx.	
Super unleaded (ROZ 95) (p. 178)	13.2 l (3.49 liq. gal_{US})

Fuel reserve, approx.	
Super unleaded (ROZ 95) (p. 178)	4.2 l (1.11 liq. gal_{US})

22.3 Electrics

22.3.1 Battery

12 V battery	YTZ10S	Battery voltage: 12 V Nominal capacity: 8.6 Ah Maintenance-free

22.3.2 Fuses

Fuse	58011109130	30 A
Fuse	75011088015	15 A
Fuse	75011088010	10 A
Fuse	75011088025	25 A

22.3.3 Lamps

Headlight	LED
Parking light	LED
Dashboard illumination and indicator lights	LED
Turn signal	LED
Brake/tail light	LED
License plate lighting	LED

22.4 Fork

22.4.1 Technical data - fork

Fork part number	A606C110Y401000

Fork	**WP Suspension XPLOR**
Compression damping	
Standard	15 clicks
Rebound damping	
Standard	15 clicks
Spring length with preload spacer(s)	440 mm (17.32 in)
Spring rate	
Medium (standard)	5.6 N/mm (31.98 lb_f/in)
Fork length	895 mm (35.24 in)

22.4.2 Fork oil capacity

Fork oil per fork leg	
Fork oil (48601166S1) (SAE 4) (p. 179)	620 ±5 ml (20.96 ±0.17 fl. oz_{US})

22.5 Shock absorber

22.5.1 Technical data - shock absorber

Shock absorber part number	A606C410Y313000

Shock absorber	**WP Suspension XPLOR**
High-speed compression damping	
Standard	2 turns (720°)
Low-speed compression damping	
Standard	15 clicks
Rebound damping	
Standard	15 clicks
Preload	
Standard	18 mm (0.71 in)
Spring rate	
Soft	66 N/mm (376.9 lb_f/in)
Medium (standard)	72 N/mm (411.1 lb_f/in)
Hard	81 N/mm (462.5 lb_f/in)
Spring length	227 mm (8.94 in)
Gas assisted	16 bar (232 psi)
Static sag	30 mm (1.18 in)
Rider sag	85 mm (3.35 in)
Installation position	395 mm (15.55 in)

22.5.2 Shock absorber oil

Shock absorber oil	
Shock absorber oil (50180751S1) (SAE 2.5) (p. 180)	Fill to the maximum mark

22.6 Tightening torque

22.6.1 Engine tightening torques

Screw plug, oil hole (cylinder head) EJOT ALtracs®	9 Nm (6.6 ft·lb$_f$)
Screw, membrane fixation M3	2 Nm (1.5 ft·lb$_f$) Loctite® 243
Hose clip, intake flange M4	2.5 Nm (1.84 ft·lb$_f$)
Oil nozzle for clutch lubrication M4	0.4 Nm (0.30 ft·lb$_f$)
Screw, axial lock of camshaft and balancer shaft M5	6 Nm (4.4 ft·lb$_f$) Loctite® 243
Screw, bearing retainer (gearbox) M5	6 Nm (4.4 ft·lb$_f$) Loctite® 243
Screw, bearing retainer (shift drum bearing) M5	5 Nm (3.7 ft·lb$_f$) Loctite® 243
Detent arm screw M5	6 Nm (4.4 ft·lb$_f$) Loctite® 243
Screw, gear position sensor M5	5 Nm (3.7 ft·lb$_f$) Loctite® 243
Shift shaft sensor cover M5	5 Nm (3.7 ft·lb$_f$) Loctite® 243
Screw, crankshaft position sensor M5	6 Nm (4.4 ft·lb$_f$) Loctite® 243
Screw, oil pump cover M5	6 Nm (4.4 ft·lb$_f$) Loctite® 243
Oil jet 50 M5	2 Nm (1.5 ft·lb$_f$)
Remaining screws for engine M5	6 Nm (4.4 ft·lb$_f$)
Screw, clutch spring M5	6 Nm (4.4 ft·lb$_f$)
Screw, shift shaft sensor M5	5 Nm (3.7 ft·lb$_f$) Loctite® 243
Screw, engine case M6×30	10 Nm (7.4 ft·lb$_f$)

Screw, engine case M6×80		10 Nm (7.4 ft·lb$_f$)
Screw, clutch cover M6×30	1.	3 Nm (2.2 ft·lb$_f$)
	2.	90° (1.57 rad)
Screw, clutch cover M6×65	1.	3 Nm (2.2 ft·lb$_f$)
	2.	90° (1.57 rad)
Screw, ignition cover M6×30	1.	3 Nm (2.2 ft·lb$_f$)
	2.	90° (1.57 rad)
Screw, cylinder head M6		10 Nm (7.4 ft·lb$_f$) **Loctite® 243**
Screw, timing chain shaft M6×25		10 Nm (7.4 ft·lb$_f$) **Loctite® 243**
Crankcase ventilation main jet 100 M6×0.75		0.8 Nm (0.59 ft·lb$_f$)
Vacuum connection M6		2.5 Nm (1.84 ft·lb$_f$) **Loctite® 243**
Screw, camshaft bearing bridge M6×80		10 Nm (7.4 ft·lb$_f$)
Screw, camshaft bearing bridge M6×90		10 Nm (7.4 ft·lb$_f$)
Chain guard M6		10 Nm (7.4 ft·lb$_f$)
Screw, resonator M6		10 Nm (7.4 ft·lb$_f$)
Screw, valve cover M6		10 Nm (7.4 ft·lb$_f$)
Screw, cylinder M6		10 Nm (7.4 ft·lb$_f$) **Loctite® 243**
Shift star screw M6		10 Nm (7.4 ft·lb$_f$) **Loctite® 243**
Screw, shift lever M6		14 Nm (10.3 ft·lb$_f$) **Loctite® 243**
Stator screw M6		10 Nm (7.4 ft·lb$_f$) **Loctite® 243**

Screw, starter motor M6		10 Nm (7.4 ft·lb$_f$)
Screw, ignition coil M6		10 Nm (7.4 ft·lb$_f$)
Screw, guide rail M6×30		10 Nm (7.4 ft·lb$_f$) **Loctite® 243**
Screw, upper guide rail M6×20		10 Nm (7.4 ft·lb$_f$) **Loctite® 243**
Cap nut, water pump impeller M6		6 Nm (4.4 ft·lb$_f$) **Loctite® 243**
Screw, thermostat case M6		10 Nm (7.4 ft·lb$_f$)
Screw, oil filter cover M6×20		10 Nm (7.4 ft·lb$_f$)
Remaining screws for engine M6		10 Nm (7.4 ft·lb$_f$)
Screw, tensioning rail M6×30		10 Nm (7.4 ft·lb$_f$) **Loctite® 243**
Oil nozzle for piston cooling M6×0.75		4 Nm (3.0 ft·lb$_f$)
Crankshaft clamp screw plug M8		10 Nm (7.4 ft·lb$_f$)
Setscrew, camshaft bearing bridge M8		6 Nm (4.4 ft·lb$_f$) **Loctite® 243**
Screw, rocker arm shaft M8×40		15 Nm (11.1 ft·lb$_f$)
Stud, exhaust flange M8		15 Nm (11.1 ft·lb$_f$) **Loctite® 243**
Oil channel screw plug M10×1		15 Nm (11.1 ft·lb$_f$) **Loctite® 243**
Screw, cylinder head M10 Long-life grease	1.	15 Nm (11.1 ft·lb$_f$)
	2.	30 Nm (22.1 ft·lb$_f$)
	3.	45 Nm (33.2 ft·lb$_f$)
	4.	60 Nm (44.3 ft·lb$_f$)
Spark plug outside M10×1		11 Nm (8.1 ft·lb$_f$)

Screw, release for timing chain tensioner M10×1	8 Nm (5.9 ft·lb$_f$)
Coolant temperature sensor on the cylinder head M10×1.25	12 Nm (8.9 ft·lb$_f$)
Oil pressure sensor M10×1	10 Nm (7.4 ft·lb$_f$)
Screw, front sprocket M10	60 Nm (44.3 ft·lb$_f$) **Loctite® 243**
Spark plug inside M12×1.25	18 Nm (13.3 ft·lb$_f$)
Screw plug, oil pressure control valve M14×1.5	15 Nm (11.1 ft·lb$_f$)
Nut, rotor M18×1.5	100 Nm (73.8 ft·lb$_f$) **Loctite® 243**
Nut, primary gear M20LH×1.5	90 Nm (66.4 ft·lb$_f$) **Loctite® 243**
Nut, inner clutch hub M20×1.5	140 Nm (103.3 ft·lb$_f$)
Plug, oil screen M20×1.5	20 Nm (14.8 ft·lb$_f$)
Plastic screw, ignition cover M24×1.5	8 Nm (5.9 ft·lb$_f$)
Screw plug, timing chain tensioner M24×1.5	25 Nm (18.4 ft·lb$_f$)

22.6.2 Chassis tightening torques

Screw, chain guard **EJOT PT®**	1.5 Nm (1.11 ft·lb$_f$)
Screw, radiator guard **EJOT PT®**	2 Nm (1.5 ft·lb$_f$)
Screw, tail light **EJOT PT®**	2 Nm (1.5 ft·lb$_f$)
Screw, rear reservoir cover	3.5 Nm (2.58 ft·lb$_f$)
Screw, front reservoir cover	1 Nm (0.7 ft·lb$_f$)
Remaining EJOT screws **EJOT PT®**	2 Nm (1.5 ft·lb$_f$)
Fitting, side stand sensor M4	2 Nm (1.5 ft·lb$_f$) **Loctite® 243**
Remaining screws on chassis M4	3 Nm (2.2 ft·lb$_f$)

Remaining nuts on chassis M4	3 Nm (2.2 ft·lb$_f$)
Screw, throttle twist grip M5	3.5 Nm (2.58 ft·lb$_f$)
Remaining nuts on chassis M5	5 Nm (3.7 ft·lb$_f$)
Remaining screws on chassis M5	5 Nm (3.7 ft·lb$_f$)
Screw, heat guard M5	8 Nm (5.9 ft·lb$_f$)
Screw, brake line holder on link fork M5	5 Nm (3.7 ft·lb$_f$)
Screw, foot brake lever stub M5	6 Nm (4.4 ft·lb$_f$) **Loctite® 243**
Screw, tail section to license plate holder support M5	2.5 Nm (1.84 ft·lb$_f$)
Screw, license plate holder support upper part to lower part M5×12	3.5 Nm (2.58 ft·lb$_f$)
Screw, combination instrument M5	5 Nm (3.7 ft·lb$_f$) **Loctite® 243**
Screw, fuel pump M5	5 Nm (3.7 ft·lb$_f$) **Loctite® 243**
Screw, fuel level sensor M5	5 Nm (3.7 ft·lb$_f$) **Loctite® 243**
Screws, wheel speed sensor holder M5	3 Nm (2.2 ft·lb$_f$) **Loctite® 243**
Screw, headlight mask M5	2 Nm (1.5 ft·lb$_f$)
Screw, fuel hose clamp on fuel tank M5	5 Nm (3.7 ft·lb$_f$)
Screw, trim M5	3.5 Nm (2.58 ft·lb$_f$)
Screw, front trim M5	3.5 Nm (2.58 ft·lb$_f$)
Cable on starter motor screw M5	3 Nm (2.2 ft·lb$_f$)
Screw, fuel tank closure flange M5	2.5 Nm (1.84 ft·lb$_f$)
Screw, combination switch, left M5	3.5 Nm (2.58 ft·lb$_f$)
Screw, radiator fan cover M5	3.2 Nm (2.36 ft·lb$_f$)

Screw, seat lock cable M5	3 Nm (2.2 ft·lb$_f$)
Screw, tail section to license plate holder M5	2.5 Nm (1.84 ft·lb$_f$)
Screw, wheel speed sensor bracket M5	3 Nm (2.2 ft·lb$_f$)
Screw, lower tail section M5×12	5 Nm (3.7 ft·lb$_f$)
Screw, tail light M5	3 Nm (2.2 ft·lb$_f$)
Screw, ABS control unit M6	5 Nm (3.7 ft·lb$_f$)
Screw, push rod ball joint on the rear brake cylinder M6	10 Nm (7.4 ft·lb$_f$) **Loctite® 243**
Remaining nuts on chassis M6	10 Nm (7.4 ft·lb$_f$)
Remaining screws on chassis M6	10 Nm (7.4 ft·lb$_f$)
Screw, brake fluid reservoir for rear brake M6	5 Nm (3.7 ft·lb$_f$)
Screw, main silencer clamp M6	8 Nm (5.9 ft·lb$_f$)
Screw, rear brake disc M6	14 Nm (10.3 ft·lb$_f$) **Loctite® 243**
Screw, front brake disc M6	14 Nm (10.3 ft·lb$_f$) **Loctite® 243**
Screw, wheel speed sensor M6	6 Nm (4.4 ft·lb$_f$)
Screw, electrical holder in fuel tank M6	2 Nm (1.5 ft·lb$_f$)
Screw, electrical holder under 12-V battery M6	10 Nm (7.4 ft·lb$_f$)
Fitting on rear brake cylinder M6	10 Nm (7.4 ft·lb$_f$)
Screw, license plate holder to tank, top M6	8 Nm (5.9 ft·lb$_f$)
Screw, license plate holder to tank, bottom M6	8 Nm (5.9 ft·lb$_f$)
Screw, chain guide M6	10 Nm (7.4 ft·lb$_f$)
Screw, chain slider guard M6	10 Nm (7.4 ft·lb$_f$) **Loctite® 243**

Screw, chain guard M6	2 Nm (1.5 ft·lb$_f$) **Loctite® 243**
Screw, air filter box, on frame M6	6 Nm (4.4 ft·lb$_f$)
Screw, radiator bracket, top M6	10 Nm (7.4 ft·lb$_f$)
Screw, radiator bracket, bottom M6	8 Nm (5.9 ft·lb$_f$)
Screw, upper part of the air filter box M6	5 Nm (3.7 ft·lb$_f$)
Screw, magnetic holder on side stand M6	6 Nm (4.4 ft·lb$_f$) **Loctite® 243**
Screw, voltage regulator M6	6 Nm (4.4 ft·lb$_f$)
Screw, SAS valve M6	10 Nm (7.4 ft·lb$_f$)
Screw, upper tail section M6×15	4 Nm (3.0 ft·lb$_f$)
Screw, seat lock M6	5 Nm (3.7 ft·lb$_f$) **Loctite® 243**
Screw, ignition lock M6	10 Nm (7.4 ft·lb$_f$) **Loctite® 243**
Screw, clutch lever assembly M6	5 Nm (3.7 ft·lb$_f$)
Screw, front brake assembly M6	5 Nm (3.7 ft·lb$_f$)
Radiator bleeder screw M6	8 Nm (5.9 ft·lb$_f$)
Screw, battery terminal M6	4.5 Nm (3.32 ft·lb$_f$)
Screw, battery cable to starter motor M6	6 Nm (4.4 ft·lb$_f$)
Screw, front sprocket cover M6	8 Nm (5.9 ft·lb$_f$)
Screw, seat cowl pad, front M6×16	6 Nm (4.4 ft·lb$_f$)
Screw, compensating tank radiator M6	2 Nm (1.5 ft·lb$_f$)
Screw, ABS modulator on frame M6	10 Nm (7.4 ft·lb$_f$)
Screw, 6-D sensor M6	8 Nm (5.9 ft·lb$_f$)

Nut, rear sprocket screw M8	35 Nm (25.8 ft·lb$_f$) **Loctite® 2701**
Nut, manifold on cylinder head M8	13 Nm (9.6 ft·lb$_f$) Copper paste
Remaining nuts on chassis M8	25 Nm (18.4 ft·lb$_f$)
Remaining screws on chassis M8	25 Nm (18.4 ft·lb$_f$)
Screw, exhaust clamp M8	12 Nm (8.9 ft·lb$_f$) Copper paste
Screw, front brake caliper M8	25 Nm (18.4 ft·lb$_f$) **Loctite® 243**
Screw, main silencer holder on fuel tank M8	25 Nm (18.4 ft·lb$_f$)
Screw, main silencer holder M8	25 Nm (18.4 ft·lb$_f$)
Screw, spring holder plate on the side stand bracket M8	16 Nm (11.8 ft·lb$_f$) **Loctite® 243**
Screw, heel guard M8×12	5 Nm (3.7 ft·lb$_f$) **Loctite® 243**
Screw, foot brake lever M8	25 Nm (18.4 ft·lb$_f$) **Loctite® 243**
Screw, footrest bracket, rear M8×16	25 Nm (18.4 ft·lb$_f$)
Screw, front footrest bracket M8	25 Nm (18.4 ft·lb$_f$) **Loctite® 243**
Screw, top triple clamp M8	17 Nm (12.5 ft·lb$_f$)
Screw, bottom triple clamp M8	12 Nm (8.9 ft·lb$_f$)
Screw, fork shoe M8	15 Nm (11.1 ft·lb$_f$)
Screw, steering stem M8	20 Nm (14.8 ft·lb$_f$) **Loctite® 243**
Screw, grab handle M8	10 Nm (7.4 ft·lb$_f$)
Screw, chain slider M8	15 Nm (11.1 ft·lb$_f$) **Loctite® 243**

Screw, fuel tank, top M8	25 Nm (18.4 ft·lb$_f$) **Loctite® 243**
Screw, license plate holder, bottom right M8	25 Nm (18.4 ft·lb$_f$) **Loctite® 243**
Screw, fuel tank roller M8	15 Nm (11.1 ft·lb$_f$)
Handlebar clamp screw M8	20 Nm (14.8 ft·lb$_f$)
Screw, side stand bracket M8	16 Nm (11.8 ft·lb$_f$) **Loctite® 243**
Screw, linkage lever on frame M8	30 Nm (22.1 ft·lb$_f$) **Loctite® 243**
Screw, license plate holder, bottom left M8	25 Nm (18.4 ft·lb$_f$)
Banjo bolt, brake line M10×1	25 Nm (18.4 ft·lb$_f$)
Engine mounting bolt front M10	45 Nm (33.2 ft·lb$_f$) **Loctite® 243**
Remaining nuts on chassis M10	45 Nm (33.2 ft·lb$_f$)
Remaining screws on chassis M10	45 Nm (33.2 ft·lb$_f$)
Top shock absorber screw M10	45 Nm (33.2 ft·lb$_f$) **Loctite® 243**
Bottom shock absorber screw M10	45 Nm (33.2 ft·lb$_f$) **Loctite® 243**
Screw, handlebar mount M10	45 Nm (33.2 ft·lb$_f$) **Loctite® 243**
Screw, engine bearer on frame M10	45 Nm (33.2 ft·lb$_f$)
Screw, side stand M10	35 Nm (25.8 ft·lb$_f$) **Loctite® 243**
Engine mounting bolt rear M10	60 Nm (44.3 ft·lb$_f$) **Loctite® 243**
Oxygen sensor M12×1.25	25 Nm (18.4 ft·lb$_f$) Copper paste

Screw, swingarm pivot M12×1.5	80 Nm (59.0 ft·lb_f)
Nut, linkage lever on angle lever M14×1.5	100 Nm (73.8 ft·lb_f)
Nut, angle lever to link fork M14×1.5	100 Nm (73.8 ft·lb_f)
Screw, top steering head M20×1.5	12 Nm (8.9 ft·lb_f)
Screw, bottom steering head M20×1.5	60 Nm (44.3 ft·lb_f) Loctite® 243
Screw, wheel spindle, front M24×1.5	45 Nm (33.2 ft·lb_f)
Nut, wheel spindle, rear M25×1.5	90 Nm (66.4 ft·lb_f)
Spoke nipple, rear wheel M4,5	4 Nm (3.0 ft·lb_f)
Spoke nipple, front wheel M4,5	4 Nm (3.0 ft·lb_f)

23.1 Declarations of conformity

Note

The functional and equipment scope is model-dependent and may not include all wireless systems and application areas referred to.

JNS Instruments Ltd. hereby declares that the **320T1100** wireless system conforms with the relevant guidelines. The full text of the Declaration of Conformity is available at the following Internet address.

Certification website: https://www.ktm.com/320T1100

KTM AG hereby declares that the **Immo641** wireless system conforms with the relevant guidelines. The full text of the Declaration of Conformity is available at the following Internet address.

Certification website: https://www.ktm.com/immo641

23.2 Country-specific declarations of conformity

B06558-10

23 Declarations of conformity

A Technical terms

ABS	Anti-lock braking system	Safety system that prevents locking of the wheels when driving straight ahead without the influence of lateral forces
ATIR	Automatic Turn Indicator Reset	Software, which automatically switches the indicator off according to a time or travel distance counter
	Easy Shift	Engine electronics function for shifting up and down without clutch operation.
MTC	Motorcycle Traction Control	Auxiliary function of the motor control that reduces engine torque with spinning rear wheel
OBD	On-board diagnosis	Vehicle system, which monitors the specified parameters of the vehicle electronics
	Ride Husqvarna	System for wireless communication with suitable cell phones and audio devices for telephony and audio.

B Fuels

Super unleaded

Standards	
• ROZ 95	→ DIN EN 228

Fuel additive

Recommended supplier
MOTOREX®
• FUEL STABILIZER

C Operating supplies

Off-road chain spray

Recommended supplier	
MOTOREX® • CHAINLUBE OFF ROAD	

Fork oil

Order details	
• 48601166S1	
Standards	
• SAE 4	→ SAE

Universal oil spray

Recommended supplier	
MOTOREX® • JOKER 440 SYNTHETIC	

Copper paste

Long-life grease

Recommended supplier	
MOTOREX® • Bike Grease 2000	

engine oil

Recommended supplier	
MOTOREX® • POWER SYNT 4T	
Standards	
→ JASO T903 MA2	
• SAE 10W/50	→ SAE
Properties	
• fully synthetic	

Shock absorber oil

Order details	
• 50180751S1	
Standards	
• SAE 2.5	→ SAE

Brake fluid DOT 5.1

Recommended supplier
MOTOREX® • BRAKE FLUID DOT 5.1
Standards
→ DOT

Coolant

Recommended supplier	
MOTOREX® • COOLANT M3.0	
Properties	
• Antifreeze protection to at least	−25 °C (−13.0 °F)

D Electrics

12 V battery (YTZ10S)

Product code	
• YTZ10S	
Properties	
• Battery voltage	12 V
• Nominal capacity	8.6 Ah
• Maintenance-free	

Turn signal (LED)

Product code
• LED

Brake/tail light (LED)

Product code
• LED

License plate lighting (LED)

Product code
• LED

Dashboard illumination and indicator lights (LED)

Product code
• LED

Parking light (LED)

Product code
• LED

Headlight (LED)

Product code
• LED

Fuse (75011088010)

Product code

- 75011088010

Properties

- 10 A

Fuse (75011088015)

Product code

- 75011088015

Properties

- 15 A

Fuse (75011088025)

Product code

- 75011088025

Properties

- 25 A

Fuse (58011109130)

Product code

- 58011109130

Properties

- 30 A

E Cleaning agents

Shine spray with beading effect

Recommended supplier

MOTOREX®
- MOTO SHINE MS1

Chain cleaner

Recommended supplier

MOTOREX®
- CHAIN CLEAN

Preserving materials

Recommended supplier

MOTOREX®
- MOTO PROTECT

Cleaning agents for plastics, glass, lacquers, metals, windshields and visors

Recommended supplier

MOTOREX®
- QUICK CLEANER

Environmentally neutral universal cleaning agent

Recommended supplier

MOTOREX®
- MOTO CLEAN UNIVERSAL

F Icons

F.1 Symbol colors

F.1.1 Red symbols

Red symbols indicate a fault status that requires immediate intervention.

	Coolant temperature indicator lamp lights up red

F.1.2 Yellow and orange symbols

Yellow and orange symbols indicate a malfunction status that requires prompt intervention. Active driving aids are also represented by yellow or orange symbols.

	The ABS warning lamp lights up yellow
	The ABS rear warning light lights up yellow
	The fuel level warning lamp lights up yellow
	The **OBD** failure indicator light lights up yellow.
	TC indicator lamp lights up/flashes yellow
	The cruise control system indicator lamp (optional) lights up yellow
	General warning light lights up yellow

F.1.3 Green and blue symbols

Green and blue symbols convey information.

	The high beam indicator lamp lights up blue
	Coolant temperature indicator lamp lights up blue
	The turn signal indicator light flashes green with a steady blinking interval
	The cruise control system indicator lamp (optional) lights up green
	The idle indicator lamp lights up green

1

12 V battery
- charging 129
- installation 128
- removing 128

A

ABS 107
ABS button 26

ABS fuses
- changing 132

ACC1
- front 137

ACC2
- front 137

Accessories 17

Air filter
- installation 98
- removing 97

Anti-lock braking system 107
Auxiliary substances 17

B

Brake discs
- checking 109

Brake fluid
- adding front brake 110
- adding to rear brake 115

Brake fluid level
- checking on front brake 109
- checking on rear brake 115

Brake lining retainers
- checking on front brake 111
- checking on rear brake 116

Brake pad
- checking on front brake 111

Brake pads
- changing on the rear brake 117
- checking on rear brake 116
- of the front brake, changing 112

Brake pedal 27
- adjusting the basic position 114
- checking the free travel 113

Brakes 79
Braking 79

Breakdown
- towing 81

C

Chain
- checking 101
- cleaning 99
- dirt, checking for 99

Chain guide
- adjusting 104
- checking 101

Chain tension
- adjusting 100
- checking 100

Clothing 12

Clutch
- checking/correcting fluid level 105

Clutch lever 23
- adjusting the basic position 105

Combination instrument
- **ABS** 44
- audio 54
- Cruise control system (optional) 39
- **Display Mode** 47
- **Easy Shift** (optional) 46
- **Favorites** display 37
- **MTC** (optional) 45
- **MTC+MSR** (optional) 45
- Target speed 40
- time 35

Conditions of use
- use in difficult conditions 17

Coolant
- antifreeze and coolant level, checking 139
- changing 143
- draining 141
- level, checking 140

Cooling system 139
- filling/bleeding 142

Cornering MTC 78, 146
Customer service 18

D

Dashboard
- ambient air temperature indicator 36
- **Bluetooth** 60
- **Call** display 38
- **Clock format** 66
- connectivity 59
- coolant temperature display 36
- **Date format** 66

Distance 67
Extra Functions 69
favorites 53, 58
headset pairing 61
Heated Grips (optional) 55
Heating (optional) 69
info 50
Language 68
last Destination 52
Low Fuel Trip Meter 49
Navigation display (optional) 37
pairing a phone 60
point of Interest 53
Rally Favoriten (optional) 59
Remote Control Mode (optional) 38
Ride Mode 146
Ride-Mode display 35
Shift Light 62
skip Waypoint 52
slip adjustment (optional) 147
stop Navigation 54
Temperature 68
Throttle Response (optional) 147
Trip 1 48
Trip 2 49
Type of audio device 62
volume 51
Warning 50
warnings 31

Date
adjusting 64

Declarations of conformity 175
country-specific 175

Defined use 14
Diagnostic connector 138
Difficult operating conditions 17, 72

E

Easy Shift 78
Electric starter 25

Engine
running in 71

Engine number 21

Engine oil
adding 152
changing 149

Engine oil level
checking 149

Environment 13

F

Figures 17

Fork 85
Bleeding the fork legs 93
cleaning the dust boots 91
compression damping, adjusting 85
offset 85
rebound, adjusting 86

Fork protector
installation 92
removing 92

Front fender
installation 97
removing 97

Front sprocket
checking 101

Front wheel
installing 120
removing 119

Fuel tank cap
closing 29
opening 28

Fuse
of the individual electrical power consumers, changing 133

G

Gear shift lever 27
adjusting the basic position 148
checking the basic position 148

H

Hand brake lever 23
adjusting the basic position 108

Hand grip
checking 104

Handlebar position 88
adjusting 89

Headlight
adjusting headlight range 137
setting, checking 136

Horn button 23

I

Ignition lock 25
Implied warranty 17
Improper use 14

Installing the headlight with the headlight mask
installation 135

Intended use 14

K

Kill switch 25

L

Light switch 24
Loading the vehicle 71
Luggage 71

M

Main fuse
changing 131
Manufacturer's warranty 17
Motorcycle
cleaning 153
lifting gear at rear, raising with 90
raising with lift stand 90
removing from lift stand 91
removing the rear from the lifting gear 90
Motorcycle traction control 78, 146

O

Oil filter
changing 149
Oil screens
cleaning 149
On-board tool kit
removing 94
storing 95
Owner's manual 13

P

Parking 80
Passenger footpegs 26
Passenger strap 26
Preparing for use
after storage 157
checks and maintenance measures when preparing for use 73
Notes on preparing for first use 70
Protective clothing 12

R

Rear hub damping rubbers
checking 124
Rear sprocket
checking 101
Rear wheel
installation 122
removing 121
Refueling
fuel 81
Removing the headlight with the headlight mask
removing 135
Resources 17
Riding 75
Starting off 75

S

Safe use 12
Seat
mounting 94
removing 93
unlocking 26
Service 17
Shifting 75
Shock absorber 85
adjusting the high-speed compression damping 87
adjusting the low-speed compression damping 87
adjusting the rebound damping 88
compression damping, general 86
Side fairing
mounting 96
removing 96
Side stand 28
Skid plate
installation 106
removing 106
spare parts 17
Spoke tension
checking 126
Starting 73
Steering lock 25
Stopping 80
Storage 156

T

Tampering 12
Throttle twist grip 23
Time
adjusting 64
Tire condition
checking 124
Tire pressure
checking 126

Tire repair spray
use 127
towing 81
Transport 80
Triple clamp offset 85
Turn signal switch 24

U

USB
USB socket 137
USB socket 137

V

Vehicle identification number 21
VIN 21

W

Winter operation
checks and maintenance steps 154
Work rules 13

3402911en

06/10/2026

Husqvarna Mobility GmbH
Stallhofnerstraße 3 | 5230 Mattighofen