OWNER'S MANUAL 2027

READY TO RACE

250 SX-F
250 XC-F

ITEM NO.: 3240381EN

KTM

Dear KTM customer,

Congratulations on your decision to purchase a KTM motorcycle. You are now the owner of a state-of-the-art sports vehicle which, with proper care, will bring you pleasure for a long time to come.

We hope you enjoy your bike and have a safe journey at all times!

You can enter the serial numbers of your vehicle below to find the serial numbers more quickly if required:

Vehicle identification number (p. 17)	Stamp of the contractual partner
Engine number (p. 17)	

The owner's manual contained the latest information for this model series at the time of publication. However, minor differences due to further developments in design cannot be ruled out completely.
All specifications are non-binding. KTM Sportmotorcycle GmbH specifically reserves the right to modify or delete technical specifications, prices, colors, forms, materials, services, designs, equipment, etc., without prior notice and without specifying reasons, to adapt these to local conditions, as well as to stop production of a particular model without prior notice. KTM Sportmotorcycle accepts no liability for delivery options, deviations from figures and descriptions, as well as misprints and other errors. The models portrayed partly contain special equipment that does not belong to the regular scope of supply.

© 2026 KTM Sportmotorcycle GmbH, Mattighofen Austria
All rights reserved. Figures: Mitterbauer / Visus Studios / KISKA / KTM
Written permission from the copyright owner is required before any duplication or reproduction.

ISO 9001

KTM applies quality assurance processes that lead to the highest possible product quality as defined in the ISO 9001 international quality management standard.

12 100 6061

REG.NO. 12 100 6061

Issuing institution:
TÜV SÜD Management Service GmbH

KTM Sportmotorcycle GmbH
Stallhofnerstraße 3
5230 Mattighofen, Austria

This document is valid for:
250 SX–F EU (F8101527)
250 SX–F US (F8175527)
250 SX–F BR (F8140527)
250 XC–F US (F8175027)

3240381en

20/07/2026

Table of contents

1 Means of representation 9

1.1 Conventions..... 9
1.1.1 Icons 9
1.1.2 Formatting 9
1.1.3 Abbreviations 9

2 Safety 10

2.1 Safety instructions 10
2.2 Ban on tampering 10
2.3 Safe use 11
2.4 Protective clothing 11
2.5 Work rules 11
2.6 Environment 12
2.7 Owner's manual 12
2.8 Use definition – intended use 12
2.9 Improper use 13

3 Important notes 14

3.1 Manufacturer's warranty, implied warranty 14
3.2 Auxiliary material, operating material 14
3.3 Spare parts, accessories 14
3.4 Service 14
3.5 Figures 14
3.6 Customer service 14

4 View of the vehicle 15

4.1 View of vehicle, front left (example) 15
4.2 View of vehicle, rear right (example) 16

5 Serial number 17

5.1 Vehicle identification number 17
5.2 Frame label 17
5.3 Engine number 17
5.4 Fork part number 17
5.5 Shock absorber part number 18

6 Controls 19

6.1 Clutch lever 19
6.2 Handbrake lever 19
6.3 Throttle grip 20
6.4 Kill button 20
6.5 Electric starter 21
6.6 Combination switch 21
6.7 Overview of indicator lights **(SX-F models)** 22
6.8 Overview of indicator lights **(XC–F)** 22
6.9 dashboard 23
6.10 Opening the fuel tank cap 23
6.11 Closing the fuel tank cap 24
6.12 Cold start button 25
6.13 Idle speed adjustment screw 25
6.14 Gear shift lever 26
6.15 Brake pedal 26
6.16 Plug-in stand **(SX-F models)** 27
6.17 Side stand **(XC–F)** 27

7 Preparing for use 28

7.1 Notes on preparing for first use 28
7.2 Running in the engine 29
7.3 Starting performance of lithium-ion batteries at low temperatures 30
7.4 Preparing the vehicle for difficult operating conditions 30
7.5 Preparing the vehicle for rides on dry sand 30
7.6 Preparing the vehicle for rides on wet sand 31
7.7 Preparing for rides on wet and muddy surfaces 32
7.8 Preparing vehicle for rides at high temperature or slow speed 32
7.9 Preparing the vehicle for low temperatures or snow 32

8 Riding instructions 33

8.1 Checks and maintenance measures when preparing for use 33
8.2 Starting the vehicle 33
8.3 Activating launch control 34
8.4 Activating traction control 35
8.5 Starting off 35
8.6 Quickshifter 36
8.7 Activate the quickshifter 36
8.8 Shifting, riding 36
8.9 Braking 37
8.10 Stop, park 38
8.11 Transportation 39
8.12 Refueling 40

9 Service schedule 42

9.1 Service schedule 42

10 Tuning the chassis 45

10.1 Checking the basic chassis setting with the rider's weight 45
10.2 Air suspension **XACT (SX-F models)** 45
10.3 Compression damping of the shock absorber 46
10.4 Adjusting the low-speed compression damping of the shock absorber 46

10.5 Adjusting the high-speed compression damping of the shock absorber ... 47
10.6 Adjusting the rebound damping of the shock absorber ... 48
10.7 Measuring the dimension of the unloaded rear wheel ... 49
10.8 Checking the static sag of the shock absorber ... 50
10.9 Checking the rider sag of the shock absorber ... 50
10.10 Adjusting the preload for the shock absorber ... 51
10.11 Adjusting the rider sag ... 52
10.12 Checking the basic setting of the fork ... 54
10.13 Adjusting the fork air pressure **(SX-F models)** ... 54
10.14 Adjusting the compression damping of the fork ... 55
10.15 Adjusting the rebound damping of the fork ... 56
10.16 Handlebar position ... 58
10.17 Adjusting the handlebar position ... 58

11 Service work on the chassis ... 61

11.1 Raising the motorcycle with a lift stand ... 61
11.2 Removing the motorcycle from the lift stand ... 61
11.3 Bleeding the fork legs ... 62
11.4 Cleaning the dust boots of the fork legs ... 63
11.5 Removing the fork protector ... 63
11.6 Installing the fork protector ... 64
11.7 Removing the skid plate **(XC–F)** ... 64
11.8 Installing the skid plate **(XC–F)** ... 65
11.9 Removing the frame protector ... 65
11.10 Installing the frame protector ... 65
11.11 Removing the fork legs ... 66
11.12 Installing the fork legs ... 66
11.13 Removing the lower triple clamp ... 67
11.14 Installing the lower triple clamp ... 68
11.15 Checking the steering head bearing play ... 71
11.16 Adjusting the steering head bearing play ... 72
11.17 Lubricating the steering head bearing ... 72
11.18 Removing the number plate ... 73
11.19 Mounting the number plate ... 73
11.20 Removing the front top fender ... 73
11.21 Installing the front top fender ... 74
11.22 Removing the shock absorber ... 74
11.23 Installing the shock absorber ... 76
11.24 Removing the seat ... 77
11.25 Mounting the seat ... 78
11.26 Removing air filter box cover ... 78
11.27 Installing air filter box cover ... 79
11.28 Removing the air filter ... 80
11.29 Cleaning the air filter and air filter box ... 81
11.30 Installing the air filter ... 82
11.31 Preparing the air filter box cover for securing ... 82
11.32 Removing the muffler ... 83
11.33 Installing muffler ... 83
11.34 Changing the damping material on the main silencer ... 84
11.35 Removing the fuel tank ... 84
11.36 Installing the fuel tank ... 86
11.37 Checking the chain for dirt ... 88
11.38 Cleaning the chain ... 88
11.39 Checking the chain tension ... 89
11.40 Adjusting the chain tension ... 89
11.41 Checking the chain, rear sprocket, front sprocket, and chain guide ... 90
11.42 Checking the frame ... 93
11.43 Checking the swingarm ... 93
11.44 Checking the throttle cable routing ... 93
11.45 Checking the rubber grips ... 94
11.46 Program the Quickshifter ... 95
11.47 Adjusting the basic position of the clutch lever ... 95
11.48 Checking/correcting the fluid level of hydraulic clutch ... 95
11.49 Changing the hydraulic clutch fluid ... 96

12 Brake system ... 98

12.1 Checking the free travel on the hand brake lever ... 98
12.2 Adjusting the basic position of the hand brake lever ... 98
12.3 Checking the brake discs ... 98
12.4 Checking the brake fluid level for the front brake ... 99
12.5 Adding brake fluid for the front brake ... 100
12.6 Checking that the brake pads of the front brake are secured ... 101

12.7 Changing the brake pads of the front brake 102
12.8 Checking the free travel of the brake pedal 104
12.9 Adjusting the basic position of the brake pedal 104
12.10 Checking the brake fluid level for the rear brake 105
12.11 Adding brake fluid for the rear brake 106
12.12 Checking that the brake pads of the rear brake are secured 107
12.13 Changing the rear brake pads 107

13 Wheels, tires 110

13.1 Removing the front wheel 110
13.2 Installing the front wheel 111
13.3 Removing the rear wheel 111
13.4 Installing the rear wheel 112
13.5 Checking the tire condition 113
13.6 Checking the tire pressure 114
13.7 Checking the spoke tension 115

14 Electrics 116

14.1 Removing the 12 V battery 116
14.2 Installing the 12 V battery 117
14.3 Charging the 12 V battery 118
14.4 Changing the main fuse 121
14.5 Changing the fuse of the fuel pump 122
14.6 Diagnostic connector 123

15 Cooling system 124

15.1 Cooling system 124
15.2 Checking the frost protection and coolant level 124
15.3 Checking the coolant level 125
15.4 Draining the coolant 126
15.5 Refilling the coolant 126
15.6 Changing the coolant 127

16 Tuning the engine 129

16.1 Checking the play in the throttle cable 129
16.2 Adjusting the throttle cable play 129
16.3 Adjusting the characteristic map of the throttle response 130
16.4 Changing the mapping 132
16.5 adjusting the idle speed 132
16.6 Programming the throttle valve position 133
16.7 Checking the basic position of the gear shift lever 134
16.8 Adjusting the basic position of the gear shift lever 134

17 Service work on the engine 136

17.1 Changing the fuel screen 136
17.2 Checking the engine oil level 137
17.3 Changing the engine oil and oil filter, cleaning the oil screen 138
17.4 Adding engine oil 140

18 Cleaning, care 142

18.1 Cleaning the motorcycle 142

19 Storage 144

19.1 Storage 144
19.2 Preparing for use after storage 145

20 Troubleshooting 146

20.1 troubleshooting 146

21 Flash codes 148

21.1 Flash codes 148

22 Technical specifications 151

22.1 Engine 151
22.1.1 Technical data - engine 151
22.1.2 Capacities - engine 152
22.2 Chassis 152
22.2.1 Technical data - chassis 152
22.2.2 Technical data - tires 153
22.2.3 fuel 154
22.3 Electrics 154
22.3.1 Electrics 154
22.3.2 Fuses 154
22.3.3 Lamps 154
22.4 Fork 155
22.4.1 Technical data **(All SX-F except US)** 155
22.4.2 Capacities **(All SX-F except US)** 155
22.4.3 Technical data **(SX-F US)** 155
22.4.4 Capacities **(SX-F US)** 156
22.4.5 Technical data **(XC–F)** 156
22.4.6 Capacities **(XC–F)** 157
22.5 Shock absorber 157
22.5.1 Technical data **(All SX-F except US)** 157
22.5.2 Capacities **(All SX-F except US)** 158
22.5.3 Technical data **(SX-F US)** 158

22.5.4 Capacities **(SX-F US)** 159
22.5.5 Technical data **(XC–F)** 159
22.5.6 Capacities **(XC–F)** 160
22.6 Tightening torque 160
22.6.1 Engine tightening torques 160
22.6.2 Chassis tightening torques 163

23 Relevant documents 167

23.1 Declaration of conformity 167
23.2 Declaration of conformity (UK) 169

24 Recycling 171

24.1 Recycling 171

Notes 173

A Technical terms 173

B Fuels 174

C Operating supplies 175

D Electrics 177

E Cleaning agents 178

F Icons 179

F.1 List of symbols 179
F.1.1 Yellow and orange symbols 179
F.1.2 Green and blue symbols 179
F.1.3 White symbols 179

Index 180

1.1 Conventions

1.1.1 Icons

✓	Indicates a desired result (e.g. of a work step or a function).
✗	Indicates an undesired result (e.g. of a work step or a function).
	All work marked with this symbol requires specialist knowledge and technical understanding. Ensure that this work is carried out or supervised by trained personnel from an authorized contractual partner, and that any special tools required are used.
	Indicates a page reference.
	Indicates information with more details.
	Indicates a tip, e.g. to simplify work.
»	Indicates the result from a test step.
◀	Indicates the end of an activity, including any rework.

1.1.2 Formatting

Proprietary name	Indicates a proprietary name.
Name ®	Indicates a protected name.
Brand ™	Indicates a brand available on the open market.
Underlined terms	Refer to technical details of the vehicle or indicate technical terms that are explained in the glossary.

1.1.3 Abbreviations

2–pc.	two-part
Part no.	Part number
or	respectively
approx.	circa
etc.	et cetera
poss.	possibly/possible
if necessary	if necessary
cmpl.	complete
min.	at least
no.	number
no fig.	no figure
s.	see
among others	among others/not limited to
and the like	and the like
etc.	et cetera
cf.	compare
e.g.	for example

2.1 Safety instructions

Function of the safety instruction

Safety instruction brings attention to dangers when handling the product. Hazards are classified, named, described, and supplemented with information on how to avoid them.

- If there is a safety instruction before a list of instructions, the danger exists throughout the entire activity.
- If there is a safety instruction immediately before an instruction, the next step presents a danger.

Safety instruction layout

All safety instructions are identified by a signal word and a warning symbol. The combination of signal word and warning symbol determines the degree of danger.

DANGER
Indicates an imminent danger that leads to serious injury or death.

WARNING
Indicates a potentially imminent danger that could lead to serious injury or death.

CAUTION
Indicates a potentially imminent danger that can lead to minor or slight injuries.

NOTE
Indicates a situation that can lead to damage to the product or the product environment.

NOTE
Indicates a situation that can lead to environmental damage.

2.2 Ban on tampering

No changes may be made to the noise control equipment and components.

Tampering that is prohibited

- Removing or disabling any devices or components used for noise control before the new vehicle is sold or delivered to the end customer.
- Removing or disabling any device or component used for noise control for purposes other than service, repair, or replacement during the service life of the vehicle.
- Use of the vehicle after a device or component used for noise control has been removed, disabled, or inadequately maintained.

Examples of prohibited tampering

- Removing or drilling through rear mufflers, baffle plates, manifolds, or other components that conduct exhaust gases.
- Removing or puncturing parts of the intake system.
- Replacing moving parts of the vehicle, or parts of the exhaust system or intake system, with parts other than those specified by the manufacturer.

2.3 Safe use

DANGER

Danger of accidents A rider who is not fit to ride poses a danger to themself and to others.

- Do not operate the vehicle if you are not fit to ride due to alcohol, drugs, or medication.
- Do not operate the vehicle if you are physically or mentally incapable of doing so.

DANGER

Danger of poisoning Exhaust gases are toxic and inhaling them may result in unconsciousness and death.

- Always ensure that there is sufficient ventilation when running the engine.
- Use suitable exhaust extraction when starting or running the engine in an enclosed space.

WARNING

Danger of burns Some vehicle components become hot when the vehicle is operated.

- Do not touch any parts such as the exhaust system, radiator, engine, damper, or brake system before the vehicle parts have cooled down.
- Allow the vehicle parts to cool down before performing any work on the vehicle.

The vehicle should only be used when it is in perfect technical condition, for its intended purpose, and in a safe and environmentally-friendly manner.

The vehicle must only be used by trained persons.

Have any faults that impair safety immediately remedied by an authorized contractual partner.

Observe the information and warning stickers on the vehicle.

2.4 Protective clothing

WARNING

Risk of injury Missing or inadequate protective clothing increases the risk of injury.

- Wear appropriate protective clothing such as helmet, boots, gloves as well as pants and a jacket with protectors on all rides.
- Always wear protective clothing that is in good condition and meets the legal regulations.

2.5 Work rules

Unless specified otherwise, the ignition must be switched off during all work (models with ignition lock, models with transponder key) or the engine must be at a standstill (models without ignition lock or transponder key).

Special tools are required for some work. The tools are not part of the vehicle, but can be ordered using the number in parentheses. Example: bearing puller (15112017000)

Unless otherwise noted, normal conditions apply to all tasks and descriptions.

Ambient temperature	20 °C (68.0 °F)
Ambient air pressure	1,013 mbar (14.69 psi)
Relative air humidity	60 ±5 %

During assembly, use new parts to replace parts which cannot be reused (e.g. self-locking screws and nuts, expansion screws, seals, sealing rings, O-rings, pins, and lock washers).

A thread lock (e.g. **Loctite®**) is required for some screw connections. Observe the manufacturer's specific instructions for use.

If thread lock (e.g. **Precote®**) has already been applied to a new part, do not apply any additional thread lock.

After disassembly, clean the parts that are to be reused and check them for damage and wear. Replace damaged or worn parts.

After completing a repair or service, check the operating safety of the vehicle.

2.6 Environment

Handling the vehicle responsibly reduces the risk of conflict with other road users and the surrounding area. The future of motorcycling also depends on using motorcycles legally, being environmentally conscious and respecting the rights of others.

When disposing of used oil, other operating and auxiliary fluids, and used components, the laws and regulations of the respective country must be observed.

As motorcycles are not subject to the EU regulations governing the disposal of end-of-life vehicles, there are no legal regulations that pertain to the disposal of an end-of-life motorcycle. More information is available from the authorized contractual partner.

2.7 Owner's manual

Read this owner's manual carefully and in full before riding off for the first time. The owner's manual contains information and tips on how to operate, handle, and service your vehicle, as well as advice on optimum tuning and how to avoid injuries.

Tip

Save this owner's manual on your smartphone, for example, so that you can access it at any time.

An authorized contractual partner will be happy to assist you if you are unsure.

The owner's manual is an important component of the vehicle. If the vehicle is sold, the owner's manual must be downloaded again by the new owner.

The owner's manual can be downloaded multiple times using the QR code or the link on the delivery certificate.

The owner's manual is also available for download from your authorized contractual partner and on the KTM website.

International KTM Website: https://www.ktm.com

A printed copy can be ordered from the following address.

Website for printed copy: https://print.ktm.com

2.8 Use definition – intended use

(SX-F models)

This vehicle has been designed and built to withstand the typical stresses and strains of racing. This vehicle complies with the currently valid regulations and categories of the top international motorsports organizations.

Note

Only use this vehicle on designated tracks away from public roads.

(XC–F)

This vehicle has been designed and built to withstand the typical stresses and strains of racing. This vehicle complies with the currently valid regulations and categories of the top international motorsports organizations.

Note

Only use this vehicle on designated tracks away from public roads.

This vehicle is designed for use in offroad endurance competition, and not primarily for use in motocross.

2.9 Improper use

The vehicle may only be used as intended.

Improper use can result in danger to people, property and the environment.

Any use of the vehicle beyond the intended and defined use constitutes misuse.

Improper use includes the use of operating and auxiliary materials that do not meet the required specifications for the respective use.

3 Important notes

3.1 Manufacturer's warranty, implied warranty

The work prescribed in the service schedule must only be carried out by an authorized contractual partner and then confirmed in the electronic proof of service, as otherwise all warranty claims will be void. Damage or secondary damage caused by tampering with and/or conversions on the vehicle are not covered by the manufacturer's warranty.

3.2 Auxiliary material, operating material

Use operating materials and auxiliary materials in accordance with the operating instructions and specifications.

3.3 Spare parts, accessories

For safety reasons, only spare parts and accessories approved by KTM may be used. They may only be installed by an authorized contractual partner. KTM accepts no liability for other products and any resulting damage or loss.

Certain spare parts and accessory products are specified in parentheses in the descriptions. Authorized contractual partners will be happy to help.

The current **KTM PowerParts** are listed for each vehicle on the KTM website.

International KTM Website: https://www.ktm.com

3.4 Service

A prerequisite for perfect operation and prevention of premature wear is that the service, care, and tuning work on the engine and chassis is properly carried out as described in the owner's manual. An incorrect suspension setting can lead to damage and breakage of chassis components.

Use of the vehicle under arduous conditions, such as on sand or on wet, dusty and muddy surfaces, can result in significantly increased wear of components, such as the powertrain, brake system, air filter, or suspension components. For this reason, it may be necessary to inspect or replace parts before the next scheduled service interval.

Please adhere to the prescribed run-in times and service intervals at all times. Strictly adhering to this will ensure a much longer service life for your motorcycle.

The relevant mileage or time interval is whichever occurs first.

A list of services that have already been carried out on the vehicle can be found in the Service area on the international KTM website:

International KTM Website: https://www.ktm.com

Authorized contractual partners will be happy to answer any questions regarding the services performed.

A list of authorized contractual partners can be found on the KTM website.

3.5 Figures

Some of the figures in this document contain optional extras.

For clarity, some components may be shown disassembled or may not be shown at all. Disassembly is not always absolutely necessary in order to carry out the activities described. The textual information takes precedence.

3.6 Customer service

Authorized contractual partners will be happy to answer questions about the vehicle and KTM.

A list of authorized contractual partners can be found on the KTM website.

International KTM Website: https://www.ktm.com

4.1 View of vehicle, front left (example)

1. Clutch lever (p. 19)
2. Combination switch (p. 21)
3. Air filter box cover
4. Gear shift lever (p. 26)

4.2 View of vehicle, rear right (example)

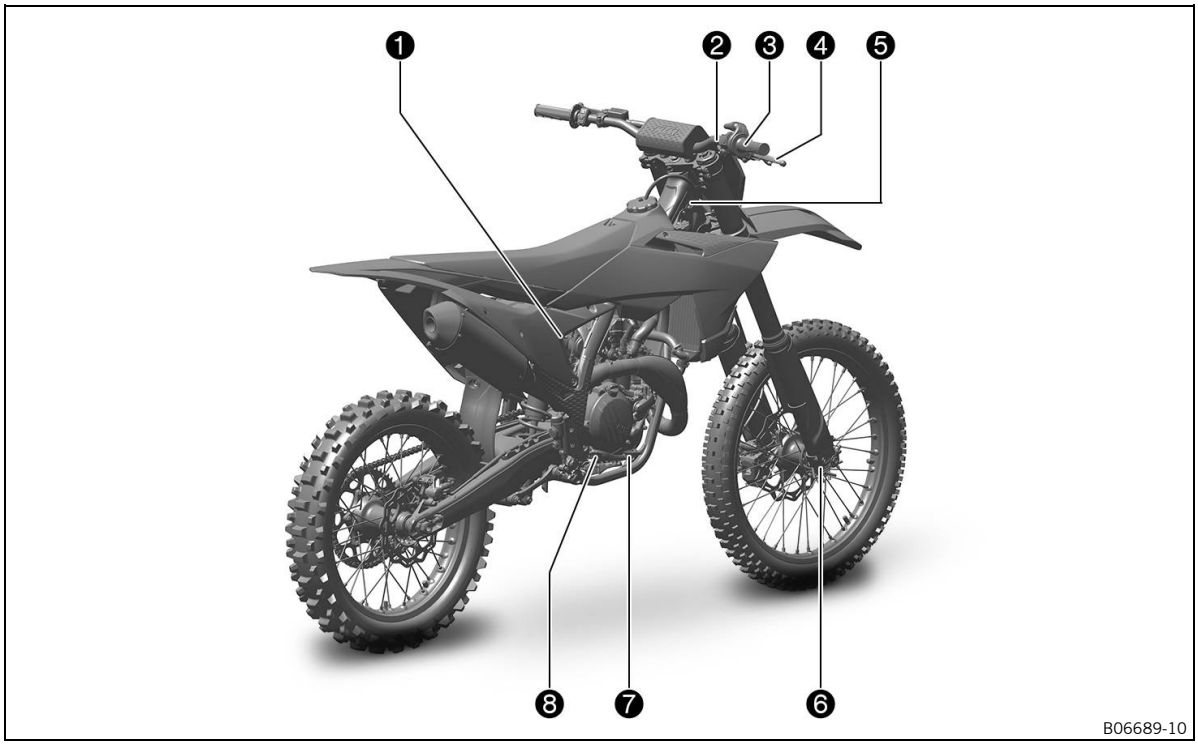

1. Shock absorber compression adjustment
2. Kill button (p. 20)
2. Electric starter (p. 21)
3. Throttle grip (p. 20)
4. Clutch lever (p. 19)
5. Vehicle identification number (p. 17)
5. Frame label (p. 17)
6. Fork rebound adjustment
7. Brake pedal (p. 26)
8. Engine oil level viewer

5.1 Vehicle identification number

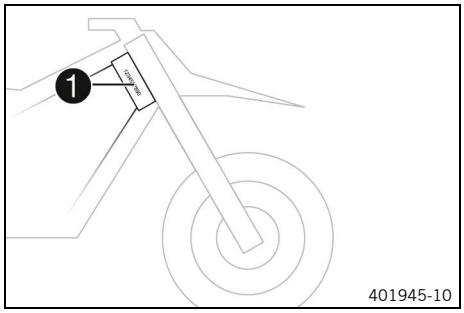

The vehicle identification number ❶ is stamped on the right-hand side of the steering head.

5.2 Frame label

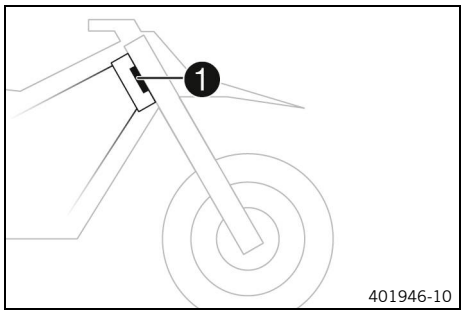

Frame label ❶ is attached to the front of the steering head.

5.3 Engine number

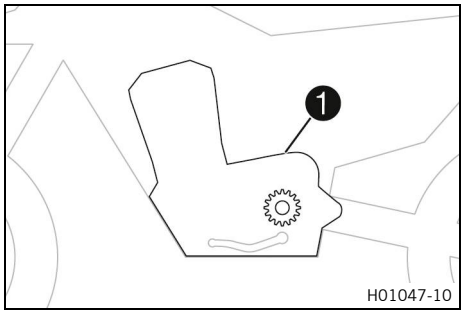

Engine number ❶ is embossed on the left side of the engine above the engine sprocket.

5.4 Fork part number

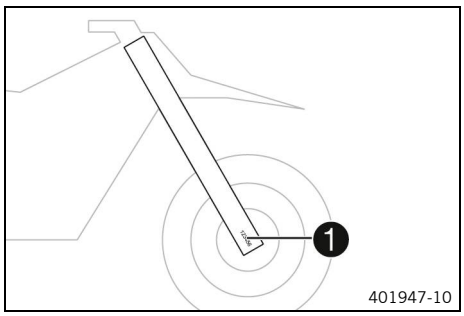

Fork part number ❶ is stamped on the inside of the fork shoe.

5.5 Shock absorber part number

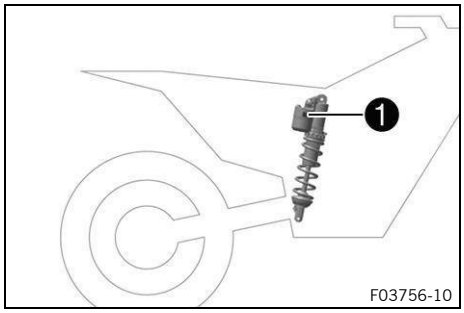

Shock absorber part number ❶ is stamped on the top right of the shock absorber.

6.1 Clutch lever

(SX-F models)

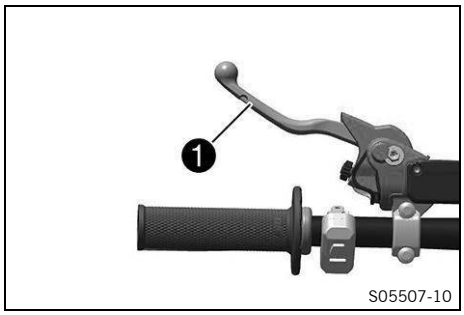

Clutch lever ❶ is fitted on the left side of the handlebar.
The clutch is activated hydraulically and adjusts itself automatically.

(XC–F)

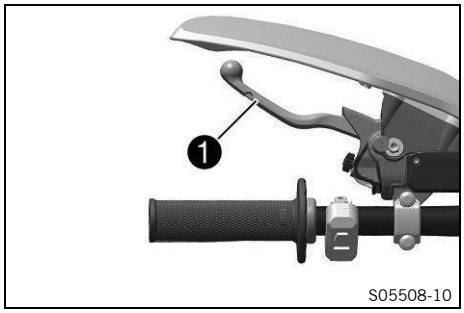

Clutch lever ❶ is fitted on the left side of the handlebar.
The clutch is activated hydraulically and adjusts itself automatically.

6.2 Handbrake lever

(SX-F models)

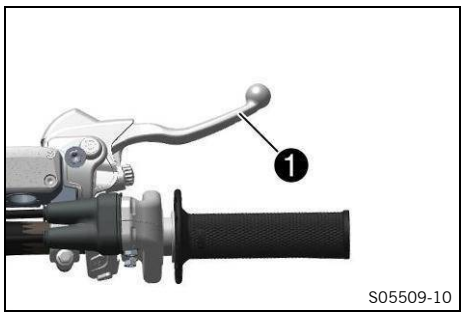

Hand brake lever ❶ is fitted on the right side of the handlebar.
The front brake is engaged using the hand brake lever.

(XC–F)

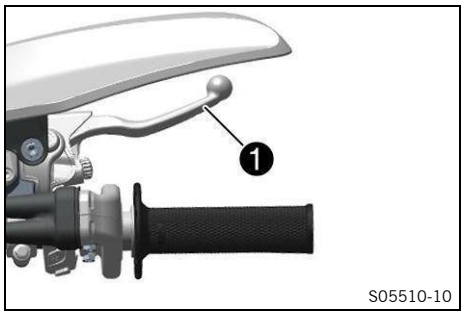

Hand brake lever ❶ is fitted on the right side of the handlebar.
The front brake is engaged using the hand brake lever.

6.3 Throttle grip

(SX-F models)

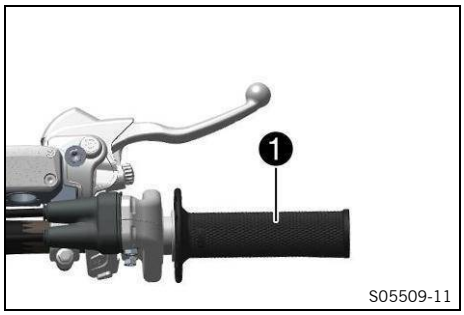

The throttle twist grip ❶ is fitted on the right side of the handlebar.

(XC–F)

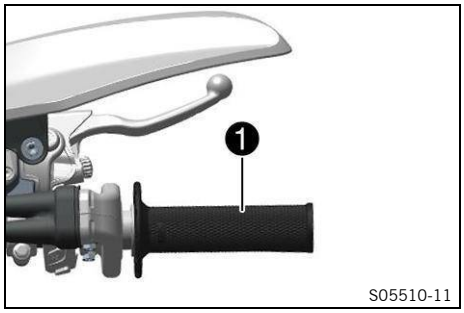

The throttle twist grip ❶ is fitted on the right side of the handlebar.

6.4 Kill button

(SX-F models)

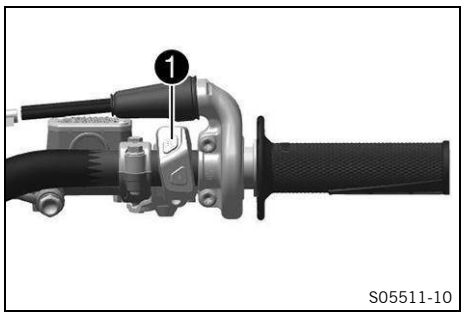

Kill switch ❶ is fitted on the right side of the handlebar.

Condition	Meaning
Kill button ⊗ is not pressed.	In this position, the ignition circuit is closed, and the engine can be started.
The kill button ⊗ is pressed and held.	In this position, the ignition circuit is interrupted, a running engine stops, and an engine at standstill will not start.

(XC–F)

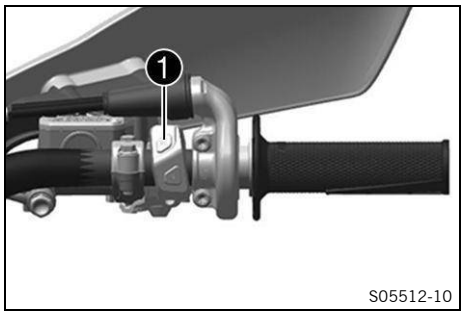

Kill switch ❶ is fitted on the right side of the handlebar.

Condition	Meaning
Kill button ⊗ is not pressed.	In this position, the ignition circuit is closed, and the engine can be started.
The kill button ⊗ is pressed and held.	In this position, the ignition circuit is interrupted, a running engine stops, and an engine at standstill will not start.

6.5 Electric starter

(SX-F models)

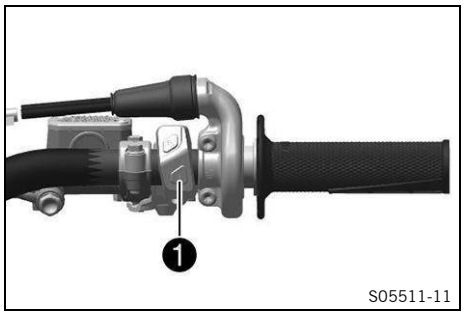

Electric starter ❶ is fitted on the right side of the handlebar.

Condition	Meaning
Electric starter in the basic position	No function
Electric starter pressed	In this position, the starter motor is actuated.

(XC–F)

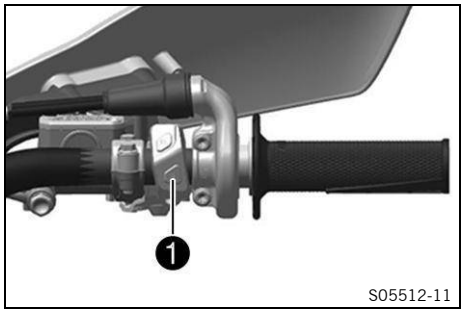

Electric starter ❶ is fitted on the right side of the handlebar.

Condition	Meaning
Electric starter in the basic position	No function
Electric starter pressed	In this position, the starter motor is actuated.

6.6 Combination switch

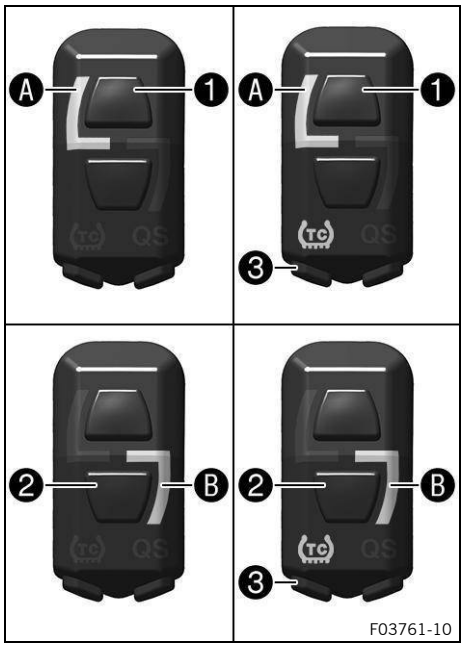

The combination switch is fitted on the left side of the handlebar.

The engine characteristic can be changed using button ❶ and button ❷ on the combination switch.

Traction control can be activated using the TC button ❸ on the combination switch.

Launch control and the **quickshifter** can also be activated using the combination switch.

Condition	Meaning
STANDARD ❶	STANDARD mapping is activated when the indicator lamp Ⓐ lights up.
STANDARD ❶ with TC	STANDARD mapping with traction control is activated when indicator lamp Ⓐ and TC indicator lamp ❸ light up.
ADVANCED ❷	ADVANCED mapping is activated when the indicator lamp Ⓑ lights up.
ADVANCED ❷ with TC	ADVANCED mapping with traction control is activated when the indicator lamp Ⓑ and the TC indicator lamp ❸ light up.

6.7 Overview of indicator lights (SX-F models)

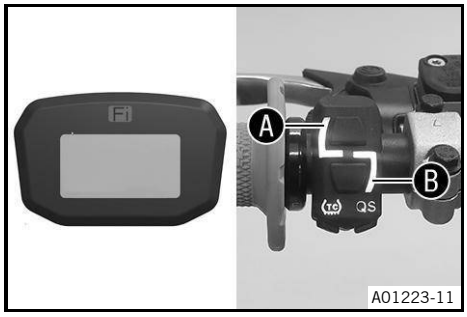

Condition		Meaning
Fi	Failure indicator lamp lights up or flashes red	The **OBD** has detected a malfunction in the vehicle electronics. Come safely to a halt, and contact an authorized contractual partner. The malfunction indicator lamp also lights up if traction control is activated and the speed limiter intervenes.
L	Indicator light Ⓐ lights up white	STANDARD mapping is activated. This mapping is recommended for firm/hard surfaces.
⌉	Indicator light Ⓑ lights up green	ADVANCED mapping is activated. This mapping is recommended for sandy/loose surfaces.
TC	TC indicator light lights up/flashes orange	**TC** is enabled or is currently intervening. The TC indicator lamp flashes if **launch control** is activated.
QS	QS indicator light lights up/flashes blue	The **Quickshifter** is activated. The QS indicator light flashes when the **Quickshifter** is being programmed.

6.8 Overview of indicator lights (XC–F)

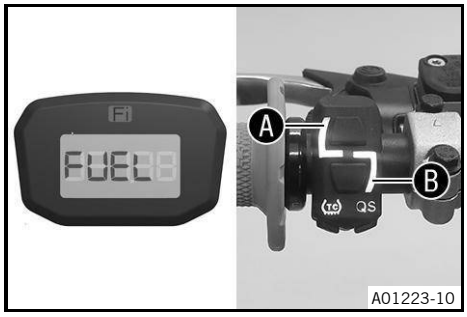

Condition		Meaning
Fi	Failure indicator lamp lights up or flashes red	The **OBD** has detected a malfunction in the vehicle electronics. Come safely to a halt, and contact an authorized dealer. The malfunction indicator lamp also lights up if traction control is activated and the speed limiter intervenes.
L	Indicator light Ⓐ lights up white	STANDARD mapping is activated. This mapping is recommended for firm/hard surfaces.
⌉	Indicator light Ⓑ lights up green	ADVANCED mapping is activated. This mapping is recommended for sandy/loose surfaces.

Condition		Meaning
FUEL	**FUEL** is displayed	The fuel level has reached the reserve mark.
TC	TC indicator light lights up/flashes orange	**TC** is enabled or is currently intervening. The TC indicator lamp flashes if **launch control** is activated.
QS	QS indicator light lights up/flashes blue	**Quickshifter** is activated. The QS indicator light flashes when the **Quickshifter** is being programmed.

6.9 dashboard

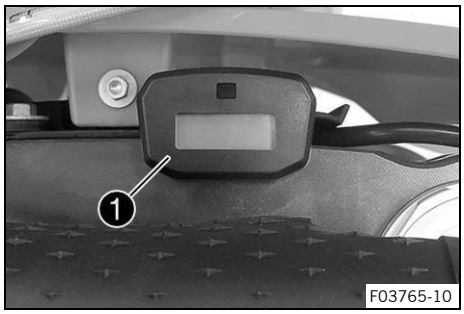

Dashboard ❶ is fitted in the front of the handlebar.
The dashboard shows the total operating hours of the engine.
The operating hours are counted when the engine is started and stopped when the engine is switched off.

Note
Nothing can be cleared or modified on the dashboard.
As soon as the diagnostics tool is connected, the hourmeter starts running.
Before longer diagnostic sessions, unplug the hourmeter behind the number plate.

6.10 Opening the fuel tank cap

DANGER
Fire hazard Fuel is highly flammable.
The fuel in the fuel tank expands when warm and can escape if overfilled.
- Do not refuel the vehicle in the vicinity of open flames, glowing, or smoldering objects.
- Make sure that nobody smokes in the vicinity of the vehicle during the refueling process.
- Switch off the engine for refueling.
- Make sure that no fuel is spilled; particularly not on hot parts of the vehicle.
- If any fuel is spilled, wipe it up immediately.
- Do not overfill the fuel tank.

WARNING
Danger of poisoning Fuel is harmful to health.
- Do not allow fuel to come into contact with skin, eyes, or clothing.
- Consult a doctor immediately if fuel has been ingested.
- Do not inhale fuel vapors.
- Rinse the affected area immediately with plenty of water in the event of contact with skin.
- Rinse eyes thoroughly with water and consult a doctor immediately if fuel comes into contact with eyes.
- If fuel spills on to your clothing, change the clothing.
- Store fuel properly in a suitable container and keep out of the reach of children.

NOTE
Environmental hazard Improper handling of fuel is dangerous to the environment.
- Do not allow fuel to enter the groundwater, the soil, or the sewage system.

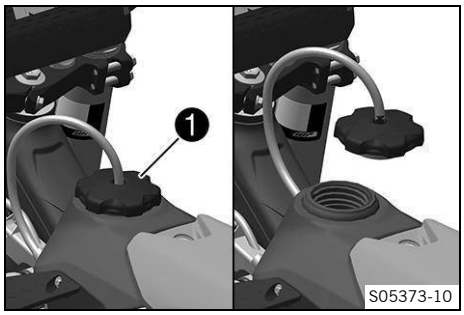

(SX-F EU and US)

– Turn fuel tank cap ❶ counterclockwise and lift it off.

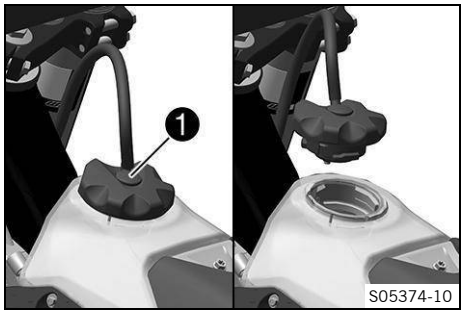

(BR)

– Press release button ❶, turn the fuel tank cap counter-clockwise, and lift it off.

6.11 Closing the fuel tank cap

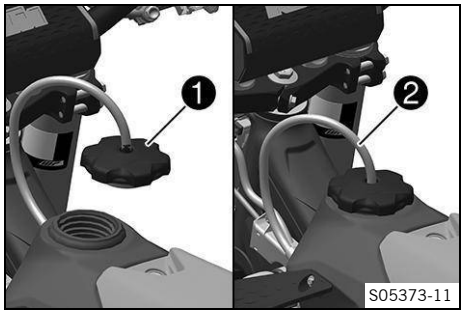

(SX-F EU and US)

– Mount fuel tank cap ❶ and turn it clockwise until the fuel tank is tightly closed.

Route hose of fuel tank vent ❷ without kinks.

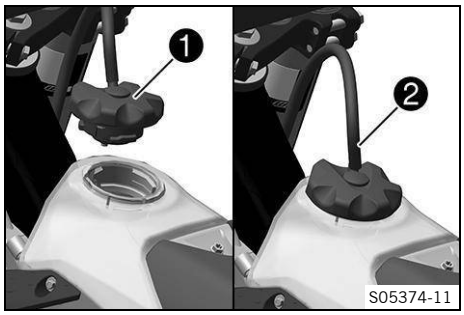

(BR)

– Mount filler cap ❶ and turn it clockwise until the release button engages.

Route hose of fuel tank vent ❷ without kinks.

6.12 Cold start button

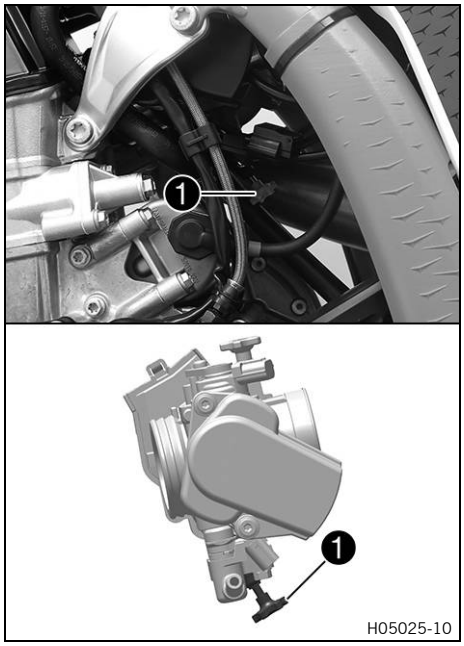

Cold start button ❶ is fitted to the bottom of the throttle body.

The electronic fuel injection extends the injection time when the engine is cold and the ambient temperature is low. To help the engine burn the increased amount of fuel, it must be supplied with additional oxygen by pushing the cold start button.

After briefly opening up the throttle and then releasing the throttle twist grip again, or turning the throttle twist grip towards the front, the cold start button returns to its original position.

Note

Check whether the cold start button has returned to its basic position.

Condition	Meaning
The cold start button is pushed in all the way to the stop.	Cold start button activated
The cold start button is in the basic position.	Cold start button deactivated

6.13 Idle speed adjustment screw

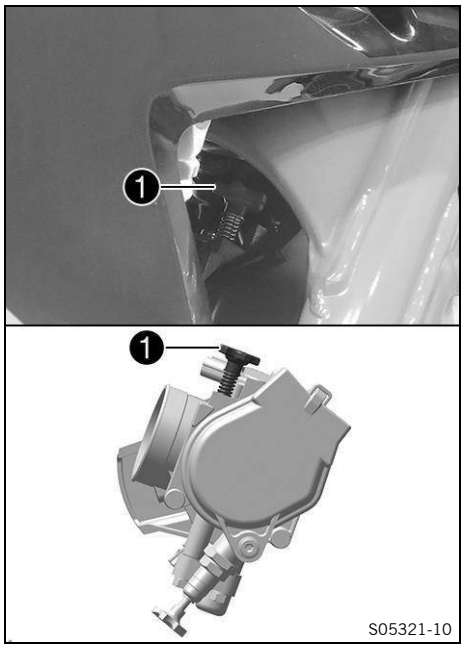

The idle setting of the throttle body substantially influences the vehicle's starting behavior, a stable idle speed, and the vehicle's response when the throttle is opened.

An engine with a correctly set idle speed is easier to start than an engine with the idle speed set incorrectly.

The idle speed is adjusted using idle speed adjustment screw ❶.

Increase the idle speed by turning the idle speed adjustment screw clockwise.

Decrease the idle speed by turning the idle speed adjustment screw counterclockwise.

6.14 Gear shift lever

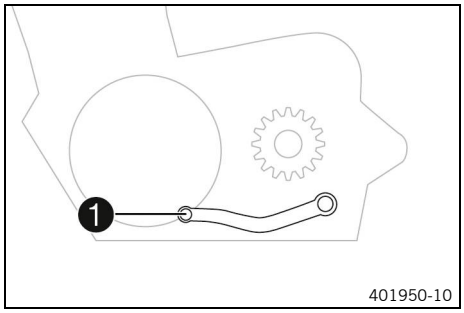

Gear shift lever ❶ is mounted on the left of the engine.

(SX-F models)

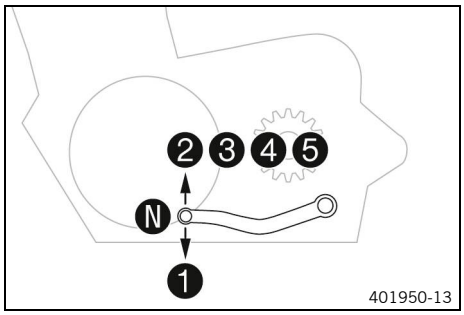

The gear positions can be seen in the figure.
The neutral or idle position is between the first and second gears.

(XC–F)

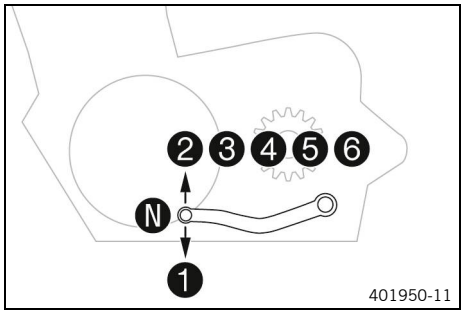

The gear positions can be seen in the figure.
The neutral or idle position is between the first and second gears.

6.15 Brake pedal

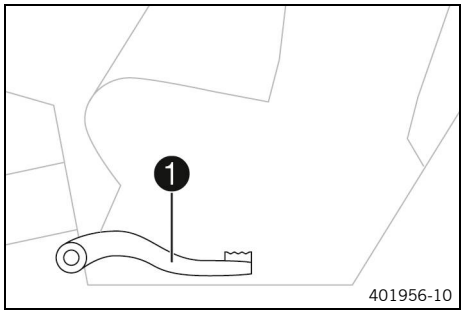

Brake pedal ❶ is located in front of the right footpeg.
The rear brake is operated with the brake pedal.

6.16 Plug-in stand (SX-F models)

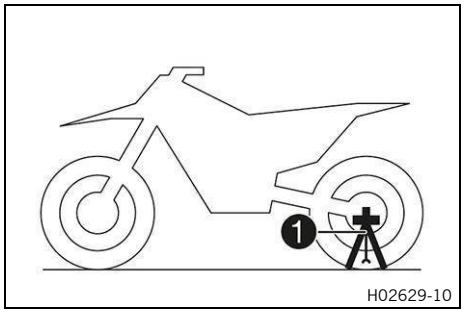

The support for plug-in stand ❶ is on the left side of the wheel spindle.
The plug-in stand is used for parking the motorcycle.
The plug-in stand is used as a fork support when transporting the motorcycle.

Note
The plug-in stand must be removed before riding.
The tool can be attached to the plug-in stand.

6.17 Side stand (XC–F)

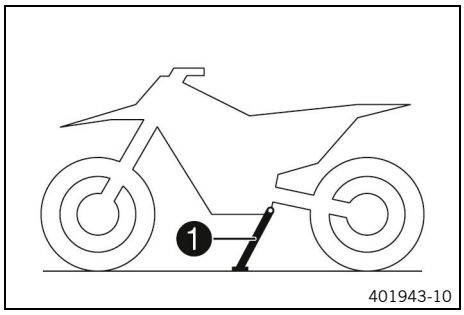

The side stand ❶ is located on the left of the vehicle.
The side stand is used for parking the motorcycle.

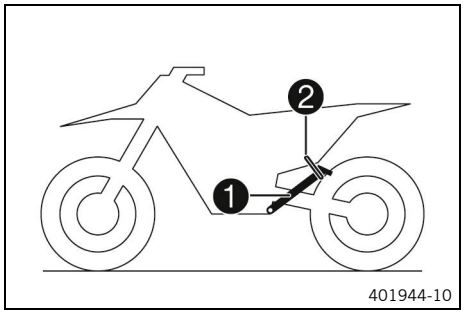

Note
When you are riding, side stand ❶ must be folded up and secured with rubber band ❷.

7.1 Notes on preparing for first use

DANGER
Danger of accidents A rider who is not fit to ride poses a danger to themself and to others.
– Do not operate the vehicle if you are not fit to ride due to alcohol, drugs, or medication.
– Do not operate the vehicle if you are physically or mentally incapable of doing so.

WARNING
Danger of accidents The vehicle is not designed to carry passengers.
– Do not ride with a passenger.

WARNING
Danger of accidents The brake system fails in the event of overheating.
If the brake pedal is not released, the brake pads grind continuously.
– Take your foot off the brake pedal when you are not braking.

WARNING
Danger of accidents Not adapting the riding style constitutes a major risk.
– Adapt the vehicle speed to the road conditions and your riding ability.

WARNING
Danger of accidents Total weight and axle loads influence the handling characteristic.
– Do not exceed the maximum permissible total weight or the axle loads.

WARNING
Risk of injury People who act without authorization endanger themselves and others.
– Never leave the vehicle unattended while the engine is running.
– Secure the vehicle against unauthorized access.

WARNING
Danger of accidents Different tire profiles on the front and rear wheels can make it more difficult to control the vehicle.
– Make sure that only tires of the same tread type are mounted to the front and rear wheel.

WARNING
Risk of injury Missing or inadequate protective clothing increases the risk of injury.
– Wear appropriate protective clothing such as helmet, boots, gloves as well as pants and a jacket with protectors on all rides.
– Always wear protective clothing that is in good condition and meets the legal regulations.

Note
When using the motorcycle, remember that others may be disturbed by excessive noise.

– Ensure that the pre–delivery inspection has been carried out by an authorized contractual partner.
  ✓ The delivery certificate is transferred upon vehicle handover.
– Read the entire owner's manual before riding for the first time.
– Get to know the controls.
– Adjust the basic position of the clutch lever. (p. 95)
– Adjust the basic position of the hand brake lever. (p. 98)
– Adjust the basic position of the brake pedal. (p. 104)
– Adjust the basic position of the gear shift lever. (p. 134)

– Get used to the handling characteristics of the motorcycle on suitable terrain before undertaking a more challenging ride.

Note
This vehicle is not approved for use on public roads.
When off-road, it is recommended that you be accompanied by another person with another vehicle so that you can help each other.

– Also, ride as slowly as possible and in a standing position to get a better feel for the motorcycle.
– Do not undertake any off-road trips that exceed your ability and experience.
– Hold the handlebar firmly with both hands and keep your feet on the footpegs when riding.

(SX-F models)

– Do not take any luggage.

(XC–F)

– If luggage is carried, ensure it is fixed firmly as close as possible to the center of the vehicle and ensure even weight distribution between the front and rear wheels.

Note
Motorcycles react sensitively to any changes of weight distribution.

– The maximum permissible total weight and the maximum permissible axle loads must not be exceeded.

Maximum permissible total weight	335 kg (738.5 lb)
Maximum permissible front axle load	145 kg (319.7 lb)
Maximum permissible rear axle load	190 kg (418.9 lb)

– Check the spoke tension. (p. 115)

The spoke tension must be checked after half an hour of operation.

– Run in the engine. (p. 29)

7.2 Running in the engine

– Do not exceed the specified engine speed and load during the running-in time.

Maximum engine speed	
During the first operating hour	7,000 rpm (116.67 Hz)

Maximum engine power	
during the first 3 operating hours	≤ 75 %

Avoid fully opening the throttle.

7.3 Starting performance of lithium-ion batteries at low temperatures

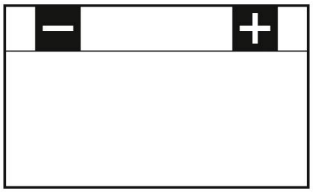

Lithium-ion batteries are far lighter than lead batteries, have a low self-discharge rate, and have more starting power at temperatures over 6 °C (43 °F).

Several attempts to start may be required. Press the start button for 5 seconds, and wait 15 seconds between attempts. At low temperatures, wait for 30 seconds. The pauses are necessary so that the heat created can be distributed through the lithium-ion battery without damaging the lithium-ion battery.

The starting power increases as the battery warms up.

Always make sure the lithium-ion battery is charged to that there is enough power to spare for starting at low temperatures.

After 6 unsuccessful starting attempts, do not try again, and check the vehicle for other faults instead.

7.4 Preparing the vehicle for difficult operating conditions

Note

Use of the vehicle under difficult conditions, such as on sand or on wet and muddy surfaces, can result in significantly increased wear of components, such as the drive train, brake system, or suspension components. For this reason, it may be necessary to inspect or replace parts before the next scheduled service interval.

– Clean the air filter and air filter box. (p. 81)

Check the air filter approx. every 30 minutes.

– Prepare the air filter box cover for securing. (p. 82)
– Check the electrical socket connector for humidity and corrosion and to ensure it is firmly seated.
  » If moisture, corrosion, or damage is found:
    – Clean and dry the socket connector, or change it if necessary.

Difficult operating conditions are:

– Riding on dry sand. (p. 30)
– Riding on wet sand. (p. 31)
– Rides on wet and muddy surfaces. (p. 32)
– Riding at high temperatures or slow speed. (p. 32)
– Riding at low temperatures and in snow. (p. 32)

7.5 Preparing the vehicle for rides on dry sand

– Mount the air filter dust protection.

Read the accompanying mounting instructions.

Air filter dust protection cover (A46006920000)

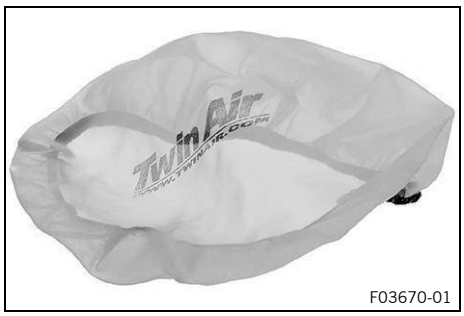

F03670-01

– Mount the air filter sand protection.

Read the accompanying mounting instructions.

Air filter sand protection (A46006922000)

600868-01

– Clean the chain.

Chain cleaner (p. 178)

– Mount the steel sprocket.
– Grease the chain.

Universal oil spray (p. 175)

– Clean the radiator fins.
– Straighten the bent radiator fins carefully.

7.6 Preparing the vehicle for rides on wet sand

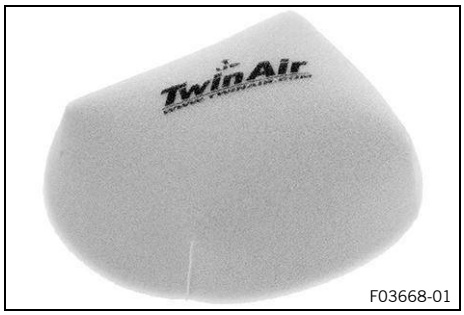

F03668-01

– Mount the air filter water protection.

Read the accompanying mounting instructions.

Air filter water protection (A46006921000)

600868-01

– Clean the chain.

Chain cleaner (p. 178)

– Mount the steel sprocket.
– Grease the chain.

Universal oil spray (p. 175)

– Clean the radiator fins.
– Straighten the bent radiator fins carefully.

7.7 Preparing for rides on wet and muddy surfaces

F03668-01

– Mount the air filter water protection.

Read the accompanying mounting instructions.

Air filter water protection (A46006921000)

600868-01

– Mount the steel sprocket.
– Clean the motorcycle. (p. 142)
– Straighten the bent radiator fins carefully.

7.8 Preparing vehicle for rides at high temperature or slow speed

600868-01

– Adjust the secondary transmission to the road conditions.

Note
The engine oil heats up quickly when the clutch is operated frequently due to an excessively high secondary ratio.

– Clean the chain.

Chain cleaner (p. 178)

– Clean the radiator fins.
– Straighten the bent radiator fins carefully.
– Check the coolant level. (p. 125)

7.9 Preparing the vehicle for low temperatures or snow

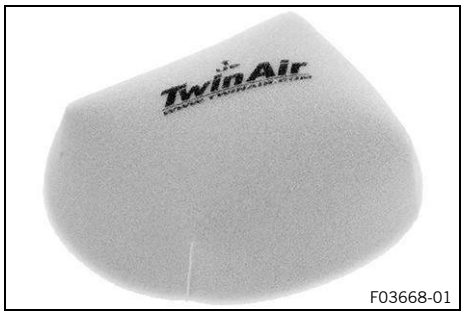

F03668-01

– Mount the air filter water protection.

Read the accompanying mounting instructions.

Air filter water protection (A46006921000)

8.1 Checks and maintenance measures when preparing for use

Note
Before every trip, check the condition of the vehicle and ensure that it is safe to operate.
The vehicle must be in perfect technical condition when it is being operated.

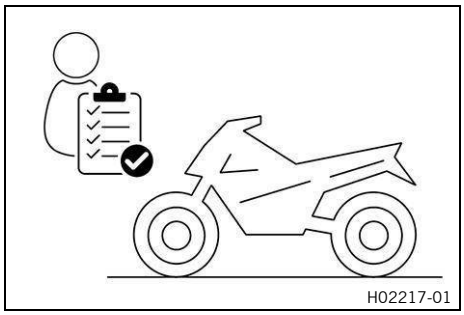

- Check that the electrical equipment is functioning properly.
- Check the engine oil level. (p. 137)
- Check the brake fluid level for the front brake. (p. 99)
- Check the brake fluid level for the rear brake. (p. 105)
- Check that the brake pads of the front brake are secured. (p. 101)
- Check that the brake pads of the rear brake are secured. (p. 107)
- Check the function, condition, and free travel of the brake system.
- Check the coolant level. (p. 125)
- Check the chain for dirt. (p. 88)
- Check the chain, rear sprocket, engine sprocket, and chain guide. (p. 90)
- Check the chain tension. (p. 89)
- Check the tire condition. (p. 113)
- Check the tire pressure. (p. 114)
- Check the spoke tension. (p. 115)

  The spoke tension must be checked regularly as incorrect spoke tension will severely impair riding safety.
- Clean the dust boots of the fork legs. (p. 63)
- Bleed the fork legs. (p. 62)
- Check the air filter and clean if necessary.
- Check the settings of all controls and ensure that they can be operated smoothly.
- Check all screws, nuts, and hose clamps regularly for tightness.
- Check the fuel level.

8.2 Starting the vehicle

DANGER
Danger of poisoning Exhaust gases are toxic and inhaling them may result in unconsciousness and death.
- Always ensure that there is sufficient ventilation when running the engine.
- Use suitable exhaust extraction when starting or running the engine in an enclosed space.

NOTE
Engine failure Running a cold engine at high engine speeds negatively impacts the service life of the engine.
- Always warm up the engine at low engine speeds.

(SX-F models)

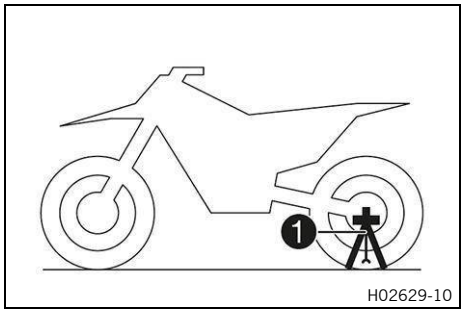

– Remove plug-in stand ❶.

(XC–F)

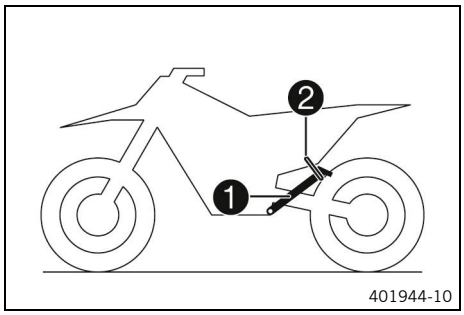

– Take the motorcycle off side stand ❶ and secure the side stand with rubber band ❷.
– Shift the transmission into the neutral position.

Condition: Ambient temperature: < 20 °C (< 68.0 °F)

– Press the cold start button in all the way to the stop.
– Press electric starter ⓢ.

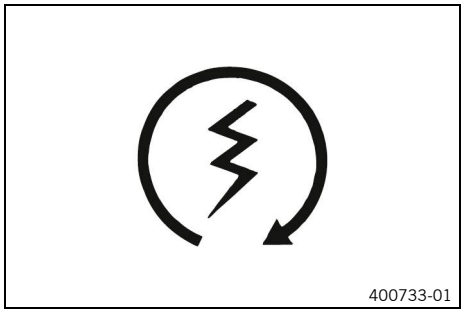

Press the electric starter for a maximum of 5 seconds. Wait for 15 seconds before making another attempt at starting.
After 6 unsuccessful starting attempts, do not try again, and check the vehicle for other malfunctions instead.

Note
At low temperatures, wait for 30 seconds.
At temperatures below 6 °C (43 °F), several attempts at starting may be necessary to warm-up the lithium-ion battery and thereby increase the starting power.
The malfunction indicator light lights up during the starting process.

8.3 Activating launch control

Note
The launch control helps the rider to generate optimum motorcycle acceleration at the beginning of a race. The maximum speed of the engine with the throttle valve fully opened (full throttle) is reduced. After the start, it is gradually increased up to the maximum engine speed. The clutch must be operated exactly as it would be without launch control activated.

Condition: Motorcycle is stationary, The engine is running at idle speed, Transmission is in the neutral position

– Press and hold the TC button ❶ and the QS button ❷ simultaneously.
  ✓ The TC indicator lamp and the QS indicator lamp flash when launch control is activated.

Note

The **launch control** is deactivated automatically for a few seconds after the vehicle has started.

Launch control is also deactivated in the following cases: if the throttle valve is closed more than 1/3 of the way after full throttle, and/or if there is no start within 3 minutes.

For safety reasons, the engine must be switched off for at least 10 seconds before the launch control can be activated again, regardless of whether the vehicle has been started or not.

If the engine has already been running for some time, the engine must first be restarted before the launch control can be activated.

8.4 Activating traction control

Note

The traction control reduces excessive slip on the rear wheel in favor of more control and propulsion, particularly in wet conditions.

When traction control is switched off, the rear wheel may spin more during high acceleration and on surfaces with low grip.

Traction control can be switched on or off during the ride.

The setting most recently selected is activated again when restarting.

– Press the TC button ❶ to switch traction control on or off.

Engine speed	≤ 4,000 rpm (≤ 66.67 Hz)

  ✓ The TC indicator lamp lights up when traction control is activated.

8.5 Starting off

– Pull the clutch lever, shift into first gear, release the clutch lever slowly and at the same time carefully open the throttle.

8.6 Quickshifter

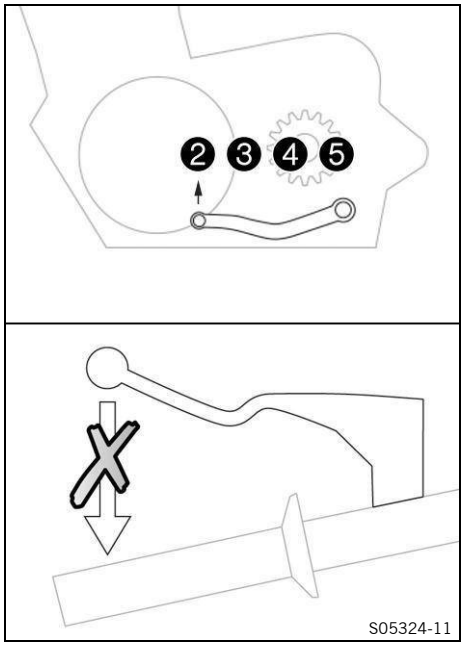

When the **quickshifter** is activated, you can shift up without actuating the clutch.

Note
The quickshifter is not activated when shifting up from first to second gear, and the clutch lever must be used when shifting up instead.
Even if the quickshifter is activated, you need to use the clutch lever to shift down.

Because there is no need to close the throttle grip, uninterrupted gear shifts are possible.
The quickshifter uses the shifter shaft position to check whether or not a shift should be initiated, and sends a corresponding signal to the engine control.
If the quickshifter is deactivated, the clutch needs to be actuated in the normal way for each shift.

8.7 Activate the quickshifter

– Press the QS button 1 to switch the quickshifter on or off.
✓ The QS indicator lamp lights up when the quickshifter is activated.

Note
The quickshifter is not activated when shifting up from first to second gear, and the clutch lever must be used when shifting up instead.
Even if the quickshifter is activated, you need to use the clutch lever to shift down.

8.8 Shifting, riding

WARNING
Danger of accidents If you downshift at high engine speed, the rear wheel blocks and the engine races.
– Do not downshift to a lower gear at high engine speeds.

Note
If you hear unusual noises while riding, stop immediately, switch off the engine, and contact an authorized contractual partner.
First gear is used for starting off or for steep inclines.

- Shift into a higher gear when conditions allow (incline, riding situation, etc.). To do so, release the throttle while simultaneously pulling the clutch lever, shift into the next gear, release the clutch lever and open the throttle.
- If you pushed the cold start button while starting, open the throttle briefly and release the throttle twist grip or turn the throttle twist grip forward.
  ✓ The cold start button goes to the basic position.
- After reaching maximum speed by fully opening the throttle twist grip, turn the throttle back so that it is ¾ open. This will reduce the speed slightly, but the fuel consumption will be considerably lower.
- Only open the throttle as much as the engine can handle. Abruptly opening the throttle increases fuel consumption.
- To shift down, brake and close the throttle at the same time.
- Pull the clutch lever and shift into a lower gear, release the clutch lever slowly, and either open the throttle or shift again.
- Switch off the engine if you are likely to be running at idle speed or stationary for a long time.

≥ 1 min

- Avoid riding the clutch frequently or for too long. This causes the engine oil, engine and cooling system to heat up.
- Ride at a low engine speed instead of at a high engine speed when riding the clutch.

Condition: Quickshifter activated

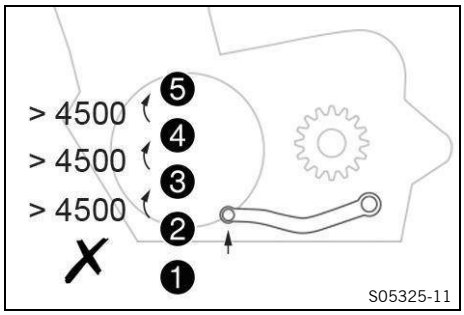

- If the **quickshifter** is activated, you can shift up in the engine speed range shown without pulling the clutch lever.

Note

The quickshifter is not activated when shifting up from first to second gear, and the clutch lever must be used when shifting up instead.

The minimum engine speed before shifting up in revolutions per minute is shown in the figure.

Pull the shift lever to the stop quickly without changing the throttle twist grip position.

Even if the quickshifter is activated, you need to use the clutch lever to shift down.

If the shifting performance of the Quickshifter starts to decrease, it must be reprogrammed.

8.9 Braking

WARNING

Danger of accidents A spongy pressure point on the front or rear brake reduces the brake action.

- Do not drive the vehicle if the brake system has a spongy pressure point.

WARNING
Danger of accidents Braking with excessive force locks the wheels.
– Adapt your braking to the riding situation and the road conditions.

WARNING
Danger of accidents Moisture and dirt impair the brake system.
– Brake carefully several times to dry out and remove dirt from the brake pads and the brake discs.

– On sandy, wet, or slippery surfaces, use mostly the rear brake.
– Always finish braking before you go into a bend. Shift into a lower gear that suits the speed.
– Use the brake action of the engine on long downhill stretches. Shift down one or two gears, but do not overrev the engine when doing so. This means that significantly less braking is required and means the brake system does not overheat.

8.10 Stop, park

WARNING
Danger of burns Some vehicle components become hot when the vehicle is operated.
– Do not touch any parts such as the exhaust system, radiator, engine, damper, or brake system before the vehicle parts have cooled down.
– Allow the vehicle parts to cool down before performing any work on the vehicle.

WARNING
Risk of injury People who act without authorization endanger themselves and others.
– Never leave the vehicle unattended while the engine is running.
– Secure the vehicle against unauthorized access.

NOTE
Fire hazard Hot vehicle components pose a fire hazard and explosion risk.
– Do not park the vehicle near materials which are highly flammable or explosive.
– Allow the vehicle to cool down before covering it.

NOTE
Material damage The vehicle may be damaged if parked incorrectly.
Damage can occur if the vehicle rolls away or falls over.
The components for parking the vehicle are designed only for the weight of the vehicle.
– Park the vehicle on a firm and level surface.
– Make sure that nobody sits on the vehicle when it is parked on a stand.

– Brake the motorcycle.
– Shift the transmission into the neutral position.
– Press kill button when the engine is at idle speed until the engine stops.
– Park the motorcycle on firm ground.

8.11 Transportation

NOTE

Fire hazard Hot vehicle components pose a fire hazard and explosion risk.

– Do not park the vehicle near materials which are highly flammable or explosive.
– Allow the vehicle to cool down before covering it.

NOTE

Material damage The vehicle may be damaged if parked incorrectly.

Damage can occur if the vehicle rolls away or falls over.

The components for parking the vehicle are designed only for the weight of the vehicle.

– Park the vehicle on a firm and level surface.
– Make sure that nobody sits on the vehicle when it is parked on a stand.

(SX-F models)

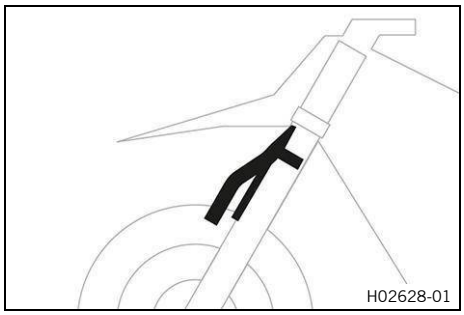

– Switch off the engine.
– Mount the plug-in stand on the fork legs.

Make sure the brake line runs in front of the plug-in stand and does not become wedged.

Plug-in stand (A46029094000)

Note

The plug-in stand is included in the scope of supply.

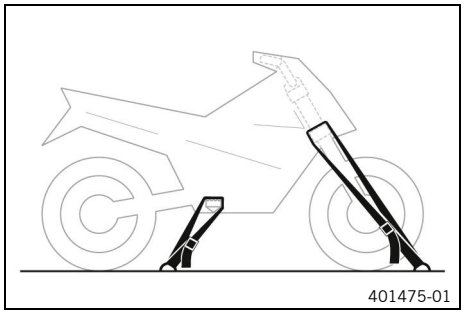

– Use tension belts or other suitable devices to secure the motorcycle against falling over or rolling away.

Only tighten the tension belts to the point that the plug-in stand is firmly in contact with the fender and the tires.
Make sure that the plug-in stand is aligned with the underside of the fender.

(XC–F)

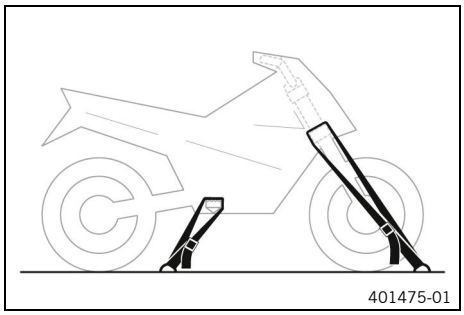

– Switch off the engine.
– Use tension belts or other suitable devices to secure the motorcycle against falling over or rolling away.

8.12 Refueling

DANGER

Fire hazard Fuel is highly flammable.

The fuel in the fuel tank expands when warm and can escape if overfilled.

- Do not refuel the vehicle in the vicinity of open flames, glowing, or smoldering objects.
- Make sure that nobody smokes in the vicinity of the vehicle during the refueling process.
- Switch off the engine for refueling.
- Make sure that no fuel is spilled; particularly not on hot parts of the vehicle.
- If any fuel is spilled, wipe it up immediately.
- Do not overfill the fuel tank.

WARNING

Danger of poisoning Fuel is harmful to health.

- Do not allow fuel to come into contact with skin, eyes, or clothing.
- Consult a doctor immediately if fuel has been ingested.
- Do not inhale fuel vapors.
- Rinse the affected area immediately with plenty of water in the event of contact with skin.
- Rinse eyes thoroughly with water and consult a doctor immediately if fuel comes into contact with eyes.
- If fuel spills on to your clothing, change the clothing.
- Store fuel properly in a suitable container and keep out of the reach of children.

NOTE

Material damage Inadequate fuel quality can lead to losses in performance and consequential damage.

- Refuel only with clean fuel that meets the specified standards.

NOTE

Environmental hazard Improper handling of fuel is dangerous to the environment.

- Do not allow fuel to enter the groundwater, the soil, or the sewage system.

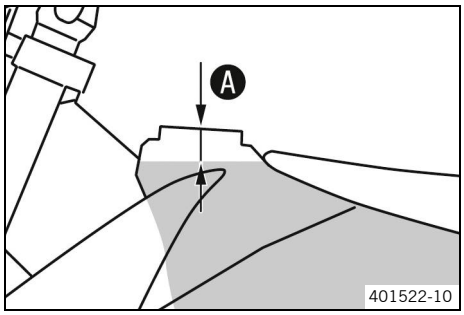

- Switch off the engine.
- Open the fuel tank cap. (p. 23)
- Fill the fuel tank with fuel up to a maximum of level A.

Dimension A	35 mm (1.38 in)

Total fuel tank capacity, approx. **(SX-F EU and US)**	
Super unleaded (ROZ 95) (p. 174)	7.2 l (1.90 liq. gal_{US})
Total fuel tank capacity, approx. **(BR)**	
Super unleaded, type C (ROZ 95/RON 95/PON 91) (p. 174)	7.2 l (1.90 liq. gal_{US})
Total fuel tank capacity, approx. **(XC–F)**	
Super unleaded (ROZ 95) (p. 174)	8.5 l (2.25 liq. gal_{US})

– Close the fuel tank cap. (p. 24)

9.1 Service schedule

Any further work that results from the service work must be ordered separately and invoiced separately.

Different service intervals may apply in your country, depending on the local operating conditions.

If the vehicle is used in particularly harsh conditions such as heavy rain, mud, sand, snow, extreme temperatures, frequent full load etc., shorter service intervals than those in the table may be necessary.

Individual service intervals and scopes may change in the course of technical developments. The most up-to-date service schedule is available for authorized contractual partners for the electronic proof of service. Your authorized contractual partner will be happy to advise you.

	After one operating hour	Every 15 operating hours	Every 45 operating hours	Every 90 operating hours	Every 24 months
Read out the fault memory using the diagnostics tool.	○	●	●	●	●
Program the gear position sensor.		●	●	●	
Check that the electrical equipment is functioning properly.	○	●	●	●	
Check and charge the 12 V battery.	○	●	●	●	●
Check that the brake pads of the front brake are secured. (p. 101)	○	●	●	●	●
Check that the brake pads of the rear brake are secured. (p. 107)	○	●	●	●	●
Check the brake discs. (p. 98)	○	●	●	●	●
Check the brake lines for damage and tightness.	○	●	●	●	●
Check the brake fluid level for the front brake. (p. 99)	○	●	●		
Change the brake fluid for the front brake.				●	●
Check the brake fluid level for the rear brake. (p. 105)	○	●	●		
Change the brake fluid for the rear brake.				●	●
Check/correct the fluid level of the hydraulic clutch. (p. 95)			●		
Change the hydraulic clutch fluid. (p. 96)				●	●
Check the free travel on the hand brake lever. (p. 98)	○	●	●	●	●
Check the free travel of the brake pedal. (p. 104)	○	●	●	●	●
Check the idle speed.	○	●	●	●	●
Change the engine oil and oil filter, clean the oil screen. (p. 138)	○	●	●	●	●
Check all hoses (e.g. fuel, cooling, bleeder, drainage, etc.) and boots for cracking, leaks, and correct routing.	○	●	●	●	●
Check the cables for damage and that there are no kinks in the routing.		●	●	●	●
Check that the clutch cables are undamaged, routed without kinks, and set correctly.		●	●	●	●
Check the frame. (p. 93)		●	●	●	
Check the swingarm. (p. 93)		●	●	●	
Check the swingarm bearing for play.			●	●	
Check the heim joint on the shock absorber for play.			●	●	
Check the shock absorber linkage.		●	●	●	
Check the tire condition. (p. 113)		●	●	●	●

	After one operating hour	Every 15 operating hours	Every 45 operating hours	Every 90 operating hours	Every 24 months
Check the tire pressure. (p. 114)		●	●	●	●
Check the wheel bearing for play.		●	●	●	
Check the hubs.		●	●	●	
Check the rim run-out.	○	●	●	●	
Check the spoke tension. (p. 115)	○	●	●	●	
Check the chain, rear sprocket, engine sprocket, and chain guide. (p. 90)	○	●	●	●	
Check the chain tension. (p. 89)	○	●	●	●	●
Grease all moving parts (e.g., hand lever, chain, etc.) and check for smooth operation.	○	●	●	●	●
Change the spark plug and spark plug connector.			●	●	
Check the valve clearance.	○		●	●	
Change the fuel filter.				●	●
Check the clutch.		●	●	●	
Clean the air filter and air filter box. (p. 81)		●	●	●	●
Change the damping material on the main silencer. (p. 84)			●	●	
Carry out fork service.			●	●	
Service the shock absorber.			●	●	
Check all screws, nuts, and hose clamps for a tight fit.	○	●	●	●	●
Change the fuel screen. (p. 136)	○	●	●	●	●
Check the fuel pressure.	○		●	●	●
Check the frost protection and coolant level. (p. 124)			●	●	
Check the coolant level. (p. 125)	○	●			
Change the coolant. (p. 127)					●
Check the steering head bearing play. (p. 71)	○	●			
Lubricate the steering head bearing. (p. 72)			●	●	●
Perform minor engine service including removing and installing the engine. (Change the piston, check/measure the cylinder. Check the cylinder head. Check the camshaft and valve train components. Check the timing assembly. Change the radial shaft seals and water pump gasket. Change the intake flange. Change inlet sleeve.)			●	●	
Perform major engine service, engine is removed. (Change valves, valve springs, valve spring seats, and valve spring retainer. Change the connecting rod, conrod bearing and crank pin. Check the transmission and shift mechanism. Check the oil pressure control valve. Change the suction pump. Check the force pump and lubrication system. Change the timing chain. Change all engine bearings and all gaskets. Change the freewheel.)				●	
Final check: check vehicle for operating safety.	○	●	●	●	●
Take a test ride.	○	●	●	●	●
Read out the fault memory after the test ride using the diagnostics tool.	○	●	●	●	●
Enter the electronic proof of service in the contractual partner portal.	○	●	●	●	●

- ○ One-time interval
- ● Periodic interval

10.1 Checking the basic chassis setting with the rider's weight

Note
When adjusting the basic chassis setting, first adjust the shock absorber and then the fork.

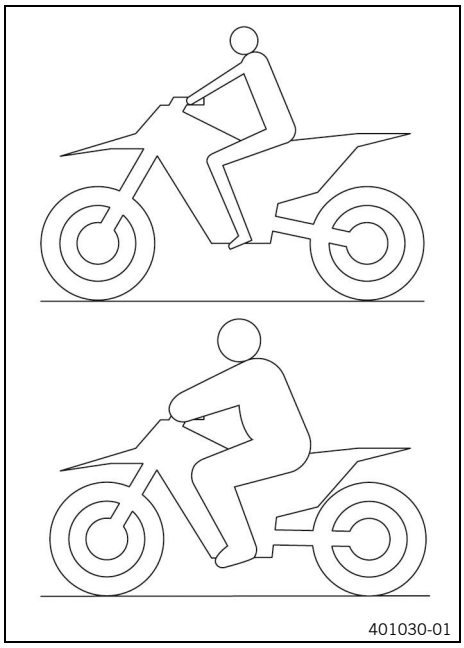

- For optimal motorcycle riding characteristics and to avoid damage to forks, shock absorbers, swingarm, and frame, the basic settings of the suspension components must match the rider's weight.
- As delivered, KTM offroad motorcycles are adjusted for an average rider's weight (with full protective clothing).

Standard rider's weight	75 kg ... 85 kg (165.3 lb ... 187.4 lb)

- If the rider's weight is above or below this range, the basic setting of the suspension components must be adjusted accordingly.
- Small weight differences can be compensated by adjusting the spring pretension of the shock absorber, but in the case of large weight differences, the springs must be replaced.

10.2 Air suspension XACT (SX-F models)

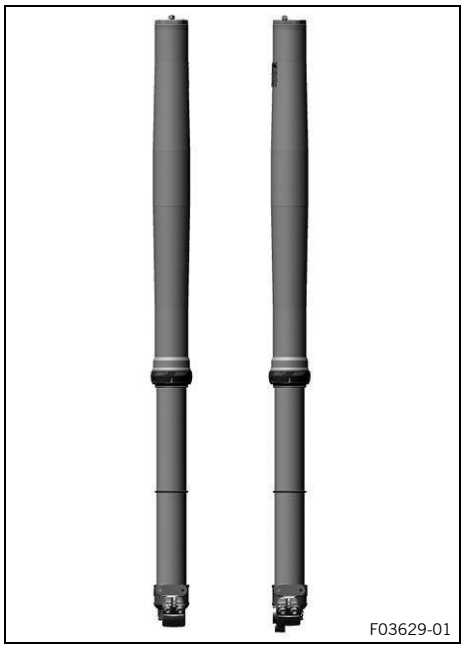

Air suspension **WP XACT** is used in the fork.

In this system, the suspension is located in the left fork leg and damping in the right fork leg.

As fork springs are no longer required, a significant weight advantage is achieved when compared to conventional forks. The response on slightly uneven surfaces is significantly improved.

In normal driving mode, suspension is provided exclusively by an air cushion. A fluid barrier is located in the left fork leg as an end stop.

Note
If the fork frequently bottoms out, then the fork air pressure must be increased to avoid damage to the fork and frame.

The air pressure in the fork can be quickly adjusted to the rider's weight, surface conditions, and the rider's preference using a fork air pump. The fork does not have to be dismantled. The time-consuming mounting of harder or softer fork springs is not required.

If the air chamber loses air due to a damaged seal, the fork will still not sag. In this case the air is retained in the fork. The suspension travel is maintained as far as possible. The damping becomes harder, and the riding comfort is reduced.

As with a conventional fork, the damping can be adjusted in rebound and compression stages.

The rebound adjustment is located at the lower end of the right fork leg.

The compression adjustment is located at the upper end of the right fork leg.

10.3 Compression damping of the shock absorber

The compression damping of the shock absorber is divided into two ranges: high-speed and low-speed.

High-speed and low-speed refer to the compression speed of the rear wheel suspension and not to the vehicle speed.

The high-speed compression has an effect, for example, when landing after a jump: the rear wheel suspension compresses quickly.

The low-speed compression has an effect, for example, when riding over long bumps: the rear wheel suspension compresses slowly.

These two ranges can be adjusted separately, although the transition between high-speed and low-speed is floating. As a result, changes in the high-speed range affect the compression damping in the low-speed range and vice versa.

10.4 Adjusting the low-speed compression damping of the shock absorber

CAUTION

Risk of injury Parts of the shock absorber will move erratically if the shock absorber is detached incorrectly.

The shock absorber is filled with highly compressed nitrogen.

– Please follow the description provided.

Note

The effect of the low-speed compression adjustment can be seen in slow to normal compression of the shock absorber.

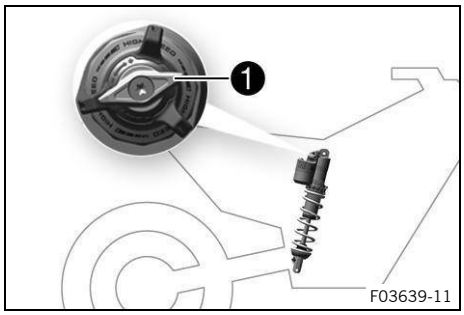

– Turn adjusters ❶ clockwise all the way to the stop.
– Turn counterclockwise by the number of clicks corresponding to the shock absorber type.

Low-speed compression damping **(All SX-F except US)**	
Comfort	17 clicks
Standard	15 clicks
Sport	13 clicks

Low-speed compression damping **(SX-F US)**	
Comfort	17 clicks
Standard	15 clicks
Sport	13 clicks

Low-speed compression damping **(XC–F)**	
Comfort	17 clicks
Standard	15 clicks
Sport	13 clicks

Note
Turning clockwise increases damping; turning anticlockwise reduces damping.

10.5 Adjusting the high-speed compression damping of the shock absorber

CAUTION
Risk of injury Parts of the shock absorber will move erratically if the shock absorber is detached incorrectly. The shock absorber is filled with highly compressed nitrogen.
– Please follow the description provided.

Note
The effect of the high-speed compression adjustment can be seen in the fast compression of the shock absorber.

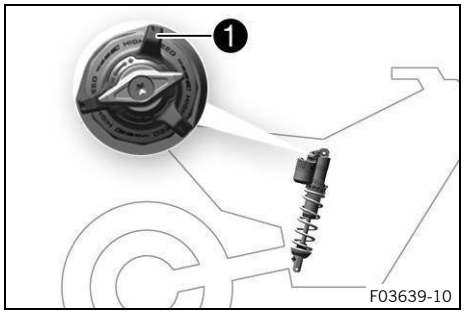

– Turn adjusters 1 clockwise all the way to the stop.
– Turn counterclockwise by the number of turns corresponding to the shock absorber type.

High-speed compression damping **(All SX-F except US)**	
Comfort	2 turns (720°)
Standard	1.5 turns (540°)
Sport	1 turn (360°)

High-speed compression damping **(SX-F US)**	
Comfort	2 turns (720°)
Standard	1.5 turns (540°)
Sport	1 turn (360°)

High-speed compression damping **(XC–F)**	
Comfort	2 turns (720°)
Standard	1.5 turns (540°)
Sport	1 turn (360°)

Note
Turning clockwise increases damping; turning anticlockwise reduces damping.

10.6 Adjusting the rebound damping of the shock absorber

CAUTION
Risk of injury Parts of the shock absorber will move erratically if the shock absorber is detached incorrectly.
The shock absorber is filled with highly compressed nitrogen.
– Please follow the description provided.

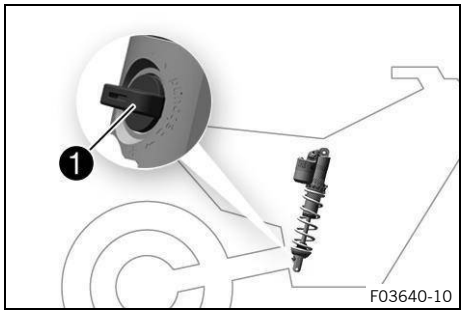

– Turn adjusters 1 clockwise up to the last perceptible click.
– Turn counterclockwise by the number of clicks corresponding to the shock absorber type.

Rebound damping **(All SX-F except US)**	
Comfort	17 clicks
Standard	15 clicks
Sport	13 clicks

Rebound damping **(SX-F US)**	
Comfort	17 clicks
Standard	15 clicks
Sport	13 clicks

Rebound damping **(XC–F)**	
Comfort	17 clicks
Standard	15 clicks
Sport	13 clicks

Note
Turning clockwise increases damping; turning anticlockwise reduces damping on rebound.

10.7 Measuring the dimension of the unloaded rear wheel

Preparatory work

– Raise the motorcycle with a lift stand. (p. 61)

Main work

– Position the sag scale in the rear axle and measure the distance to marking **SAG** on the rear fender.

Sag scale (00029090200)

– Note the value as dimension A.

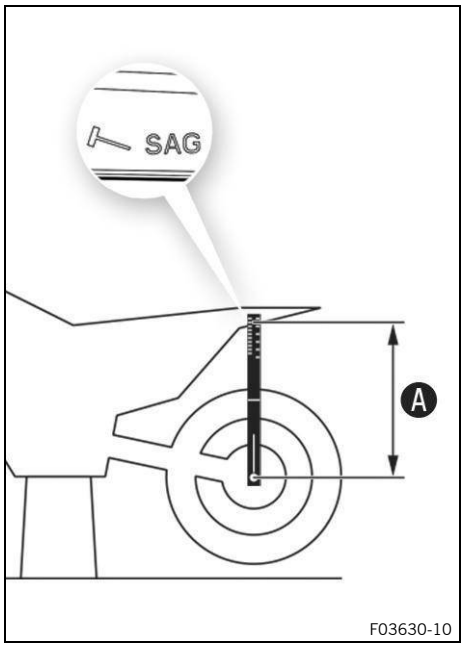

Reworking

– Remove the motorcycle from the lift stand. (p. 61)

10.8 Checking the static sag of the shock absorber

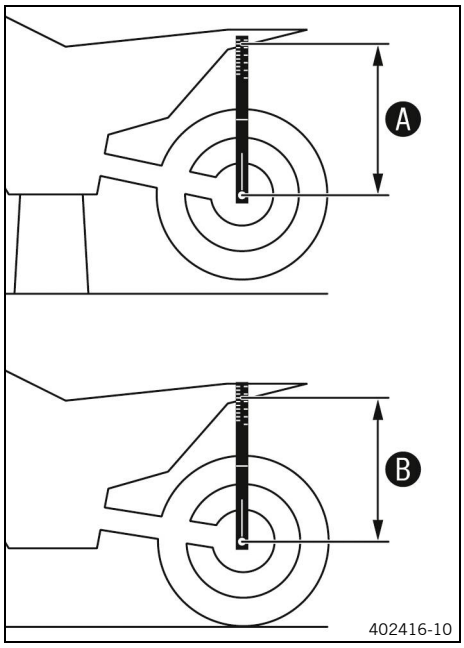

– Measure dimension A of rear wheel unloaded. (p. 49)
– Hold the motorcycle upright with aid of an assistant.
– Measure the distance again between the rear axle and marking **SAG** on the rear fender using the sag scale.
– Note the value as dimension B.

Note
The static sag is the difference between measurements A and B.

– Check the static sag.

Static sag **(All SX-F except US)**	35 mm (1.38 in)
Static sag **(SX-F US)**	35 mm (1.38 in)
Static sag **(XC–F)**	35 mm (1.38 in)

» If the static sag is more or less than the specified value:
  – Adjust the preload for the shock absorber. (p. 51)

10.9 Checking the rider sag of the shock absorber

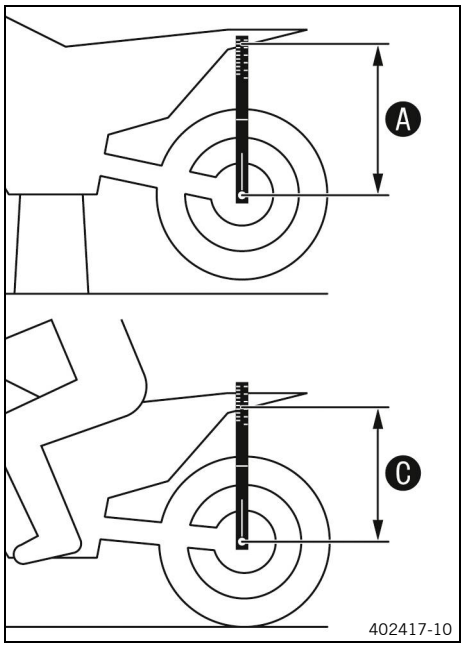

– Measure dimension A of rear wheel unloaded. (p. 49)
– With another person holding the motorcycle, sit on the saddle with full protective clothing in a normal sitting position (feet on footrests) and bounce up and down a few times.
  ✓ The rear wheel suspension levels out.
– With the help of another person, remeasure the distance between the rear axle and marking **SAG** on the rear fender using the sag scale.
– Note the value as dimension C.

Note
The rider sag is the difference between measurements A and C.

– Check the rider sag.

Rider sag **(All SX-F except US)**	105 mm (4.13 in)
Rider sag **(SX-F US)**	105 mm (4.13 in)
Rider sag **(XC–F)**	105 mm (4.13 in)

» If the rider sag differs from the specified measurement:
– Adjust the rider sag. (p. 52)

10.10 Adjusting the preload for the shock absorber

CAUTION
Risk of injury Parts of the shock absorber will move erratically if the shock absorber is detached incorrectly. The shock absorber is filled with highly compressed nitrogen.
– Please follow the description provided.

Note
Note the current adjustment before changing the spring preload - e.g. measure the spring length.

Preparatory work
– Remove the muffler. (p. 83)
– Remove the frame protector. (p. 65)
– Raise the motorcycle with a lift stand. (p. 61)
– Remove the shock absorber. (p. 74)
– After removing the shock absorber, clean it thoroughly.

Main work

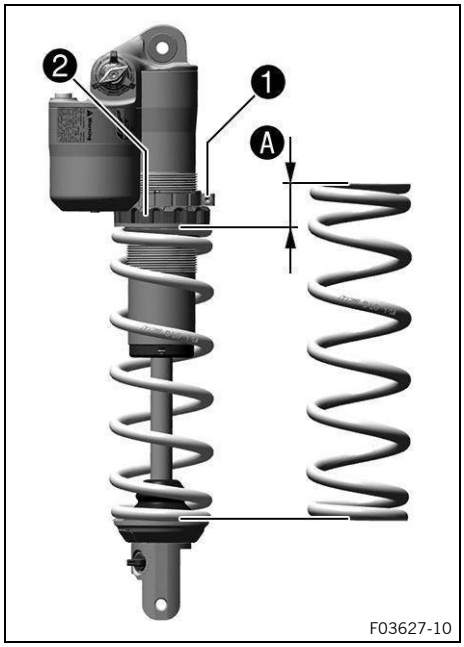

– Loosen screw 1.
– Turn adjusting ring 2 counterclockwise all the way until the spring is fully relieved of tension.

Hook wrench (90129051000)

Note
If the spring cannot be fully released, the spring must be removed to accurately measure the spring length.

– Measure the total spring length while the spring is not under tension.
– Tension the spring by turning adjusting ring 2 to the specified degree A.

Preload **(All SX-F except US)**	8 mm (0.31 in)
Preload **(SX-F US)**	8 mm (0.31 in)
Preload **(XC–F)**	8 mm (0.31 in)

Note
Depending on the static sag and/or the rider sag, it may be necessary to increase or decrease the spring preload.

– Tighten screw ❶.

Screw, shock absorber adjusting ring	
M5×20	5 Nm (3.7 ft·lb$_f$)

Make sure that the adjusting ring does not touch any other components when installed.

Reworking

– Install the shock absorber. (p. 76)
– Check the free travel of the brake pedal. (p. 104)
– Remove the motorcycle from the lift stand. (p. 61)
– Install the frame protector. (p. 65)
– Install the muffler. (p. 83)

10.11 Adjusting the rider sag

Preparatory work

– Remove the muffler. (p. 83)
– Remove the frame protector. (p. 65)
– Raise the motorcycle with a lift stand. (p. 61)
– Remove the shock absorber. (p. 74)
– After removing the shock absorber, clean it thoroughly.

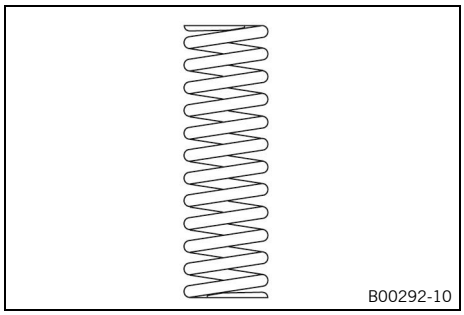

Main work

– Select and mount a suitable spring.

Spring rate **(All SX-F except US)**	
Weight of rider: 65 kg … 75 kg (143.3 lb … 165.3 lb)	39 N/mm (222.7 lb_f/in)
Weight of rider: 75 kg … 85 kg (165.3 lb … 187.4 lb)	42 N/mm (239.8 lb_f/in)
Weight of rider: 85 kg … 95 kg (187.4 lb … 209.4 lb)	45 N/mm (257.0 lb_f/in)

Spring rate **(SX-F US)**	
Weight of rider: 65 kg … 75 kg (143.3 lb … 165.3 lb)	39 N/mm (222.7 lb_f/in)
Weight of rider: 75 kg … 85 kg (165.3 lb … 187.4 lb)	42 N/mm (239.8 lb_f/in)
Weight of rider: 85 kg … 95 kg (187.4 lb … 209.4 lb)	45 N/mm (257.0 lb_f/in)

Spring rate **(XC–F)**	
Weight of rider: 65 kg … 75 kg (143.3 lb … 165.3 lb)	39 N/mm (222.7 lb_f/in)
Weight of rider: 75 kg … 85 kg (165.3 lb … 187.4 lb)	42 N/mm (239.8 lb_f/in)
Weight of rider: 85 kg … 95 kg (187.4 lb … 209.4 lb)	45 N/mm (257.0 lb_f/in)

Note
The spring rate is shown on the outside of the spring.

Reworking

– Install the shock absorber. (p. 76)
– Check the free travel of the brake pedal. (p. 104)
– Remove the motorcycle from the lift stand. (p. 61)
– Install the frame protector. (p. 65)
– Install the muffler. (p. 83)
– Check the static sag of the shock absorber. (p. 50)
– Check the rider sag of the shock absorber. (p. 50)
– Adjust the rebound damping of the shock absorber. (p. 48)
– Remove the motorcycle from the lift stand. (p. 61)

10.12 Checking the basic setting of the fork

Note
For various reasons, no exact rider sag can be determined for the fork.

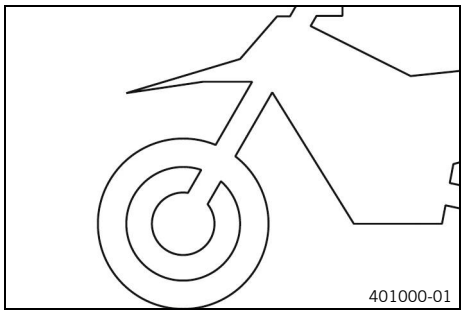

- Smaller differences in the rider's weight can be compensated for by the fork air pressure.
- However, if the fork frequently bottoms out (hard end stop on compression), the fork air pressure must be increased, within the specified values, to avoid damage to the fork and frame.
- If the fork feels unusually hard after extended periods of operation, the fork legs need to be bled.

10.13 Adjusting the fork air pressure (SX-F models)

WARNING
Danger of accidents Modifications to the suspension settings that are not properly coordinated can impair the handling and overload components.
- Only make adjustments within the recommended range.
- Ride slowly to start with after making adjustments to get the feel of the new handling characteristics.

Note
Check or adjust the air pressure under the same conditions at the earliest 5 minutes after switching off the engine.
The air suspension is located in the left fork leg. The pressure and rebound damping is located in the right fork leg.

Preparatory work
- Raise the motorcycle with a lift stand. (p. 61)

Main work

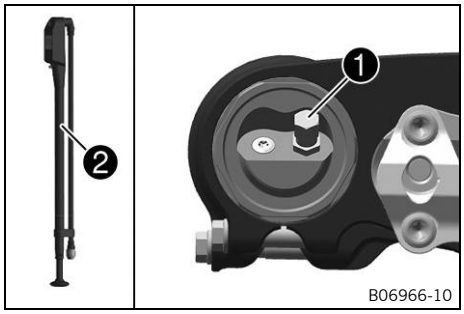

- Remove protection cap ❶.
- Fully put fork air pump ❷ together.

Fork air pump (79412966100)

Note
The fork air pump is included as part of the motorcycle's accessory pack.

- Connect the fork air pump to the left fork leg.

Read the accompanying instructions.

✓ The fork air pump indicator switches on automatically.
✓ A little air escapes from the fork leg when connecting.

Note
This is due to the volume of the hose and is not due to a defect in the fork air pump or the fork.

– Adjust the air pressure as specified.

Do not set the air pressure outside the specified range.

Air pressure **(All SX-F except US)**	
Weight of rider: 65 kg ... 75 kg (143.3 lb ... 165.3 lb)	10.1 bar (146.5 psi)
Weight of rider: 75 kg ... 85 kg (165.3 lb ... 187.4 lb)	10.3 bar (149.4 psi)
Weight of rider: 85 kg ... 95 kg (187.4 lb ... 209.4 lb)	10.5 bar (152.3 psi)

Air pressure **(SX-F US)**	
Weight of rider: 65 kg ... 75 kg (143.3 lb ... 165.3 lb)	10.1 bar (146.5 psi)
Weight of rider: 75 kg ... 85 kg (165.3 lb ... 187.4 lb)	10.3 bar (149.4 psi)
Weight of rider: 85 kg ... 95 kg (187.4 lb ... 209.4 lb)	10.5 bar (152.3 psi)

Gradual change of the air pressure in steps by	0.2 bar (2.9 psi)
Minimum air pressure	7 bar (102 psi)
Maximum air pressure	12 bar (174 psi)

– Disconnect the fork air pump from the left fork leg.
  ✓ When disconnecting, excess pressure will escape from the hose – the fork leg itself does not lose any air.
  ✓ The fork air pump display switches off automatically after 80 seconds.
– Mount the protection cap.

Only mount the protection cap by hand.

Reworking

– Remove the motorcycle from the lift stand. (p. 61)

10.14 Adjusting the compression damping of the fork

Note
The hydraulic compression damping determines the fork suspension behavior.

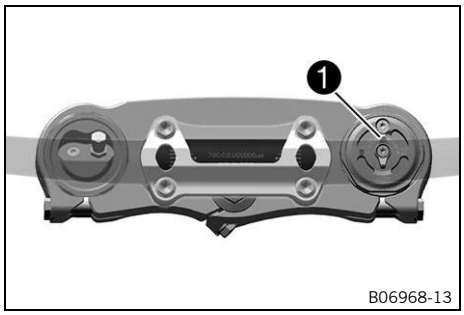

(SX-F models)

– Turn adjusters ❶ clockwise all the way to the stop.

Note
Adjusters ❶ are located at the top end of the fork legs.

– Turn counterclockwise by the number of clicks corresponding to the fork type.

Compression damping **(All SX-F except US)**	
Comfort	17 clicks
Standard	12 clicks
Sport	7 clicks

Compression damping **(SX-F US)**	
Comfort	17 clicks
Standard	12 clicks
Sport	7 clicks

Note
Turning clockwise increases damping; turning counterclockwise reduces damping during compression.

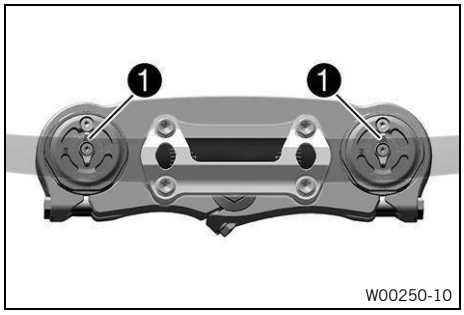

(XC–F)

– Turn adjusters ❶ clockwise all the way to the stop.

Note
Adjusters ❶ are located at the top end of the fork legs.

– Turn counterclockwise by the number of clicks corresponding to the fork type.

Compression damping	
Comfort	17 clicks
Standard	12 clicks
Sport	7 clicks

Note
Turning clockwise increases damping; turning counterclockwise reduces damping during compression.

10.15 Adjusting the rebound damping of the fork

Note
The hydraulic rebound damping determines the fork suspension behavior.

(SX-F models)

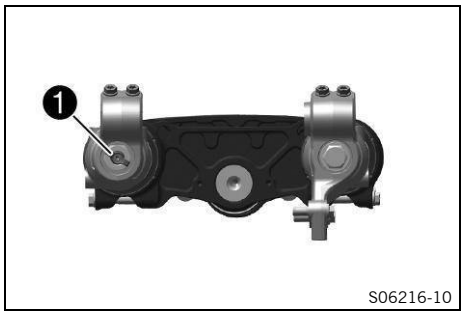

– Turn adjusters ❶ clockwise all the way to the stop.

Note
Adjuster ❶ is located at the lower end of the right fork leg.

– Turn counterclockwise by the number of clicks corresponding to the fork type.

Rebound damping **(All SX-F except US)**	
Comfort	17 clicks
Standard	12 clicks
Sport	7 clicks

Rebound damping **(SX-F US)**	
Comfort	23 clicks
Standard	18 clicks
Sport	13 clicks

Note
Turning clockwise increases damping; turning anticlockwise reduces damping on rebound.

(XC–F)

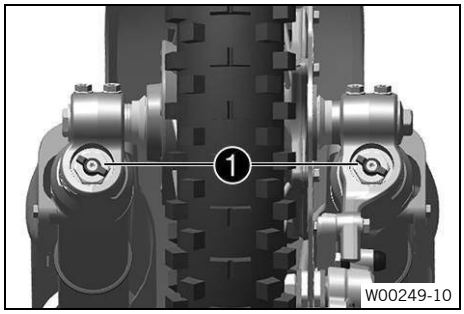

– Turn adjusters ❶ clockwise all the way to the stop.

Note
Adjusters ❶ are located at the bottom end of the fork legs.

– Turn counterclockwise by the number of clicks corresponding to the fork type.

Rebound damping	
Comfort	23 clicks
Standard	18 clicks
Sport	13 clicks

Note
Turning clockwise increases damping; turning anticlockwise reduces damping on rebound.

10.16 Handlebar position

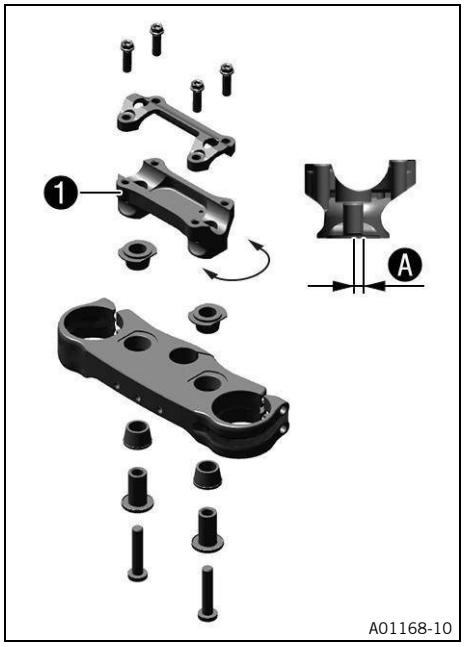

The holes on handlebar mount 1 are placed at a distance of A from the center.

Hole distance A	3.5 mm (0.138 in)

The handlebar can be mounted in 2 different positions. This allows the handlebar to be mounted in the most comfortable position for the rider.

Note
In addition, the handlebar can be mounted rigidly or on a rubber support.

10.17 Adjusting the handlebar position

WARNING
Danger of accidents A repaired handlebar poses a safety risk.
If the handlebar is bent or straightened, the material becomes fatigued. The handlebar may break as a result.
– Change the handlebar if the handlebar is damaged or bent.

Note
The handlebar can be mounted rigidly or on a rubber bearing.

Preparatory work
– Remove the handlebar pad.

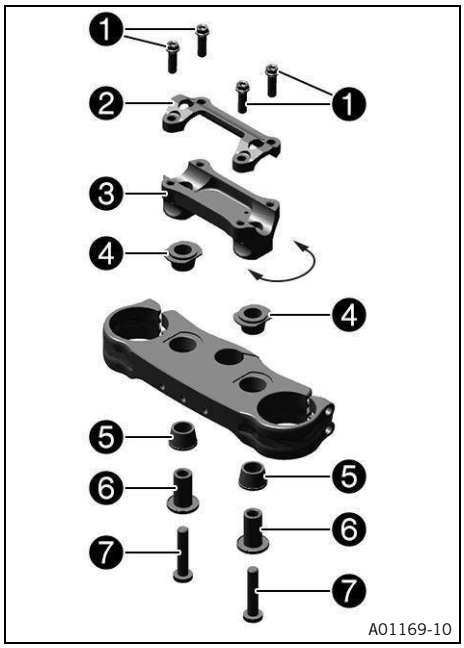

Main work

– Remove screws ❶.
– Take off handlebar clamp ❷.
– Remove the handlebar and lay it to one side.
– Remove screws ❼ and bushings ❻.
– Take off handlebar support ❸.

Protect the components against damage by covering them.
Do not kink the cables or lines.

– Select one of the following alternatives.

Adjusting the handlebar position with handlebar clamp with rubber bushings

– Position the rubber bushings ❹ and ❺.
– Place the handlebar mount in the required position.

Note
The handlebar mount is longer and higher on one side.

– Mount and tighten the screws ❼ with the bushings ❻.

Screw, handlebar mount	
M10×50	40 Nm (29.5 ft·lb$_f$) **Loctite® 243**

– Position the handlebar.

Make sure the cables and wiring are positioned correctly.

– Position handlebar clamp ❷.
– Mount screws ❶, but do not tighten yet.

Screw, handlebar clamp	
M8×25	20 Nm (14.8 ft·lb$_f$)

– Tighten screws ❶ evenly.

First bolt the handlebar clamp with screws ❶ onto the longer, higher side of the handlebar support so that both parts touch.

Screw, handlebar clamp	
M8×25	20 Nm (14.8 ft·lb$_f$)

Adjusting the handlebar position with the rigid handlebar clamp

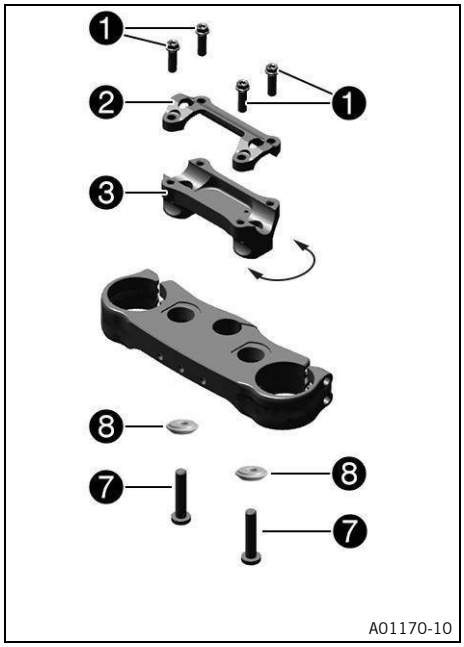

– Place the handlebar mount in the required position.

Note
The handlebar mount is longer and higher on one side.

– Mount and tighten the screws ❼ with the bushings ❽.

Screw, handlebar mount	
M10×50	40 Nm (29.5 ft·lb$_f$) **Loctite® 243**

Rigid handlebar clamp bushing (A46001038010)

✓ The conical side of the bushing faces downward.

– Position the handlebar.

Make sure the cables and wiring are positioned correctly.

– Position handlebar clamp ❷.
– Mount screws ❶, but do not tighten yet.

Screw, handlebar clamp	
M8×25	20 Nm (14.8 ft·lb$_f$)

– Tighten screws ❶ evenly.

First bolt the handlebar clamp with screws ❶ onto the longer, higher side of the handlebar support so that both parts touch.

Screw, handlebar clamp	
M8×25	20 Nm (14.8 ft·lb$_f$)

Reworking

– Mount the handlebar pad.

11.1 Raising the motorcycle with a lift stand

NOTE

Material damage The vehicle may be damaged if parked incorrectly.
Damage can occur if the vehicle rolls away or falls over.
The components for parking the vehicle are designed only for the weight of the vehicle.
– Park the vehicle on a firm and level surface.
– Make sure that nobody sits on the vehicle when it is parked on a stand.

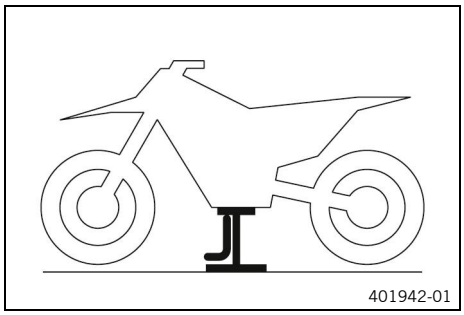

(SX-F models)

– Remove the plug-in stand and lift up the motorcycle by the frame underneath the engine.

Lift stand (78129955100)

✓ Neither wheel is in contact with the ground.
– Secure the motorcycle against falling over.

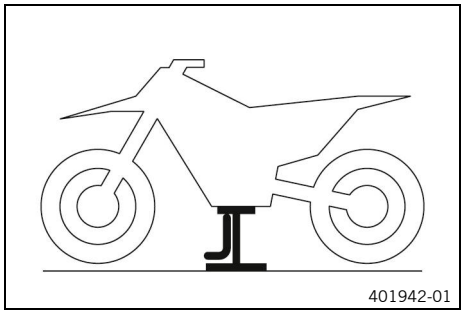

(XC–F)

– Fold in the side stand and raise the motorcycle at the frame underneath the engine.

Lift stand (78129955100)

✓ Neither wheel is in contact with the ground.
– Secure the motorcycle against falling over.

11.2 Removing the motorcycle from the lift stand

NOTE

Material damage The vehicle may be damaged if parked incorrectly.
Damage can occur if the vehicle rolls away or falls over.
The components for parking the vehicle are designed only for the weight of the vehicle.
– Park the vehicle on a firm and level surface.
– Make sure that nobody sits on the vehicle when it is parked on a stand.

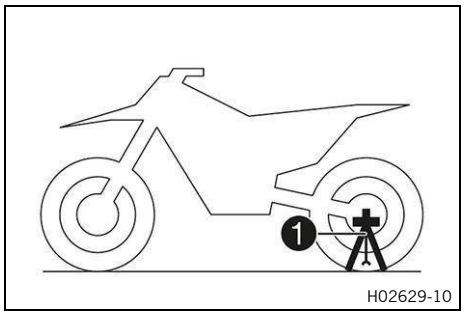

(SX-F models)

– Remove the motorcycle from the lift stand.
– Remove the lift stand.
– To park the motorcycle, insert plug-in stand ❶ into the left side of the wheel spindle.

The plug-in stand must be removed before riding.

Plug-in stand (A46029094000)

Note
The plug-in stand is included in the scope of supply.

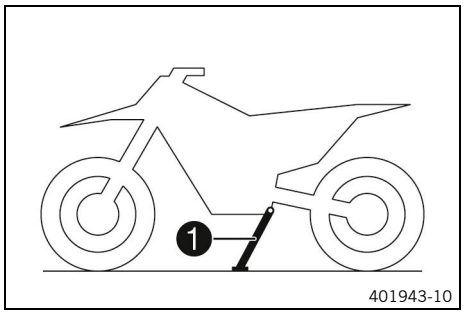

401943-10

(XC–F)

– Remove the motorcycle from the lift stand.
– Remove the lift stand.
– To park the motorcycle, press side stand ❶ to the ground with your foot and lean the motorcycle on it.

When you are riding, the side stand must be folded up and secured with the rubber band.

11.3 Bleeding the fork legs

Preparatory work

– Raise the motorcycle with a lift stand. (p. 61)

Main work

(SX-F models)

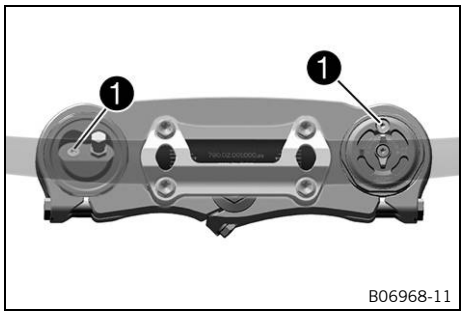

B06968-11

– Loosen bleeder screw ❶.
  ✓ Any excess pressure escapes from the inner fork.
– Tighten the bleeder screw.

(XC–F)

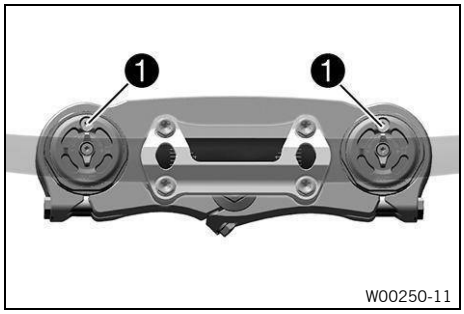

W00250-11

– Loosen bleeder screw ❶.
  ✓ Any excess pressure escapes from the inner fork.
– Tighten the bleeder screw.

Reworking

– Remove the motorcycle from the lift stand. (p. 61)

11.4 Cleaning the dust boots of the fork legs

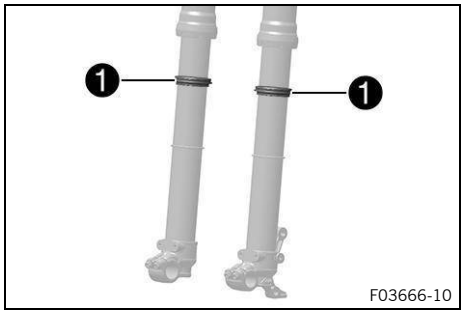

Preparatory work

– Raise the motorcycle with a lift stand. (p. 61)
– Remove the fork protector. (p. 63)

Main work

– Push dust boot ❶ downward on both fork legs.

Note
The dust boots should remove dust and coarse dirt particles from the inner fork tubes. Over time, dirt can accumulate behind the dust boots. If this dirt is not removed, the oil seals behind can start to leak.

WARNING
Danger of accidents Oil, grease or wax on the brake discs reduces the brake action.
– Always keep the brake discs free of oil, fat and wax.
– Clean the brake discs with brake cleaner when necessary.

– Clean and oil the dust boots and the inner fork tube of both fork legs.

Universal oil spray (p. 175)

– Press the dust boots back into their installation position.
– Remove excess oil.

Reworking

– Install the fork protector. (p. 64)
– Remove the motorcycle from the lift stand. (p. 61)

11.5 Removing the fork protector

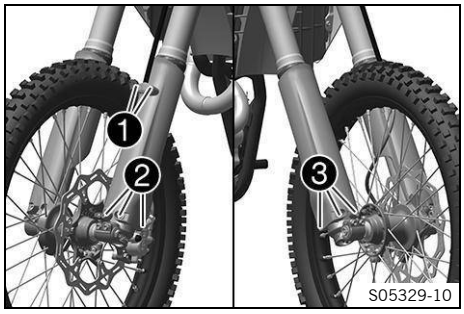

– Remove screw ❶ and take off the clamp.
– Remove screws ❷ and take off the left fork protector.
– Remove screws ❸ and take off the right fork protector.

11.6 Installing the fork protector

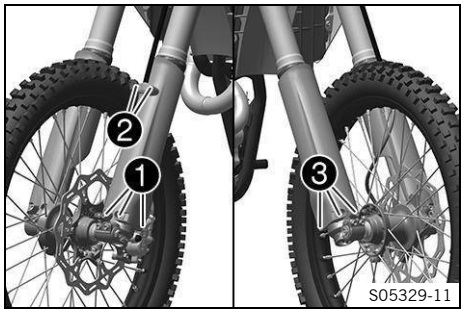

– Position the fork protector on the left fork leg.
– Mount and tighten screws ❶.

Remaining screws on chassis	
M6	10 Nm (7.4 ft·lb$_f$)

– Position the brake line and the clamp.
– Mount and tighten screws ❷.

Remaining screws on chassis	
EJOT PT® – K60×25 – Z	2 Nm (1.5 ft·lb$_f$)

– Position the fork protector on the right fork leg.
– Mount and tighten screws ❸.

Remaining screws on chassis	
M6	10 Nm (7.4 ft·lb$_f$)

11.7 Removing the skid plate (XC–F)

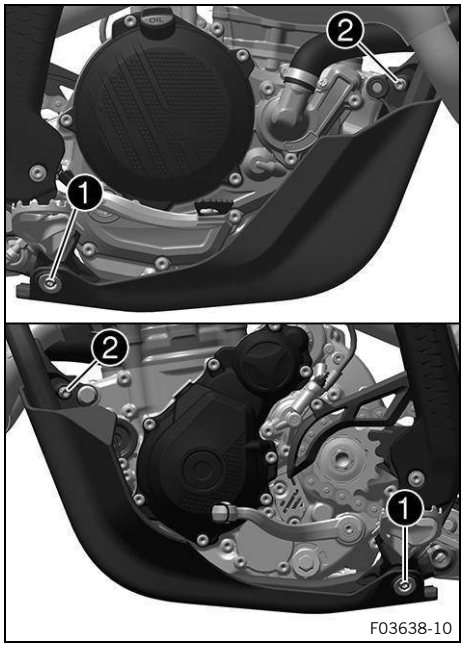

– Remove screws ❶ and bushings.
– Remove screws ❷. Take off the skid plate.

11.8 Installing the skid plate (XC–F)

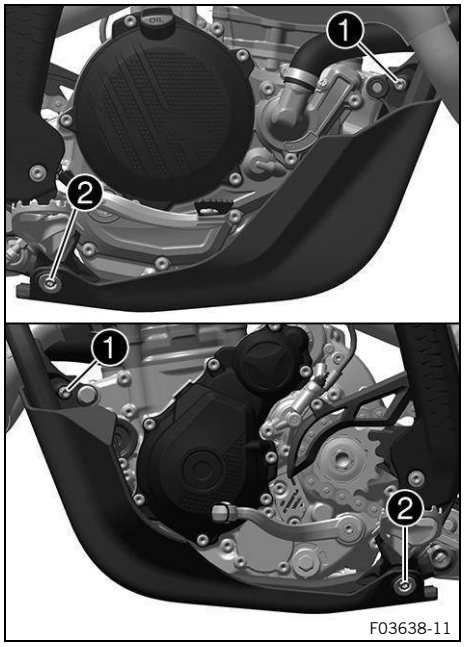

– Position the skid plate on the frame.
– Mount screws ❶, but do not tighten yet.

Remaining screws on chassis	
M6	10 Nm (7.4 ft·lb$_f$)

– Mount screws ❷ with bushings, but do not tighten yet.

Remaining screws on chassis	
M6	10 Nm (7.4 ft·lb$_f$)

✓ The skid plate is directed evenly toward the front.
– Tighten all the screws of the skid plate.

Remaining screws on chassis	
M6	10 Nm (7.4 ft·lb$_f$)

◆

11.9 Removing the frame protector

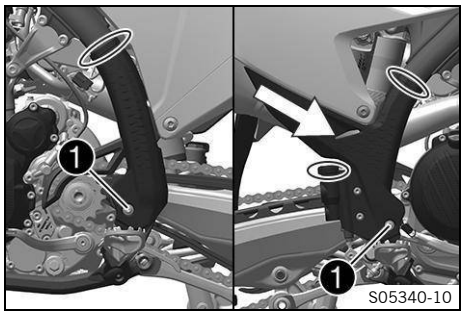

– Remove the cable ties.
– Remove screws ❶ and bushings.
– Take off the left frame protector.
– Push the right frame protector to the front and take off at the bottom.

◆

11.10 Installing the frame protector

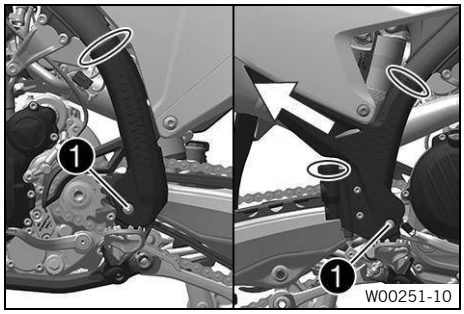

– Position the left frame protector.
– Insert the right frame protector from below and push it to the rear.
– Mount screw ❶ and bushing and tighten.

Screw, frame protector	
M5×10	3 Nm (2.2 ft·lb$_f$)

– Secure the frame protector with cable ties.

Turn the head of the cable tie so far back that it does not touch any other components.

◆

11.11 Removing the fork legs

Preparatory work

– Raise the motorcycle with a lift stand. (p. 61)
– Remove the front wheel. (p. 110)

Main work

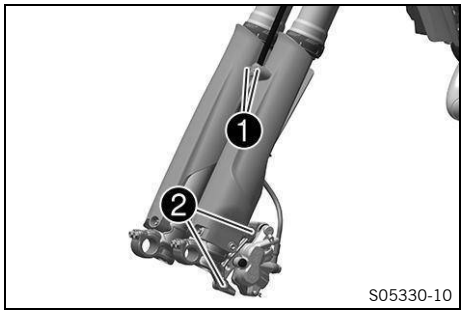

– Remove screw ❶ and take off the clamp.
– Remove screws ❷ and take off the brake caliper.
– Allow the brake caliper and the brake line to hang loosely to the side.

> Do not actuate the hand brake lever when the front wheel is removed.

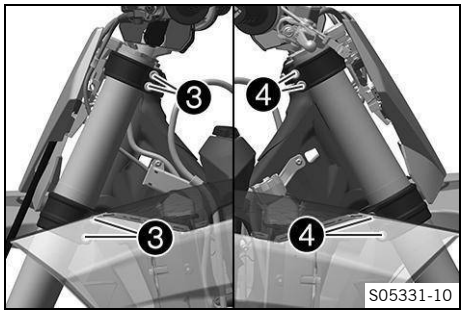

– Loosen screws ❸. Remove the left fork leg.
– Loosen screws ❹. Remove the right fork leg.

11.12 Installing the fork legs

Main work

(SX-F models)

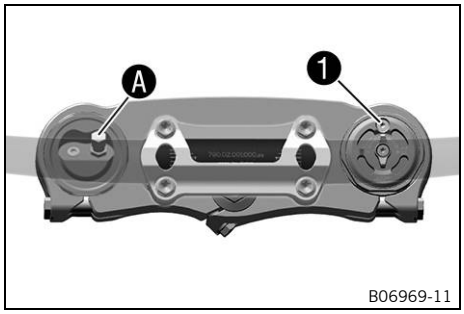

– Position the fork legs.
  ✓ Bleed screw ❶ of the right fork leg is positioned to the front.
  ✓ Valve Ⓐ of the left fork leg faces the front.

> **Note**
> Grooves are milled into the side of the upper end of the fork legs. The second milled groove (from the top) must be flush with the upper edge of the upper triple clamp.
> The air suspension is located in the left fork leg. The pressure and rebound damping is located in the right fork leg.

(XC–F)

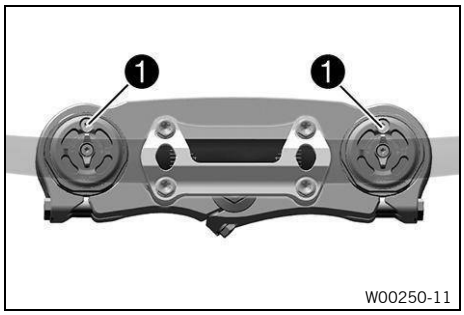

– Position the fork legs.

✓ Bleeder screws ❶ of the fork legs are positioned toward the front.

Note

Grooves are milled into the side of the upper end of the fork legs. The second milled groove (from the top) must be flush with the upper edge of the upper triple clamp.

The pressure and rebound damping is located in the left and right fork leg.

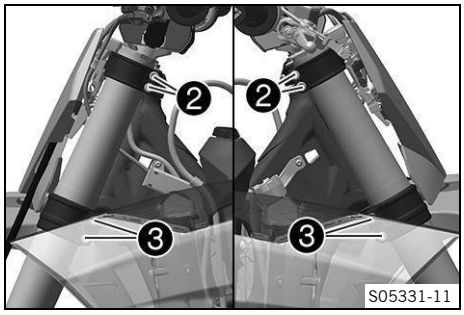

– Tighten screws ❷.

Screw, top triple clamp	
M8×40	17 Nm (12.5 ft·lb$_f$)

– Tighten screws ❸.

Screw, bottom triple clamp	
M8×50	12 Nm (8.9 ft·lb$_f$)

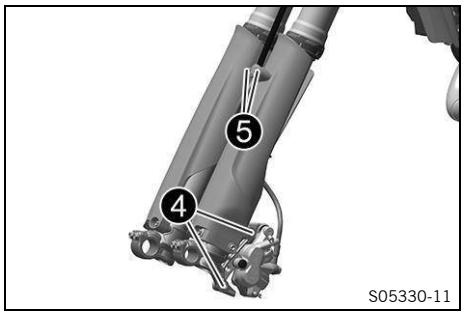

– Position the brake caliper.

– Mount and tighten screws ❹.

Screw, front brake caliper	
M8×30	25 Nm (18.4 ft·lb$_f$) **Loctite® 243**

– Position the brake line and the clamp.

– Mount and tighten screws ❺.

Remaining screws on chassis	
EJOT PT® – K60×25 – Z	2 Nm (1.5 ft·lb$_f$)

Reworking

– Install the front wheel. (p. 111)

11.13 Removing the lower triple clamp

Preparatory work

– Raise the motorcycle with a lift stand. (p. 61)

– Remove the front wheel. (p. 110)

– Remove the fork legs. (p. 66)

– Remove the number plate. (p. 73)

– Remove the front top fender. (p. 73)

– Remove the handlebar pad.

Main work

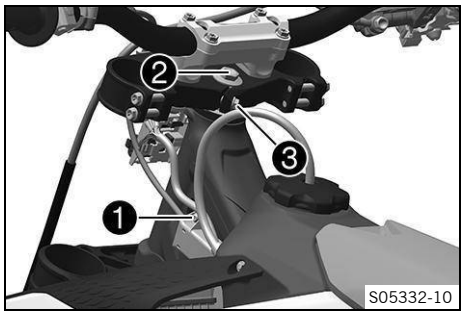

- Remove screw ❶.
- Detach the wiring harness.
- Remove screw ❷.
- Remove screw ❸.
- Take off the upper triple clamp with the handlebar and place to one side.

Protect the components against damage by covering them.
Do not kink the cables or lines.

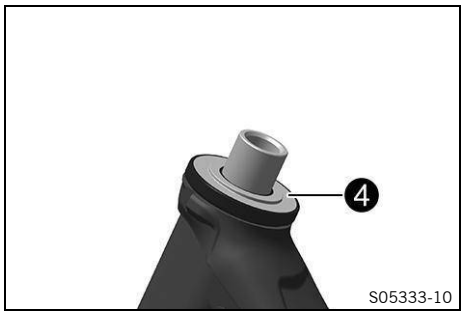

- Remove steering head seal ❹.
- Remove the steering stem from the lower triple clamp.
- Remove the upper steering head bearing.

11.14 Installing the lower triple clamp

Main work

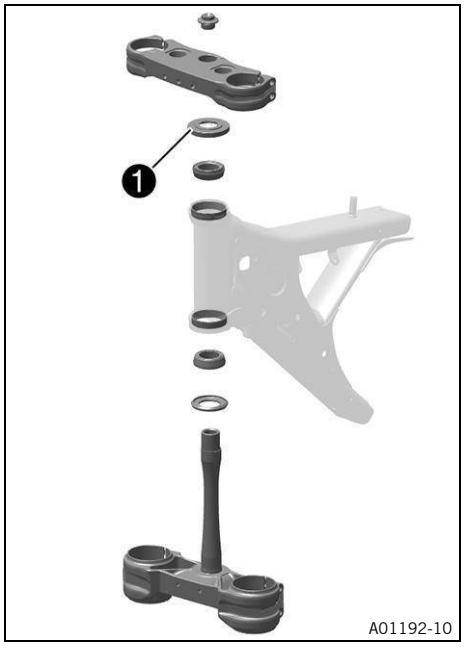

- Clean the bearing and sealing elements, check for damage, and grease.

High viscosity grease (p. 175)

- Insert the lower triple clamp with the steering stem.
- Mount the upper steering head bearing.
- Push on steering head seal ❶.

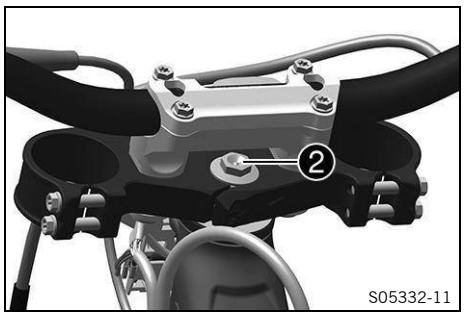

– Position the upper triple clamp and handlebar.
– Mount screw ❷, but do not tighten yet.

Screw, top steering head	
M20×1.5	12 Nm (8.9 ft·lb$_f$)

(SX-F models)

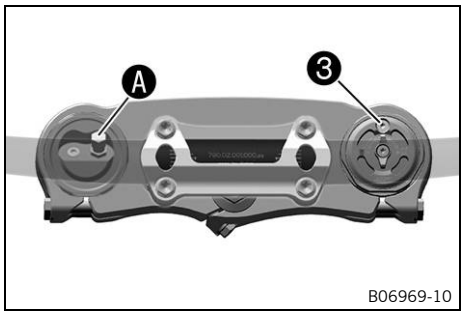

– Position the fork legs.
  ✓ Bleed screw ❸ of the right fork leg is positioned to the front.
  ✓ Valve Ⓐ of the left fork leg faces the front.

Note
Grooves are milled into the side of the upper end of the fork legs. The second milled groove (from the top) must be flush with the upper edge of the upper triple clamp.
The air suspension is located in the left fork leg. The pressure and rebound damping is located in the right fork leg.

(XC–F)

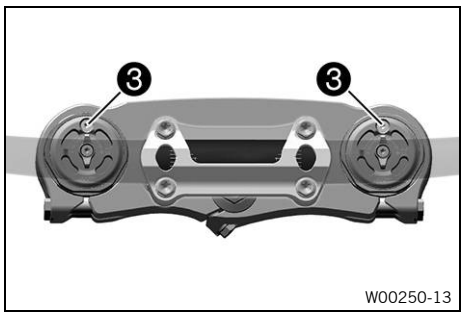

– Position the fork legs.
  ✓ Bleeder screws ❸ of the fork legs are positioned toward the front.

Note
Grooves are milled into the side of the upper end of the fork legs. The second milled groove (from the top) must be flush with the upper edge of the upper triple clamp.
The pressure and rebound damping is located in the left and right fork leg.

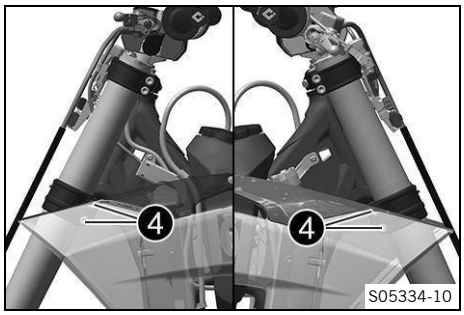

– Tighten screws ❹.

Screw, bottom triple clamp	
M8×50	12 Nm (8.9 ft·lb$_f$)

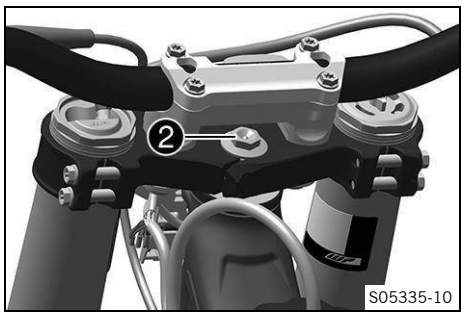

– Tighten screw ❷.

Screw, top steering head	
M20×1.5	12 Nm (8.9 ft·lb$_f$)

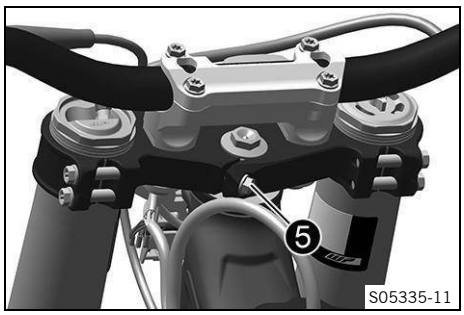

– Mount and tighten screw ❺.

Screw, upper steering stem	
M8×25	20 Nm (14.8 ft·lb$_f$) **Loctite® 243**

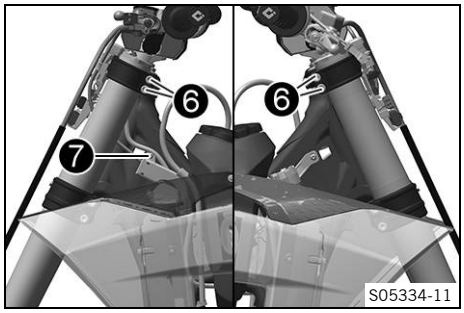

– Using a plastic hammer, tap lightly on the upper triple clamp to avoid stresses.
– Tighten screws ❻.

Screw, top triple clamp	
M8×40	17 Nm (12.5 ft·lb$_f$)

– Secure the wiring harness with the left cable bracket.
– Mount and tighten screw ❼.

Remaining screws on chassis	
M5	5 Nm (3.7 ft·lb$_f$)

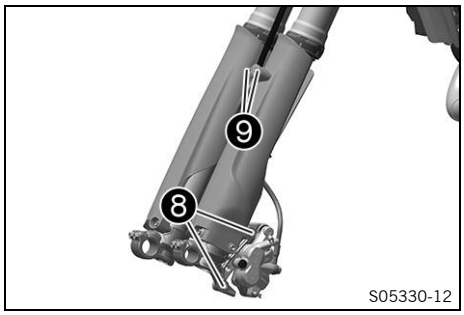

– Position the brake caliper.
– Mount and tighten screws ❽.

Screw, front brake caliper	
M8×30	25 Nm (18.4 ft·lb$_f$) **Loctite® 243**

– Position the brake line and the clamp.
– Mount and tighten screws ❾.

Remaining screws on chassis	
EJOT PT® – K60×25 – Z	2 Nm (1.5 ft·lb$_f$)

Reworking

– Install the front top fender. (p. 74)
– Mount the handlebar pad.
– Mount the number plate. (p. 73)
– Install the front wheel. (p. 111)

– Check the wiring harness, cables, and brake and clutch lines for freedom of movement and correct routing.
– Check the steering head bearing play. (p. 71)
– Remove the motorcycle from the lift stand. (p. 61)

11.15 Checking the steering head bearing play

WARNING

Danger of accidents Incorrect steering head bearing play can impair the handling characteristic and damage components.

– Correct incorrect steering head bearing play immediately.

Note

If the vehicle is operated for a lengthy period with play in the steering head bearing, the bearings and the bearing seats in the frame can become damaged.

Preparatory work

– Raise the motorcycle with a lift stand. (p. 61)

Main work

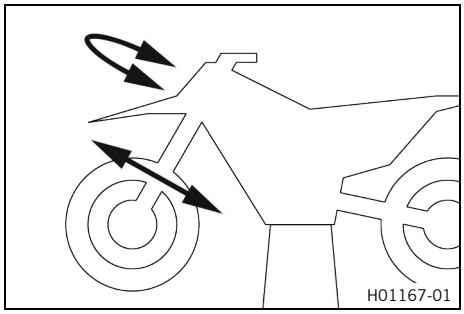

– Move the handlebar to the straight-ahead position. Move the fork legs to and fro in the direction of travel.

Play should not be detectable on the steering head bearing.

» If there is detectable play:
  – Adjust the steering head bearing play. (p. 72)

– Move the handlebar back and forth over the entire steering range.

It must be possible to move the handlebar easily over the entire steering range. There should be no detectable detent positions.

» If detent positions are detected:
  – Adjust the steering head bearing play. (p. 72)
  – Check the steering head bearing and adjust if necessary.

Reworking

– Remove the motorcycle from the lift stand. (p. 61)

11.16 Adjusting the steering head bearing play

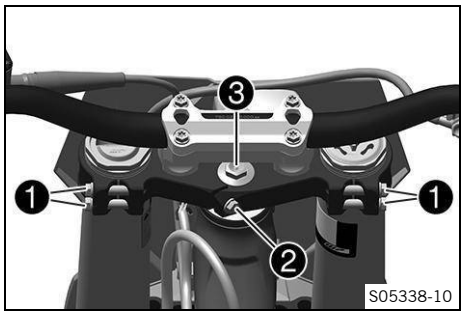

Preparatory work

– Raise the motorcycle with a lift stand. (p. 61)
– Remove the handlebar pad.

Main work

– Loosen screws ❶.
– Remove screw ❷.
– Loosen and retighten screw ❸.

Screw, top steering head	
M20×1.5	12 Nm (8.9 ft·lb$_f$)

– Using a plastic hammer, tap lightly on the upper triple clamp to avoid stresses.
– Mount and tighten screw ❷.

Screw, upper steering stem	
M8×25	20 Nm (14.8 ft·lb$_f$) **Loctite® 243**

– Tighten screws ❶.

Screw, top triple clamp	
M8×40	17 Nm (12.5 ft·lb$_f$)

Reworking

– Check the steering head bearing play. (p. 71)
– Remove the motorcycle from the lift stand. (p. 61)
– Mount the handlebar pad.

11.17 Lubricating the steering head bearing

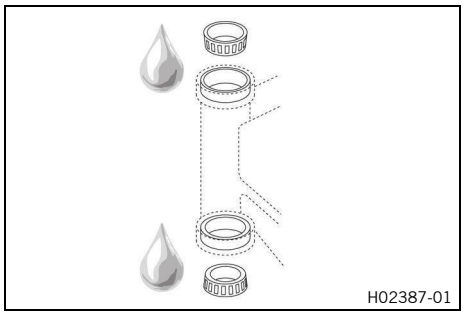

– Remove the lower triple clamp. (p. 67)
– Install the lower triple clamp. (p. 68)

Note
The steering head bearing is cleaned and lubricated in the course of removal and installation of the lower triple clamp.

11.18 Removing the number plate

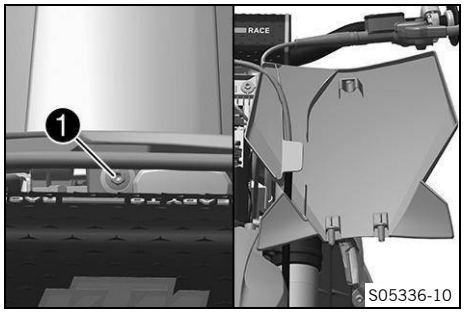

– Remove screw ❶.
– Unhook the number plate from the brake line and remove it.

11.19 Mounting the number plate

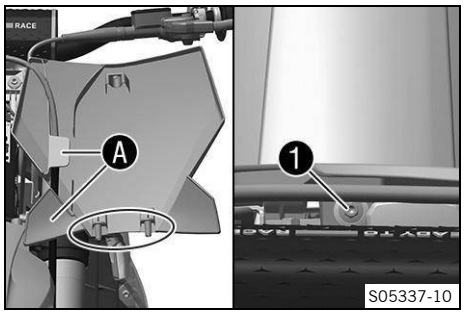

– Position the brake line in holders Ⓐ on the number plate.
– Position the number plate.
– Mount and tighten screw ❶.

Remaining screws on chassis	
EJOT PT®	2 Nm (1.5 ft·lb$_f$)

✓ The holding lugs engage in the fender.

11.20 Removing the front top fender

Preparatory work

– Remove the number plate. (p. 73)

Main work

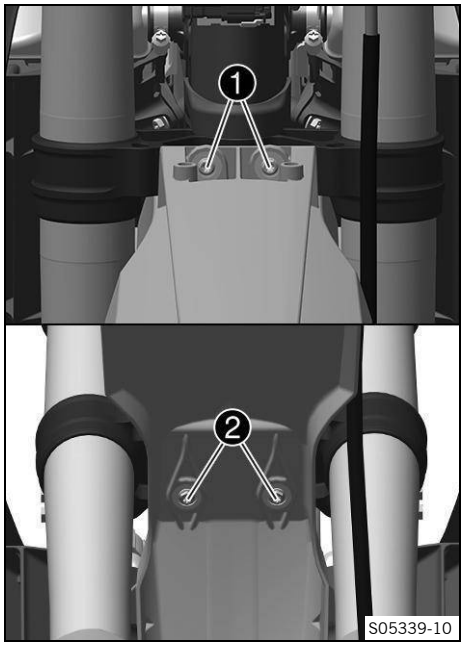

– Remove screws ❶ and ❷.
– Remove the front fender.

11.21 Installing the front top fender

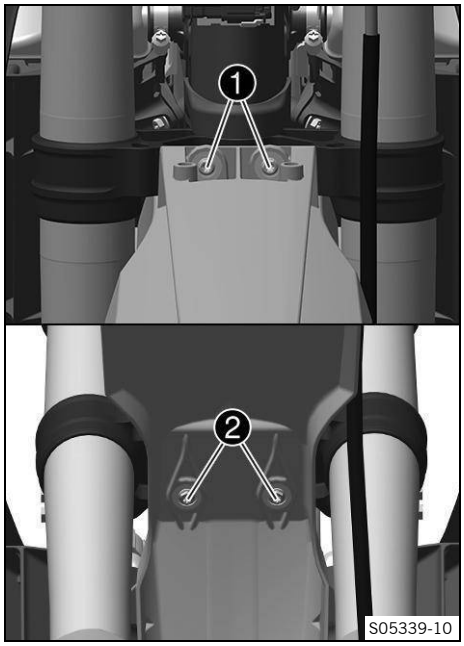

Main work

– Position the front fender.
– Mount and tighten screws ❶ and ❷.

Remaining screws on chassis	
M6	10 Nm (7.4 ft·lb$_f$)

Reworking

– Mount the number plate. (p. 73)

11.22 Removing the shock absorber

Preparatory work

– Remove the muffler. (p. 83)
– Remove the frame protector. (p. 65)
– Raise the motorcycle with a lift stand. (p. 61)

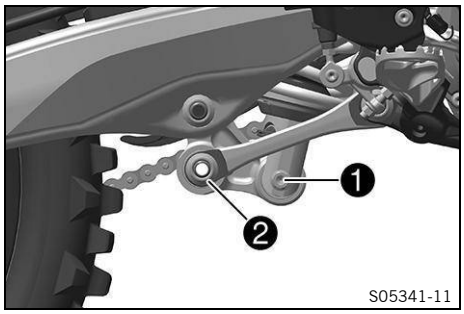

Main work

– Remove screw ❶.
– Remove screw connection ❷.

Tip
Raise the swingarm slightly to be able to remove the screws more easily.

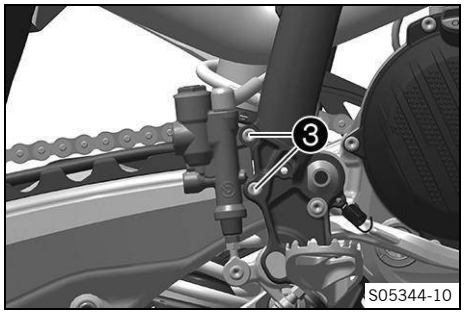

– Remove screws ❸.
– Pull brake cylinder off of the push rod.

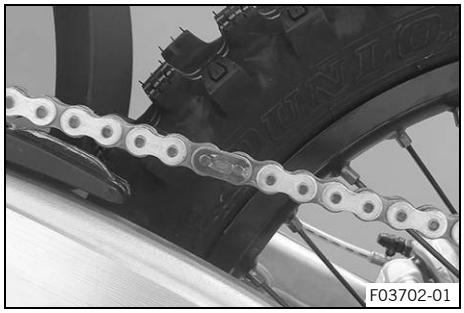

– Remove the connecting link on the chain.
– Take off the chain.

Protect the components against damage by covering them.

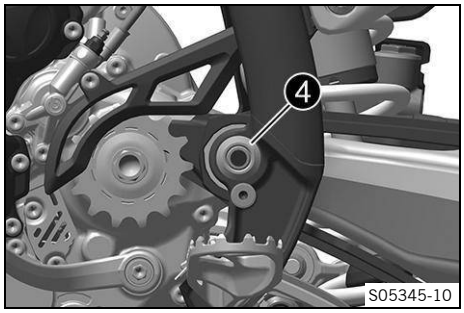

– Remove nut ❹ and the swingarm pivot.
– Push the swingarm back and secure it against falling over.

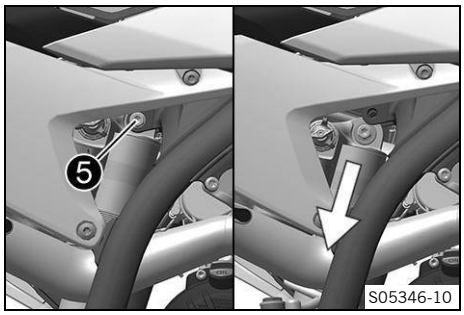

– Hold the shock absorber and remove screw ❺.
– Remove the shock absorber carefully at the bottom.

11.23 Installing the shock absorber

Main work

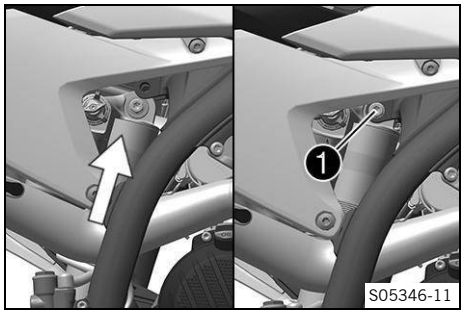

- Carefully position the shock absorber into the vehicle from the bottom.
- Mount and tighten screw ❶.

Top shock absorber screw	
M10×52	60 Nm (44.3 ft·lb$_f$) **Loctite® 2701**

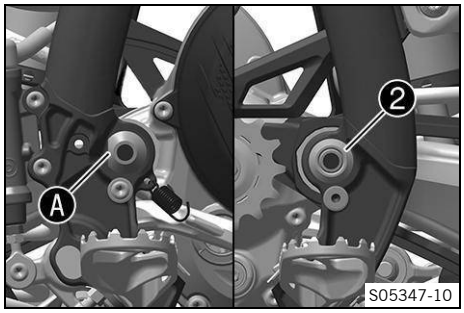

- Position the swingarm and fit the swingarm pivot.

Pay attention to flat area Ⓐ.

- Mount and tighten nut ❷.

Nut, swingarm pivot	
M16×1.5	100 Nm (73.8 ft·lb$_f$)

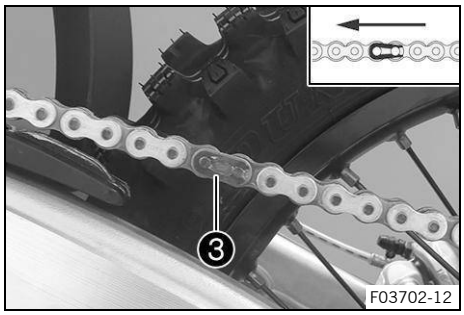

- Mount the chain.
- Connect the chain with connecting link ❸.

The closed side of the master link clip must face in the direction of travel.

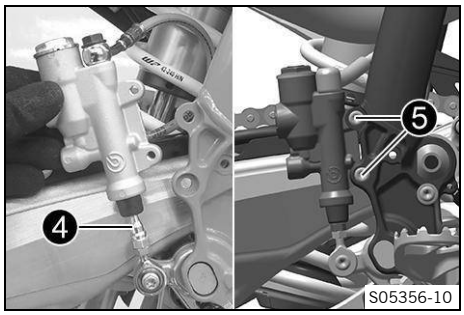

- Position the brake cylinder.

Ensure that the dust boot is properly seated.

✓ Push rod ❹ engages in the brake cylinder.

- Mount and tighten screws ❺.

Remaining screws on chassis	
M6	10 Nm (7.4 ft·lb$_f$)

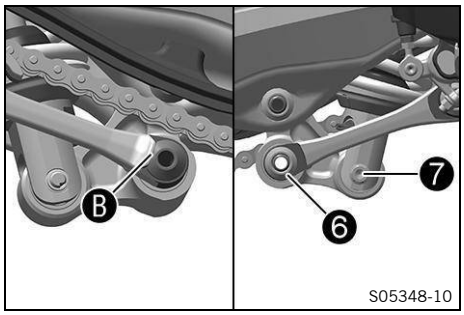

- Position the power valve control lever and linkage lever.
- Mount and tighten screw connection ❻.

Nut, linkage lever on angle lever	
M14×1.5	60 Nm (44.3 ft·lb$_f$)

Pay attention to flat area Ⓑ.

Tip
Raise the swingarm slightly to be able to mount the screw more easily.

– Mount and tighten screw ❼.

Bottom shock absorber screw	
M10×52	60 Nm (44.3 ft·lb$_f$) **Loctite® 2701**

Reworking

– Check the free travel of the brake pedal. (p. 104)
– Remove the motorcycle from the lift stand. (p. 61)
– Install the frame protector. (p. 65)
– Install the muffler. (p. 83)

11.24 Removing the seat

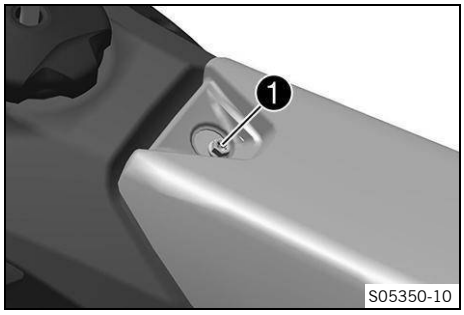

– Remove screw ❶.

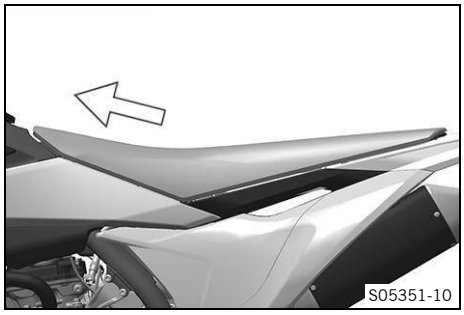

– Raise seat, pull it toward the fuel tank and take it off.

11.25 Mounting the seat

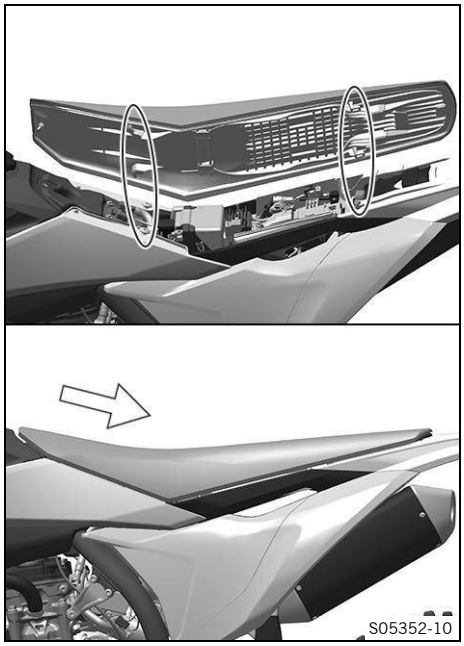

– Attach the seat to the collar bushings at the front and simultaneously push it back.
  ✓ The holding lugs engage in the recesses at the back.
– Make sure the seat is latched in place correctly.

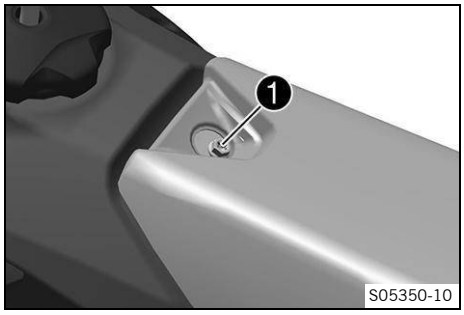

– Mount and tighten screw ❶.

Screw, seat installation	
M6×25	8 Nm (5.9 ft·lb$_f$)

11.26 Removing air filter box cover

Condition: Air filter box cover secured

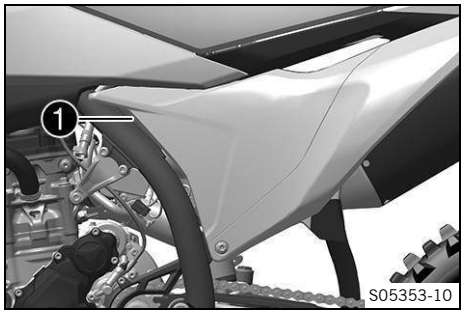

– Remove screw ❶.

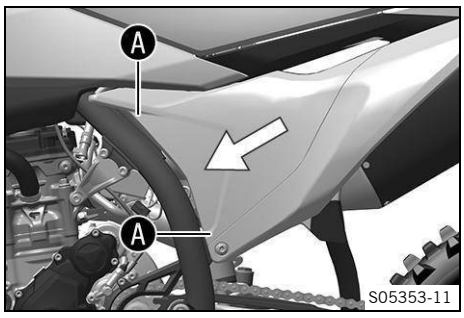

– Pull off the air filter box cover in areas A and push it sideways and forward.
– Remove air filter box cover.

Condition: Air filter box cover not secured

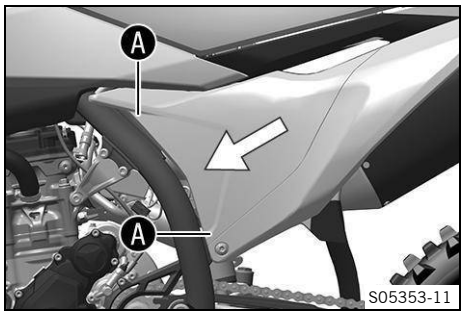

– Pull off the air filter box cover in areas A and push it sideways and forward.
– Remove air filter box cover.

11.27 Installing air filter box cover

Condition: Air filter box cover secured

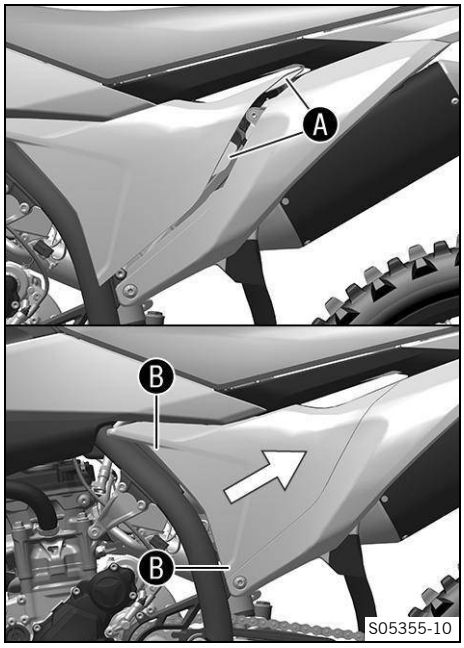

– Attach the air filter box cover in areas A and clip in areas B.

Note
An air filter box cover with openings for greater airflow and a more direct response is included.

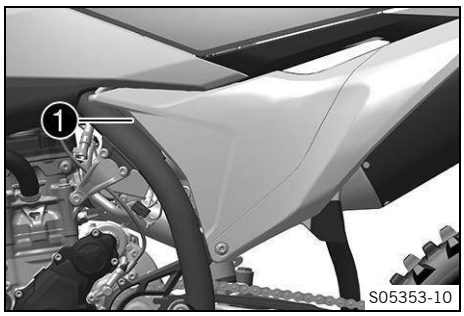

– Mount and tighten screw ❶.

Screw, air filter box cover	
EJOT PT® – K60×20 – Z	5 Nm (3.7 ft·lb$_f$)

Condition: Air filter box cover not secured

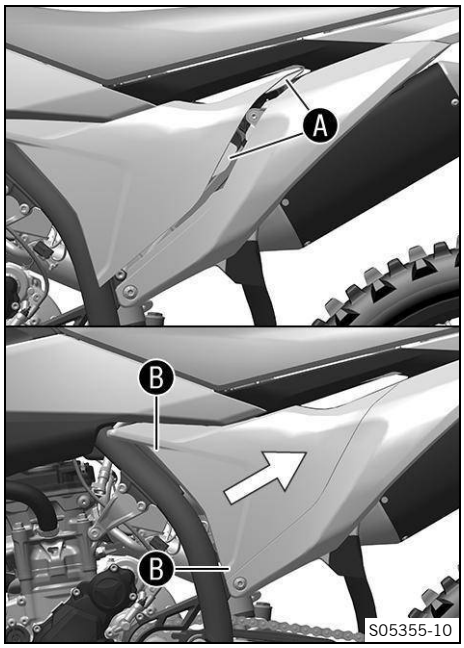

– Attach the air filter box cover in areas Ⓐ and clip in areas Ⓑ.

Note
An air filter box cover with openings for greater airflow and a more direct response is included.

11.28 Removing the air filter

NOTE
Engine failure Unfiltered intake air has a negative effect on the service life of the engine.
Dust and dirt can enter the engine if there is no air filter or if the air filter is mounted incorrectly.
– Only operate the vehicle if an air filter is correctly fitted.

NOTE
Environmental hazard Hazardous substances cause environmental damage.
– Dispose of oils, grease, filters, fuel, cleaning agents, brake fluid, etc. correctly and in accordance with the applicable regulations.

Preparatory work
– Remove air filter box cover. (p. 78)

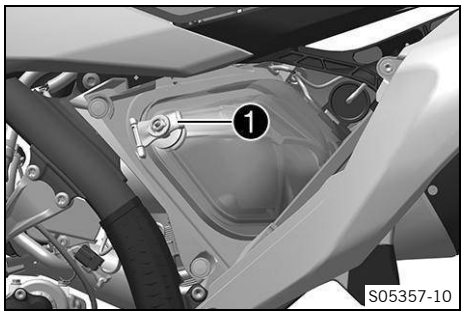

Main work

– Detach tab ❶.
– Remove air filter with air filter support.
– Remove the air filter with the air filter support.

11.29 Cleaning the air filter and air filter box

NOTE

Environmental hazard Hazardous substances cause environmental damage.

– Dispose of oils, grease, filters, fuel, cleaning agents, brake fluid, etc. correctly and in accordance with the applicable regulations.

Preparatory work

– Remove air filter box cover. (p. 78)
– Remove the air filter. (p. 80)

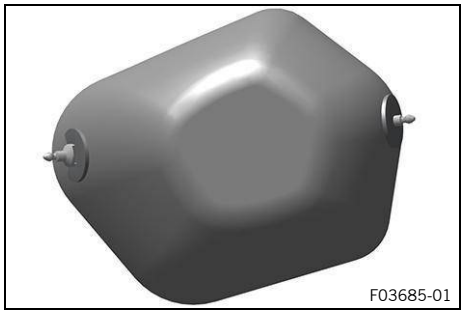

Main work

– Wash the air filter thoroughly in special cleaning liquid and allow it to dry properly.

Do not clean the air filter with fuel or petroleum as these substances will damage the foam rubber.
Only press the air filter to dry it, do not wring it out.

Air filter cleaning agent (p. 178)

– Oil the dry air filter with a high-grade air filter oil.

Oil for foam air filter (p. 176)

– Clean the air filter box.
– Clean the intake flange and check it for damage and that it is firmly seated.

Reworking

– Install the air filter. (p. 82)
– Install the air filter box cover. (p. 79)

11.30 Installing the air filter

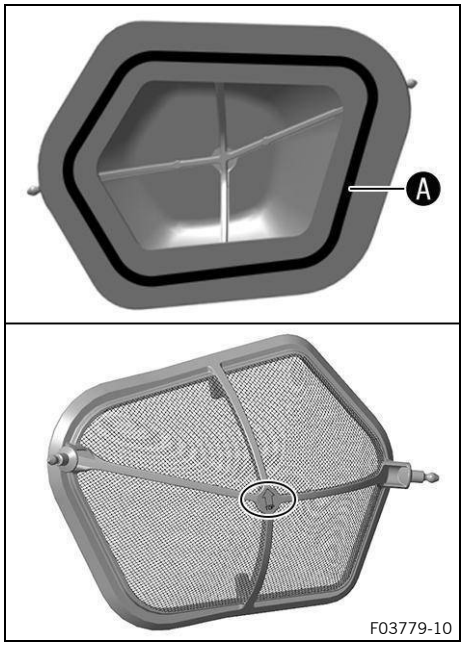

Main work

– Mount the clean air filter on the air filter support.

The marking on the air filter support must face upwards.

– Grease the air filter in area A.

Long-life grease (p. 175)

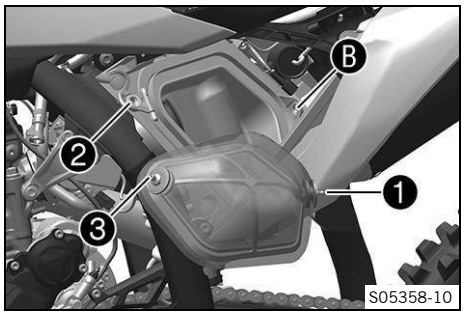

– Insert air filter and position retaining pin 1 in bushing B.

The marking on the air filter must face upwards.

– Attach tab 2.

✓ Retaining pin 3 is secured by tab 2.

Note
If the air filter is not mounted correctly, dust and dirt may enter the engine and result in damage.

Reworking

– Install the air filter box cover. (p. 79)

11.31 Preparing the air filter box cover for securing

Preparatory work

– Remove air filter box cover. (p. 78)

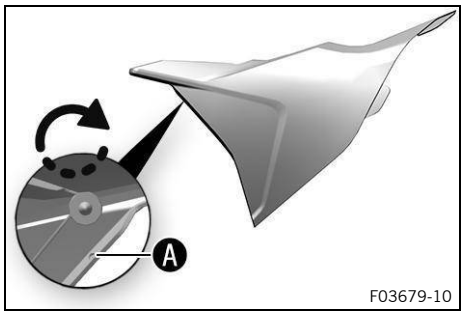

Main work

– Drill a hole at marking A.

Diameter	6 mm (0.24 in)

Reworking

– Install the air filter box cover. (p. 79)

11.32 Removing the muffler

WARNING

Danger of burns The exhaust system gets hot when the vehicle is driven.

– Allow the exhaust system to cool down before performing any work on the vehicle.

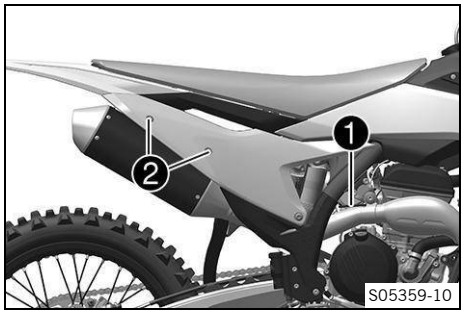

– Detach spring 1.

Spring hook (50305017000C1)

– Remove screws 2 with the washers and take off the main silencer.

11.33 Installing muffler

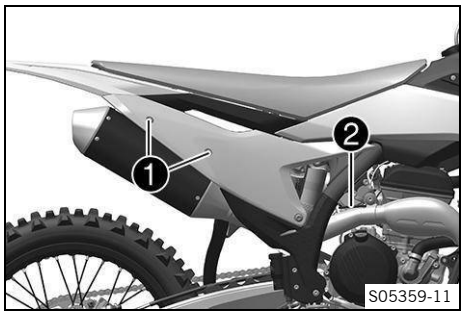

– Position the main silencer.

– Mount screws 1 with washers, but do not tighten yet.

Remaining screws on chassis	
M6	10 Nm (7.4 ft·lb$_f$)

– Attach spring 2.

Spring hook (50305017000C1)

– Tighten screws 1.

Remaining screws on chassis	
M6	10 Nm (7.4 ft·lb$_f$)

11.34 Changing the damping material on the main silencer

WARNING

Danger of burns The exhaust system gets hot when the vehicle is driven.

– Allow the exhaust system to cool down before performing any work on the vehicle.

Note

Over time, the damping material fibers disappear, and the main silencer “burns out”.
Not only does this make the noise level higher, but the performance characteristics also change.

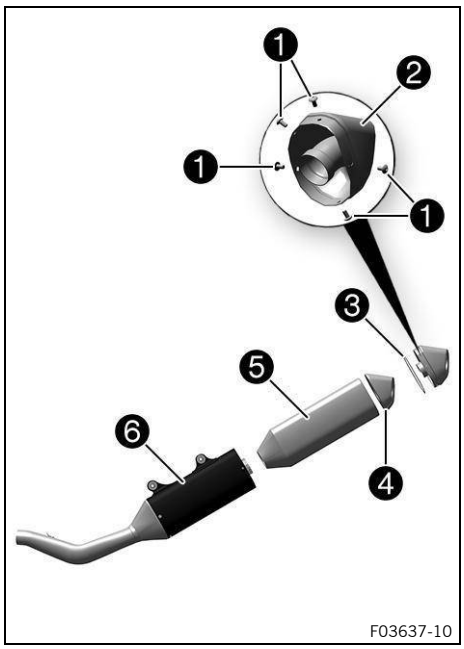

Preparatory work

– Remove the muffler. (p. 83)

Main work

– Remove the screws ❶ on the main silencer.
– Take off silencer cap ❷ and O-ring ❸.
– Pull damping material ❹ out of the silencer cap.
– Pull damping material ❺ off the inner tube.
– Clean the parts that need to be reinstalled and check for damage.
– Mount new damping material ❺ on the inner tube.
– Position new damping material ❹ in the silencer cap.
– Slide outer tube ❻ over the inner tube with the new damping material.
– Slide O-ring and silencer cap onto the outer tube.
– Mount and tighten screws ❶.

Remaining screws on chassis	
M5	5 Nm (3.7 ft·lb_f)

Reworking

– Install the muffler. (p. 83)

11.35 Removing the fuel tank

DANGER

Fire hazard Fuel is highly flammable.

The fuel in the fuel tank expands when warm and can escape if overfilled.

– Do not refuel the vehicle in the vicinity of open flames, glowing, or smoldering objects.
– Make sure that nobody smokes in the vicinity of the vehicle during the refueling process.
– Switch off the engine for refueling.
– Make sure that no fuel is spilled; particularly not on hot parts of the vehicle.
– If any fuel is spilled, wipe it up immediately.
– Do not overfill the fuel tank.

WARNING

Danger of poisoning Fuel is harmful to health.

- Do not allow fuel to come into contact with skin, eyes, or clothing.
- Consult a doctor immediately if fuel has been ingested.
- Do not inhale fuel vapors.
- Rinse the affected area immediately with plenty of water in the event of contact with skin.
- Rinse eyes thoroughly with water and consult a doctor immediately if fuel comes into contact with eyes.
- If fuel spills on to your clothing, change the clothing.
- Store fuel properly in a suitable container and keep out of the reach of children.

Preparatory work

- Remove the seat. (p. 77)

Main work

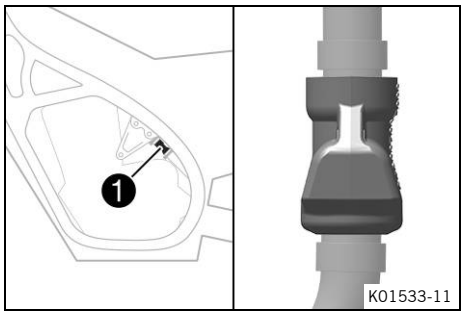

- Remove protection cap ❶ of the fuel line.

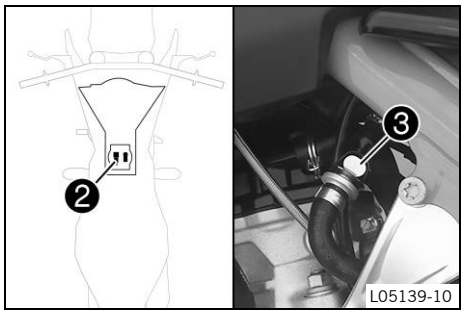

- Unplug socket connector ❷ of the fuel pump.
- Clean quick release coupling ❸ thoroughly with compressed air.

Dirt must not enter into the fuel line. Dirt in the fuel line clogs the injector!

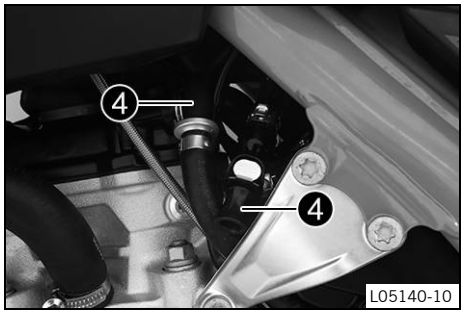

- Disconnect the quick-lock coupling.

Note
Remaining fuel may flow out of the fuel hose.

- Mount wash cap set ❹.

Wash cap set (81212016100)

- Pull the fuel tank vent hose off the fuel tank cap.

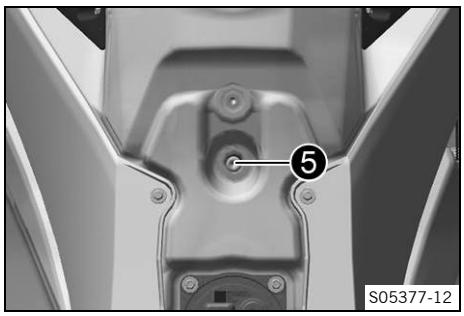

– Remove screw ❺ with the rubber bushing.

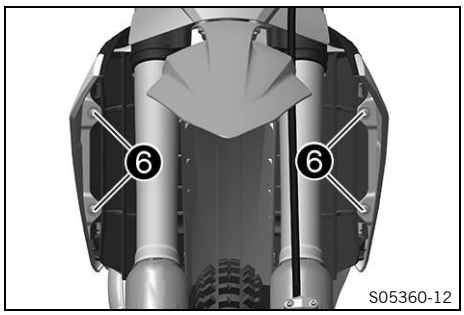

– Remove screws ❻ with the collar bushings.

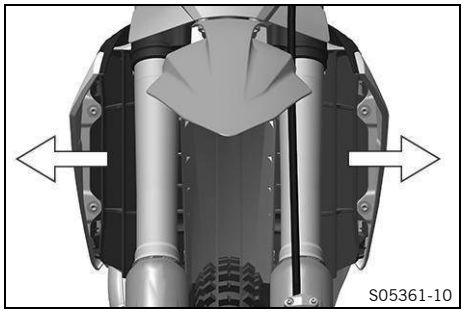

– Pull both spoilers laterally off the radiator and lift off the fuel tank.

11.36 Installing the fuel tank

DANGER

Fire hazard Fuel is highly flammable.

The fuel in the fuel tank expands when warm and can escape if overfilled.

- Do not refuel the vehicle in the vicinity of open flames, glowing, or smoldering objects.
- Make sure that nobody smokes in the vicinity of the vehicle during the refueling process.
- Switch off the engine for refueling.
- Make sure that no fuel is spilled; particularly not on hot parts of the vehicle.
- If any fuel is spilled, wipe it up immediately.
- Do not overfill the fuel tank.

WARNING

Danger of poisoning Fuel is harmful to health.

- Do not allow fuel to come into contact with skin, eyes, or clothing.
- Consult a doctor immediately if fuel has been ingested.
- Do not inhale fuel vapors.
- Rinse the affected area immediately with plenty of water in the event of contact with skin.
- Rinse eyes thoroughly with water and consult a doctor immediately if fuel comes into contact with eyes.
- If fuel spills on to your clothing, change the clothing.
- Store fuel properly in a suitable container and keep out of the reach of children.

Main work

– Check the throttle cable routing. (p. 93)

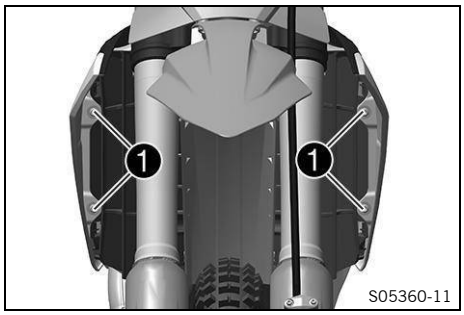

– Position the fuel tank and fit both spoilers to the side of the radiator.

Make sure that no wires or cables are trapped or damaged.

– Attach the fuel tank vent hose to the fuel tank cap.
– Mount and tighten screws ❶ with the collar bushings.

Screw, fuel tank spoiler on radiator	
M6×12	6 Nm (4.4 ft·lb$_f$)

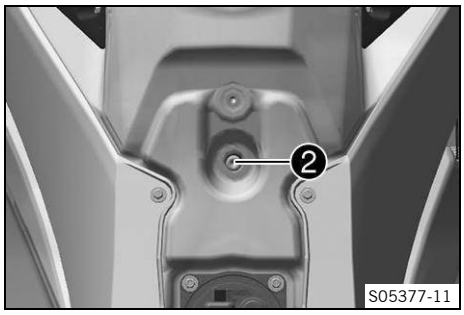

– Mount and tighten screw ❷ with the rubber bushing.

Remaining screws on chassis	
M6	10 Nm (7.4 ft·lb$_f$)

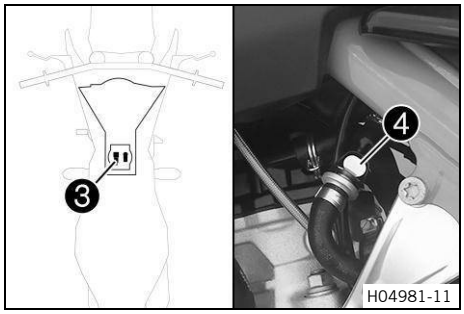

– Plug in fuel pump socket connector ❸.
– Remove the wash cap set. Clean the quick release coupling thoroughly with compressed air.

Dirt must not enter into the fuel line. Dirt in the fuel line clogs the injector!

– Spray silicone spray onto a lint-free cleaning cloth and lightly lubricate the O-ring of the quick-lock coupling.

Silicone spray (p. 176)

– Join quick-lock coupling ❹ of the fuel line.

Route the wire and fuel line at a safe distance from the exhaust system.

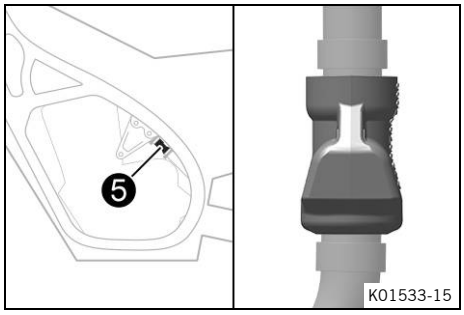

– Mount protection cap ❺ of the fuel line.

Reworking

– Mount the seat. (p. 78)

11.37 Checking the chain for dirt

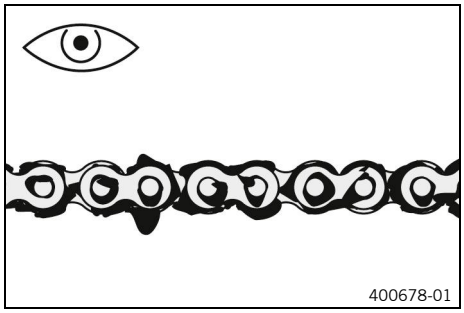

– Check the chain for coarse dirt accumulation.
  » If the chain is very dirty:
    – Clean the chain. (p. 88)

11.38 Cleaning the chain

WARNING
Danger of accidents Oil, grease or wax on the brake discs reduces the brake action.
– Always keep the brake discs free of oil, fat and wax.
– Clean the brake discs with brake cleaner when necessary.

WARNING
Danger of accidents Lubricants on the tires reduces the road grip.
– Remove lubricants from the tires using a suitable cleaning agent.

NOTE
Environmental hazard Hazardous substances cause environmental damage.
– Dispose of oils, grease, filters, fuel, cleaning agents, brake fluid, etc. correctly and in accordance with the applicable regulations.

Note
The service life of the chain depends largely on its maintenance.

Preparatory work
– Raise the motorcycle with a lift stand. (p. 61)

Main work
– Rinse off the loose dirt with a gentle jet of water.
– Remove old grease residues with a chain cleaner.

Chain cleaner (p. 178)

– After drying, apply chain spray.

Off-road chain spray (p. 175)

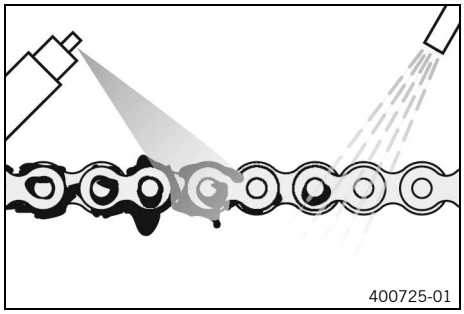

Reworking
– Remove the motorcycle from the lift stand. (p. 61)

11.39 Checking the chain tension

WARNING

Danger of accidents Incorrect chain tension can damage components and result in an accident.

If the chain is tension is too high, the chain, front sprocket, rear sprocket, transmission, and rear wheel bearings wear more quickly. Some components may break if overloaded.

If the chain is too loose, the chain may fall off the front sprocket or the rear sprocket. This can damage the rear wheel or the engine.

– Check the chain tension regularly.
– Set the chain tension in accordance with the specification.

Preparatory work

– Raise the motorcycle with a lift stand. (p. 61)

Main work

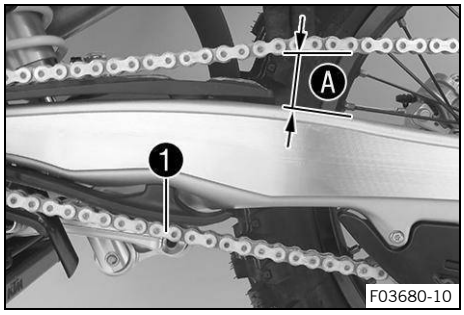

– Pull the chain at the end of the chain slider upward to measure chain tension A.

Lower chain section 1 must be taut.	
Chain tension	58 mm … 61 mm (2.28 in … 2.40 in)
Chain wear is not always even, so repeat this measurement at different positions on the chain.	

» If the chain tension does not meet the specification:
  – Adjust the chain tension. (p. 89)

Reworking

– Remove the motorcycle from the lift stand. (p. 61)

11.40 Adjusting the chain tension

WARNING

Danger of accidents Incorrect chain tension can damage components and result in an accident.

If the chain is tension is too high, the chain, front sprocket, rear sprocket, transmission, and rear wheel bearings wear more quickly. Some components may break if overloaded.

If the chain is too loose, the chain may fall off the front sprocket or the rear sprocket. This can damage the rear wheel or the engine.

– Check the chain tension regularly.
– Set the chain tension in accordance with the specification.

Preparatory work

– Raise the motorcycle with a lift stand. (p. 61)
– Check the chain tension. (p. 89)

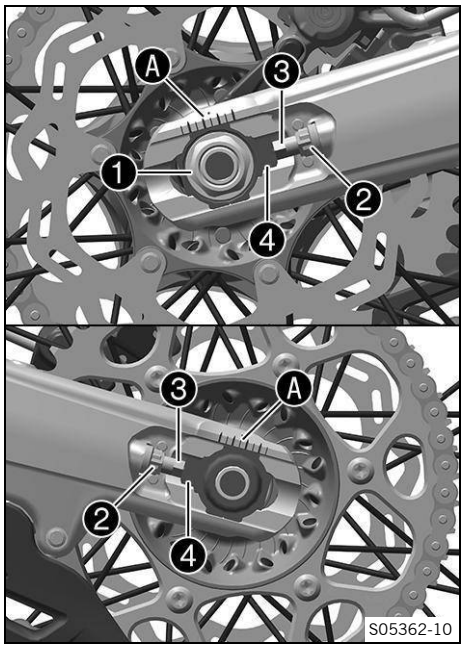

Main work

– Loosen nut ❶.
– Loosen nuts ❷.
– Adjust the chain tension by turning adjusting screws ❸ on the left and right.

Chain tension	58 mm … 61 mm (2.28 in … 2.40 in)
In order for the rear wheel to be correctly aligned, the markings on the left and right chain adjusters must be in the same position relative to reference markings Ⓐ.	

– Tighten nuts ❷.
– Make sure that chain tension adjusters ❹ are fitted correctly on adjusting screws ❸.
– Tighten nut ❶.

Nut, wheel spindle, rear	
M22×1.5	80 Nm (59.0 ft·lb_f)

Note

The wide range of adjustment of the chain tension adjusters (32 mm) enables different secondary transmissions with the same chain length.

Chain tension adjusters ❹ can be turned by 180°.

Reworking

– Remove the motorcycle from the lift stand. (p. 61)

11.41 Checking the chain, rear sprocket, front sprocket, and chain guide

Preparatory work

– Raise the motorcycle with a lift stand. (p. 61)

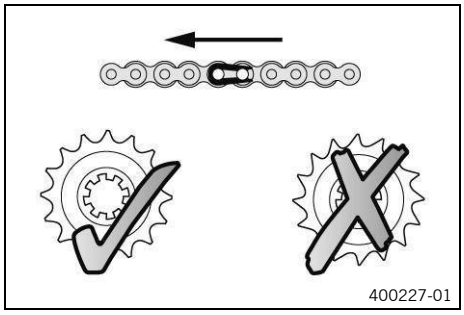

Main work

– Shift the transmission into the neutral position.
– Check the chain, rear sprocket, and front sprocket for wear.
  » If the chain, rear sprocket, or front sprocket is worn:
    – Change the drivetrain kit.

Always replace the front sprocket, rear sprocket, and chain together.

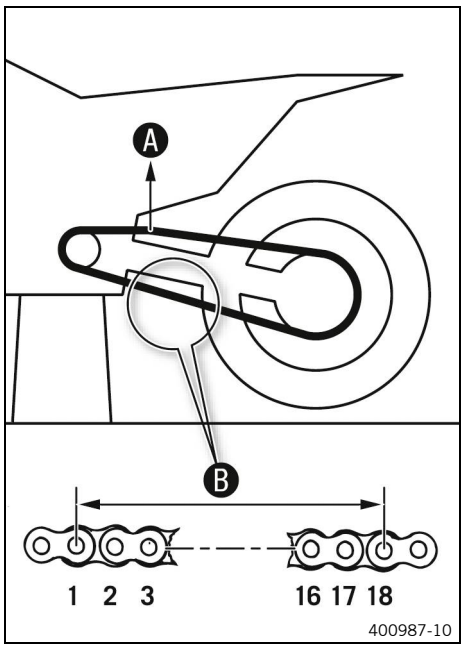

– Pull on the top section of the chain with the specified weight A.

Weight, chain wear measurement	10 kg … 15 kg (22.0 lb … 33.1 lb)

– Measure distance B of chain rollers in the lower chain section.

Maximum distance B of chain rollers at the longest chain section	272 mm (10.71 in)
Chain wear is not always even, so repeat this measurement at different positions on the chain.	

» If distance B is greater than the specified measurement:
  – Change the drivetrain kit.

When installing a new chain, also replace the rear sprocket and front sprocket.

Note
New chains wear out faster on old, worn front or rear sprockets.

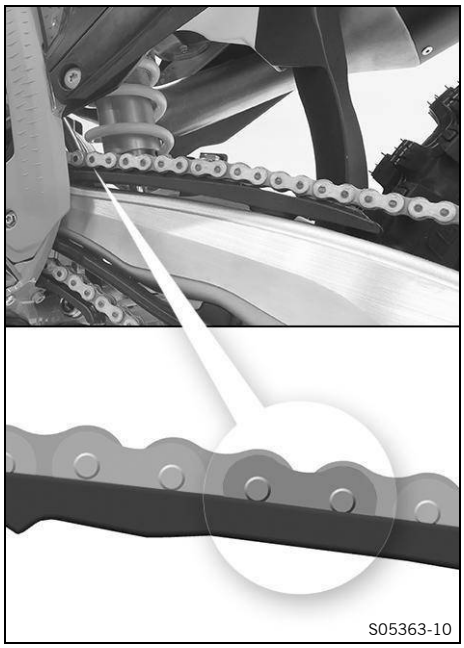

– Check the chain slider at the top for wear.
  » If the lower edge of the chain pins is in line with, or below, the chain slider:
    – Change the chain slider.
– Check that the chain slider is firmly seated.
  » If the chain slider is loose:
    – Tighten the screws of the chain slider.

Screw, chain sliding guard on link fork	
M6×16	6 Nm (4.4 ft·lb$_f$) **Loctite® 243**

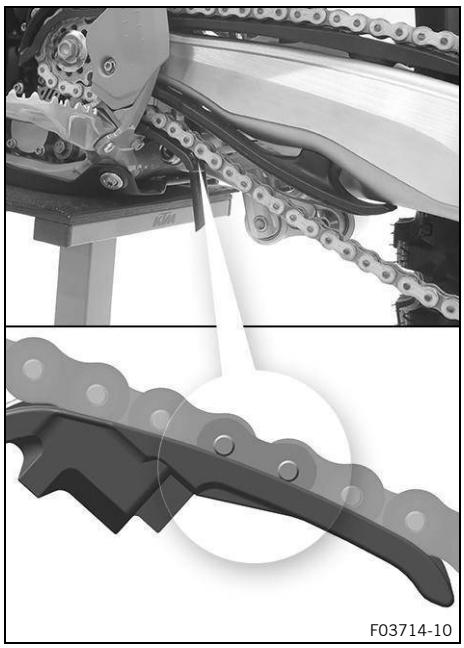

– Check the chain slider for wear.
  » If the lower edge of the chain pins is in line with or below the chain slider:
    – Change the chain slider.
– Check that the chain slider is firmly seated.
  » If the chain slider is loose:
    – Tighten the screws of the chain slider.

Screw, chain slider	
M8×20	15 Nm (11.1 ft·lb$_f$)

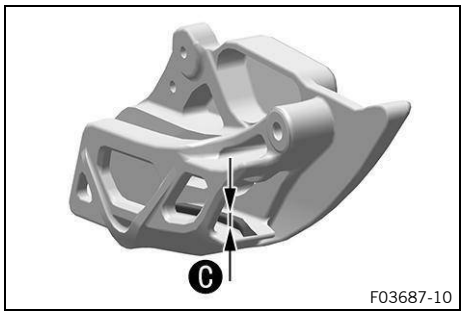

– Check the chain guide with a slide gage for dimension C.

Minimum thickness C of the chain guide	6 mm (0.24 in)

  » If the specifications have not been met:
    – Change the chain guide.

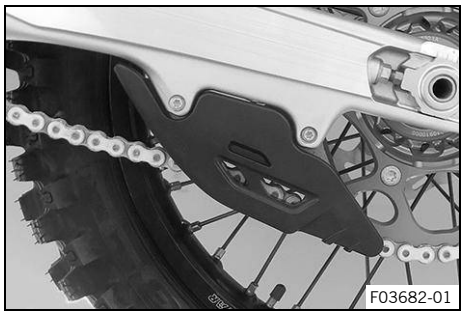

– Check that the chain guide is firmly seated.
  » If the chain guide is loose:
    – Tighten the screws on the chain guide.

Screw, chain guide on swingarm, rear	
M6×16	10 Nm (7.4 ft·lb$_f$)
Screw, chain guide on swingarm, front	
M6×45	10 Nm (7.4 ft·lb$_f$)

Reworking

– Remove the motorcycle from the lift stand. (p. 61)

11.42 Checking the frame

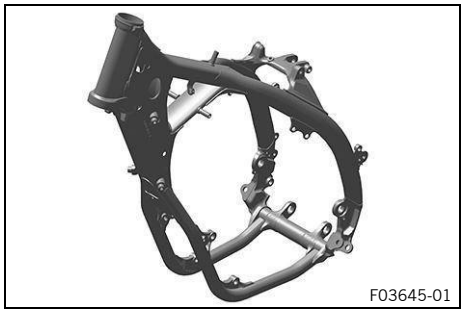
F03645-01

– Check the frame for damage, cracks, and deformation.
  » If the frame shows signs of damage, cracks, or deformation:
    – Change the frame.

    Repairs on the frame are not permitted.

11.43 Checking the swingarm

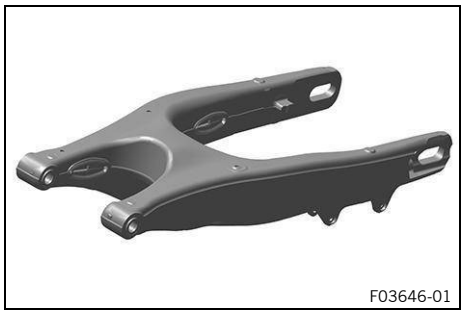
F03646-01

– Check the swingarm for damage, cracks, and deformation.
  » If the swingarm shows signs of damage, cracks, or deformation:
    – Change the swingarm.

    Repairs on the swingarm are not permitted.

11.44 Checking the throttle cable routing

WARNING

Danger of accidents The throttle cable can become kinked, jammed, or blocked if it has been routed incorrectly.

If the throttle cable is kinked, jammed or blocked, the speed can no longer be controlled.

– Make sure that the throttle cable routing and the play in the throttle cable complies with the specification.

Preparatory work

– Remove the seat. (p. 77)
– Remove the fuel tank. (p. 84)

Main work

– Check the throttle cable routing.

Both throttle cables must be routed to the throttle valve body side by side on the back of the handlebars and above the fuel tank roller. Both throttle cables must be secured behind the rubber strap of the fuel tank support.

» If the throttle cable routing is not as specified:
  – Correct the throttle cable routing.

Reworking

– Install the fuel tank. (p. 86)
– Mount the seat. (p. 78)

11.45 Checking the rubber grips

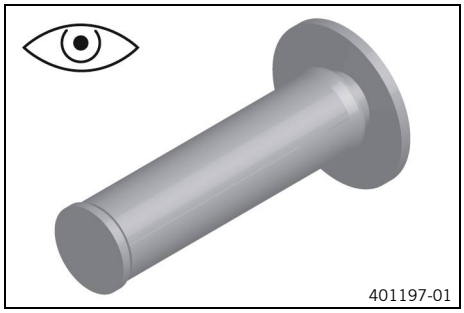

– Check the hand grips on the handlebar for damage, wear, and that they are firmly seated.

Note

The hand grips are vulcanized onto a sleeve on the left and onto the grip tube of the throttle grip on the right. The left sleeve is clamped onto the handlebar.

The hand grip can only be replaced with the sleeve or the gas pipe.

» If a hand grip is damaged or worn:
  – Replace the hand grip.

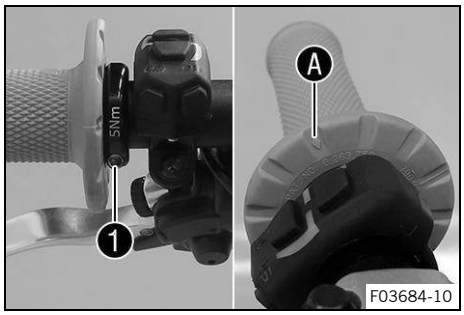

– Check that screw 1 is firmly seated.

Screw, fixed grip	
M4×12	5 Nm (3.7 ft·lb$_f$) **Loctite® 243**

Diamond A must be positioned visibly as shown in the figure.

11.46 Program the Quickshifter

Note
If the shifting performance of the Quickshifter starts to decrease, it must be reprogrammed.

- Carry out the starting procedure. (p. 33)
- Press and hold the QS button 1 for at least 10 seconds.
  ✓ The QS indicator lamp flashes.
- Pull the clutch lever, engage first-gear and hold the shift lever all the way down.
- Briefly press the QS button 1.
  ✓ The QS indicator lamp lights up blue, the teaching procedure was successful.

Note
If the quickshifter cannot be activated, the teaching procedure was unsuccessful and must be repeated.

11.47 Adjusting the basic position of the clutch lever

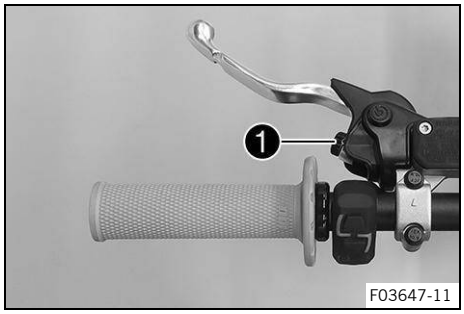

- Adjust the basic position of the clutch lever to your hand size by turning adjusting screw 1.

Only turn the adjusting screw by hand, and do not use force.
Do not make any adjustments while riding.

Note
When the adjusting screw is turned counterclockwise, the clutch lever moves closer to the handlebar.
When the adjusting screw is turned clockwise, the clutch lever moves away from the handlebar.
The range of adjustment is limited.

11.48 Checking/correcting the fluid level of hydraulic clutch

WARNING
Health hazard Brake fluid is a harmful substance.
- Keep brake fluid out of the reach of children.
- Wear suitable protective clothing and safety glasses.
- Do not allow brake fluid to come into contact with the skin, the eyes, or clothing.
- Consult a doctor immediately if brake fluid has been ingested.
- Rinse the affected area with plenty of water in the event of contact with the skin.
- Rinse eyes thoroughly with water immediately and consult a doctor if brake fluid comes into contact with the eyes.
- If brake fluid spills on to your clothing, change the clothing.

Note
The fluid level rises with increasing wear of the friction plates.
Avoid contact between brake fluid and painted parts. Brake fluid corrodes paint.

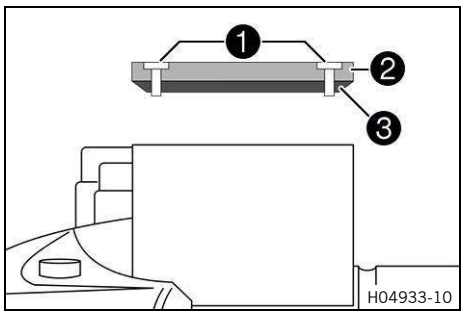

- Move the hydraulic clutch fluid reservoir mounted on the handlebar into a horizontal position.
- Remove screws 1.
- Take off cover 2 with diaphragm 3.
- Check the fluid level.

Fluid level below reservoir rim	4 mm (0.16 in)

» If the fluid level does not meet the specifications:
  - Correct the fluid level of the hydraulic clutch.

Brake fluid DOT 5.1 (p. 176)

- Position the cover with diaphragm.
- Mount and tighten the screws.

Immediately clean up any brake fluid that has overflowed or spilled with water.

11.49 Changing the hydraulic clutch fluid

WARNING
Health hazard Brake fluid is a harmful substance.
- Keep brake fluid out of the reach of children.
- Wear suitable protective clothing and safety glasses.
- Do not allow brake fluid to come into contact with the skin, the eyes, or clothing.
- Consult a doctor immediately if brake fluid has been ingested.
- Rinse the affected area with plenty of water in the event of contact with the skin.
- Rinse eyes thoroughly with water immediately and consult a doctor if brake fluid comes into contact with the eyes.
- If brake fluid spills on to your clothing, change the clothing.

NOTE
Environmental hazard Hazardous substances cause environmental damage.
- Dispose of oils, grease, filters, fuel, cleaning agents, brake fluid, etc. correctly and in accordance with the applicable regulations.

Note
The fluid level rises with increasing wear of the friction plates.
Avoid contact between brake fluid and painted parts. Brake fluid corrodes paint.

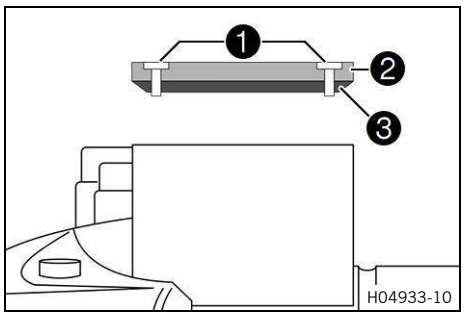

– Move the hydraulic clutch fluid reservoir mounted on the handlebar into a horizontal position.
– Remove screws ❶.
– Take off cover ❷ with diaphragm ❸.

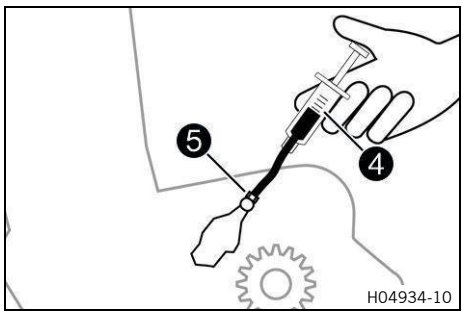

– Fill bleeding syringe ❹ with the appropriate hydraulic fluid.

Syringe (50329050000)
Brake fluid DOT 5.1 (p. 176)

– On the clutch slave cylinder, remove the protection cap and mount bleeding syringe ❹ with an appropriate hose piece on bleed screw ❺.
– Only loosen bleed screw ❺ on the clutch slave cylinder until filling is possible.

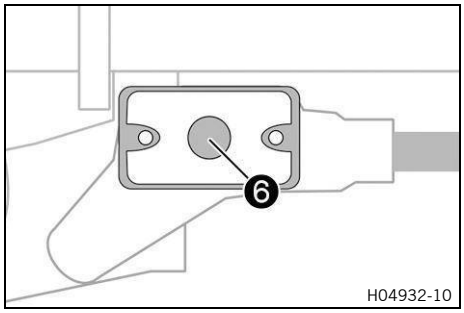

– Inject the liquid into the system until it escapes from bore ❻ of the master cylinder without bubbles.
– Occasionally extract the fluid from the master cylinder reservoir to prevent overflowing.
– Tighten the bleed screw and remove the bleeding syringe with the hose. Mount the protection cap.
– Correct the fluid level of the hydraulic clutch.

Fluid level below reservoir rim	4 mm (0.16 in)

– Position the cover with diaphragm.

Immediately clean up any brake fluid that has overflowed or spilled using water.

– Mount and tighten the screws.

12.1 Checking the free travel on the hand brake lever

WARNING

Danger of accidents The brake system fails in the event of overheating.

If there is no free travel on the brake lever, pressure builds up in the brake system.

– Set the free travel on the brake lever as specified.

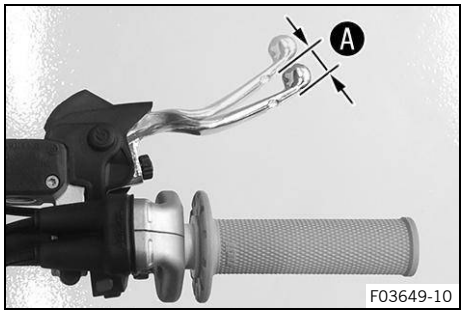

– Push the hand brake lever forward and check free travel A.

Free travel of hand brake lever	≥ 3 mm (≥ 0.12 in)

» If the free travel does not meet the specifications:

– Adjust the basic position of the hand brake lever. (p. 98)

12.2 Adjusting the basic position of the hand brake lever

Preparatory work

– Check the free travel on the hand brake lever. (p. 98)

Main work

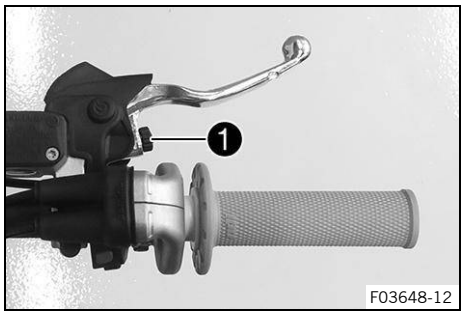

– Adjust the basic position of the hand brake lever to your hand size by turning adjusting screw 1.

Only turn the adjusting screw by hand, and do not use force.
Do not make any adjustments while riding.

Note

Turn the adjusting screw clockwise to increase the distance between the hand brake lever and the handlebar.

Turn the adjusting screw counterclockwise to decrease the distance between the hand brake lever and the handlebar.

The range of adjustment is limited.

12.3 Checking the brake discs

WARNING

Danger of accidents Worn-out brake discs reduce the braking action.

– Make sure that worn-out brake discs are replaced immediately.

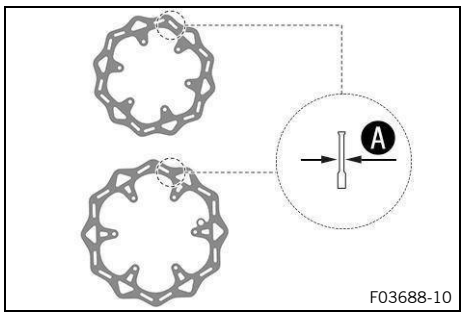

– Check the brake disc thickness of the front and rear brake disc at several places on the disc to see if they conform to measurement A.

Brake disc wear limit	
front	2.5 mm (0.098 in)
rear	3.5 mm (0.138 in)

Note
Wear reduces the thickness of the brake discs at the contact surface of the brake pads.

» If the brake disc thickness is less than the specification:
  – Change the brake discs of the front brake.
  – Change the brake discs on the rear brake.

– Check the front and rear brake discs for damage, cracks, and deformation.
  » If the brake disc shows signs of damage, cracks, or deformation:
    – Change the brake discs of the front brake.
    – Change the brake discs on the rear brake.

12.4 Checking the brake fluid level for the front brake

WARNING
Danger of accidents Brake fluid which is too old or of the wrong type impairs the function of the brake system.
– Make sure that brake fluid for the front and rear brake is changed in accordance with the service schedule.
– Make sure that only clean, approved brake fluid from a tightly sealed container is used.

WARNING
Danger of accidents An insufficient brake fluid level will cause the brake system to fail.
If the brake fluid level drops below the specified marking or the specified value, the brake system has a leak or the brake pads are worn down.
– Have the brake system checked and make sure that the problem has been eliminated before the vehicle is used again.

Preparatory work
– Check that the brake pads of the front brake are secured. (p. 101)

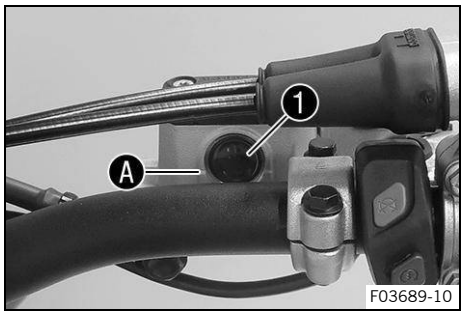

Main work

– Move the brake reservoir mounted on the handlebar to a horizontal position.
– Check the brake fluid level in sight glass 1.
  » If the brake fluid level has fallen below marking A:
    – Add brake fluid for the front brake. (p. 100)

12.5 Adding brake fluid for the front brake

WARNING

Danger of accidents Brake fluid which is too old or of the wrong type impairs the function of the brake system.

– Make sure that brake fluid for the front and rear brake is changed in accordance with the service schedule.
– Make sure that only clean, approved brake fluid from a tightly sealed container is used.

WARNING

Danger of accidents An insufficient brake fluid level will cause the brake system to fail.

If the brake fluid level drops below the specified marking or the specified value, the brake system has a leak or the brake pads are worn down.

– Have the brake system checked and make sure that the problem has been eliminated before the vehicle is used again.

WARNING

Health hazard Brake fluid is a harmful substance.

– Keep brake fluid out of the reach of children.
– Wear suitable protective clothing and safety glasses.
– Do not allow brake fluid to come into contact with the skin, the eyes, or clothing.
– Consult a doctor immediately if brake fluid has been ingested.
– Rinse the affected area with plenty of water in the event of contact with the skin.
– Rinse eyes thoroughly with water immediately and consult a doctor if brake fluid comes into contact with the eyes.
– If brake fluid spills on to your clothing, change the clothing.

NOTE

Environmental hazard Hazardous substances cause environmental damage.

– Dispose of oils, grease, filters, fuel, cleaning agents, brake fluid, etc. correctly and in accordance with the applicable regulations.

Note

Avoid contact between brake fluid and painted parts. Brake fluid corrodes paint.

Preparatory work

– Check that the brake pads of the front brake are secured. (p. 101)

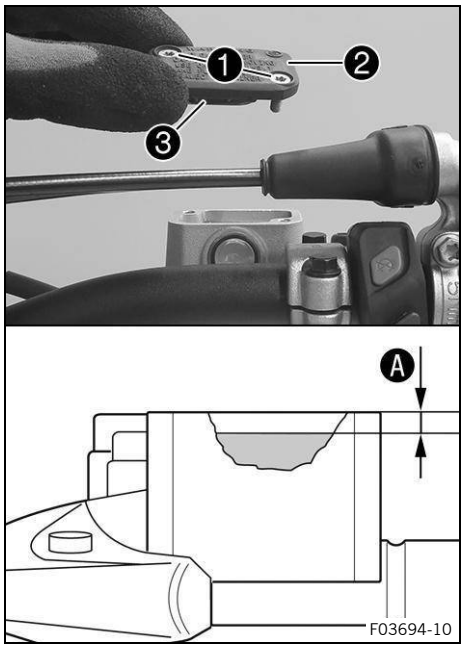

Main work

- Move the brake reservoir mounted on the handlebar to a horizontal position.
- Remove screws ❶.
- Take off cover ❷ with diaphragm ❸.
- Add brake fluid up to level Ⓐ.

Level Ⓐ (brake fluid level below reservoir rim)	5 mm (0.20 in)

Brake fluid DOT 5.1 (p. 176)

- Position cover ❷ with diaphragm ❸.
- Mount and tighten screws ❶.

Immediately clean up any brake fluid that has overflowed or spilled with water.

12.6 Checking that the brake pads of the front brake are secured

WARNING

Danger of accidents Worn brake pads reduce the brake action.

- Make sure that worn brake pads are replaced immediately.

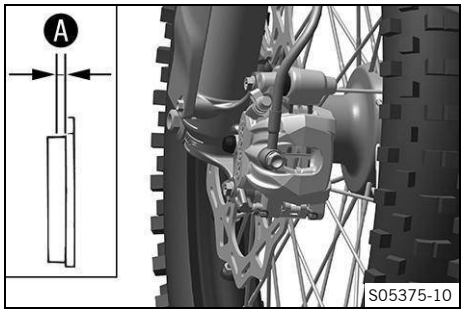

- Check all brake pads on both brake calipers for their lining thickness Ⓐ.

Minimum pad thickness Ⓐ	≥ 1 mm (≥ 0.04 in)

  » If it is less than the minimum thickness:
    - Change the front brake pads. (p. 102)
- Check the brake pads for damage and cracking.
  » If there is damage or cracking:
    - Change the front brake pads. (p. 102)
- Check that the brake pads are secured.
  » If the brake pads are not secured correctly:
    - Secure brake pads, replace with new parts if necessary.

12.7 Changing the brake pads of the front brake

WARNING
Danger of accidents Brake pads which have not been approved alter the braking action.
– Only use brake pads approved and recommended by the vehicle manufacturer.

WARNING
Danger of accidents Incorrect servicing will cause the brake system to fail.
– Ensure that service work and repairs are performed professionally.

WARNING
Danger of accidents Brake fluid which is too old or of the wrong type impairs the function of the brake system.
– Make sure that brake fluid for the front and rear brake is changed in accordance with the service schedule.
– Make sure that only clean, approved brake fluid from a tightly sealed container is used.

WARNING
Danger of accidents Oil, grease or wax on the brake discs reduces the brake action.
– Always keep the brake discs free of oil, fat and wax.
– Clean the brake discs with brake cleaner when necessary.

WARNING
Health hazard Brake fluid is a harmful substance.
– Keep brake fluid out of the reach of children.
– Wear suitable protective clothing and safety glasses.
– Do not allow brake fluid to come into contact with the skin, the eyes, or clothing.
– Consult a doctor immediately if brake fluid has been ingested.
– Rinse the affected area with plenty of water in the event of contact with the skin.
– Rinse eyes thoroughly with water immediately and consult a doctor if brake fluid comes into contact with the eyes.
– If brake fluid spills on to your clothing, change the clothing.

NOTE
Environmental hazard Hazardous substances cause environmental damage.
– Dispose of oils, grease, filters, fuel, cleaning agents, brake fluid, etc. correctly and in accordance with the applicable regulations.

Note
Avoid contact between brake fluid and painted parts. Brake fluid corrodes paint.

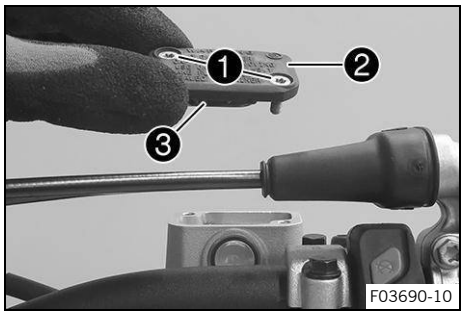

– Move the brake reservoir mounted on the handlebar to a horizontal position.
– Remove screws ❶.
– Take off cover ❷ with diaphragm ❸.

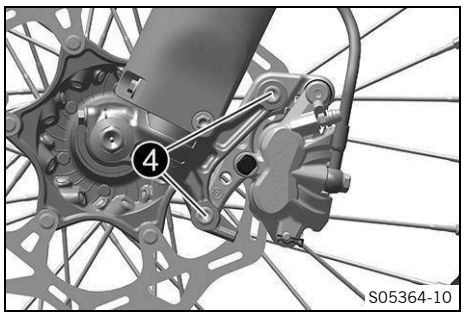

– Remove screws ❹.
– Press the brake pads back by slightly tilting the brake caliper laterally on the brake disc.
– Carefully pull the brake caliper up and off the brake disc.
– Press the brake piston back to its basic position and make sure that no brake fluid overflows from the brake reservoir, extract some brake fluid if necessary.

Do not operate the hand brake lever if the brake caliper has been removed.

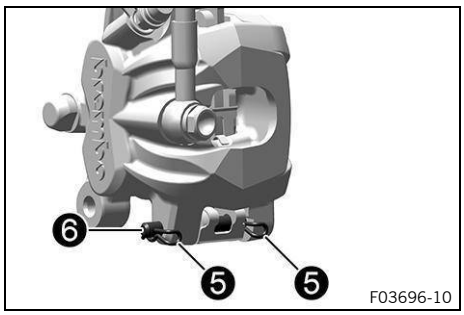

– Remove cotter pin ❺, pull out pin ❻, and remove the brake linings.
– Clean brake caliper and brake caliper support.

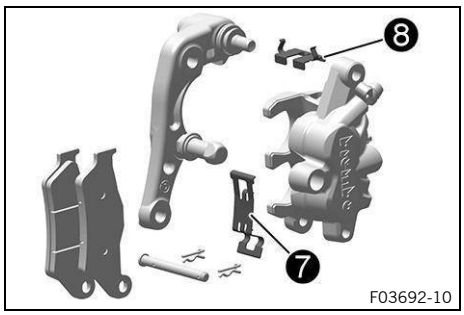

– Check that spring steel clip ❼ in the brake caliper and brake pad guide plate ❽ in the brake caliper support are properly seated.

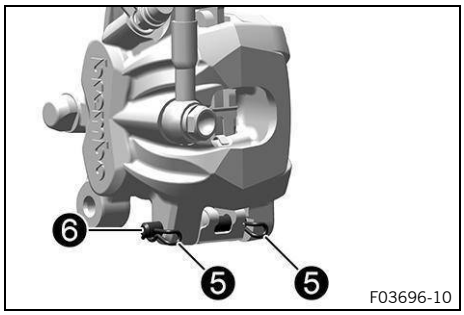

– Insert the new brake pads, mount stud ❻ and cotter pins ❺.

Make sure the brake pads and retaining spring are properly seated.
Mount the outer cotter pins from the front to the rear. Mount the inner cotter pins from the rear to the front.
Always replace brake pads in sets.

Tip
To make it easier to mount the stud, push the brake pads upward against the retaining spring.

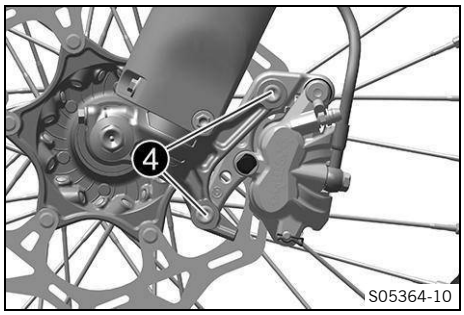

– Position the brake caliper.
– Mount and tighten screws ❹.

Screw, front brake caliper	
M8×30	25 Nm (18.4 ft·lb$_f$) **Loctite® 243**

– Operate the hand brake lever repeatedly until the brake pads are in contact with the brake disc and a pressure point is reached.

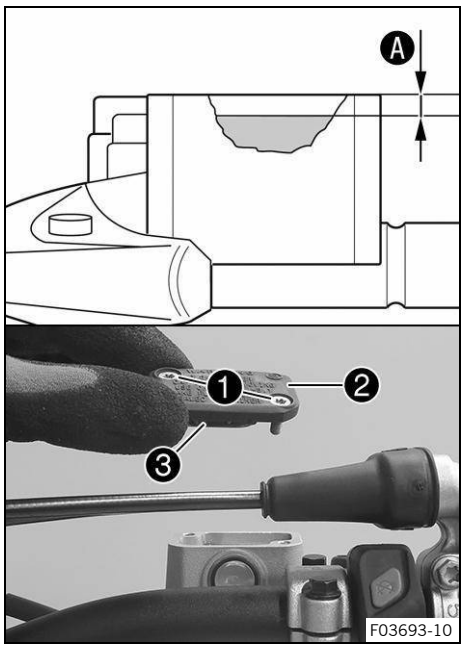

– Add brake fluid to level A.

Level A (brake fluid level below reservoir rim)	5 mm (0.20 in)

Brake fluid DOT 5.1 (p. 176)

– Position cover 2 with diaphragm 3.
– Mount and tighten screws 1.

Immediately clean up any brake fluid that has overflowed or spilled with water.

12.8 Checking the free travel of the brake pedal

WARNING
Danger of accidents The brake system fails in the event of overheating.
If there is no free travel on the brake lever, pressure builds up in the brake system.
– Set the free travel on the brake lever as specified.

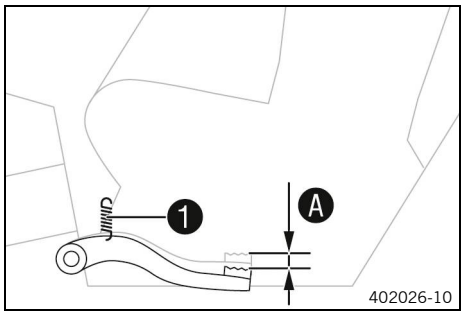

– Detach spring 1.
– Move the brake pedal back and forth between the end stop and the brake pedal cylinder piston actuation and check free travel A.

Free travel of brake pedal	3 mm … 5 mm (0.12 in … 0.20 in)

» If the free travel does not meet the specifications:
  – Adjust the basic position of the brake pedal. (p. 104)
– Attach spring 1.

12.9 Adjusting the basic position of the brake pedal

WARNING
Danger of accidents The brake system fails in the event of overheating.
If there is no free travel on the brake lever, pressure builds up in the brake system.
– Set the free travel on the brake lever as specified.

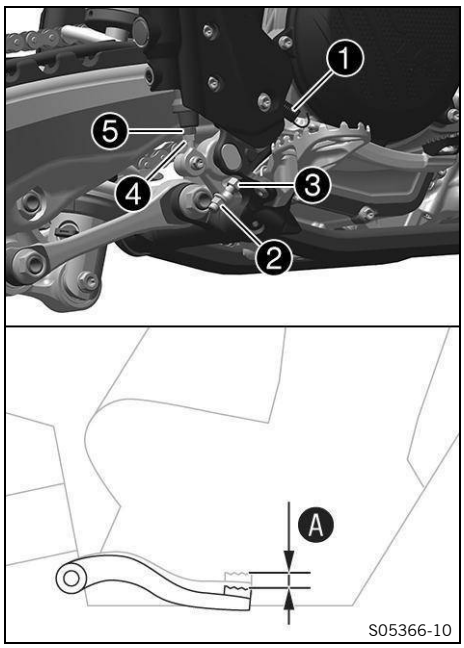

– Detach spring ❶.
– Loosen nut ❹ and unscrew it with push rod ❺ until you have maximum free travel.
– To adjust the basic position of the brake pedal to individual requirements, loosen nut ❷ and turn screw ❸ accordingly.

Note
The range of adjustment is limited.

– Turn push rod ❺ accordingly until you have free travel Ⓐ.
– If necessary, adjust the basic position of the brake pedal.

Free travel of brake pedal	3 mm … 5 mm (0.12 in … 0.20 in)

– Hold push rod ❺ and tighten nut ❹.

Remaining nuts on chassis	
M6	10 Nm (7.4 ft·lb$_f$)

– Hold screw ❸ and tighten nut ❷.

Brake pedal stop nut	
M8	20 Nm (14.8 ft·lb$_f$)

– Attach spring ❶.

12.10 Checking the brake fluid level for the rear brake

WARNING
Danger of accidents Brake fluid which is too old or of the wrong type impairs the function of the brake system.
– Make sure that brake fluid for the front and rear brake is changed in accordance with the service schedule.
– Make sure that only clean, approved brake fluid from a tightly sealed container is used.

WARNING
Danger of accidents An insufficient brake fluid level will cause the brake system to fail.
If the brake fluid level drops below the specified marking or the specified value, the brake system has a leak or the brake pads are worn down.
– Have the brake system checked and make sure that the problem has been eliminated before the vehicle is used again.

Preparatory work
– Check that the brake pads of the rear brake are secured.
(p. 107)

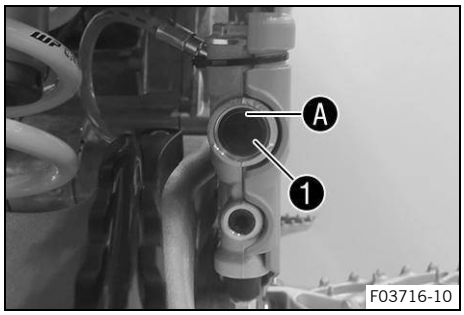

Main work

– Stand the vehicle upright.
– Check the brake fluid level in sight glass ❶.
  » If the brake fluid level has fallen below marking Ⓐ:
    – Add brake fluid for the rear brake. (p. 106)

12.11 Adding brake fluid for the rear brake

WARNING

Danger of accidents Brake fluid which is too old or of the wrong type impairs the function of the brake system.

– Make sure that brake fluid for the front and rear brake is changed in accordance with the service schedule.
– Make sure that only clean, approved brake fluid from a tightly sealed container is used.

WARNING

Danger of accidents An insufficient brake fluid level will cause the brake system to fail.

If the brake fluid level drops below the specified marking or the specified value, the brake system has a leak or the brake pads are worn down.

– Have the brake system checked and make sure that the problem has been eliminated before the vehicle is used again.

WARNING

Health hazard Brake fluid is a harmful substance.

– Keep brake fluid out of the reach of children.
– Wear suitable protective clothing and safety glasses.
– Do not allow brake fluid to come into contact with the skin, the eyes, or clothing.
– Consult a doctor immediately if brake fluid has been ingested.
– Rinse the affected area with plenty of water in the event of contact with the skin.
– Rinse eyes thoroughly with water immediately and consult a doctor if brake fluid comes into contact with the eyes.
– If brake fluid spills on to your clothing, change the clothing.

NOTE

Environmental hazard Hazardous substances cause environmental damage.

– Dispose of oils, grease, filters, fuel, cleaning agents, brake fluid, etc. correctly and in accordance with the applicable regulations.

Note

Avoid contact between brake fluid and painted parts. Brake fluid corrodes paint.

Preparatory work

– Check that the brake pads of the rear brake are secured. (p. 107)
– Remove the frame protector. (p. 65)

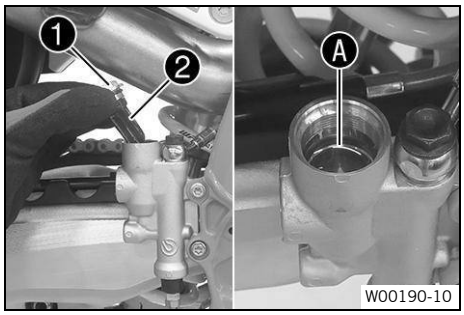

Main work

– Stand the vehicle upright.
– Remove screw cap ❶ with diaphragm ❷ and the O-ring.
– Add brake fluid to mark Ⓐ.

Brake fluid DOT 5.1 (p. 176)

– Mount and tighten the screw cap with the membrane and O-ring.

Immediately clean up any brake fluid that has overflowed or spilled using water.

Reworking

– Install the frame protector. (p. 65)

12.12 Checking that the brake pads of the rear brake are secured

WARNING
Danger of accidents Worn brake pads reduce the brake action.
– Make sure that worn brake pads are replaced immediately.

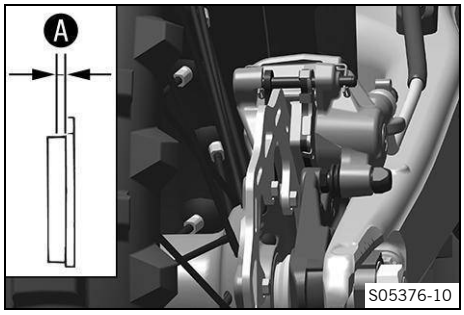

– Check all brake pads on both brake calipers for their lining thickness Ⓐ.

Minimum pad thickness Ⓐ	≥ 1 mm (≥ 0.04 in)

» If it is less than the minimum thickness:
  – Change the rear brake pads. (p. 107)
– Check the brake pads for damage and cracking.
» If there is damage or cracking:
  – Change the rear brake pads. (p. 107)
– Check that the brake pads are secured.
» If the brake pads are not secured correctly:
  – Secure brake pads, replace with new parts if necessary.

12.13 Changing the rear brake pads

WARNING
Danger of accidents Brake pads which have not been approved alter the braking action.
– Only use brake pads approved and recommended by the vehicle manufacturer.

WARNING
Danger of accidents Incorrect servicing will cause the brake system to fail.
– Ensure that service work and repairs are performed professionally.

WARNING

Danger of accidents Brake fluid which is too old or of the wrong type impairs the function of the brake system.

– Make sure that brake fluid for the front and rear brake is changed in accordance with the service schedule.
– Make sure that only clean, approved brake fluid from a tightly sealed container is used.

WARNING

Danger of accidents Oil, grease or wax on the brake discs reduces the brake action.

– Always keep the brake discs free of oil, fat and wax.
– Clean the brake discs with brake cleaner when necessary.

WARNING

Health hazard Brake fluid is a harmful substance.

– Keep brake fluid out of the reach of children.
– Wear suitable protective clothing and safety glasses.
– Do not allow brake fluid to come into contact with the skin, the eyes, or clothing.
– Consult a doctor immediately if brake fluid has been ingested.
– Rinse the affected area with plenty of water in the event of contact with the skin.
– Rinse eyes thoroughly with water immediately and consult a doctor if brake fluid comes into contact with the eyes.
– If brake fluid spills on to your clothing, change the clothing.

NOTE

Environmental hazard Hazardous substances cause environmental damage.

– Dispose of oils, grease, filters, fuel, cleaning agents, brake fluid, etc. correctly and in accordance with the applicable regulations.

Note

Avoid contact between brake fluid and painted parts. Brake fluid corrodes paint.

Preparatory work

– Remove the frame protector. (p. 65)

Main work

– Stand the vehicle upright.
– Remove screw cap ❶ with diaphragm ❷ and the O-ring.

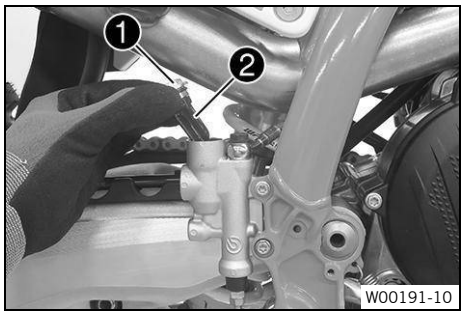

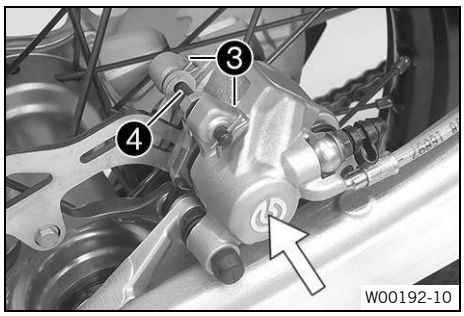

– Manually press the brake caliper toward the brake disc to push back the brake piston. Ensure that brake fluid does not flow out of the brake reservoir, and siphon off excess if required.
– Remove cotter pins ❸, pull out pin ❹, and remove the brake linings.
– Clean brake caliper and brake caliper support.

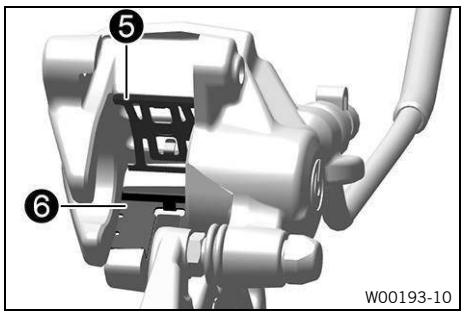

– Check that spring steel clip ❺ in the brake caliper and brake pad guide plate ❻ in the brake caliper support are properly seated.
  ✓ The arrow on the spring steel clip points in the rotation direction of the brake disc.

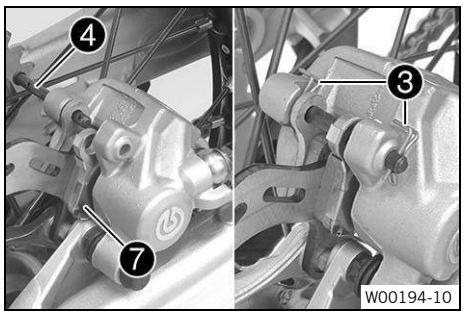

– Insert the new brake pads ❼, insert pin ❹, and mount cotter pins ❸.

Make sure the brake pads and retaining spring are properly seated.
Always replace brake pads in sets.

– Actuate the brake disc repeatedly until the brake pads are in contact with the brake disc and a pressure point is achieved.

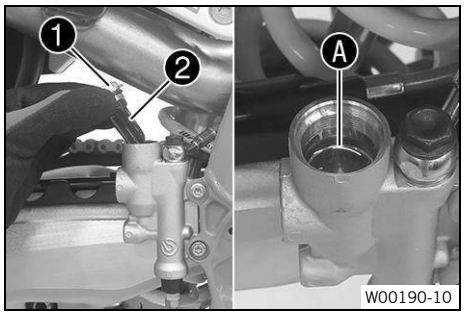

– Correct brake fluid level to marking Ⓐ.

Brake fluid DOT 5.1 (p. 176)

– Mount and tighten screw cap ❶ with membrane ❷ and the O-ring.

Immediately clean up any brake fluid that has overflowed or spilled with water.

Reworking

– Install the frame protector. (p. 65)

13.1 Removing the front wheel

Preparatory work

– Raise the motorcycle with a lift stand. (p. 61)

Main work

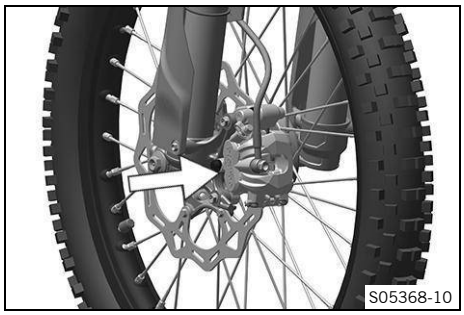

– Manually press the brake caliper toward the brake disc to push back the brake pistons.

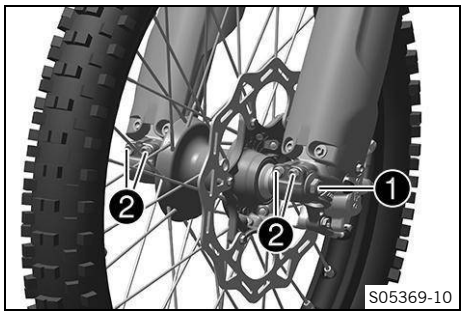

– Loosen screw ❶ by four turns.
– Loosen screws ❷.
– Press on screw ❶ to push the wheel spindle out of the fork shoe.
– Remove screw ❶.

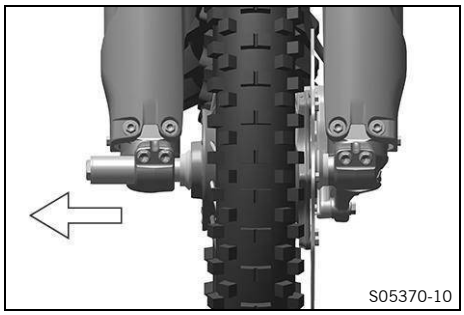

WARNING

Danger of accidents Damaged brake discs reduce the braking action.

– Always lay the wheel down in such a way that the brake disc is not damaged.

– Hold front wheel and remove wheel spindle.
– Take the front wheel out of the fork.

Do not actuate the hand brake lever when the front wheel is removed.

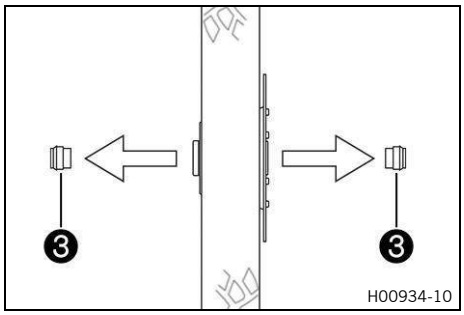

– Remove spacers ❸.

13.2 Installing the front wheel

WARNING

Danger of accidents Oil, grease or wax on the brake discs reduces the brake action.

– Always keep the brake discs free of oil, fat and wax.
– Clean the brake discs with brake cleaner when necessary.

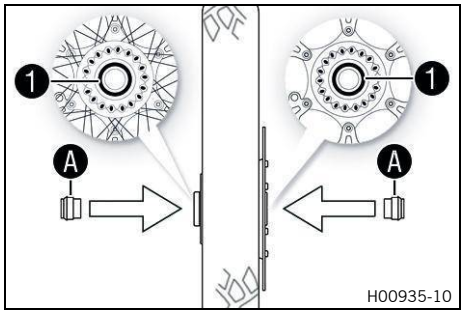

– Check the wheel bearing for damage and wear.
  » If the wheel bearing is damaged or worn:
    – Change the front wheel bearing.
– Clean and grease radial shaft seal ❶ and contact surfaces Ⓐ on the spacers.

Long-life grease (p. 175)

– Insert spacers.
– Clean and lightly grease the wheel spindle.

Long-life grease (p. 175)

– Position the front wheel and insert the wheel spindle.
  ✓ The brake pads are positioned correctly.

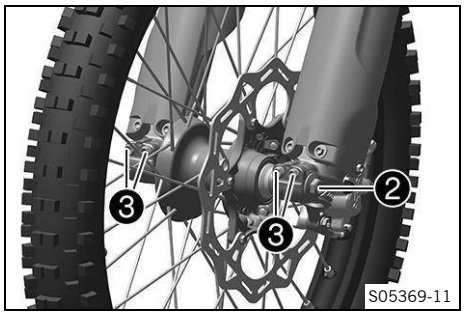

– Mount and tighten screw ❷.

Screw, wheel spindle, front	
M20×1.5	35 Nm (25.8 ft·lb$_f$)

– Operate the hand brake lever several times until the brake pads are in contact with the brake disc.
– Remove the motorcycle from the lift stand. (p. 61)
– Operate the front brake and compress the fork a few times firmly.
  ✓ The fork legs straighten.
– Tighten screws ❸.

Screw, fork shoe	
M8×25	15 Nm (11.1 ft·lb$_f$)

13.3 Removing the rear wheel

Preparatory work

– Raise the motorcycle with a lift stand. (p. 61)

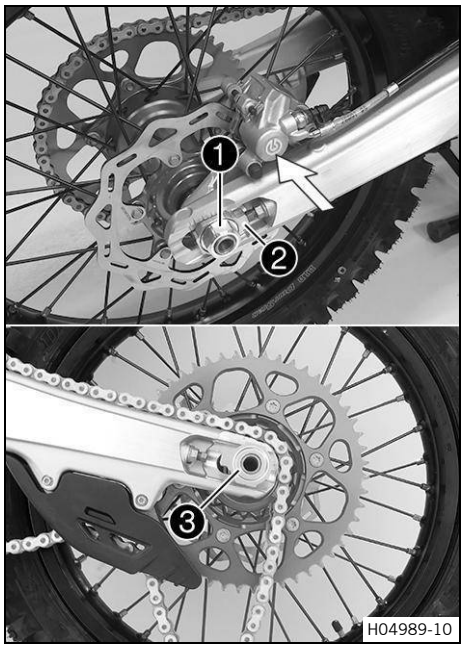

Main work

- Manually press the brake caliper toward the brake disc to push back the brake pistons.
- Remove nut ❶.
- Remove chain tension adjuster ❷.
- Pull out wheel spindle ❸ far enough to allow the rear wheel to be pushed forward.
- Push the rear wheel forward as far as possible.
- Remove the chain from the rear sprocket.

Protect the components against damage by covering them.

WARNING

Danger of accidents Damaged brake discs reduce the braking action.

- Always lay the wheel down in such a way that the brake disc is not damaged.

- Hold the rear wheel and remove wheel spindle.
- Take the rear wheel out of the swingarm.

Do not actuate the brake pedal when the rear wheel is removed.

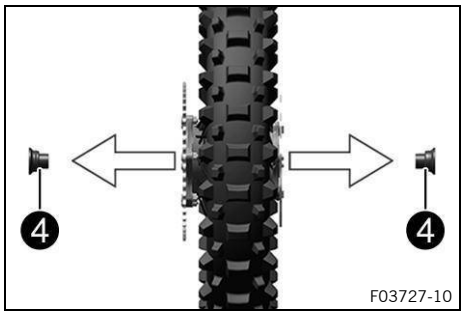

- Remove spacers ❹.

13.4 Installing the rear wheel

WARNING

Danger of accidents Oil, grease or wax on the brake discs reduces the brake action.

- Always keep the brake discs free of oil, fat and wax.
- Clean the brake discs with brake cleaner when necessary.

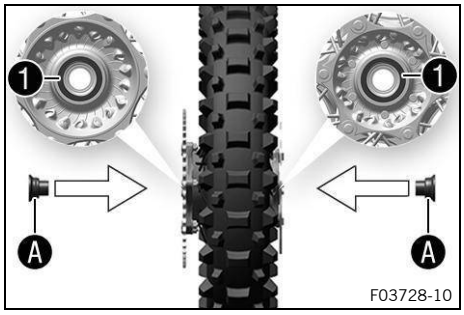

Main work

- Check the wheel bearing for damage and wear.
  - » If the wheel bearing is damaged or worn:
    - Change the rear wheel bearing.
- Clean and grease radial shaft seal ❶ and contact surfaces Ⓐ on the spacers.

Long-life grease (p. 175)

- Insert spacers.

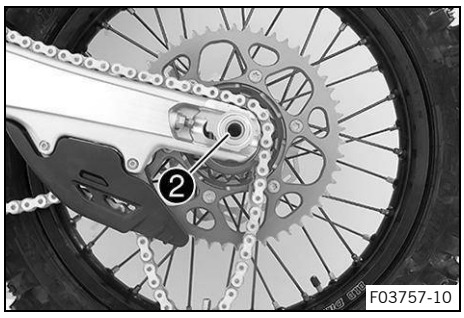

– Clean and lightly grease the wheel spindle.

Long-life grease (p. 175)

– Position the rear wheel and insert wheel spindle ❷.
  ✓ The brake pads are positioned correctly.
– Attach the chain.

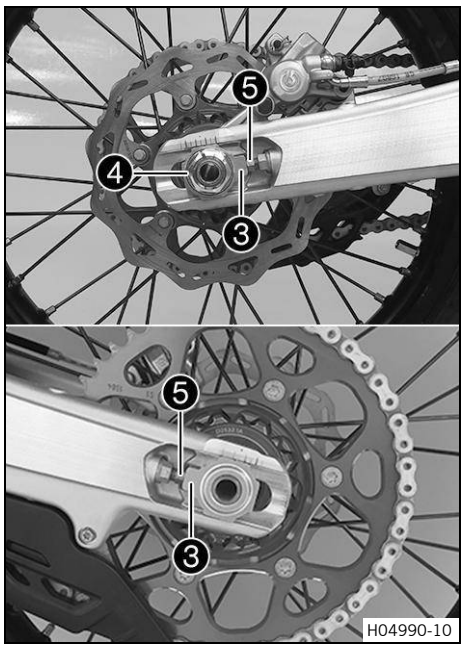

– Position chain tension adjuster ❸.
– Mount nut ❹ but do not tighten yet.
– Make sure that chain tension adjusters ❸ are fitted correctly on adjusting screws ❺.
– Check the chain tension. (p. 89)
– Tighten nut ❹.

Nut, wheel spindle, rear	
M22×1.5	80 Nm (59.0 ft·lb$_f$)

Note
The wide range of adjustment of the chain tension adjusters (32 mm) enables different secondary transmissions with the same chain length.
Chain tension adjusters ❸ can be turned by 180°.

– Actuate the brake disc repeatedly until the brake pads are in contact with the brake disc and a pressure point is achieved.

Reworking

– Remove the motorcycle from the lift stand. (p. 61)

13.5 Checking the tire condition

Note
Only mount tires approved and/or recommended by KTM.
Other tires could have a negative effect on handling characteristics.
The type, condition, and pressure of the tires all have a major impact on the handling of the motorcycle.
The tires mounted on the front and rear wheels must have a similar profile.
Worn tires have a negative effect on handling characteristics, especially on wet surfaces.

Preparatory work

– Raise the motorcycle with a lift stand. (p. 61)

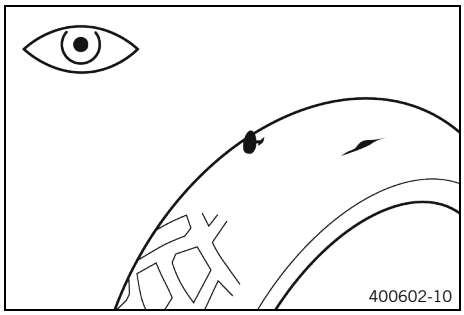

Main work

– Check the front and rear tires for cuts, embedded objects, and other damage.
  » If the tires have cuts, run-in objects, or other damage:
    – Change the tires.

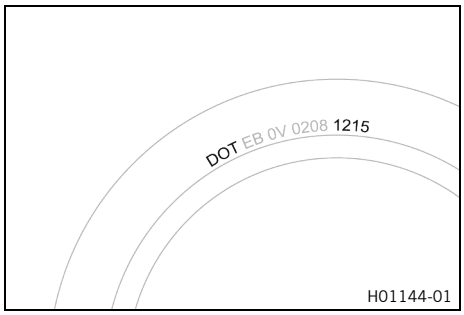

– Check the tire age.

Note
The tire date of manufacture is usually contained in the tire label and is indicated by the last four digits of the **DOT** number. The first two digits indicate the week of manufacture and the last two digits the year of manufacture.
KTM recommends that the tires be changed after 5 years at the latest, regardless of the actual state of wear.

  » If the tires are older than five years:
    – Change the tires.

Reworking

– Remove the motorcycle from the lift stand. (p. 61)

13.6 Checking the tire pressure

Note
Low tire pressure leads to abnormal wear and the tire overheating.
Correct tire pressure ensures optimal riding comfort and maximum tire service life.

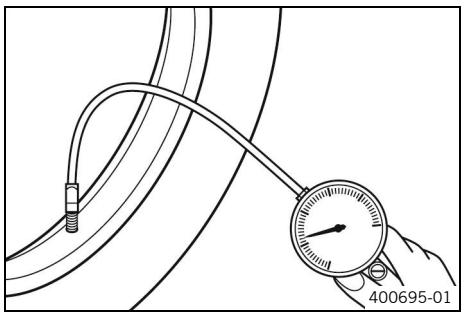

– Remove the protection cap.
– Check the tire pressure when the tires are cold.

Off-road tire pressure	
front	1.0 bar (14.5 psi)
rear	1.0 bar (14.5 psi)

  » If the tire pressure does not meet specifications:
    – Correct tire pressure.
– Mount the protection cap.

13.7 Checking the spoke tension

WARNING

Danger of accidents Incorrectly tensioned spokes impair the handling characteristic and can result in secondary damage.

If the spokes are too tight, they can break due to being overloaded.

Loose spokes can cause lateral or radial run-out in the wheel and other spokes will loosen as a result.

– Check the spoke tension regularly, especially on a new vehicle.

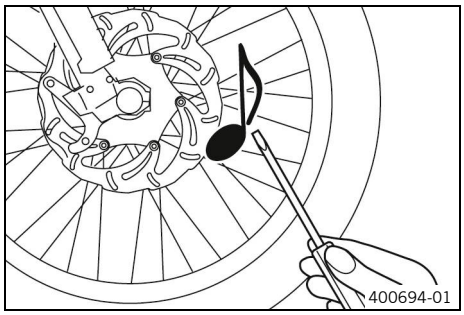

– Briefly tap each spoke with a screwdriver.

You should hear a high-pitched sound.

Note

The frequency of the sound depends on the spoke length and spoke diameter.

If spokes of the same length and diameter vibrate with a different tone, this is an indication that the spoke tensions differ.

» If the spoke tension differs:

– Correct the spoke tension.

– Check the spoke torque.

Spoke nipple	
M4,5	6 Nm (4.4 ft·lb_f)

Torque wrench kit (58429094000)

14.1 Removing the 12 V battery

WARNING

Risk of injury 12–V batteries contain harmful substances.

- Keep 12–V batteries out of the reach of children.
- Keep the battery away from sparks or open flames.
- Only charge batteries in well-ventilated rooms.
- Maintain a minimum distance from flammable materials when charging 12-V batteries.

Minimum distance	1 m (3 ft – 3 in)

- Do not charge deeply discharged 12– V batteries if the charge is already below the minimum voltage.

Minimum voltage before starting charging	9 V

- Dispose of 12 V batteries correctly if they have less than the minimum voltage.

CAUTION

Danger of burns The regulator rectifier gets very hot when the vehicle is operated.

- Allow the regulator rectifier to cool down before performing any work.

NOTE

Environmental hazard 12–V batteries contain environmentally-hazardous materials.

- Do not dispose of 12–V batteries as household waste.
- Dispose of 12–V batteries at a collection point for used batteries.

NOTE

Environmental hazard Hazardous substances cause environmental damage.

- Dispose of oils, grease, filters, fuel, cleaning agents, brake fluid, etc. correctly and in accordance with the applicable regulations.

Preparatory work

- Remove the seat. (p. 77)

Main work

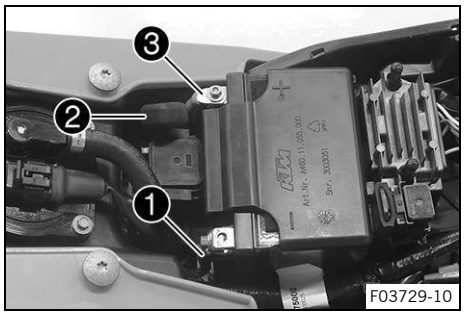

- Disconnect negative cable ❶ from the 12 V battery.
- Pull back positive terminal cover ❷ and disconnect positive cable ❸ from the 12-V battery.

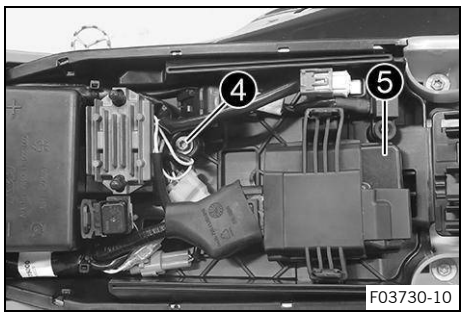

– Remove screw ❹.
– Pull off engine control unit ❺ from the holder and hang to the side.

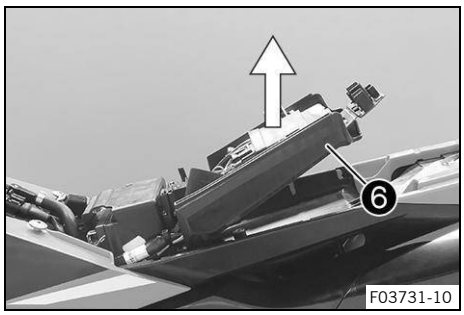

– Pull up battery holding bracket ❻ and remove the 12-V battery to the rear.

Pay attention to the wiring harness.

14.2 Installing the 12 V battery

Main work

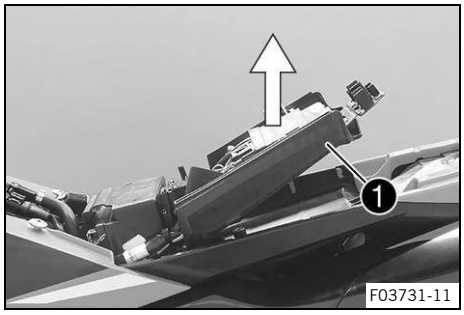

– Pull up battery holding bracket ❶, insert the 12-V battery into the battery compartment with the terminals facing upwards and secure with battery holding bracket ❶.

Ensure that the cable is routed correctly.

12-V battery (HJTZ5S-FP-C) (p. 177)

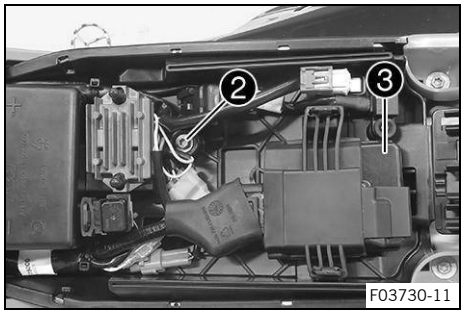

– Mount and tighten screw ❷.

Screw, battery holding bracket on subframe	
M6×12	6 Nm (4.4 ft·lb$_f$)

– Attach the engine control unit ❸ to the holder.

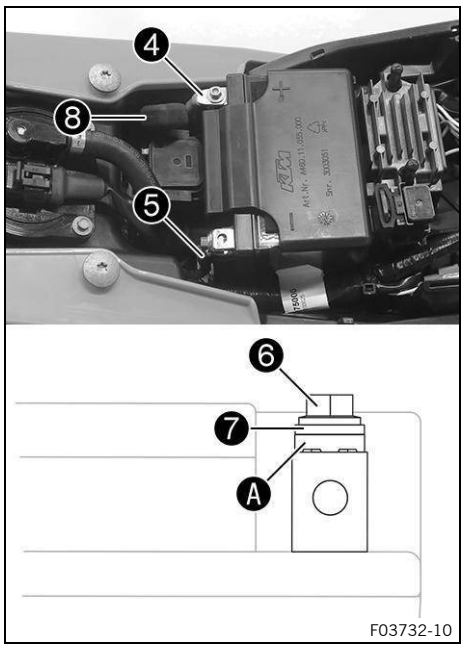

– Connect positive cable ❹ to the 12 V battery.

Screw, battery terminal	
M5×12	2.5 Nm (1.84 ft·lb$_f$)

– Connect negative cable ❺ to the 12 V battery.

Screw, battery terminal	
M5×12	2.5 Nm (1.84 ft·lb$_f$)

Contact disks Ⓐ must be mounted under screws ❻ and cable lug ❼ with the claws toward the battery terminal.

– Slide positive terminal cover ❽ over the positive terminal.

Reworking

– Mount the seat. (p. 78)

14.3 Charging the 12 V battery

WARNING

Risk of injury 12–V batteries contain harmful substances.

– Keep 12–V batteries out of the reach of children.
– Keep the battery away from sparks or open flames.
– Only charge batteries in well-ventilated rooms.
– Maintain a minimum distance from flammable materials when charging 12-V batteries.

Minimum distance	1 m (3 ft – 3 in)

– Do not charge deeply discharged 12– V batteries if the charge is already below the minimum voltage.

Minimum voltage before starting charging	9 V

– Dispose of 12 V batteries correctly if they have less than the minimum voltage.

NOTE

Environmental hazard 12–V batteries contain environmentally-hazardous materials.

– Do not dispose of 12–V batteries as household waste.
– Dispose of 12–V batteries at a collection point for used batteries.

NOTE

Environmental hazard Hazardous substances cause environmental damage.

– Dispose of oils, grease, filters, fuel, cleaning agents, brake fluid, etc. correctly and in accordance with the applicable regulations.

Note

Even when there is no load on the 12 V battery, it discharges steadily each day.

The state of charge and the method of charging are very important for the service life of the 12 V battery.

Rapid recharging with a high charging current shortens the service life of the battery.

If the charging current, charging voltage, or charging time is exceeded, the 12 V battery will be destroyed.

If the 12 V battery is left in a discharged state for an extended period, it will become deeply discharged and suffer a loss of capacity, destroying the battery.

The 12 V battery is maintenance-free.

Preparatory work

– Remove the seat. (p. 77)
– Remove the 12 V battery. (p. 116)

Main work

– Do not remove cover ❶.
– Check the battery voltage.

» Battery voltage:
  - < 9 V
  – Do not charge the 12 V battery.
  – Replace the 12 V battery and dispose of the old 12 V battery properly.

» If the specifications have been met:
  Battery voltage:
  - ≥ 9 V
  – Connect a charger to the 12 V battery. Switch the charger on.

Read the accompanying instructions.	
Maximum charging voltage	14.4 V
Minimum charging voltage	3.0 A
Maximum charging time	24 h
The charging current, charging voltage, and charging time must not be exceeded.	
Recharge the 12 V battery regularly when the motorcycle is not being used.	6 months
If the 12 V battery is depleted from starting the vehicle repeatedly, the battery must be charged immediately.	

(EU) battery charger (79629974000)
(US) battery charger (79629974500)

Note

This charger tests whether the 12 V battery retains its voltage. It is also impossible to overcharge the 12 V battery with this charger. The charging time may be longer at low temperatures.

This battery charger is only suitable for lithium iron phosphate batteries.

– Switch off the charger after charging and disconnect from the 12 V battery.

Reworking

– Install the 12 V battery. (p. 117)
– Mount the seat. (p. 78)

14.4 Changing the main fuse

WARNING

Fire hazard Incorrect fuses overload the electrical system.

– Use only fuses with the prescribed amperage.
– Do not bypass or repair fuses.

CAUTION

Danger of burns The regulator rectifier gets very hot when the vehicle is operated.

– Allow the regulator rectifier to cool down before performing any work.

Note

The main fuse protects all electrical power loads of the vehicle. It is located in the starter relay housing under the seat.

Preparatory work

– Remove the seat. (p. 77)
– Remove the fuel tank. (p. 84)

Main work

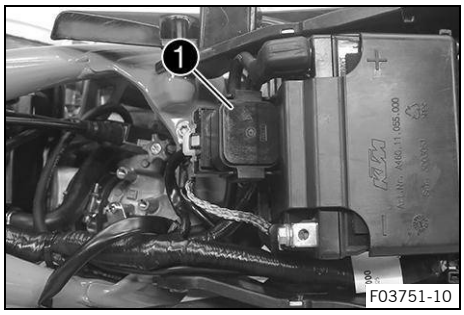

– Pull starter relay ❶ off of the bracket.

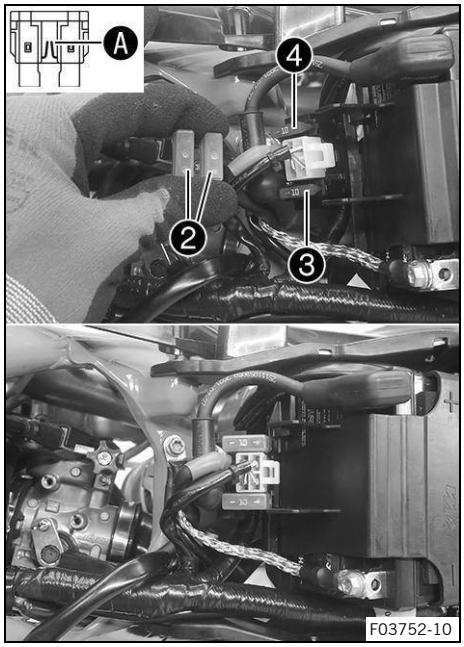

– Remove protection caps ❷.
– Remove faulty main fuse ❸.

Note

A faulty fuse has a burned-out fuse wire Ⓐ.

A spare fuse ❹ is located in the starter relay.

– Insert the main fuse.

Fuse (58011109110) (p. 177)

– Check that the electrical equipment is functioning properly.

Tip

Insert a new spare fuse so that it is available if needed.

– Mount the protection caps.
– Mount the starter relay onto the holder and route the cable.

Reworking

– Install the fuel tank. (p. 86)
– Mount the seat. (p. 78)

14.5 Changing the fuse of the fuel pump

WARNING

Fire hazard Incorrect fuses overload the electrical system.

– Use only fuses with the prescribed amperage.
– Do not bypass or repair fuses.

CAUTION

Danger of burns The regulator rectifier gets very hot when the vehicle is operated.

– Allow the regulator rectifier to cool down before performing any work.

Note

The fuel pump is protected by the fuel pump fuse. This is located under the seat.

Preparatory work

– Remove the seat. (p. 77)

Main work

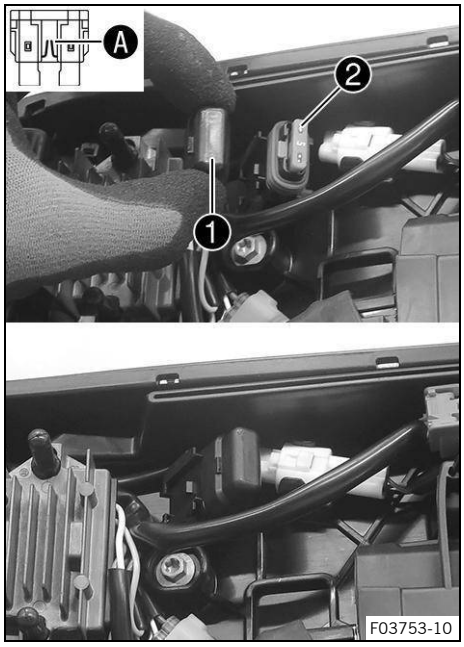

– Remove protection cap 1.
– Remove faulty main fuse 2.

Note

A faulty fuse has a burned-out fuse wire A.

– Put in the new fuse for the fuel pump.

Fuse (58011109105) (p. 177)

– Check that the electrical equipment is functioning properly.
– Attach the protection cap.

Reworking

– Mount the seat. (p. 78)

14.6 Diagnostic connector

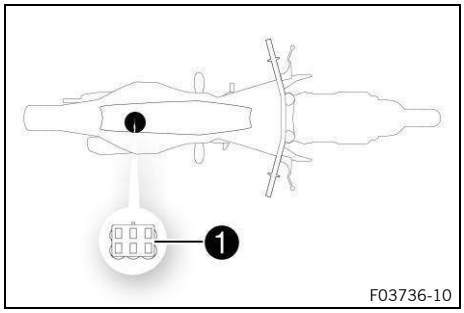

Diagnostics connector 1 is located under the seat.

Note

As soon as the diagnostics tool is connected, the hourmeter starts running.

Before longer diagnostic sessions, unplug the hourmeter behind the number plate.

15.1 Cooling system

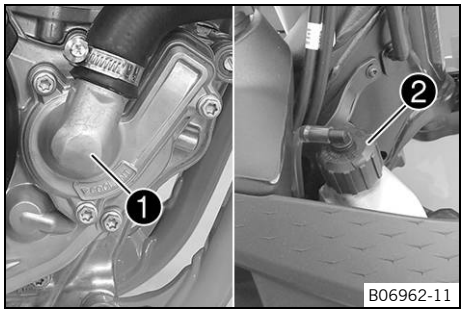

Water pump ❶ in the engine circulates the coolant.
The pressure resulting from the warming of the cooling system is regulated by a valve in radiator cap ❷.
The coolant is cooled by the air stream.
The lower the vehicle speed, the lower the cooling effect. Dirty cooling fins also reduce the cooling effect.

15.2 Checking the frost protection and coolant level

WARNING
Health hazard Coolant is harmful to health.
- Keep coolant out of the reach of children.
- Do not allow coolant to come into contact with skin, eyes, or clothing.
- Consult a doctor immediately if coolant has been ingested.
- Rinse the affected area immediately with plenty of water in the event of contact with skin.
- Rinse eyes thoroughly with water and consult a doctor immediately if coolant comes into contact with eyes.
- If coolant spills on to your clothing, change the clothing.
- Store coolant properly in a suitable container and keep out of the reach of children.

WARNING
Danger of scalding The coolant heats up and is under high pressure when the vehicle is operated.
- Do not open the radiator, the radiator hoses, or other cooling system components if the engine or the cooling system are at operating temperature.
- Allow the cooling system and the engine to cool down before you open the radiator, the radiator hoses, or other components of the cooling system.
- In the event of scalding, rinse the area affected immediately with lukewarm water.

Condition: The engine is cold

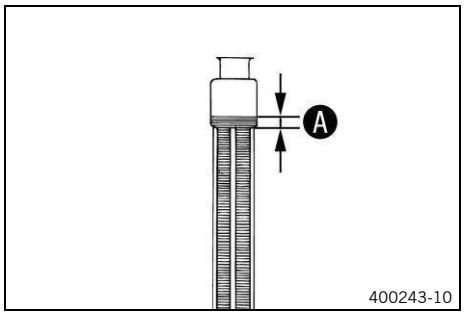

- Stand the motorcycle upright on a level surface.
- Take off the radiator cap.
- Check the frost protection in the coolant.

−45 °C … −25 °C (−49.0 °F … −13.0 °F)

  » If the frost protection in the coolant does not match the specified value:
    - Correct the frost protection in the coolant.
- Check the coolant level in the radiator.

Coolant level Ⓐ above the radiator fins	10 mm (0.39 in)

» If the coolant level does not meet the specifications:
– Correct the coolant level.

coolant	
Coolant (p. 176) Antifreeze protection to at least: −25 °C (−13.0 °F)	0.95 l (0.251 liq. gal_{US})

– Mount the radiator cap.

15.3 Checking the coolant level

WARNING

Health hazard Coolant is harmful to health.

– Keep coolant out of the reach of children.
– Do not allow coolant to come into contact with skin, eyes, or clothing.
– Consult a doctor immediately if coolant has been ingested.
– Rinse the affected area immediately with plenty of water in the event of contact with skin.
– Rinse eyes thoroughly with water and consult a doctor immediately if coolant comes into contact with eyes.
– If coolant spills on to your clothing, change the clothing.
– Store coolant properly in a suitable container and keep out of the reach of children.

WARNING

Danger of scalding The coolant heats up and is under high pressure when the vehicle is operated.

– Do not open the radiator, the radiator hoses, or other cooling system components if the engine or the cooling system are at operating temperature.
– Allow the cooling system and the engine to cool down before you open the radiator, the radiator hoses, or other components of the cooling system.
– In the event of scalding, rinse the area affected immediately with lukewarm water.

Condition: The engine is cold

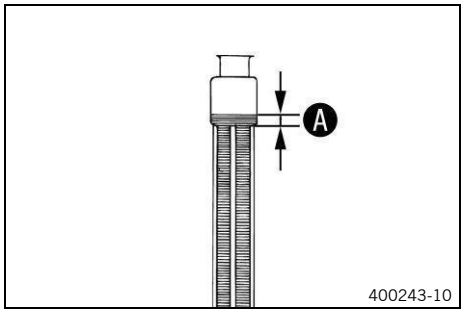

– Stand the motorcycle upright on a level surface.
– Take off the radiator cap.
– Check the coolant level in the radiator.

Coolant level A above the radiator fins	10 mm (0.39 in)

» If the coolant level does not meet the specifications:
– Correct the coolant level.

coolant	
Coolant (p. 176) Antifreeze protection to at least: −25 °C (−13.0 °F)	0.95 l (0.251 liq. gal_{US})

– Mount the radiator cap.

15.4 Draining the coolant

WARNING

Health hazard Coolant is harmful to health.

- Keep coolant out of the reach of children.
- Do not allow coolant to come into contact with skin, eyes, or clothing.
- Consult a doctor immediately if coolant has been ingested.
- Rinse the affected area immediately with plenty of water in the event of contact with skin.
- Rinse eyes thoroughly with water and consult a doctor immediately if coolant comes into contact with eyes.
- If coolant spills on to your clothing, change the clothing.
- Store coolant properly in a suitable container and keep out of the reach of children.

WARNING

Danger of scalding The coolant heats up and is under high pressure when the vehicle is operated.

- Do not open the radiator, the radiator hoses, or other cooling system components if the engine or the cooling system are at operating temperature.
- Allow the cooling system and the engine to cool down before you open the radiator, the radiator hoses, or other components of the cooling system.
- In the event of scalding, rinse the area affected immediately with lukewarm water.

Condition: The engine is cold

Preparatory work

(XC–F)

- Remove the skid plate. (p. 64)

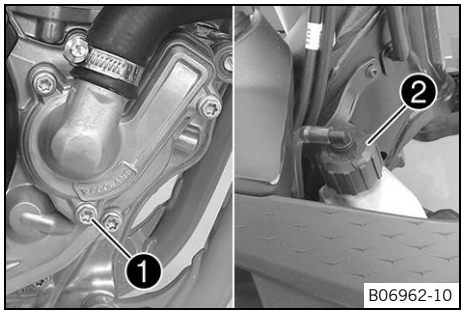

Main work

- Stand the motorcycle upright.
- Place an appropriate container under the water pump cover.
- Remove screw 1.
- Take off radiator cap 2.
- Completely drain the coolant.
- Mount screw 1 with the new sealing ring and tighten.

Screw, water pump cover	
M6	10 Nm (7.4 ft·lb$_f$)

15.5 Refilling the coolant

WARNING

Health hazard Coolant is harmful to health.

- Keep coolant out of the reach of children.
- Do not allow coolant to come into contact with skin, eyes, or clothing.
- Consult a doctor immediately if coolant has been ingested.
- Rinse the affected area immediately with plenty of water in the event of contact with skin.
- Rinse eyes thoroughly with water and consult a doctor immediately if coolant comes into contact with eyes.
- If coolant spills on to your clothing, change the clothing.
- Store coolant properly in a suitable container and keep out of the reach of children.

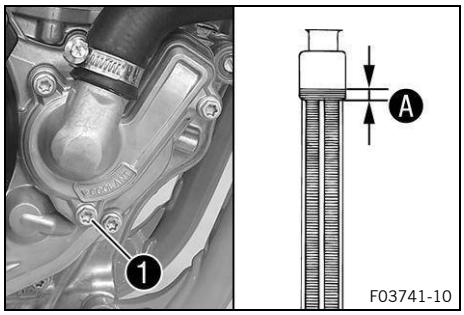

Main work

– Make sure that screw ❶ is tightened.
– Stand the motorcycle upright.
– Pour coolant in up to level Ⓐ above the radiator fins.

Distance Ⓐ above the radiator fins	10 mm (0.39 in)

coolant	
Coolant (p. 176) Antifreeze protection to at least: −25 °C (−13.0 °F)	0.95 l (0.251 liq. gal_{US})

– Mount the radiator cap.
– Go for a short test ride.
– Check the coolant level. (p. 125)

Reworking
(XC–F)

– Install the skid plate. (p. 65)

15.6 Changing the coolant

WARNING
Health hazard Coolant is harmful to health.
– Keep coolant out of the reach of children.
– Do not allow coolant to come into contact with skin, eyes, or clothing.
– Consult a doctor immediately if coolant has been ingested.
– Rinse the affected area immediately with plenty of water in the event of contact with skin.
– Rinse eyes thoroughly with water and consult a doctor immediately if coolant comes into contact with eyes.
– If coolant spills on to your clothing, change the clothing.
– Store coolant properly in a suitable container and keep out of the reach of children.

WARNING
Danger of scalding The coolant heats up and is under high pressure when the vehicle is operated.
– Do not open the radiator, the radiator hoses, or other cooling system components if the engine or the cooling system are at operating temperature.
– Allow the cooling system and the engine to cool down before you open the radiator, the radiator hoses, or other components of the cooling system.
– In the event of scalding, rinse the area affected immediately with lukewarm water.

Condition: The engine is cold

Preparatory work
(XC–F)

– Remove the skid plate. (p. 64)

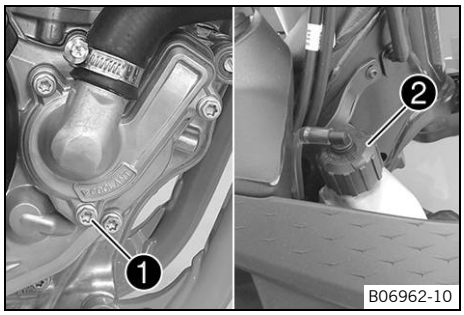

Main work

– Stand the motorcycle upright.
– Place an appropriate container under the water pump cover.
– Remove screw ❶.
– Take off radiator cap ❷.
– Completely drain the coolant.

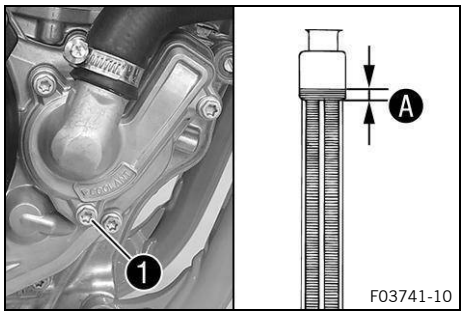

– Mount screw ❶ with the new sealing ring and tighten.

Screw, water pump cover	
M6	10 Nm (7.4 ft·lb_f)

– Pour coolant in up to level Ⓐ above the radiator fins.

Distance Ⓐ above the radiator fins	10 mm (0.39 in)

coolant	
Coolant (p. 176) Antifreeze protection to at least: −25 °C (−13.0 °F)	0.95 l (0.251 liq. gal_{US})

– Mount the radiator cap.
– Go for a short test ride.
– Check the coolant level. (p. 125)

Reworking
(XC–F)

– Install the skid plate. (p. 65)

16.1 Checking the play in the throttle cable

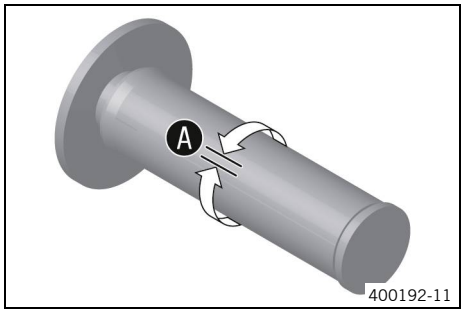

– Check the throttle grip for smooth operation.
– Move the handlebar to the straight-ahead position. Turn the throttle twist grip back and forth slightly and determine the play in throttle cable A.

Throttle cable play	3 mm … 5 mm (0.12 in … 0.20 in)

» If the throttle cable play does not meet the specified value:
  – Adjust the throttle cable play. (p. 129)

– Press the cold start button in all the way to the stop.
✓ When the throttle twist grip is turned forward, the cold start button jumps back to the start position.
» If the cold start button does not return to its original position:
  – Adjust the throttle cable play. (p. 129)

DANGER
Danger of poisoning Exhaust gases are toxic and inhaling them may result in unconsciousness and death.
– Always ensure that there is sufficient ventilation when running the engine.
– Use suitable exhaust extraction when starting or running the engine in an enclosed space.

– Start the engine and let it run at idle speed. Move the handlebar back and forth over the entire steering range.

The idle speed must not change.

» If the idle speed changes:
  – Adjust the throttle cable play. (p. 129)

16.2 Adjusting the throttle cable play

Note
If the correct routing of the throttle cables has already been secured, the fuel tank does not need to be removed.

Preparatory work
– Remove the seat. (p. 77)
– Remove the fuel tank. (p. 84)
– Check the throttle cable routing. (p. 93)

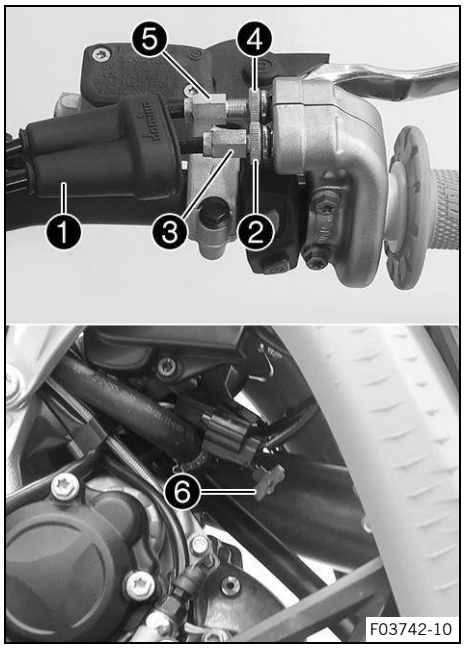

Main work

- Move the handlebar to the straight-ahead position.
- Push back boot ❶.
- Loosen nut ❷.
- Screw adjusting screw ❸ in as far as possible.
- Loosen nut ❹.
- Press cold start button ❻ all the way to the stop.
- Turn adjusting screw ❺ so that the cold start button moves to the basic position when the throttle twist grip is turned forward.
- Tighten nut ❹.
- Turn adjusting screw ❸ so that there is play in the throttle cable at the throttle twist grip.

Throttle cable play	3 mm … 5 mm (0.12 in … 0.20 in)

- Tighten nut ❷.
- Slide on boot ❶.
- Check the throttle grip for smooth operation.

Reworking

- Check the play in the throttle cable. (p. 129)

16.3 Adjusting the characteristic map of the throttle response

Note

On the throttle grip, the characteristic map of the throttle response is changed by changing the guide plate. A guide plate with a different characteristic map is supplied.

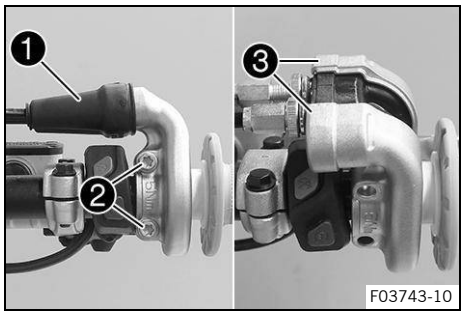

Main work

- Push back boot ❶.
- Remove screws ❷ and half-shells ❸.
- Detach the throttle cables and take off the grip tube.

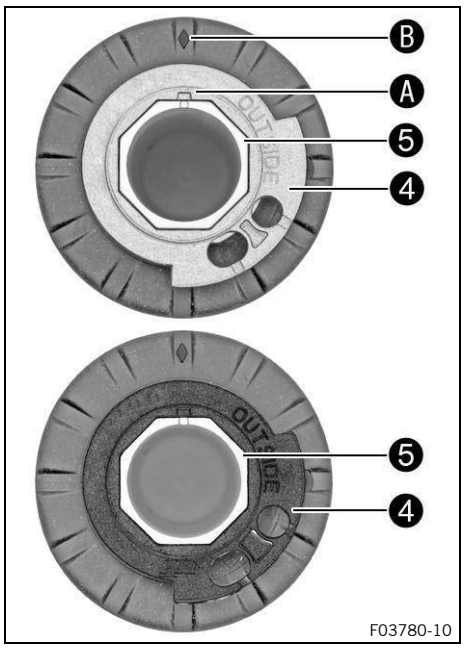

– Remove guide plate ❹ from handle tube ❺.
– Position the required guide plate on the grip tube.

The label **OUTSIDE** must be visible. Marking Ⓐ must be positioned at marking Ⓑ.

Black guide plate (A46002014000)
Work material (Alternative 1 / 1)
Gray guide plate (A48002014000)

Note

The gray guide plate opens the throttle valve more slowly.

The black guide plate opens the throttle valve more quickly.

The black guide plate is already mounted when the vehicle is delivered.

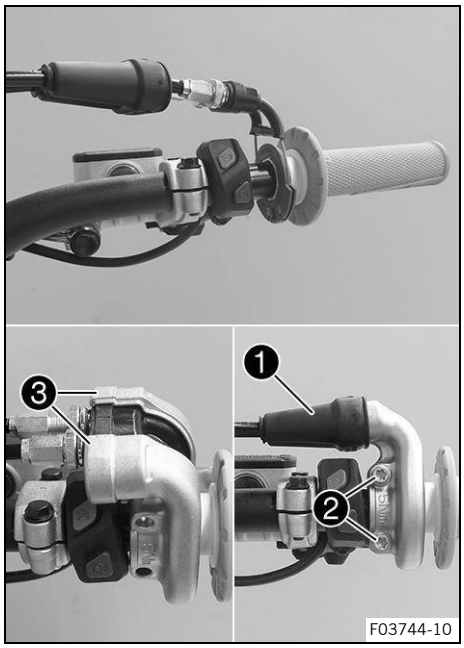

– Clean the outside of the handlebar and the inside of the grip tube. Mount the grip tube on the handlebar.
– Attach the throttle cables to the guide plate and route correctly.
– Position half-shells ❸, mount and tighten screws ❷.

Screw, throttle twist grip	
M6×20	5 Nm (3.7 ft·lb$_f$)

– Slide on sleeve ❶ and check the throttle grip for ease of movement.

Reworking

– Check the play in the throttle cable. (p. 129)

16.4 Changing the mapping

Note
The desired engine characteristic can be activated using the combination switch.
The setting most recently selected is activated again when restarting.
Traction control can also be activated in each mapping.
The mapping can also be changed during the ride.

– Select one of the following alternatives.

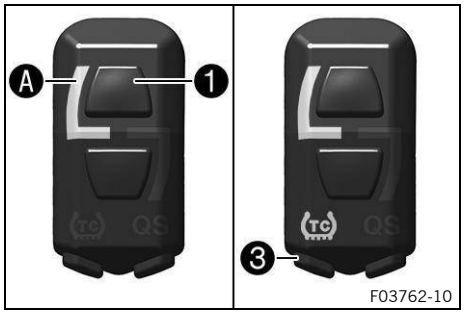

Activating STANDARD mapping

– Press button ❶.

Engine speed	< 4,000 rpm (< 66.67 Hz)

✓ Indicator light Ⓐ lights up.
✓ STANDARD: balanced response

Note
Traction control can be activated additionally using TC button ❸.

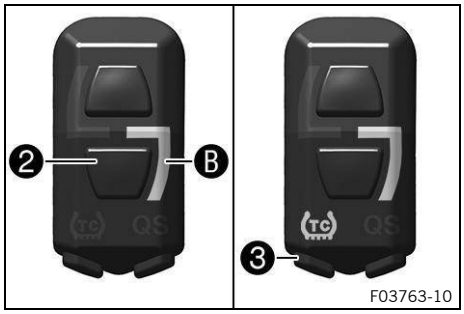

Activating ADVANCED mapping

– Press button ❷.

Engine speed	< 4,000 rpm (< 66.67 Hz)

✓ Indicator light Ⓑ lights up.
✓ ADVANCED: direct response

Note
Traction control can be activated additionally using TC button ❸.

16.5 adjusting the idle speed

WARNING
Danger of accidents The engine may suddenly come to a halt if the idle speed is set too low.
– Set the idle speed to the specified value.

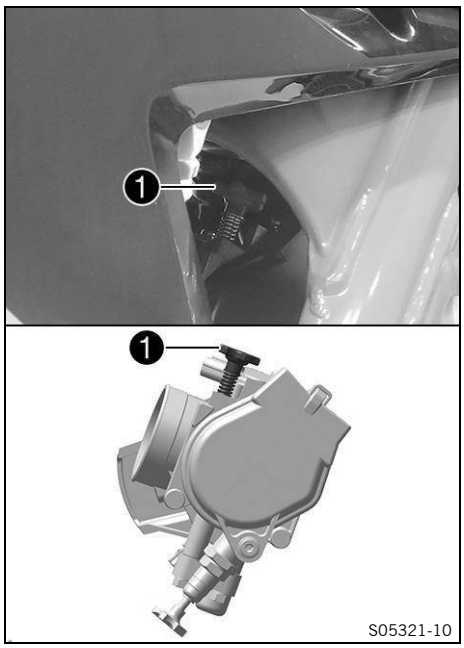

– Run the engine until warm.
– Check whether the cold start button has returned to its basic position.

DANGER
Danger of poisoning Exhaust gases are toxic and inhaling them may result in unconsciousness and death.
– Always ensure that there is sufficient ventilation when running the engine.
– Use suitable exhaust extraction when starting or running the engine in an enclosed space.

– Adjust the idle speed by turning idle speed adjustment screw 1 using a suitable rpm gauge.

Make the adjustment in small steps.	
idle speed	2,250 rpm … 2,350 rpm (37.50 Hz … 39.17 Hz)

Note
Turning counterclockwise lowers the idle speed.
Turning clockwise increases the idle speed.
An incorrect idle speed can have a negative impact on overall engine running.

16.6 Programming the throttle valve position

Note
If the control unit detects that the throttle valve position at idle speed needs to be reprogrammed, then the malfunction indicator lamp flashes 2x per second.

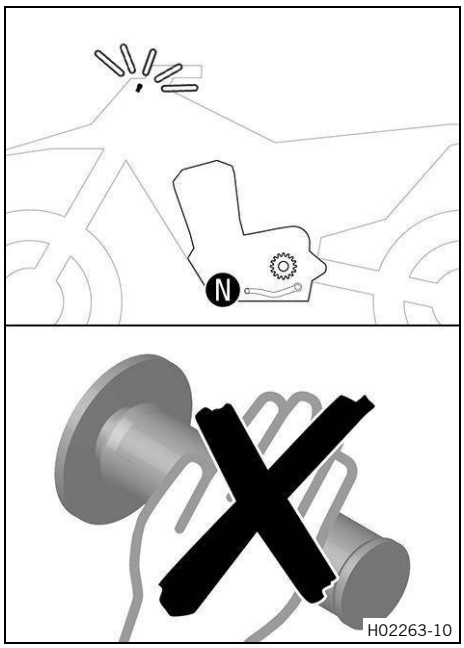

DANGER

Danger of poisoning Exhaust gases are toxic and inhaling them may result in unconsciousness and death.

- Always ensure that there is sufficient ventilation when running the engine.
- Use suitable exhaust extraction when starting or running the engine in an enclosed space.

- Allow the vehicle to run at idle speed.
  ✓ The malfunction indicator lamp stops flashing once programming is completed.

Note

If the engine becomes too warm, perform a cool-down ride at medium speed.

After this, do not switch off the engine, but leave it running at idle speed until the programming is finished.

16.7 Checking the basic position of the gear shift lever

Note

When driving, the gear shift lever must not touch the rider's boot when in the basic position.

If the shift lever is permanently touching the boot, the transmission will be subject to excessive load; this can cause a malfunction of the quickshifter.

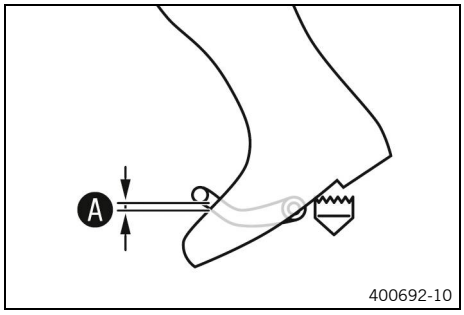

- Sit on the vehicle in the riding position and measure the distance A between the upper edge of your boot and the shift lever.

Distance between the gear shift lever and upper edge of boot	10 mm … 20 mm (0.39 in … 0.79 in)

» If the distance does not meet the specifications:
  - Adjust the basic position of the gear shift lever. (p. 134)

16.8 Adjusting the basic position of the gear shift lever

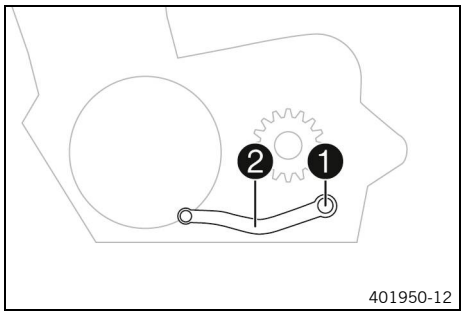

- Remove screw 1 with the washers and take off shift lever 2.

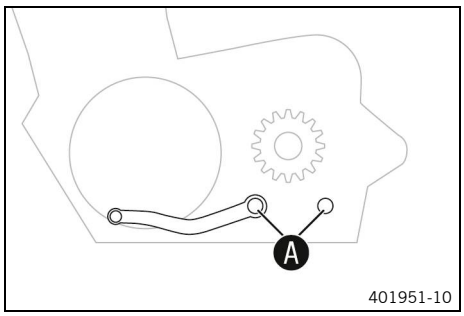

– Clean gear teeth A of the shift lever and shift shaft.
– Mount the gear shift lever on the shift shaft in the desired position and engage the toothing.

The gear shift lever must not come into contact with any other vehicle components during the shift procedure.

Note
The range of adjustment is limited.

– Mount and tighten screw 1 with washers.

Screw, shift lever	
M6	14 Nm (10.3 ft·lb$_f$) **Loctite® 243**

17.1 Changing the fuel screen

DANGER

Fire hazard Fuel is highly flammable.

The fuel in the fuel tank expands when warm and can escape if overfilled.

- Do not refuel the vehicle in the vicinity of open flames, glowing, or smoldering objects.
- Make sure that nobody smokes in the vicinity of the vehicle during the refueling process.
- Switch off the engine for refueling.
- Make sure that no fuel is spilled; particularly not on hot parts of the vehicle.
- If any fuel is spilled, wipe it up immediately.
- Do not overfill the fuel tank.

WARNING

Danger of poisoning Fuel is harmful to health.

- Do not allow fuel to come into contact with skin, eyes, or clothing.
- Consult a doctor immediately if fuel has been ingested.
- Do not inhale fuel vapors.
- Rinse the affected area immediately with plenty of water in the event of contact with skin.
- Rinse eyes thoroughly with water and consult a doctor immediately if fuel comes into contact with eyes.
- If fuel spills on to your clothing, change the clothing.
- Store fuel properly in a suitable container and keep out of the reach of children.

NOTE

Environmental hazard Improper handling of fuel is dangerous to the environment.

- Do not allow fuel to enter the groundwater, the soil, or the sewage system.

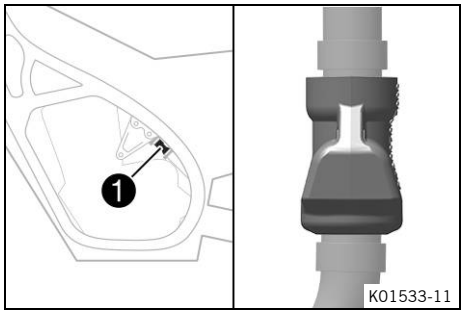

- Remove protection cap 1 of the fuel line.

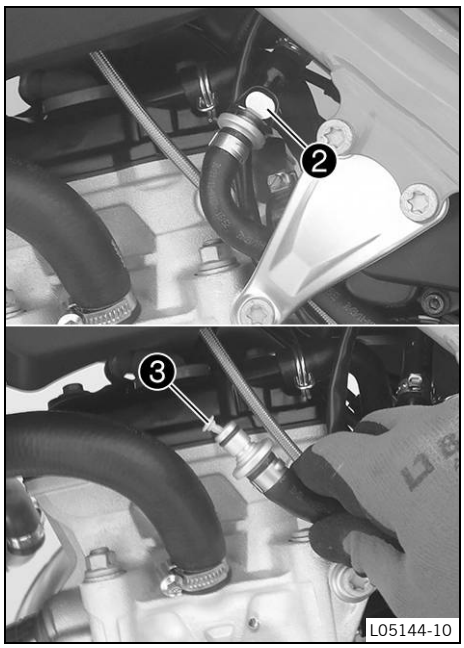

– Clean quick-lock coupling ❷ thoroughly with compressed air.

Dirt must not enter into the fuel line. Dirt in the fuel line clogs the injector!

– Disconnect the quick-lock coupling.

Note
Remaining fuel may flow out of the fuel hose.

– Pull fuel screen ❸ out of the connecting piece.
– Slide the new fuel screen all the way into the connecting piece.
– Spray silicone spray onto a lint-free cleaning cloth and lightly lubricate the O-ring of the quick-lock coupling.

Silicone spray (p. 176)

– Join quick-lock coupling ❷ of the fuel line.

DANGER
Danger of poisoning Exhaust gases are toxic and inhaling them may result in unconsciousness and death.
– Always ensure that there is sufficient ventilation when running the engine.
– Use suitable exhaust extraction when starting or running the engine in an enclosed space.

– Start the engine and check the response.

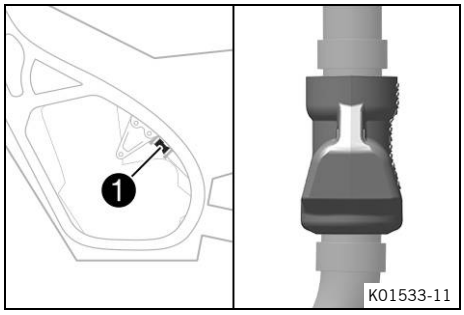

– Mount protection cap ❶ of the fuel line.

17.2 Checking the engine oil level

Note
The engine oil level can be checked when the engine is cold or warm.

Preparatory work
– Stand the motorcycle upright on a level surface.

Main work
– Select one of the following alternatives.

Condition: The engine is cold

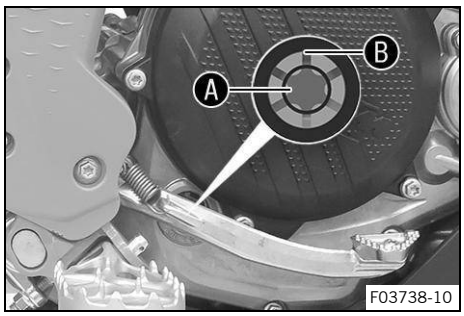

– Check the engine oil level.

The engine oil reaches the middle of viewer Ⓐ.

» If the engine oil does not reach the middle of level viewer Ⓐ:
  – Add engine oil. (p. 140)

Condition: The engine is at operating temperature

– Check the engine oil level.

After switching off the engine, wait one minute before checking the level.
The engine oil must be between the Ⓐ and Ⓑ markings .

» If the engine oil is not between the Ⓐ and Ⓑ markings:
  – Add engine oil. (p. 140)

17.3 Changing the engine oil and oil filter, cleaning the oil screen

WARNING

Danger of scalding Engine and gear oil heat up when the motorcycle is operated.

– Wear suitable protective clothing and safety gloves.
– In the event of scalding, rinse the area affected immediately with lukewarm water.

NOTE

Environmental hazard Hazardous substances cause environmental damage.

– Dispose of oils, grease, filters, fuel, cleaning agents, brake fluid, etc. correctly and in accordance with the applicable regulations.

Condition: The engine is at operating temperature

Preparatory work

– Park the motorcycle on a level surface.

(XC–F)

– Remove the skid plate. (p. 64)

Main work

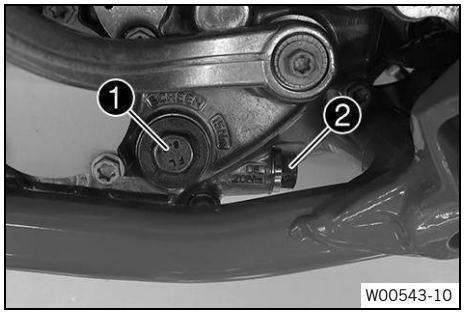

– Position an appropriate container under the engine.
– Remove screw plug ❶ with oil screen and the O-rings.
– Remove oil drain plug ❷ with the magnet and seal ring.

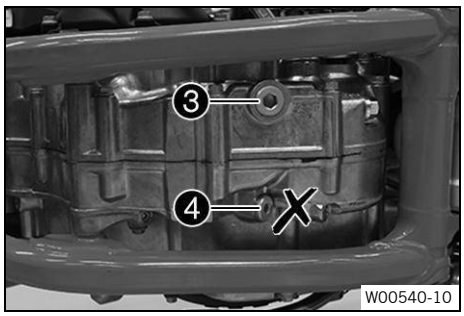

– Remove screw plug ❸ with O-ring.

Do not remove screw ❹.

– Allow the engine oil to drain completely.
– Thoroughly clean the parts and the sealing surfaces.
– Mount and tighten screw plug ❸ with new O-ring.

Screw plug, crankcase	
M14×1.5	15 Nm (11.1 ft·lb$_f$)

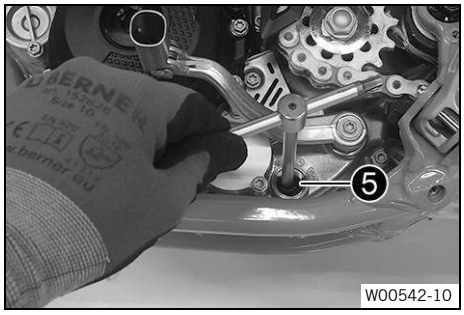

– Position oil screen ❺ with the O-rings on a pin wrench.
– Position the pin wrench through the drill hole of the screw plug in the opposite section of the engine case.
– Push the oil screen all the way into the engine case.

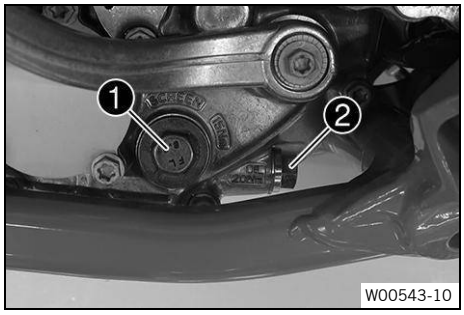

– Mount and tighten screw plug ❶ with O-ring.

Plug, oil screen	
M20×1.5	15 Nm (11.1 ft·lb$_f$)

– Mount and tighten oil drain plug ❷ with the magnet and a new seal ring.

Oil drain plug with magnet	
M12×1.5	20 Nm (14.8 ft·lb$_f$)

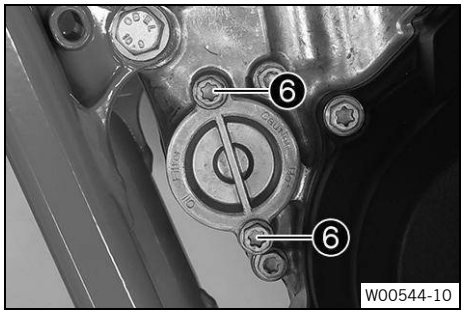

– Remove screws ❻.
– Take off the oil filter cover with the O-ring.

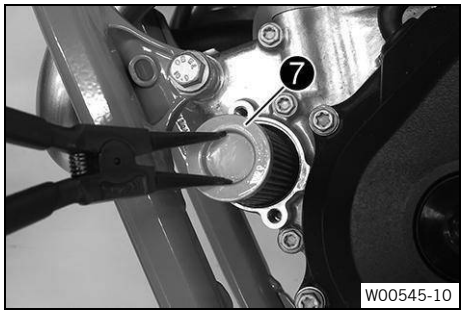

– Pull oil filter ❼ out of the oil filter housing.

Lock ring plier (51012011000)

– Allow the engine oil to drain completely.
– Thoroughly clean the parts and the sealing surfaces.

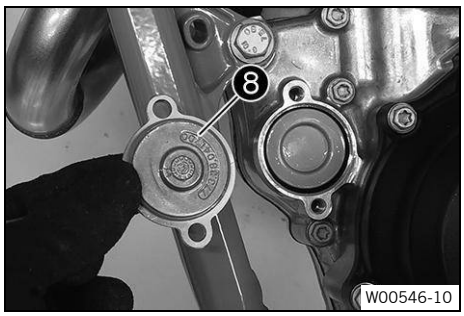

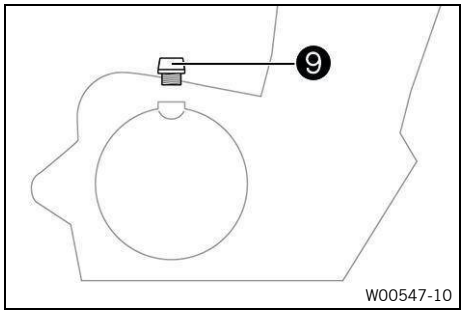

– Lay the motorcycle on its side and fill the oil filter housing to about ⅓ full with engine oil.
– Fill the oil filter with engine oil and position the oil filter in the housing.
– Oil the O-ring of the oil filter cover and mount it together with oil filter cover ❽.
– Mount and tighten the screws.

Screw, oil filter cover	
M6	10 Nm (7.4 ft·lb_f)

– Stand the motorcycle upright.
– Remove filler plug ❾ with the O-ring, and fill up with engine oil.

engine oil	
Engine oil (10W/50) (p. 175) fully synthetic	1.0 l (0.26 liq. gal_{US})

Note
Too little engine oil or poor-quality engine oil will result in premature wear of the engine.

– Mount and tighten the oil plug together with the O-ring.

DANGER
Danger of poisoning Exhaust gases are toxic and inhaling them may result in unconsciousness and death.
– Always ensure that there is sufficient ventilation when running the engine.
– Use suitable exhaust extraction when starting or running the engine in an enclosed space.

– Start the engine and check it for leaks.

Reworking
(XC–F)
– Install the skid plate. (p. 65)
– Check the engine oil level. (p. 137)

17.4 Adding engine oil

Note
Too little engine oil or poor-quality engine oil will result in premature wear of the engine.

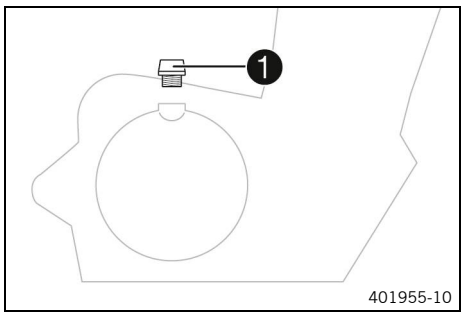

– Remove oil plug ❶ with O-ring.
– Add the same engine oil used when the last oil change was carried out.

engine oil	
Engine oil (10W/50) (p. 175) fully synthetic	1.0 l (0.26 liq. gal_{US})

Note
In order to achieve optimal engine oil performance, it is not advisable to mix different engine oils.
KTM recommends changing the engine oil if necessary.

– Mount and tighten the oil plug together with the O-ring.

DANGER
Danger of poisoning Exhaust gases are toxic and inhaling them may result in unconsciousness and death.
– Always ensure that there is sufficient ventilation when running the engine.
– Use suitable exhaust extraction when starting or running the engine in an enclosed space.

– Start the engine and check it for leaks.

18.1 Cleaning the motorcycle

NOTE

Material damage Components can be damaged or destroyed if a high-pressure cleaner is used incorrectly.

The high pressure forces water into the electrical components, socket connectors, clutch cables, and bearings, etc.

Too high a pressure can cause malfunctions and destroy components.

– Do not direct the water jet directly on to electrical components, socket connectors, clutch cables, or bearings.
– Maintain a minimum distance between the nozzle of the high-pressure cleaner and the component.

Minimum distance	60 cm (23.6 in)

NOTE

Environmental hazard Hazardous substances cause environmental damage.

– Dispose of oils, grease, filters, fuel, cleaning agents, brake fluid, etc. correctly and in accordance with the applicable regulations.

Note

To maintain the value and appearance of the motorcycle over a long period, clean it regularly.

Avoid direct sunshine when cleaning the motorcycle.

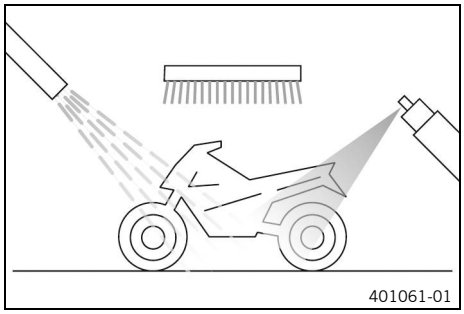

– Seal the exhaust system to prevent water from entering into it.
– Remove loose dirt first with a soft jet of water.
– Spray the heavily soiled parts with a standard commercial motorcycle cleaner and clean using a brush.

Never apply motorcycle cleaner to a dry vehicle; always rinse the vehicle with water first.

Environmentally neutral universal cleaning agent
(p. 178)

Note

Use warm water containing standard motorcycle cleaner and a soft sponge.

– After rinsing the motorcycle with a gentle spray of water, allow it to dry thoroughly.
– Remove the cover from the exhaust system.

WARNING

Danger of accidents Moisture and dirt impair the brake system.

– Brake carefully several times to dry out and remove dirt from the brake pads and the brake discs.

– After cleaning, ride the vehicle a short distance until the engine warms up.

Note
The heat produced causes water to evaporate at inaccessible locations in the engine and on the brake system.

– Push back the protection caps of the handlebar controls to allow any water that has penetrated to evaporate.
– After the motorcycle has cooled off, lubricate all moving parts and pivot points.
– Clean the chain. (p. 88)

WARNING
Danger of accidents Oil, grease or wax on the brake discs reduces the brake action.
– Always keep the brake discs free of oil, fat and wax.
– Clean the brake discs with brake cleaner when necessary.

– Treat bare metal (except for brake discs and the exhaust system) with an anticorrosive.

Preserving materials (p. 178)

– Treat all plastic parts and powder-coated parts with a mild cleaning and care product.

Cleaning agents for plastics, glass, lacquers, metals, windshields and visors (p. 178)

19.1 Storage

WARNING

Danger of poisoning Fuel is harmful to health.

- Do not allow fuel to come into contact with skin, eyes, or clothing.
- Consult a doctor immediately if fuel has been ingested.
- Do not inhale fuel vapors.
- Rinse the affected area immediately with plenty of water in the event of contact with skin.
- Rinse eyes thoroughly with water and consult a doctor immediately if fuel comes into contact with eyes.
- If fuel spills on to your clothing, change the clothing.
- Store fuel properly in a suitable container and keep out of the reach of children.

Note

If the vehicle will not be ridden for an extended period, additional steps are recommended.

Before storing the motorcycle, check all parts for function and wear. If service, repairs, or replacements are necessary, you should do this during the storage period (less overload of the authorized partner). This allows you to avoid long waiting periods when the next season starts.

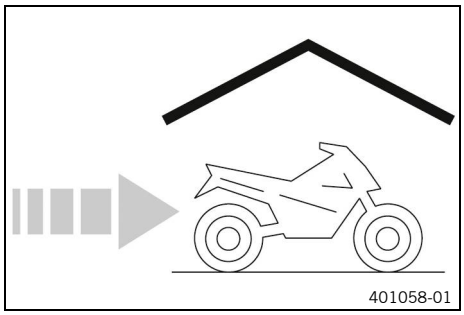

- When refueling for the last time before taking the motorcycle out of service, add fuel additive.

Fuel additive (p. 174)

- Refuel. (p. 40)

Tip

Fill the fuel tank completely as specified, using fuel with the lowest possible ethanol content.

- Clean the motorcycle. (p. 142)
- Change the engine oil and oil filter, clean the oil screen. (p. 138)
- Check the frost protection and coolant level. (p. 124)
- Check the tire pressure. (p. 114)
- Remove the 12 V battery. (p. 116)
- Charge the 12 V battery. (p. 118)

Ideal charging and storage temperature of the lithium-ion battery	10 °C … 20 °C (50.0 °F … 68.0 °F)

- Store the vehicle in a dry location that is not subject to large fluctuations in temperature.

Note

KTM recommends jacking up the motorcycle.

- Raise the motorcycle with a lift stand. (p. 61)

Cover the motorcycle with a tarp or cover that is permeable to air.
Do not use non-porous materials because they prevent humidity from escaping and thus cause corrosion.

Note

Avoid running the engine of a motorcycle in storage for a short time only. Because the engine will not warm up sufficiently, the water vapor produced during combustion will condense, causing engine parts and the exhaust system to rust.

19.2 Preparing for use after storage

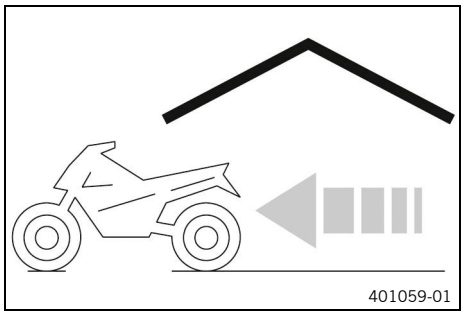

- Install the 12 V battery. (p. 117)
- Remove the motorcycle from the lift stand. (p. 61)
- Perform checks and maintenance measures when preparing for use. (p. 33)
- Take a test ride.

20.1 troubleshooting

Cause	Finding	Remedy
The engine does not turn over when the start button is actuated	Operating error 12 V battery discharged Main fuse blown Starter relay defective Starter motor defective	– Carry out the starting procedure. (p. 33) – Charge the 12 V battery. (p. 118) – Check the charging voltage. – Check the open-circuit current. – Check the stator winding of the alternator. – Change the main fuse. (p. 121) – Check the starter relay. – Check the starter motor.
The engine turns but does not start	Quick-lock coupling not joined Fuel screen in the quick-lock coupling is clogged Idle speed is not set correctly Spark plug sooty or wet Plug gap of spark plug too wide Short-circuit cable in wiring harness frayed, kill switch faulty Malfunction in the electronic fuel injection	– Join quick-lock couplings. – Change the fuel screen. (p. 136) – Adjust the idle speed. (p. 132) – Clean and dry the spark plug and spark plug connector, or change if necessary. – Adjust plug gap. Plug gap of spark plug: 1.0 mm (0.039 in) – Check the wiring harness. (Visual check). – Check the electrical system. – Read out the fault memory using the diagnostics tool.
Engine does not speed up	Malfunction in the electronic fuel injection	– Read out the fault memory using the diagnostics tool.
Engine has too little power	Air filter is very dirty Fuel filter is very dirty Malfunction in the electronic fuel injection Exhaust system leaks, deformed or too little damping material in the silencer Valve clearance too little	– Clean the air filter and air filter box. (p. 81) – Change the fuel filter. – Read out the fault memory using the diagnostics tool. – Check exhaust system for damage. – Change the damping material on the main silencer. (p. 84) – Adjust the valve clearance.
The engine dies during the trip	Lack of fuel	– Refuel. (p. 40)
Engine overheats	Too little coolant in cooling system Too little air stream Radiator fins very dirty Foam formation in the cooling system Bent radiator hose	– Check the transmission and cooling system for leaks. – Check the coolant level. (p. 125) – Switch off the engine when standing. – Clean the radiator fins. – Drain the coolant. (p. 126) – Refill the coolant. (p. 126) – Change the radiator hose.

Cause	Finding	Remedy
Malfunction indicator lamp lights up or flashes	Malfunction in the electronic fuel injection	– Check wiring for damage and electrical plug-in connectors for corrosion and damage. – Read out the fault memory using the diagnostics tool.
High oil consumption	Engine vent hose bent The engine oil level is too high The engine oil is too thin (low viscosity) Piston or cylinder worn	– Route the vent hose without bends or change it if necessary. – Check the engine oil level. (p. 137) – Change the engine oil and oil filter, clean the oil screen. (p. 138) – Measure the piston/cylinder mounting clearance.
12 V battery discharged	12 V battery is not charging unwanted electrical load	– Check the charging voltage. – Check the stator winding of the alternator. – Check the open-circuit current.

21.1 Flash codes

Blink code for malfunction indicator light	Fi 02: Malfunction indicator light flashes 2x short
Error level condition	Crankshaft speed sensor – circuit fault The induction manifold pressure sensor delivers a normal signal (engine running), while the crankshaft speed sensor does not generate any signal at all. Time: ≥ 2.0 s

Blink code for malfunction indicator light	Fi 06: Malfunction indicator light flashes 6x short
Error level condition	Throttle valve position sensor circuit A – input signal too low Voltage: ≤ 0.352 V Time: ≥ 3 s Throttle valve position sensor circuit A – input signal too high Voltage: ≥ 4.785 V Time: ≥ 3 s

Blink code for malfunction indicator light	Fi 09: Malfunction indicator light flashes 9x short
Error level condition	Induction manifold pressure sensor – input signal too high Voltage: ≥ 4.121 V Time: ≥ 3 s Induction manifold pressure sensor – input signal too low Voltage: ≤ 0.215 V Time: ≥ 3 s

Blink code for malfunction indicator light	Fi 12: Malfunction indicator light flashes 1x long, 2x short
Error level condition	Coolant temperature sensor – input signal too high Voltage: ≥ 4.785 V Time: ≥ 3 s Coolant temperature sensor – input signal too low Voltage: ≤ 0.137 V Time: ≥ 3 s

Blink code for malfunction indicator light	Fi 13: Malfunction indicator light flashes 1x long, 3x short
Error level condition	Intake air temperature sensor – input signal too high Voltage: ≥ 4.824 V Time: ≥ 3 s Intake air temperature sensor – input signal too low Voltage: ≤ 0.195 V Time: ≥ 3 s

Blink code for malfunction indicator light	Fi 15: Failure indicator light flashes 1x long, 5x short
Error level condition	Tilt sensor – input signal too low Voltage: ≤ 0.176 V Time: ≥ 25.5 s Tilt sensor – open / input signal too high Voltage: ≥ 4.57 V Time: ≥ 25.5 s

Blink code for malfunction indicator light	Fi 21: Malfunction indicator light flashes 2x long, 1x short
Error level condition	Battery voltage – input voltage too high Engine control unit power supply: ≥ 15.98 V Time: ≥ 2 s

Blink code for malfunction indicator light	Fi 22: Failure indicator light flashes 2x long, 2x short
Error level condition	Gear position sensor – input signal too low Time: ≥ 0.1 s Gear position sensor – input signal too high Time: ≥ 0.1 s Gear position sensor malfunction

Blink code for malfunction indicator light	Fi 33: Malfunction indicator lamp flashes 3x long, 3x short
Error level condition	Injection valve cylinder 1 – circuit fault Time: ≥ 2.0 s

Blink code for malfunction indicator light	Fi 37: Malfunction indicator light flashes 3x long, 7x short
Error level condition	Ignition coil – circuit fault Time: ≥ 2.0 s

Blink code for malfunction indicator light	Fi 41: Malfunction indicator light flashes 4x long, 1x short
Error level condition	Fuel pump controller – short circuit to ground/open circuit The engine is switched off: ≥ 3 s Fuel pump controller - short circuit to plus The engine is switched off: ≥ 3 s

Blink code for malfunction indicator light	Fi 65: Failure indicator light flashes 6x long, 5x short
Error level condition	EEPROM – malfunction Read data and write data are different.

Blink code for malfunction indicator light	Fi 91: Failure indicator light flashes 9x long, 1x short
Error level condition	CAN bus communication – faulty

Blink code for malfunction indicator light	Fi Malfunction indicator lamp flashes continuously
Error level condition	THREF – internal malfunction of the engine control unit

22.1 Engine

22.1.1 Technical data - engine

Design	1-cylinder 4-stroke engine, water-cooled
Displacement	249.92 cm³ (15.2511 in³)
Stroke	48.5 mm (1.909 in)
Bore	81 mm (3.19 in)
Compression ratio	14.5:1
Control	DOHC, four valves controlled via cam lever, drive via timing chain
Valve diameter, intake	32.5 mm (1.280 in)
Valve diameter, exhaust	27.5 mm (1.083 in)
Valve clearance	
Intake at: 20 °C (68.0 °F)	0.08 mm … 0.15 mm (0.0031 in … 0.0059 in)
Exhaust at: 20 °C (68.0 °F)	0.12 mm … 0.19 mm (0.0047 in … 0.0075 in)
Crankshaft bearing	2-cylinder roller bearing
Big (bottom) end bearing	Plain bearing
Wrist pin bearing	Bearing bush
Piston	Forged light alloy
Piston rings	1 compression ring, 1 oil scraper ring
Engine lubrication	Pressure circulation lubrication with 2 trochoidal pumps
Primary transmission	24:72
Clutch	Multi-disc wet clutch / hydraulically activated
Transmission	
(SX-F models)	5 speed transmission, claw shifted
(XC–F)	6 speed transmission, claw shift
Gear ratios **(SX-F models)**	
1st gear	13:32
2nd Gear	16:32
3rd Gear	17:28
4th Gear	19:26
5th Gear	21:25
Gear ratios **(XC–F)**	
1st gear	13:33
2nd Gear	16:30
3rd Gear	18:26
4th Gear	22:26

5th Gear	23:23
6th Gear	26:22
Alternator	• 14 V • 77 W (0.103 hp)
Ignition system	Contactless controlled fully electronic ignition with digital ignition adjustment
Spark plug	NGK LMAR9AI-10
Plug gap of spark plug	1.0 mm (0.039 in)
Cooling	Liquid cooling, permanent circulation of coolant by water pump
Starting aid	Starter motor
idle speed	2,250 rpm … 2,350 rpm (37.50 Hz … 39.17 Hz)

22.1.2 Capacities - engine

engine oil	
Engine oil (10W/50) (p. 175) fully synthetic	1.0 l (0.26 liq. gal_{US})
coolant	
Coolant (p. 176) Antifreeze protection to at least: −25 °C (−13.0 °F)	0.95 l (0.251 liq. gal_{US})

22.2 Chassis

22.2.1 Technical data - chassis

Frame	Central tube frame made of chrome molybdenum steel tubing
Suspension travel: **(XC–F)**	
front	300 mm (11.81 in)
rear	300 mm (11.81 in)
Suspension travel: **(SX-F models)**	
front	310 mm (12.20 in)
rear	300 mm (11.81 in)
Triple clamp offset	22 mm (0.87 in)
Brake system	Disc brakes, floating brake calipers
Brake discs - diameter	
front	260 mm (10.24 in)
rear	220 mm (8.66 in)

Brake disc wear limit	
front	2.5 mm (0.098 in)
rear	3.5 mm (0.138 in)
Off-road tire pressure	
front	1.0 bar (14.5 psi)
rear	1.0 bar (14.5 psi)
Final drive	
(All SX-F except US)	14:52
(SX-F US)	14:51
(XC–F)	13:52
Chain	5/8 x 1/4"
Rear sprockets available	• 48 • 50 • 51 • 52
Steering head angle	63.9° (1.115 rad)
Wheelbase	1,493 ±10 mm (58.78 ±0.39 in)
Seat Height unloaded	958 mm (37.72 in)
Ground clearance unloaded	343 mm (13.50 in)
Weight without fuel approx.	
(SX-F EU and US)	101.5 kg (223.77 lb)
(BR)	101.7 kg (224.21 lb)
(XC–F)	104.8 kg (231.04 lb)
Maximum permissible front axle load	145 kg (319.7 lb)
Maximum permissible rear axle load	190 kg (418.9 lb)
Maximum permissible total weight	335 kg (738.5 lb)

22.2.2 Technical data - tires

Validity	Tire front	Rear tire
(BR)	**80/100 - 21 51M TT** Pirelli SCORPION MX 32 Mid-soft MST	**110/90 - 19 62M TT** Pirelli SCORPION MX 32 Midsoft NHS

Validity	Tire front	Rear tire
(SX-F EU and US)	**80/100 - 21 51M TT** Dunlop MX34F	**110/90 - 19 62M TT** Dunlop MX34
(XC–F)	**80/100 - 21 51M TT** Dunlop GEOMAX AT82F	**110/100 - 18 64M TT** Dunlop GEOMAX AT82
The tires specified represent one of the possible series production tires. For alternative manufacturers, if any, contact an authorized manufacturer or qualified tire dealership. If local road approval regulations apply, these and the respective technical specifications must be observed.		

22.2.3 fuel

Total fuel tank capacity, approx. **(SX-F EU and US)**	
Super unleaded (ROZ 95) (p. 174)	7.2 l (1.90 liq. gal_{US})
Total fuel tank capacity, approx. **(BR)**	
Super unleaded, type C (ROZ 95/RON 95/PON 91) (p. 174)	7.2 l (1.90 liq. gal_{US})
Total fuel tank capacity, approx. **(XC–F)**	
Super unleaded (ROZ 95) (p. 174)	8.5 l (2.25 liq. gal_{US})

22.3 Electrics

22.3.1 Electrics

12-V battery	HJTZ5S-FP-C	Lithium-ion battery Battery voltage: 12 V Nominal capacity: 2.0 Ah Maintenance-free

22.3.2 Fuses

Fuse	58011109105	5 A
Fuse	58011109110	10 A

22.3.3 Lamps

Dashboard illumination and indicator lights	LED

22.4 Fork

22.4.1 Technical data (All SX-F except US)

Fork part number	A460C105Y406000

Fork	**WP XACT AER**
Compression damping	
Comfort	17 clicks
Standard	12 clicks
Sport	7 clicks
Rebound damping	
Comfort	17 clicks
Standard	12 clicks
Sport	7 clicks
Air pressure	
Weight of rider: 65 kg … 75 kg (143.3 lb … 165.3 lb)	10.1 bar (146.5 psi)
Weight of rider: 75 kg … 85 kg (165.3 lb … 187.4 lb)	10.3 bar (149.4 psi)
Weight of rider: 85 kg … 95 kg (187.4 lb … 209.4 lb)	10.5 bar (152.3 psi)
Fork length	950 mm (37.40 in)

22.4.2 Capacities (All SX-F except US)

Oil capacity, right outer assembly	
Fork oil (48601166S1) (SAE 4) (p. 175)	240^{+10}_{-50} ml ($8.12^{+0.34}_{-1.69}$ fl. oz_{US})
Oil capacity, left outer assembly	
Fork oil (48601166S1) (SAE 4) (p. 175)	240^{+10}_{-50} ml ($8.12^{+0.34}_{-1.69}$ fl. oz_{US})
Oil capacity, right cartridge	
Fork oil (48601166S1) (SAE 4) (p. 175)	380 ml (12.85 fl. oz_{US})
Grease capacity, left cartridge	
Special grease (00062010053) (p. 176)	5 g (0.18 oz)

22.4.3 Technical data (SX-F US)

Fork part number	A460C155Y406000

Fork	**WP XACT AER**
Compression damping	
Comfort	17 clicks
Standard	12 clicks
Sport	7 clicks

Rebound damping	
Comfort	23 clicks
Standard	18 clicks
Sport	13 clicks
Air pressure	
Weight of rider: 65 kg … 75 kg (143.3 lb … 165.3 lb)	10.1 bar (146.5 psi)
Weight of rider: 75 kg … 85 kg (165.3 lb … 187.4 lb)	10.3 bar (149.4 psi)
Weight of rider: 85 kg … 95 kg (187.4 lb … 209.4 lb)	10.5 bar (152.3 psi)
Fork length	950 mm (37.40 in)

22.4.4 Capacities (SX-F US)

Oil capacity, right outer assembly	
Fork oil (48601166S1) (SAE 4) (p. 175)	240^{+10}_{-50} ml ($8.12^{+0.34}_{-1.69}$ fl. oz_{US})
Oil capacity, left outer assembly	
Fork oil (48601166S1) (SAE 4) (p. 175)	240^{+10}_{-50} ml ($8.12^{+0.34}_{-1.69}$ fl. oz_{US})
Oil capacity, right cartridge	
Fork oil (48601166S1) (SAE 4) (p. 175)	380 ml (12.85 fl. oz_{US})
Grease capacity, left cartridge	
Special grease (00062010053) (p. 176)	5 g (0.18 oz)

22.4.5 Technical data (XC–F)

Fork part number	A590C175Y402000

Fork	**WP XPLOR CC**
Compression damping	
Comfort	17 clicks
Standard	12 clicks
Sport	7 clicks
Rebound damping	
Comfort	23 clicks
Standard	18 clicks
Sport	13 clicks
Fork length	940 mm (37.01 in)
Spring rate	
Rider's weight: 65 kg … 75 kg (143.3 lb … 165.3 lb)	4.2 N/mm (23.98 lb_f/in)

Rider's weight: 75 kg … 85 kg (165.3 lb … 187.4 lb)	4.4 N/mm (25.12 lb_f/in)
Rider's weight: 85 kg … 95 kg (187.4 lb … 209.4 lb)	4.6 N/mm (26.27 lb_f/in)
Spring length with preload spacer(s)	478 mm (18.82 in)

22.4.6 Capacities (XC–F)

Oil capacity, outer assembly	
Fork oil (48601166S1) (SAE 4) (p. 175)	390 ml (13.19 fl. oz_{US})
Oil capacity, cartridge	
Fork oil (48601166S1) (SAE 4) (p. 175)	175 ml (5.92 fl. oz_{US})

22.5 Shock absorber

22.5.1 Technical data (All SX-F except US)

Shock absorber part number	A460C405Y408000

Shock absorber	**WP XACT LDS**
Low-speed compression damping	
Comfort	17 clicks
Standard	15 clicks
Sport	13 clicks
High-speed compression damping	
Comfort	2 turns (720°)
Standard	1.5 turns (540°)
Sport	1 turn (360°)
Rebound damping	
Comfort	17 clicks
Standard	15 clicks
Sport	13 clicks
Preload	8 mm (0.31 in)
Spring rate	
Weight of rider: 65 kg … 75 kg (143.3 lb … 165.3 lb)	39 N/mm (222.7 lb_f/in)
Weight of rider: 75 kg … 85 kg (165.3 lb … 187.4 lb)	42 N/mm (239.8 lb_f/in)
Weight of rider: 85 kg … 95 kg (187.4 lb … 209.4 lb)	45 N/mm (257.0 lb_f/in)

Spring length	240 mm (9.45 in)
Gas assisted	10 bar (145 psi)
Static sag	35 mm (1.38 in)
Rider sag	105 mm (4.13 in)
Installation position	456.3 mm (17.965 in)

22.5.2 Capacities (All SX-F except US)

Shock absorber oil	
Shock absorber oil (50180751S1) (SAE 2.5) (p. 176)	Fill to the maximum mark

22.5.3 Technical data (SX-F US)

Shock absorber part number	A460C455Y408000

Shock absorber	**WP XACT LDS**
Low-speed compression damping	
Comfort	17 clicks
Standard	15 clicks
Sport	13 clicks
High-speed compression damping	
Comfort	2 turns (720°)
Standard	1.5 turns (540°)
Sport	1 turn (360°)
Rebound damping	
Comfort	17 clicks
Standard	15 clicks
Sport	13 clicks
Preload	8 mm (0.31 in)
Spring rate	
Weight of rider: 65 kg … 75 kg (143.3 lb … 165.3 lb)	39 N/mm (222.7 lb_f/in)
Weight of rider: 75 kg … 85 kg (165.3 lb … 187.4 lb)	42 N/mm (239.8 lb_f/in)
Weight of rider: 85 kg … 95 kg (187.4 lb … 209.4 lb)	45 N/mm (257.0 lb_f/in)
Spring length	240 mm (9.45 in)

Gas assisted	10 bar (145 psi)
Static sag	35 mm (1.38 in)
Rider sag	105 mm (4.13 in)
Installation position	456.3 mm (17.965 in)

22.5.4 Capacities (SX-F US)

Shock absorber oil	
Shock absorber oil (50180751S1) (SAE 2.5) (p. 176)	Fill to half-full

22.5.5 Technical data (XC–F)

Shock absorber part number	A460C475Y408000

Shock absorber	**WP XACT LDS**
Low-speed compression damping	
Comfort	17 clicks
Standard	15 clicks
Sport	13 clicks
High-speed compression damping	
Comfort	2 turns (720°)
Standard	1.5 turns (540°)
Sport	1 turn (360°)
Rebound damping	
Comfort	17 clicks
Standard	15 clicks
Sport	13 clicks
Preload	8 mm (0.31 in)
Spring rate	
Weight of rider: 65 kg … 75 kg (143.3 lb … 165.3 lb)	39 N/mm (222.7 lb_f/in)
Weight of rider: 75 kg … 85 kg (165.3 lb … 187.4 lb)	42 N/mm (239.8 lb_f/in)
Weight of rider: 85 kg … 95 kg (187.4 lb … 209.4 lb)	45 N/mm (257.0 lb_f/in)
Spring length	240 mm (9.45 in)
Gas assisted	10 bar (145 psi)

Static sag	35 mm (1.38 in)
Rider sag	105 mm (4.13 in)
Installation position	456.3 mm (17.965 in)

22.5.6 Capacities (XC–F)

Oil capacity, shock absorber	
Shock absorber oil (50180751S1) (SAE 2.5) (p. 176)	Fill to the maximum mark

22.6 Tightening torque

22.6.1 Engine tightening torques

Oil nozzle for main bearing lubrication M4	0.8 Nm (0.59 ft·lb$_f$) **Loctite® 243**
Oil nozzle for clutch lubrication M4	0.8 Nm (0.59 ft·lb$_f$) **Loctite® 243**
Screw, oil nozzle bent for piston cooling M4	2.5 Nm (1.84 ft·lb$_f$) **Loctite® 243**
Jet, crank chamber ventilation M4	0.8 Nm (0.59 ft·lb$_f$) **Loctite® 243**
Hose clip, intake flange M4	3 Nm (2.2 ft·lb$_f$)
Detent arm screw M5	6 Nm (4.4 ft·lb$_f$) **Loctite® 243**
Screw, gear position sensor M5	5 Nm (3.7 ft·lb$_f$) **Loctite® 243**
Screw, clutch spring retainer M5	6 Nm (4.4 ft·lb$_f$)
Screw, oil pump cover M5	6 Nm (4.4 ft·lb$_f$) **Loctite® 243**
Oil pump idler gear fuse screw M5	6 Nm (4.4 ft·lb$_f$) **Loctite® 243**
Oil nozzle for piston cooling M5	2 Nm (1.5 ft·lb$_f$) **Loctite® 243**

Screw, bearing retainer M5	6 Nm (4.4 ft·lb_f) **Loctite® 243**
Stator screw M5	6 Nm (4.4 ft·lb_f) **Loctite® 243**
Alternator cover grub screw M5	2 Nm (1.5 ft·lb_f) **Loctite® 243**
Screw, crankshaft position sensor M5	6 Nm (4.4 ft·lb_f) **Loctite® 243**
Shift star screw M6	10 Nm (7.4 ft·lb_f) **Loctite® 243**
Screw, outer clutch cover M6×45	10 Nm (7.4 ft·lb_f)
Screw, engine case M6×70	10 Nm (7.4 ft·lb_f)
Screw, water pump cover M6×40	10 Nm (7.4 ft·lb_f)
Exhaust flange screw M6	10 Nm (7.4 ft·lb_f) **Loctite® 243**
Screw, guide rail M6	10 Nm (7.4 ft·lb_f) **Loctite® 243**
Screw, timing chain failure protection M6	10 Nm (7.4 ft·lb_f) **Loctite® 243**
Screw, starter motor M6	10 Nm (7.4 ft·lb_f)
Screw, outer clutch cover M6	10 Nm (7.4 ft·lb_f)
Screw, inner clutch cover M6	10 Nm (7.4 ft·lb_f)
Screw, clutch slave cylinder M6	10 Nm (7.4 ft·lb_f)
Screw, engine case M6	10 Nm (7.4 ft·lb_f)
Screw, oil filter cover M6	10 Nm (7.4 ft·lb_f)
Screw, shift lever M6	14 Nm (10.3 ft·lb_f) **Loctite® 243**
Screw, starter motor - intermediate gear M6	10 Nm (7.4 ft·lb_f) **Loctite® 243**

Screw, valve cover M6		8 Nm (5.9 ft·lb$_f$)
Stud, cylinder head M6		6 Nm (4.4 ft·lb$_f$) **Loctite® 243**
Nut, cylinder head M6		10 Nm (7.4 ft·lb$_f$)
Screw, water pump cover M6		10 Nm (7.4 ft·lb$_f$)
Nut, water pump impeller M6		6 Nm (4.4 ft·lb$_f$) **Loctite® 243**
Screw, ignition cover M6		10 Nm (7.4 ft·lb$_f$)
Screw, camshaft bearing bridge M7×1 Engine oil	1.	5 Nm (3.7 ft·lb$_f$)
	2.	14 Nm (10.3 ft·lb$_f$)
Slide rail screw M8		15 Nm (11.1 ft·lb$_f$) **Loctite® 243**
Crankshaft clamp screw plug M8		10 Nm (7.4 ft·lb$_f$)
Crankshaft fixing screw M8		hand-tight
Screw plug, cam lever shaft M10×1		8 Nm (5.9 ft·lb$_f$)
Screw, release for timing chain tensioner M10×1		8 Nm (5.9 ft·lb$_f$)
Front sprocket screw M10		60 Nm (44.3 ft·lb$_f$) **Loctite® 243**
Chain tension adjuster finger follower shaft plug M10×1		8 Nm (5.9 ft·lb$_f$)
Screw, rotor M10×1		70 Nm (51.6 ft·lb$_f$) Engine oil
Coolant temperature sensor M10×1.25		12 Nm (8.9 ft·lb$_f$)
Oil channel screw plug M10×1		15 Nm (11.1 ft·lb$_f$) **Loctite® 243**
Stud, cylinder head M10×1.25		20 Nm (14.8 ft·lb$_f$) **Loctite® 243**
Nut, cylinder head M10×1.25 Engine oil	1.	10 Nm (7.4 ft·lb$_f$)

Nut, cylinder head M10×1.25 Engine oil	2.	30 Nm (22.1 ft·lb$_f$)
	3.	180° (3.14 rad)
Spark plug M10×1		12 Nm (8.9 ft·lb$_f$)
Oil drain plug with magnet M12×1.5		20 Nm (14.8 ft·lb$_f$)
Screw plug, oil pressure control valve M12×1.5		20 Nm (14.8 ft·lb$_f$)
Screw plug, crankcase M14×1.5		15 Nm (11.1 ft·lb$_f$)
Nut, inner clutch hub M18×1.5		100 Nm (73.8 ft·lb$_f$)
Nut, primary gear M18LH×1.5		120 Nm (88.5 ft·lb$_f$) **Loctite® 243**
Plug, oil screen M20×1.5		15 Nm (11.1 ft·lb$_f$)
Screw, ignition cover M24×1.5		18 Nm (13.3 ft·lb$_f$)
Screw plug, timing chain tensioner M24×1.5		40 Nm (29.5 ft·lb$_f$)
Oil plug M24×3		hand-tight
Screw plug, alternator cover M24×1.5		18 Nm (13.3 ft·lb$_f$)
Fixing nut for main bearing inner ring M27×1		60 Nm (44.3 ft·lb$_f$) **Loctite® 243**

22.6.2 Chassis tightening torques

Air boot on throttle body	2.8 Nm (2.07 ft·lb$_f$)
Screw, radiator hoses clip	2.4 Nm (1.77 ft·lb$_f$)
Screw, spoiler and seat installation **EJOT PT®**	2.5 Nm (1.84 ft·lb$_f$)
Screw, fixed grip M4×12	5 Nm (3.7 ft·lb$_f$) **Loctite® 243**
Screw, hose clamp, throttle body M4	5 Nm (3.7 ft·lb$_f$)
Screw, throttle body cover M5×8	2.6 Nm (1.92 ft·lb$_f$)
Remaining nuts on chassis M5	5 Nm (3.7 ft·lb$_f$)

Remaining screws on chassis M5	5 Nm (3.7 ft·lb$_f$)
Screw, shock absorber adjusting ring M5×20	5 Nm (3.7 ft·lb$_f$)
Screw, battery terminal M5×12	2.5 Nm (1.84 ft·lb$_f$)
Screw, frame protector M5×10	3 Nm (2.2 ft·lb$_f$)
Nut, throttle cable on throttle body M6	3 Nm (2.2 ft·lb$_f$)
Screw, fuel tank spoiler on radiator M6×12	6 Nm (4.4 ft·lb$_f$)
Screw, battery holding bracket on subframe M6×12	6 Nm (4.4 ft·lb$_f$)
Screw, starter cable to starter relay M6	6 Nm (4.4 ft·lb$_f$)
Screw, chain guide on swingarm, rear M6×16	10 Nm (7.4 ft·lb$_f$)
Screw, hand lever M6	5 Nm (3.7 ft·lb$_f$)
Nut, starter cable on starter motor M6	4 Nm (3.0 ft·lb$_f$)
Remaining nuts on chassis M6	10 Nm (7.4 ft·lb$_f$)
Remaining screws on chassis M6	10 Nm (7.4 ft·lb$_f$)
Screw, rear brake disc M6×13	14 Nm (10.3 ft·lb$_f$) **Loctite® 243**
Screw, front brake disc M6×13	14 Nm (10.3 ft·lb$_f$) **Loctite® 243**
Screw, push rod ball joint on the rear brake cylinder M6×20	10 Nm (7.4 ft·lb$_f$) **Loctite® 243**
Screw, chain guide on swingarm, rear M6×16	10 Nm (7.4 ft·lb$_f$) **Loctite® 243**
Screw, throttle twist grip M6×20	5 Nm (3.7 ft·lb$_f$)
Screw, chain sliding guard on link fork M6×16	6 Nm (4.4 ft·lb$_f$) **Loctite® 243**
Screw, chain guide on swingarm, front M6×45	10 Nm (7.4 ft·lb$_f$)
Screw, ground wire on frame M6×13	10 Nm (7.4 ft·lb$_f$)

Screw, seat installation M6×25	8 Nm (5.9 ft·lb$_f$)
Brake line guide screw on swingarm M6×16	4.5 Nm (3.32 ft·lb$_f$) **Loctite® 243**
Screw, connector support incl. dashboard M6×15	5 Nm (3.7 ft·lb$_f$)
Screw, front sprocket cover M8×25	15 Nm (11.1 ft·lb$_f$)
Brake pedal stop nut M8	20 Nm (14.8 ft·lb$_f$)
Nut, rear sprocket screw M8	35 Nm (25.8 ft·lb$_f$) **Loctite® 2701**
Nut, rim lock M8	12 Nm (8.9 ft·lb$_f$)
Remaining nuts on chassis M8	25 Nm (18.4 ft·lb$_f$)
Remaining screws on chassis M8	25 Nm (18.4 ft·lb$_f$)
Screw, front brake caliper M8×30	25 Nm (18.4 ft·lb$_f$) **Loctite® 243**
Screw, top triple clamp M8×40	17 Nm (12.5 ft·lb$_f$)
Screw, bottom triple clamp M8×50	12 Nm (8.9 ft·lb$_f$)
Screw, fork shoe M8×25	15 Nm (11.1 ft·lb$_f$)
Screw, upper steering stem M8×25	20 Nm (14.8 ft·lb$_f$) **Loctite® 243**
Screw, handlebar clamp M8×25	20 Nm (14.8 ft·lb$_f$)
Screw, subframe, top M8×15	35 Nm (25.8 ft·lb$_f$) **Loctite® 243**
Screw, chain slider M8×20	15 Nm (11.1 ft·lb$_f$)
(XC–F) Screw, side stand attachment M8×26	33 Nm (24.3 ft·lb$_f$) **Loctite® 2701**
Screw, manifold on engine brace M8×25	15 Nm (11.1 ft·lb$_f$)
Screw, subframe, bottom M8×18	30 Nm (22.1 ft·lb$_f$) **Loctite® 2701**

Bushing, foot brake lever M10	45 Nm (33.2 ft·lb$_f$)
Engine mounting bolt M10×123	60 Nm (44.3 ft·lb$_f$)
Remaining nuts on chassis M10	45 Nm (33.2 ft·lb$_f$)
Remaining screws on chassis M10	45 Nm (33.2 ft·lb$_f$)
Top shock absorber screw M10×52	60 Nm (44.3 ft·lb$_f$) **Loctite® 2701**
Bottom shock absorber screw M10×52	60 Nm (44.3 ft·lb$_f$) **Loctite® 2701**
Screw, handlebar mount M10×50	40 Nm (29.5 ft·lb$_f$) **Loctite® 243**
Screw, sprocket M10×18	60 Nm (44.3 ft·lb$_f$) **Loctite® 2701**
Nut, frame on linkage lever M14×1.5	60 Nm (44.3 ft·lb$_f$)
Nut, linkage lever on angle lever M14×1.5	60 Nm (44.3 ft·lb$_f$)
Nut, angle lever to link fork M14×1.5	60 Nm (44.3 ft·lb$_f$)
Nut, swingarm pivot M16×1.5	100 Nm (73.8 ft·lb$_f$)
Screw, wheel spindle, front M20×1.5	35 Nm (25.8 ft·lb$_f$)
Screw, top steering head M20×1.5	12 Nm (8.9 ft·lb$_f$)
Nut, wheel spindle, rear M22×1.5	80 Nm (59.0 ft·lb$_f$)
Screw-in nozzle, cooling system M24×1.5	7.5 Nm (5.53 ft·lb$_f$)
Spoke nipple M4,5	6 Nm (4.4 ft·lb$_f$)
Screw, intake air temperature sensor **EJOT PT®** – K50×18	0.7 Nm (0.52 ft·lb$_f$)
Screw, start button/kill switch **EJOT PT®** – K50×18	2 Nm (1.5 ft·lb$_f$)
Screw, air filter box cover **EJOT PT®** – K60×20 – Z	5 Nm (3.7 ft·lb$_f$)
Screw, fuel pump on fuel tank **EJOT PT®** – K60×30 – Z	2.5 Nm (1.84 ft·lb$_f$)
Screw, air filter box, on subframe **EJOT PT®** – K60×20	5 Nm (3.7 ft·lb$_f$)

23.1 Declaration of conformity

DocuSign Envelope ID: 3F1812FB-C95E-4CB7-B48D-2C0F03A6BEDF

DECLARATION OF CONFORMITY

Kind of equipment: **Connectivity Unit for KTM vehicles**
Type-designation: **Connectivity Unit Offroad**
Type number: **A46014086010**
A46014087020

Manufacturer or
Authorised representative: KTM AG
Address: Stallhofnerstrasse 3
5230 Mattighofen, Austria

This declaration of conformity is issued under the sole responsibility of the manufacturer.

The object of the declaration described above is in conformity with the relevant statutory requirements:

- **Directive 2014/53/EU**

The product is in conformity with the following standards:

- Health and safety (Article 3. (1)(a)):

EN 62368-1:2014 / A11:2017
EN 62311:2009-09

- Radio (Article 3. (2)):

EN 300 328 V2.2.2:2019
EN 303 413 V1.2.1:2021

- EMC (Article 3. (1)(b)):

EN 301 489-1 V2.2.3:2019
EN 301 489-17 V3.2.4:2020
EN 301 489-19 V2.2.1:2022
EN 55032:2015/A11:2020
ECE R10.06

Signed for and on behalf of: KTM AG

Mattighofen, Austria
15.03.2023

DocuSigned by:
2114E1C78AF442F...

DocuSigned by:
F9A4FB06188149A...

place and date of issue

Viktor Sigl
CFO
KTM AG

Philipp Habsburg
CTO
KTM AG

23.2 Declaration of conformity (UK)

DocuSign Envelope ID: 3F1812FB-C95E-4CB7-B48D-2C0F03A6BEDF

UK DECLARATION OF CONFORMITY

Kind of equipment: **Connectivity Unit for KTM vehicles**
Type-designation: **Connectivity Unit Offroad**
Type number: **A46014086010**
A46014087020

Manufacturer or
Authorised representative: KTM AG
Address: Stallhofnerstrasse 3
5230 Mattighofen, Austria

This declaration of conformity is issued under the sole responsibility of the manufacturer.

The object of the declaration described above is in conformity with the relevant statutory requirements:

- **Radio Equipment Regulations 2017 (S.I. 2017/1206)**

The product is in conformity with the following standards:

- Health and safety (Regulation 6.(1)(a)):

EN 62368-1:2014 / A11:2017
EN 62311:2009-09

- Radio (Regulation 6. (2)):

EN 300 328 V2.2.2:2019-07
EN 303 413 V1.2.1:2021/04

- EMC (Regulation 6.(1)(b)):

EN 301 489-1 V2.2.3:2019
EN 301 489-17 V3.2.4:2020
EN 301 489-19 V2.2.1:2022
EN 55032:2015/A11:2020
ECE R10.06

Signed for and on behalf of: KTM AG

Mattighofen, Austria
15.03.2023

DocuSigned by:
2114E1C78AF442F...

DocuSigned by:
F9A4FB06188149A...

place and date of issue	Viktor Sigl CFO KTM AG	Philipp Habsburg CTO KTM AG

24.1 Recycling

I02045-10

Further information is available at the following website.
Recycling information website: https://www.quefairedemesdechets.fr

A Technical terms

	Launch control	Vehicles electronics functions for achieving the best possible acceleration from a standing position
OBD	On-board diagnosis	Vehicle system that monitors the specified parameters of the vehicle electronics.
	Quickshifter	Function of the engine electronics for shifting up without clutch actuation

B Fuels

Super unleaded

Standards	
• ROZ 95	→ DIN EN 228

Super unleaded, type C

Standards	
• ROZ 95/RON 95/PON 91	→ ANP (Agência Nacional do Petróleo) #57

Fuel additive

Recommended supplier
MOTOREX®
• **FUEL STABILIZER**

C Operating supplies

Off-road chain spray

Recommended supplier

MOTOREX®

- **CHAINLUBE OFF ROAD**

Fork oil

Order details

- 48601166S1

Standards

- SAE 4 → SAE

Universal oil spray

Recommended supplier

MOTOREX®

- **JOKER 440 SYNTHETIC**

Long-life grease

Recommended supplier

MOTOREX®

- **Bike Grease 2000**

Engine oil

Recommended supplier

MOTOREX®

- **CROSS POWER 4T**

Standards

→ JASO T903 MA2

- 10W/50 → SAE

Properties

- fully synthetic

High viscosity grease

Recommended supplier

SKF®

- **LGHB 2**

Silicone spray

Recommended supplier

MOTOREX®
- **SILICONE SPRAY**

Special grease

Order details

- 00062010053

Recommended supplier

Klüber Lubrication®
- **Klüberfood NH1 34–401**

Shock absorber oil

Order details

- 50180751S1

Standards

• SAE 2.5	→ SAE

Oil for foam air filter

Recommended supplier

MOTOREX®
- **RACING BIO AIR FILTER OIL**

Brake fluid DOT 5.1

Recommended supplier

MOTOREX®
- **BRAKE FLUID DOT 5.1**

Standards

→ DOT

Coolant

Recommended supplier

MOTOREX®
- **COOLANT M3.0**

Properties

• Antifreeze protection to at least	−25 °C (−13.0 °F)

D Electrics

12-V battery (HJTZ5S-FP-C)

Product code	
• HJTZ5S-FP-C	
Properties	
• Lithium-ion battery	
• Battery voltage	12 V
• Nominal capacity	2.0 Ah
• Maintenance-free	

Dashboard illumination and indicator lights (LED)

Product code
• LED

Fuse (58011109110)

Product code
• 58011109110
Properties
• 10 A

Fuse (58011109105)

Product code
• 58011109105
Properties
• 5 A

E Cleaning agents

Chain cleaner

Recommended supplier

MOTOREX®

- **CHAIN CLEAN**

Preserving materials

Recommended supplier

MOTOREX®

- **MOTO PROTECT**

Air filter cleaning agent

Recommended supplier

MOTOREX®

- **RACING BIO AIR FILTER CLEANER**

Cleaning agents for plastics, glass, lacquers, metals, windshields and visors

Recommended supplier

MOTOREX®

- **QUICK CLEANER**

Environmentally neutral universal cleaning agent

Recommended supplier

MOTOREX®

- **MOTO CLEAN UNIVERSAL**

F Icons

F.1 List of symbols

F.1.1 Yellow and orange symbols

Yellow and orange symbols indicate a malfunction status that requires prompt intervention. Active driving aids are also represented by yellow or orange symbols.

Fi	Failure indicator lamp lights up or flashes red
TC	TC indicator light lights up/flashes orange

F.1.2 Green and blue symbols

Green and blue symbols convey information.

	Indicator light B lights up green
QS	QS indicator light lights up/flashes blue

F.1.3 White symbols

White symbols convey information.

	Indicator light A lights up white

1

12 V battery
charging 118
removing 116

12 V battery
installation 117
starting power 30

A

Accessories 14

Air filter
cleaning 81
installing 82
removing 80

Air filter box
cleaning 81

Air filter box cover
installing 79
preparing for securing 82
removing 78

Air suspension XACT 45

Auxiliary substances 14

B

Brake discs
checking 98

Brake fluid
adding front brake 100
adding to rear brake 106

Brake fluid level
checking on front brake 99
checking on rear brake 105

Brake lining retainers
checking on front brake 101
checking on rear brake 107

Brake linings (brake pads)
changing on the rear brake 107

Brake pad
checking on front brake 101

Brake pads
checking on rear brake 107
of the front brake, changing 102

Brake pedal 26
adjusting the basic position 104
checking the free travel 104

C

Chain
checking 90
cleaning 88

Chain guide
checking 90

Chain tension
adjusting 89
checking 89

Characteristic map of the throttle response
adjusting 130

Checking basic chassis setting with
rider's weight 45

Clothing 11

Clutch
changing fluid 96
checking/correcting fluid level 95

Clutch lever 19
adjusting the basic position 95

Cold start button 25

Compression damping
adjusting the fork 55

Coolant
antifreeze and coolant level, checking 124
draining 126
level, checking 125
refilling 126

Cooling system 124

Customer service 14

D

Dashboard 23

Defined use 12

Diagnostic connector 123

Difficult operating conditions 30
dry sand 30
high temperatures 32
low temperature 32
muddy surfaces 32
slow speed 32
snow 32
wet sand 31
wet surfaces 32

E

Electric starter 21

Engine
running in 29

Engine number 17

Engine oil
adding 140
changing 138

Engine oil level
checking 137
Engine sprocket
checking 90
Environment 12

F

Figures 14
Fork legs
adjusting the air pressure 54
adjusting the rebound damping 56
bleeding 62
checking basic setting 54
cleaning the dust boots 63
compression damping, adjusting 55
installing 66
removing 66
Fork protector
installation 64
removing 63
Frame
checking 93
Frame protector
installation 65
removing 65
Front fender
installation 74
removing 73
Front wheel
installing 111
removing 110
Frost protection
checking 124
Fuel screen
changing 136
Fuel tank
installation 86
removing 84
Fuel tank cap
closing 24
opening 23
Fuse
changing the main fuse 121
of the fuel pump, changing 122

G

Gear shift lever 26
adjusting the basic position 134
checking the basic position 134

H

Hand brake lever 19
adjusting the basic position 98
Handbrake lever
checking the free travel 98
Handlebar position 58
adjusting 58
High-speed compression damping
adjusting the shock absorber 47

I

idle speed
adjusting 132
Idle speed adjustment screw 25
Implied warranty 14
Improper use 13
Intended use 12

K

Kill button 20

L

Launch control
activating 34
Lithium-ion battery
starting power 30
Lower triple clamp
installation 68
removing 67
Low-speed compression damping
adjusting the shock absorber 46

M

Main fuse
changing 121
Main silencer
changing damping material 84
installation 83
Manufacturer's warranty 14
Mapping
changing 132
Motorcycle
cleaning 142
raising with lift stand 61
removing from lift stand 61
Muffler
removing 83

N

Number plate
installation 73
removing 73

O

Oil filter
changing 138

Oil screen
cleaning 138

Owner's manual 12

P

Plug-in stand 27

Preparing for use
after storage 145
checks and maintenance measures when preparing for use 33
notes on preparing for first use 28

Protective clothing 11

Q

Quickshifter 36
activating 36
programming 95

R

Rear sprocket
checking 90

Rear wheel
installation 112
removing 111

Rebound damping
adjusting the fork 56
adjusting the shock absorber 48

Recycling 171

Refueling
fuel 40

Resources 14

Rider sag
adjusting 52

Rubber grips
checking 94

S

Safe use 11

Seat
mounting 78
removing 77

Service 14

Shock absorber
adjusting the high-speed compression damping 47
adjusting the low-speed compression damping 46
adjusting the rebound damping 48
adjusting the spring preload 51
checking static sag 50
checking the rider sag 50
compression damping, general 46
installation 76
removing 74

Side stand 27

Skid plate
installation 65
removing 64

spare parts 14

Spoke tension
checking 115

Starting 33

starting power
lithium-ion batteries at low temperatures 30

Steering head bearing
lubricating 72

Steering head bearing play
adjusting 72
checking 71

Storage 144

Swingarm
checking 93

T

Tampering 10

Throttle cable play
adjusting 129
checking 129

Throttle cable routing
checking 93

Throttle twist grip 20

Throttle valve position
programming 133

Tire condition
checking 113

Tire pressure
checking 114

Traction control
activating 35

Transportation 39

V

View of the vehicle
front left 15
rear right 16

W

Work rules 11

3240381en

20/07/2026

KTM Sportmotorcycle GmbH
5230 Mattighofen/Austria
https://www.ktm.com