OWNER'S MANUAL 2027

READY TO RACE

250 SX
250 XC
300 SX
300 XC

ITEM NO.: 3240380EN

KTM

Dear KTM customer,

Congratulations on your decision to purchase a KTM motorcycle. You are now the owner of a state-of-the-art sports vehicle which, with proper care, will bring you pleasure for a long time to come.

We hope you enjoy your bike and have a safe journey at all times!

You can enter the serial numbers of your vehicle below to find the serial numbers more quickly if required:

Vehicle identification number (p. 17)	Stamp of the contractual partner
Engine number (p. 17)	

The owner's manual contained the latest information for this model series at the time of publication. However, minor differences due to further developments in design cannot be ruled out completely.

All specifications are non-binding. KTM Sportmotorcycle GmbH specifically reserves the right to modify or delete technical specifications, prices, colors, forms, materials, services, designs, equipment, etc., without prior notice and without specifying reasons, to adapt these to local conditions, as well as to stop production of a particular model without prior notice. KTM Sportmotorcycle accepts no liability for delivery options, deviations from figures and descriptions, as well as misprints and other errors. The models portrayed partly contain special equipment that does not belong to the regular scope of supply.

© 2026 KTM Sportmotorcycle GmbH, Mattighofen Austria
All rights reserved. Figures: Visus Studios/INDG/KTM
Written permission from the copyright owner is required before any duplication or reproduction.

ISO 9001

KTM applies quality assurance processes that lead to the highest possible product quality as defined in the ISO 9001 international quality management standard.

12 100 6061

REG.NO. 12 100 6061

Issuing institution:
TÜV SÜD Management Service GmbH

KTM Sportmotorcycle GmbH
Stallhofnerstraße 3
5230 Mattighofen, Austria

This document is valid for:

250 SX (F6301027)

250 XC US (F6375527)

300 SX (F6401127)

300 XC US (F6475527)

3240380en

21/08/2026

Table of contents

1 Means of representation 9

1.1 Conventions..... 9
1.1.1 Icons 9
1.1.2 Formatting 9
1.1.3 Abbreviations 9

2 Safety 10

2.1 Safety instructions 10
2.2 Ban on tampering 10
2.3 Safe use 11
2.4 Protective clothing 11
2.5 Work rules 11
2.6 Environment 12
2.7 Owner's manual 12
2.8 Defined use – intended use 12
2.9 Improper use 13

3 Important notes 14

3.1 Manufacturer's warranty, implied warranty 14
3.2 Auxiliary material, operating material 14
3.3 Spare parts, accessories 14
3.4 Service 14
3.5 Figures 14
3.6 Customer service 14

4 View of the vehicle 15

4.1 View of vehicle, left side (example) 15
4.2 View of vehicle, right side (example) 15

5 Serial number 17

5.1 Vehicle identification number 17
5.2 Frame label 17
5.3 Engine number 17
5.4 Fork part number 17
5.5 Shock absorber part number 18

6 Controls 19

6.1 Clutch lever 19
6.2 Handbrake lever 19
6.3 Throttle grip 20
6.4 Kill button 20
6.5 Electric starter 21
6.6 Combination switch 21
6.7 Overview of indicator lights **(All SX models)** 21
6.8 Overview of indicator lights **(All XC models)** 22
6.9 Combination instrument 22
6.10 Opening the fuel tank cap 23
6.11 Closing the fuel tank cap 24
6.12 Cold start button 24
6.13 Idle speed adjustment screw 25
6.14 Gear shift lever 25
6.15 Brake pedal 26
6.16 Plug-in stand **(All SX models)**..... 26
6.17 Side stand **(All XC models)**..... 26

7 Preparing for use 27

7.1 Notes on preparing for first use 27
7.2 Running in the engine 28
7.3 Starting performance of lithium-ion batteries at low temperatures 29
7.4 Preparing the vehicle for difficult operating conditions 29
7.5 Preparing the vehicle for rides on dry sand 30
7.6 Preparing the vehicle for rides on wet sand 30
7.7 Preparing for rides on wet and muddy surfaces 31
7.8 Preparing vehicle for rides at high temperature or slow speed 31
7.9 Preparing the vehicle for low temperatures or snow 32

8 Riding instructions 33

8.1 Checks and maintenance measures when preparing for use 33
8.2 Starting the vehicle 33
8.3 Starting off 34
8.4 Shifting, riding. 35
8.5 Braking 35
8.6 Stop, park 36
8.7 Transportation 36
8.8 Refueling 37

9 Service schedule 39

9.1 Service schedule 39

10 Tuning the chassis 42

10.1 Checking the basic chassis setting with the rider's weight 42
10.2 Compression damping of the shock absorber 42
10.3 Adjusting the low-speed compression damping of the shock absorber 42
10.4 Adjusting the high-speed compression damping of the shock absorber 43
10.5 Adjusting the rebound damping of the shock absorber 44
10.6 Measuring the dimension of the unloaded rear wheel 45

10.7 Checking the static sag of the shock absorber 46
10.8 Checking the rider sag of the shock absorber 46
10.9 Adjusting the preload for the shock absorber 47
10.10 Adjusting the rider sag 48
10.11 Air suspension **XACT** 49
10.12 Checking the basic setting of the fork 49
10.13 Adjusting the fork air pressure **(All SX models)** 50
10.14 Adjusting the compression damping of the fork 51
10.15 Adjusting the rebound damping of the fork 52
10.16 Handlebar position 53
10.17 Adjusting the handlebar position 53

11 Service work on the chassis 56

11.1 Raising the motorcycle with a lift stand 56
11.2 Removing the motorcycle from the lift stand 56
11.3 Bleeding the fork legs 57
11.4 Cleaning the dust boots of the fork legs 57
11.5 Removing the fork protector 58
11.6 Installing the fork protector 58
11.7 Removing the skid plate **(All XC models)** 59
11.8 Installing the skid plate **(All XC models)** 59
11.9 Removing the frame protector 60
11.10 Installing the frame protector 60
11.11 Removing the fork legs 60
11.12 Installing the fork legs 61
11.13 Removing the lower triple clamp 62
11.14 Installing the lower triple clamp 63
11.15 Checking the steering head bearing play 65
11.16 Adjusting the steering head bearing play 66
11.17 Lubricating the steering head bearing 67
11.18 Removing the number plate 67
11.19 Mounting the number plate 67
11.20 Removing the front top fender 68
11.21 Installing the front top fender 68
11.22 Removing the shock absorber 69
11.23 Installing the shock absorber 70
11.24 Removing the seat 71
11.25 Mounting the seat 72
11.26 Removing air filter box cover 73
11.27 Installing air filter box cover 73
11.28 Removing the air filter 75
11.29 Cleaning the air filter and air filter box 75
11.30 Installing the air filter 76
11.31 Preparing the air filter box cover for securing 77
11.32 Removing the muffler 77
11.33 Installing muffler 77
11.34 Changing the damping material on the main silencer 78
11.35 Removing the fuel tank 78
11.36 Installing the fuel tank 80
11.37 Checking the chain for dirt 82
11.38 Cleaning the chain 82
11.39 Checking the chain tension 83
11.40 Adjusting the chain tension 83
11.41 Checking the chain, rear sprocket, front sprocket, and chain guide 84
11.42 Checking the frame 87
11.43 Checking the swingarm 87
11.44 Checking the throttle cable routing 87
11.45 Checking the hand grip 88
11.46 Adjusting the basic position of the clutch lever 89
11.47 Checking/correcting the fluid level of hydraulic clutch 89
11.48 Changing the hydraulic clutch fluid 90

12 Brake system 92

12.1 Checking the free travel on the hand brake lever 92
12.2 Adjusting the basic position of the hand brake lever 92
12.3 Checking the brake discs 92
12.4 Checking the brake fluid level for the front brake 93
12.5 Adding brake fluid for the front brake 94
12.6 Checking that the brake pads of the front brake are secured 95
12.7 Changing the brake pads of the front brake 96
12.8 Checking the free travel of the brake pedal 98

12.9 Adjusting the basic position of the brake pedal 98
12.10 Checking the brake fluid level for the rear brake 99
12.11 Adding brake fluid for the rear brake 100
12.12 Checking that the brake pads of the rear brake are secured 101
12.13 Changing the rear brake pads 101

13 Wheels, tires 104

13.1 Removing the front wheel 104
13.2 Installing the front wheel 105
13.3 Removing the rear wheel 105
13.4 Installing the rear wheel 106
13.5 Checking the tire condition 107
13.6 Checking the tire pressure 108
13.7 Checking the spoke tension 109

14 Electrics 110

14.1 Removing the 12 V battery 110
14.2 Installing the 12 V battery 111
14.3 Charging the 12 V battery 112
14.4 Changing the main fuse 114
14.5 Changing the fuse of the fuel pump 115
14.6 Diagnostic connector 116

15 Cooling system 117

15.1 Cooling system 117
15.2 Checking the frost protection and coolant level 117
15.3 Checking the coolant level 118
15.4 Draining the coolant 119
15.5 Refilling the coolant 119
15.6 Changing the coolant 121

16 Exhaust control 124

16.1 Programming the end positions of the exhaust control 124

17 Tuning the engine 126

17.1 Changing the mapping 126
17.2 Checking the play in the throttle cable 126
17.3 Adjusting the throttle cable play 127
17.4 adjusting the idle speed 128
17.5 Checking the basic position of the gear shift lever 128
17.6 Adjusting the basic position of the gear shift lever 129

18 Service work on the engine 130

18.1 Changing the fuel screen 130
18.2 Checking the gear oil level 131
18.3 Changing the gear oil 132
18.4 Adding gear oil 133

19 Cleaning, care 135

19.1 Cleaning the motorcycle 135

20 Storage 137

20.1 Storage 137
20.2 Preparing for use after storage 138

21 Troubleshooting 139

21.1 troubleshooting 139

22 Flash code 141

22.1 Flash codes 141

23 Technical specifications 144

23.1 Engine 144
23.1.1 Technical data - engine 144
23.2 Chassis 145
23.2.1 Technical data - chassis 145
23.2.2 Technical data - tires 146
23.2.3 Capacities - vehicle 147
23.3 Electrics 147
23.3.1 Battery 147
23.3.2 Fuses 147
23.4 Fork 147
23.4.1 Technical data - fork **(All SX models)** 147
23.4.2 Capacities - fork **(All SX models)** 148
23.4.3 Technical data - fork **(All XC models)** 148
23.4.4 Capacities - fork **(All XC models)** 149
23.5 Shock absorber 149
23.5.1 Technical data - shock absorber **(All SX models)** 149
23.5.2 Technical data - shock absorber **(All XC models)** 150
23.6 Tightening torque 151
23.6.1 Engine tightening torques 151
23.6.2 Chassis tightening torques 153

24 Recycling 157

24.1 Recycling 157

Notes 159

A Technical terms 159

B Fuels..... 160

C Operating supplies..... 161

D Cleaning agents..... 164

E Icons..... 165

E.1 Symbol colors 165
E.1.1 Yellow and orange symbols 165
E.1.2 Green and white symbols..... 165

Index 166

1.1 Conventions

1.1.1 Icons

✓	Indicates a desired result (e.g. of a work step or a function).
✗	Indicates an undesired result (e.g. of a work step or a function).
	All work marked with this symbol requires specialist knowledge and technical understanding. Ensure that this work is carried out or supervised by trained personnel from an authorized contractual partner, and that any special tools required are used.
	Indicates a page reference.
	Indicates information with more details.
	Indicates a tip, e.g. to simplify work.
»	Indicates the result from a test step.
◀	Indicates the end of an activity, including any rework.

1.1.2 Formatting

Proprietary name	Indicates a proprietary name.
Name ®	Indicates a protected name.
Brand ™	Indicates a brand available on the open market.
Underlined terms	Refer to technical details of the vehicle or indicate technical terms that are explained in the glossary.

1.1.3 Abbreviations

2–pc.	two-part
Part no.	Part number
or	respectively
approx.	circa
etc.	et cetera
poss.	possibly/possible
if necessary	if necessary
cmpl.	complete
min.	at least
no.	number
no fig.	no figure
s.	see
among others	among others/not limited to
and the like	and the like
etc.	et cetera
cf.	compare
e.g.	for example

2.1 Safety instructions

Function of the safety instruction

Safety instruction brings attention to dangers when handling the product. Hazards are classified, named, described, and supplemented with information on how to avoid them.

- If there is a safety instruction before a list of instructions, the danger exists throughout the entire activity.
- If there is a safety instruction immediately before an instruction, the next step presents a danger.

Safety instruction layout

All safety instructions are identified by a signal word and a warning symbol. The combination of signal word and warning symbol determines the degree of danger.

DANGER
Indicates an imminent danger that leads to serious injury or death.

WARNING
Indicates a potentially imminent danger that could lead to serious injury or death.

CAUTION
Indicates a potentially imminent danger that can lead to minor or slight injuries.

NOTE
Indicates a situation that can lead to damage to the product or the product environment.

NOTE
Indicates a situation that can lead to environmental damage.

2.2 Ban on tampering

No changes may be made to the noise control equipment and components.

Tampering that is prohibited

- Removing or disabling any devices or components used for noise control before the new vehicle is sold or delivered to the end customer.
- Removing or disabling any device or component used for noise control for purposes other than service, repair, or replacement during the service life of the vehicle.
- Use of the vehicle after a device or component used for noise control has been removed, disabled, or inadequately maintained.

Examples of prohibited tampering

- Removing or drilling through rear mufflers, baffle plates, manifolds, or other components that conduct exhaust gases.
- Removing or puncturing parts of the intake system.
- Replacing moving parts of the vehicle, or parts of the exhaust system or intake system, with parts other than those specified by the manufacturer.

2.3 Safe use

DANGER

Danger of accidents A rider who is not fit to ride poses a danger to themself and to others.

- Do not operate the vehicle if you are not fit to ride due to alcohol, drugs, or medication.
- Do not operate the vehicle if you are physically or mentally incapable of doing so.

DANGER

Danger of poisoning Exhaust gases are toxic and inhaling them may result in unconsciousness and death.

- Always ensure that there is sufficient ventilation when running the engine.
- Use suitable exhaust extraction when starting or running the engine in an enclosed space.

WARNING

Danger of burns Some vehicle components become hot when the vehicle is operated.

- Do not touch any parts such as the exhaust system, radiator, engine, damper, or brake system before the vehicle parts have cooled down.
- Allow the vehicle parts to cool down before performing any work on the vehicle.

The vehicle should only be used when it is in perfect technical condition, for its intended purpose, and in a safe and environmentally-friendly manner.

The vehicle must only be used by trained persons.

Have any faults that impair safety immediately remedied by an authorized contractual partner.

Adhere to the information and warning labels on the vehicle.

2.4 Protective clothing

WARNING

Risk of injury Missing or inadequate protective clothing increases the risk of injury.

- Wear appropriate protective clothing such as helmet, boots, gloves as well as pants and a jacket with protectors on all rides.
- Always wear protective clothing that is in good condition and meets the legal regulations.

2.5 Work rules

Unless specified otherwise, the ignition must be switched off during all work (models with ignition lock, models with transponder key) or the engine must be at a standstill (models without ignition lock or transponder key).

Special tools are required for some work. The tools are not part of the vehicle, but can be ordered using the number in parentheses. Example: bearing puller (15112017000)

Unless otherwise noted, normal conditions apply to all tasks and descriptions.

Ambient temperature	20 °C (68.0 °F)
Ambient air pressure	1,013 mbar (14.69 psi)
Relative air humidity	60 ±5 %

During assembly, use new parts to replace parts which cannot be reused (e.g. self-locking screws and nuts, expansion screws, seals, sealing rings, O-rings, pins, and lock washers).

A thread lock (e.g. **Loctite®**) is required for some screw connections. Observe the manufacturer's specific instructions for use.

If thread lock (e.g. **Precote®**) has already been applied to a new part, do not apply any additional thread lock.

After disassembly, clean the parts that are to be reused and check them for damage and wear. Replace damaged or worn parts.

After completing a repair or service, check the operating safety of the vehicle.

2.6 Environment

Handling the vehicle responsibly reduces the risk of conflict with other road users and the surrounding area. The future of motorcycling also depends on using motorcycles legally, being environmentally conscious and respecting the rights of others.

When disposing of used oil, other operating and auxiliary fluids, and used components, the laws and regulations of the respective country must be observed.

As motorcycles are not subject to the EU regulations governing the disposal of end-of-life vehicles, there are no legal regulations that pertain to the disposal of an end-of-life motorcycle. More information is available from the authorized contractual partner.

2.7 Owner's manual

Read this owner's manual carefully and in full before riding off for the first time. The owner's manual contains information and tips on how to operate, handle, and service your vehicle, as well as advice on optimum tuning and how to avoid injuries.

Tip
Save this owner's manual on your smartphone, for example, so that you can access it at any time.

An authorized contractual partner will be happy to assist you if you are unsure.

The owner's manual is an important component of the vehicle. If the vehicle is sold, the owner's manual must be downloaded again by the new owner.

The owner's manual can be downloaded multiple times using the QR code or the link on the delivery certificate.

The owner's manual is also available for download from your authorized contractual partner and on the KTM website.

International KTM Website: https://www.ktm.com

A printed copy can be ordered from the following address.

Website for printed copy: https://print.ktm.com

2.8 Defined use – intended use

(All SX models)

This vehicle has been designed and built to withstand the typical stresses and strains of racing. This vehicle complies with the currently valid regulations and categories of the top international motorsports organizations.

Note
Only use this vehicle on designated tracks away from public roads.

(All XC models)

This vehicle has been designed and built to withstand the typical stresses and strains of racing. This vehicle complies with the currently valid regulations and categories of the top international motorsports organizations.

Note
This vehicle is designed for use in offroad endurance competition, and not primarily for use in motocross.
Only use this vehicle on designated tracks away from public roads.

2.9 Improper use

The vehicle may only be used as intended.

Improper use can result in danger to people, property and the environment.

Any use of the vehicle beyond the intended and defined use constitutes misuse.

Improper use includes the use of operating and auxiliary materials that do not meet the required specifications for the respective use.

3 Important notes

3.1 Manufacturer's warranty, implied warranty

The work prescribed in the service schedule must only be carried out by an authorized contractual partner and then confirmed in the electronic proof of service, as otherwise all warranty claims will be void. Damage or secondary damage caused by tampering with and/or conversions on the vehicle are not covered by the manufacturer's warranty.

3.2 Auxiliary material, operating material

Use operating materials and auxiliary materials in accordance with the operating instructions and specifications.

3.3 Spare parts, accessories

For safety reasons, only spare parts and accessories approved by KTM may be used. They may only be installed by an authorized contractual partner. KTM accepts no liability for other products and any resulting damage or loss.

Certain spare parts and accessory products are specified in parentheses in the descriptions. Authorized contractual partners will be happy to help.

The current **KTM PowerParts** are listed for each vehicle on the KTM website.

International KTM Website: https://www.ktm.com

3.4 Service

A prerequisite for perfect operation and prevention of premature wear is that the service, care, and tuning work on the engine and chassis is properly carried out as described in the owner's manual. An incorrect suspension setting can lead to damage and breakage of chassis components.

Use of the vehicle under arduous conditions, such as on sand or on wet, dusty and muddy surfaces, can result in significantly increased wear of components, such as the powertrain, brake system, air filter, or suspension components. For this reason, it may be necessary to inspect or replace parts before the next scheduled service interval.

Please adhere to the prescribed run-in times and service intervals at all times. Strictly adhering to this will ensure a much longer service life for your motorcycle.

The relevant mileage or time interval is whichever occurs first.

A list of services that have already been carried out on the vehicle can be found in the Service area on the international KTM website:

International KTM Website: https://www.ktm.com

Authorized contractual partners will be happy to answer any questions regarding the services performed.

A list of authorized contractual partners can be found on the KTM website.

3.5 Figures

Some of the figures in this document contain optional extras.

For clarity, some components may be shown disassembled or may not be shown at all. Disassembly is not always absolutely necessary in order to carry out the activities described. The textual information takes precedence.

3.6 Customer service

Authorized contractual partners will be happy to answer questions about the vehicle and KTM.

A list of authorized contractual partners can be found on the KTM website.

International KTM Website: https://www.ktm.com

4.1 View of vehicle, left side (example)

Note
Arrow faces in the direction of forward travel.

1. Clutch lever (p. 19)
2. Combination switch (p. 21)
3. Air filter box cover
4. Gear shift lever (p. 25)

4.2 View of vehicle, right side (example)

Note
Arrow faces in the direction of forward travel.

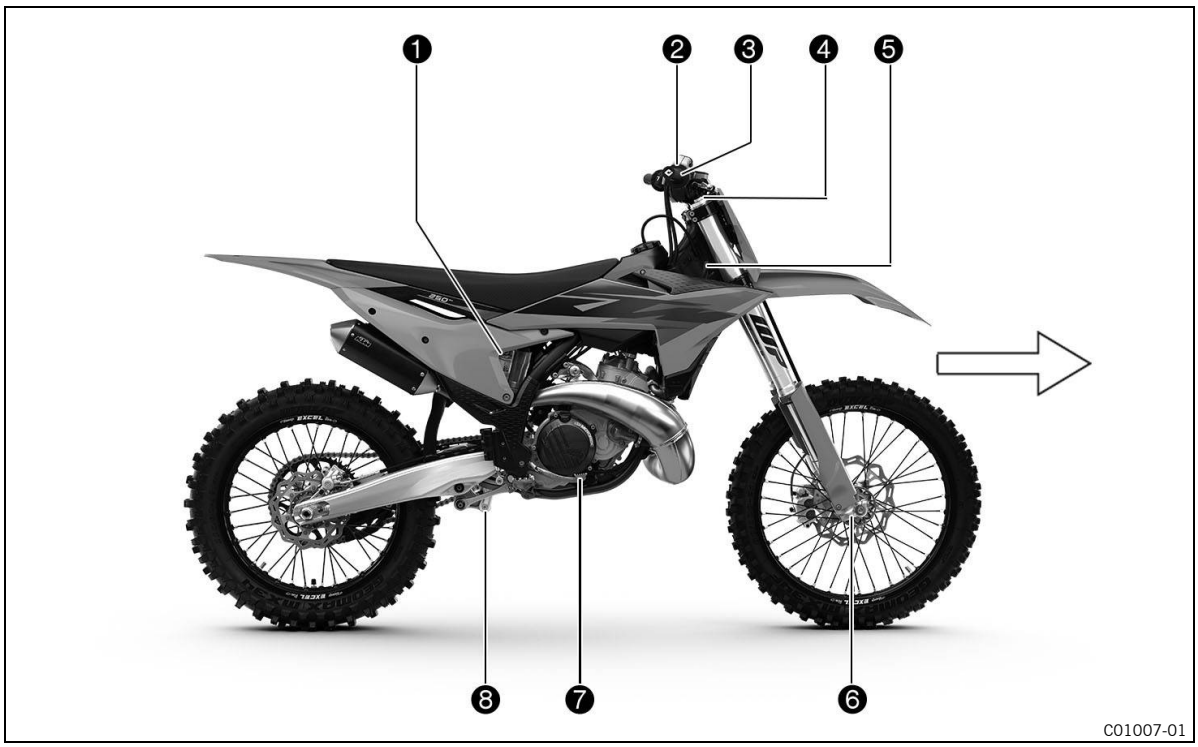

1. Shock absorber compression adjustment
2. Kill button (p. 20)
2. Electric starter (p. 21)
3. Throttle grip (p. 20)
4. Fork compression adjustment
5. Vehicle identification number (p. 17)
6. Fork rebound adjustment
7. Brake pedal (p. 26)
8. Shock absorber rebound adjustment

5.1 Vehicle identification number

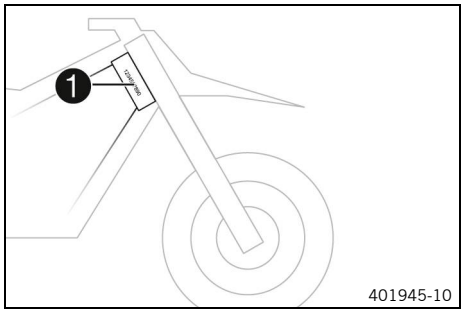

The vehicle identification number ❶ is stamped on the right-hand side of the steering head.

5.2 Frame label

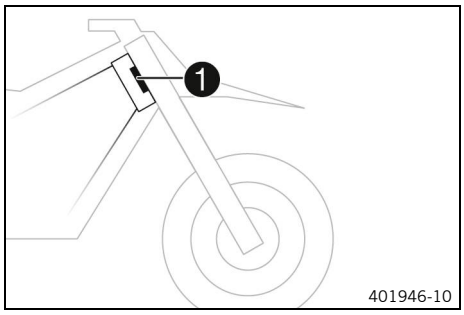

The frame label ❶ is attached to the front of the steering head.

5.3 Engine number

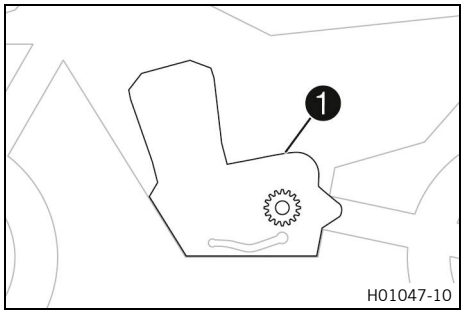

The engine number ❶ is located on the left side of the engine under the engine sprocket.

5.4 Fork part number

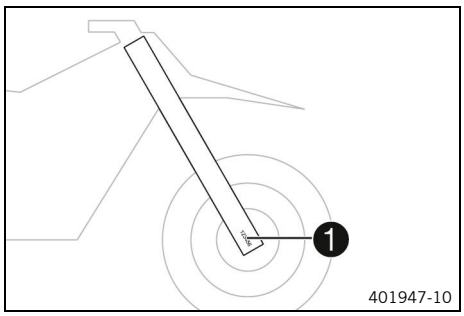

Fork part number ❶ is stamped on the inside of the fork shoe.

5.5 Shock absorber part number

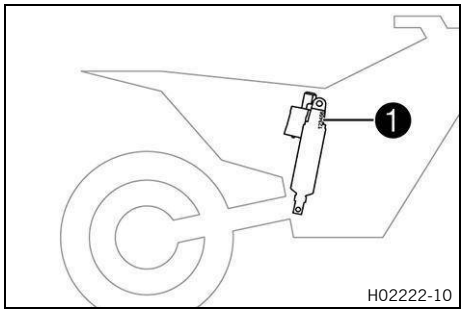

Shock absorber part number ❶ is stamped on the top right of the shock absorber.

6.1 Clutch lever

(All SX models)

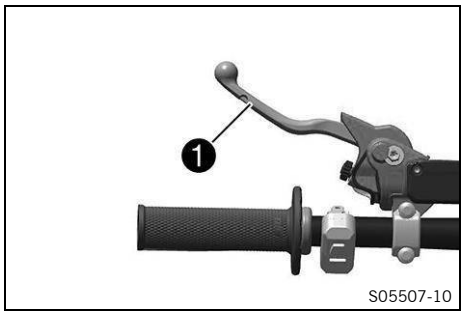

Clutch lever ❶ is fitted on the left side of the handlebar.
The clutch is activated hydraulically and adjusts itself automatically.

(All XC models)

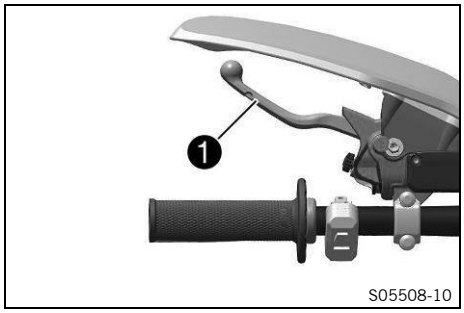

Clutch lever ❶ is fitted on the left side of the handlebar.
The clutch is activated hydraulically and adjusts itself automatically.

6.2 Handbrake lever

(All SX models)

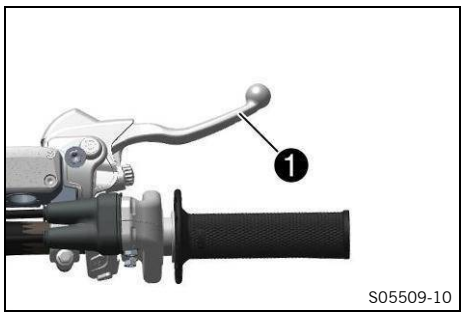

Hand brake lever ❶ is fitted on the right side of the handlebar.
The front brake is engaged using the hand brake lever.

(All XC models)

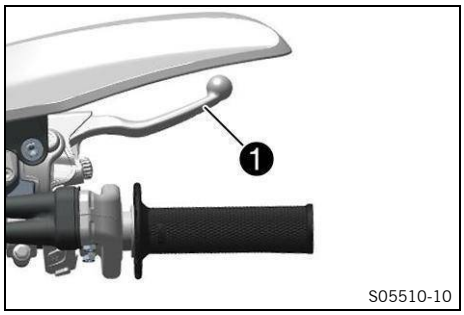

Hand brake lever ❶ is fitted on the right side of the handlebar.
The front brake is engaged using the hand brake lever.

6.3 Throttle grip

(All SX models)

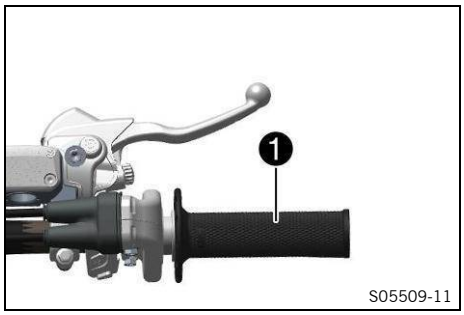

The throttle twist grip ❶ is fitted on the right side of the handlebar.

(All XC models)

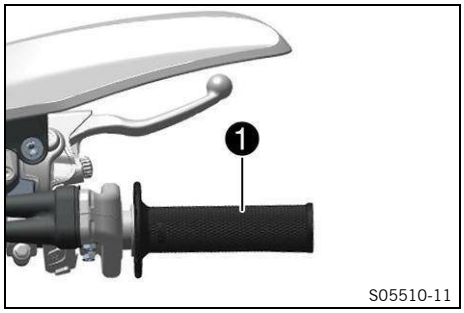

The throttle twist grip ❶ is fitted on the right side of the handlebar.

6.4 Kill button

(All SX models)

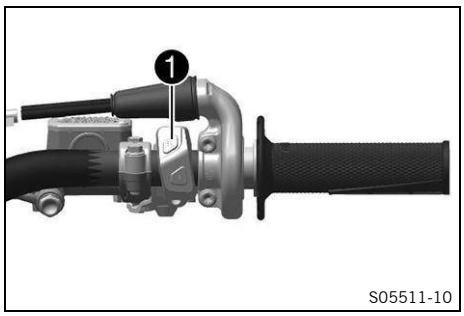

Kill switch ❶ is fitted on the right side of the handlebar.

Condition	Meaning
Kill button ⊗ is not pressed.	In this position, the ignition circuit is closed, and the engine can be started.
The kill button ⊗ is pressed and held.	In this position, the ignition circuit is interrupted, a running engine stops, and an engine at standstill will not start.

(All XC models)

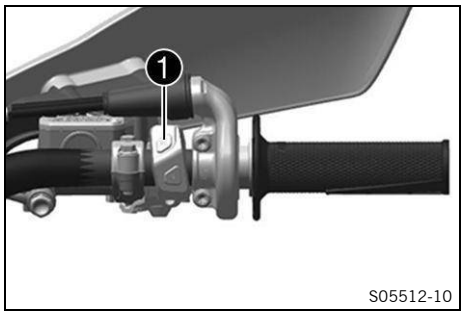

Kill switch ❶ is fitted on the right side of the handlebar.

Condition	Meaning
Kill button ⊗ is not pressed.	In this position, the ignition circuit is closed, and the engine can be started.
The kill button ⊗ is pressed and held.	In this position, the ignition circuit is interrupted, a running engine stops, and an engine at standstill will not start.

6.5 Electric starter

(All SX models)

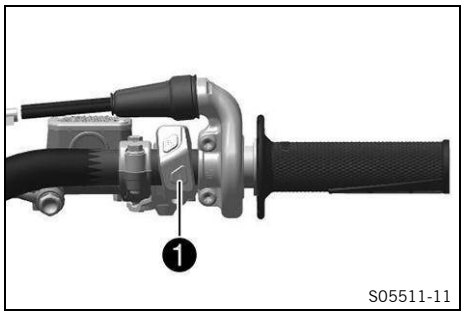

Electric starter ❶ is fitted on the right side of the handlebar.

Condition	Meaning
Electric starter in the basic position	No function
Electric starter pressed	In this position, the starter motor is actuated.

(All XC models)

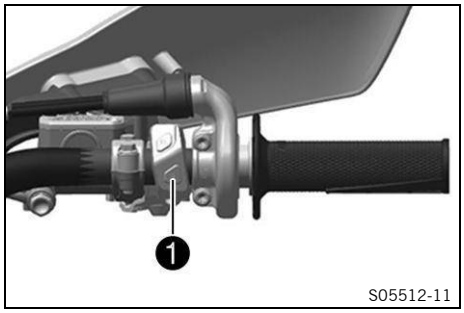

Electric starter ❶ is fitted on the right side of the handlebar.

Condition	Meaning
Electric starter in the basic position	No function
Electric starter pressed	In this position, the starter motor is actuated.

6.6 Combination switch

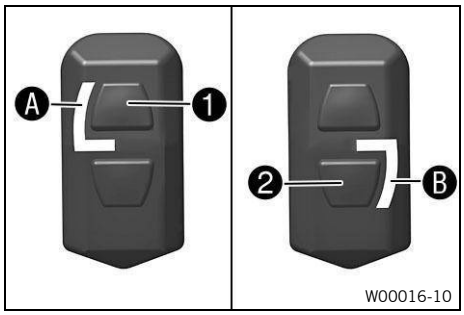

The combination switch is fitted on the left side of the handlebar.

The engine characteristic can be changed using button ❶ and button ❷ on the combination switch.

Condition	Meaning
STANDARD	STANDARD mapping is activated when the indicator light Ⓐ illuminates.
ADVANCED	ADVANCED mapping is activated when the indicator light Ⓑ illuminates.

6.7 Overview of indicator lights (All SX models)

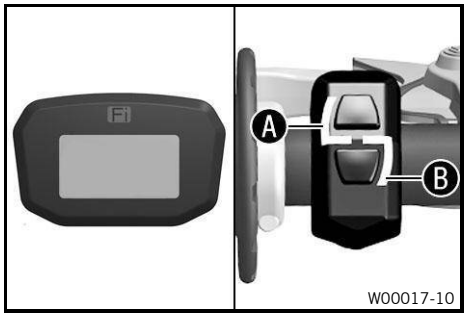

Condition		Meaning
Fi	Failure indicator lamp lights up or flashes red	The **OBD** has detected a malfunction in the vehicle electronics. Come safely to a halt, and contact an authorized dealer.
L	Indicator light Ⓐ lights up white	Lean mapping is activated. This mapping is recommended for firm/hard surfaces.
7	Indicator light Ⓑ lights up green	Rich mapping is activated. This mapping is recommended for sandy/loose surfaces.

6.8 Overview of indicator lights (All XC models)

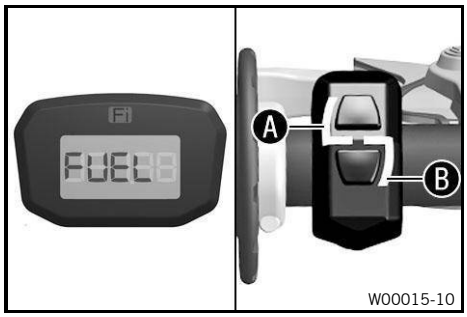

Condition		Meaning
Fi	Failure indicator lamp lights up or flashes red	The **OBD** has detected a malfunction in the vehicle electronics. Come safely to a halt, and contact an authorized dealer.
L	Indicator light Ⓐ lights up white	Lean mapping is activated. This mapping is recommended for firm/hard surfaces.
7	Indicator light Ⓑ lights up green	Rich mapping is activated. This mapping is recommended for sandy/loose surfaces.
FUEL	**FUEL** is displayed	The fuel level has reached the reserve mark.

6.9 Combination instrument

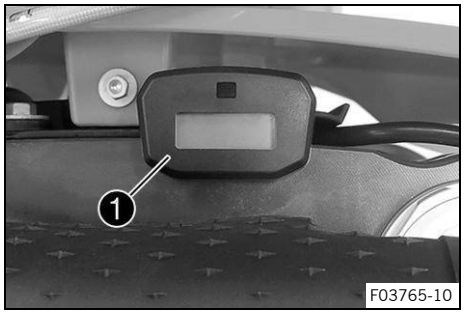

The combination instrument ❶ is attached in front of the handlebar.

The combination instrument shows the total operating hours of the engine.

The operating hours are counted when the engine is started and stopped when the engine is switched off.

Note

Nothing can be cleared or modified on the dashboard.

As soon as the diagnostics tool is connected, the hourmeter starts running.

Before longer diagnostic sessions, unplug the hourmeter behind the number plate.

6.10 Opening the fuel tank cap

DANGER

Fire hazard Fuel is highly flammable.

The fuel in the fuel tank expands when warm and can escape if overfilled.

- Do not refuel the vehicle in the vicinity of open flames, glowing, or smoldering objects.
- Make sure that nobody smokes in the vicinity of the vehicle during the refueling process.
- Switch off the engine for refueling.
- Make sure that no fuel is spilled; particularly not on hot parts of the vehicle.
- If any fuel is spilled, wipe it up immediately.
- Do not overfill the fuel tank.

WARNING

Danger of poisoning Fuel is harmful to health.

- Do not allow fuel to come into contact with skin, eyes, or clothing.
- Consult a doctor immediately if fuel has been ingested.
- Do not inhale fuel vapors.
- Rinse the affected area immediately with plenty of water in the event of contact with skin.
- Rinse eyes thoroughly with water and consult a doctor immediately if fuel comes into contact with eyes.
- If fuel spills on to your clothing, change the clothing.
- Store fuel properly in a suitable container and keep out of the reach of children.

NOTE

Environmental hazard Improper handling of fuel is dangerous to the environment.

- Do not allow fuel to enter the groundwater, the soil, or the sewage system.

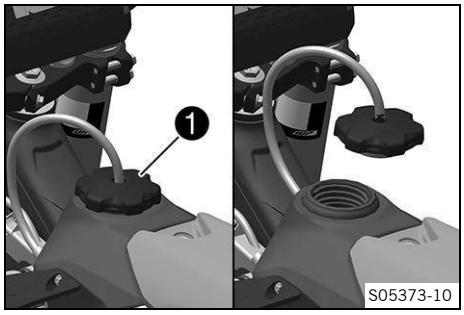

(All SX models)

- Turn fuel tank cap ❶ counterclockwise and lift it off.

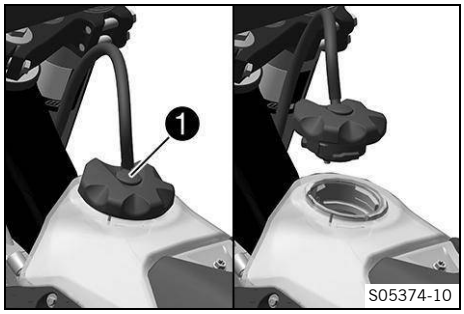

(All XC models)

- Press release button ❶, turn the fuel tank cap counter-clockwise, and lift it off.

6.11 Closing the fuel tank cap

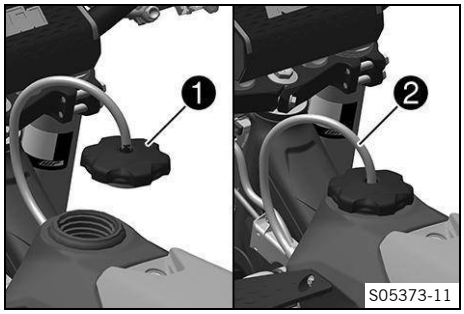

(All SX models)

– Mount fuel tank cap ❶ and turn it clockwise until the fuel tank is tightly closed.

Route hose of fuel tank vent ❷ without kinks.

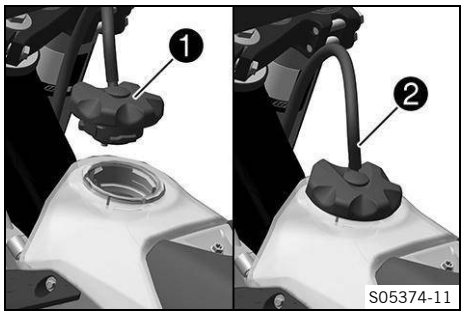

(All XC models)

– Mount filler cap ❶ and turn it clockwise until the release button engages.

Route hose of fuel tank vent ❷ without kinks.

6.12 Cold start button

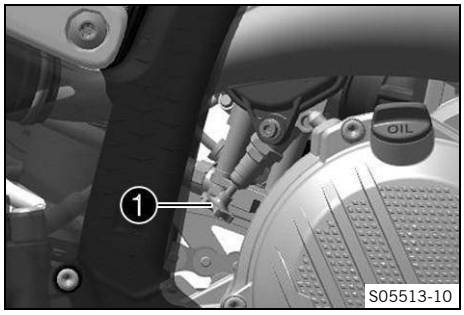

The cold start button ❶ is fitted to the bottom of the throttle valve body.

The electronic fuel injection extends the injection time when the engine is cold and the ambient temperature is low. To help the engine burn the increased amount of fuel, it must be supplied with additional oxygen by pushing the cold start button.

After briefly opening up the throttle and then releasing the throttle twist grip again, or turning the throttle twist grip towards the front, the cold start button returns to its original position.

Condition	Meaning
The cold start button is pushed in all the way to the stop.	Cold start button activated
The cold start button is in the basic position.	Cold start button deactivated

Note

Check whether the cold start button has returned to its basic position.

6.13 Idle speed adjustment screw

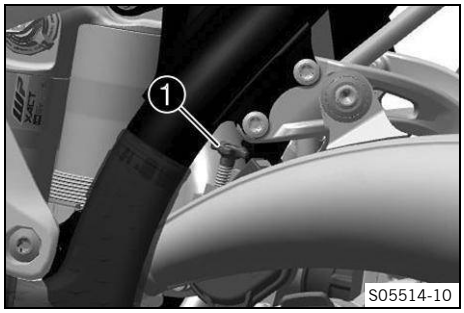

The idle setting of the throttle body substantially influences the vehicle's starting behavior, a stable idle speed, and the vehicle's response when the throttle is opened.

An engine with a correctly set idle speed is easier to start than an engine with the idle speed set incorrectly.

The idle speed is adjusted using idle speed adjustment screw ❶.

Increase the idle speed by turning the idle speed adjustment screw clockwise.

Decrease the idle speed by turning the idle speed adjustment screw counterclockwise.

6.14 Gear shift lever

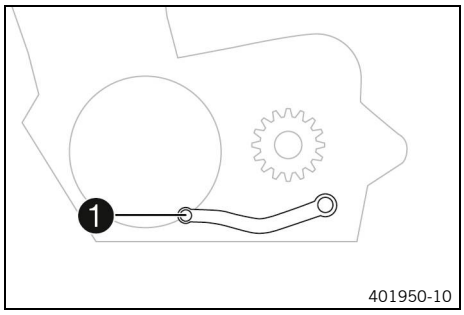

Gear shift lever ❶ is mounted on the left of the engine.

(All SX models)

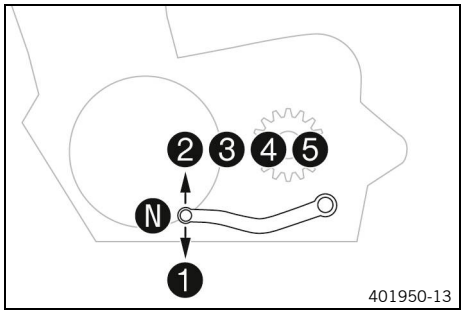

The gear positions can be seen in the figure.

The neutral or idle position is between the first and second gears.

(All XC models)

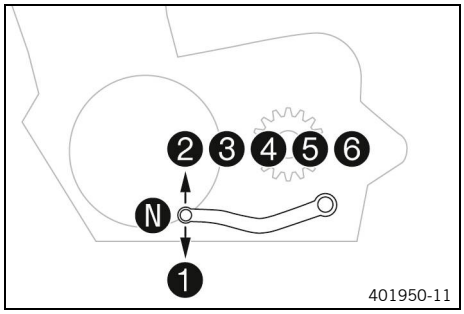

The gear positions can be seen in the figure.

The neutral or idle position is between the first and second gears.

6.15 Brake pedal

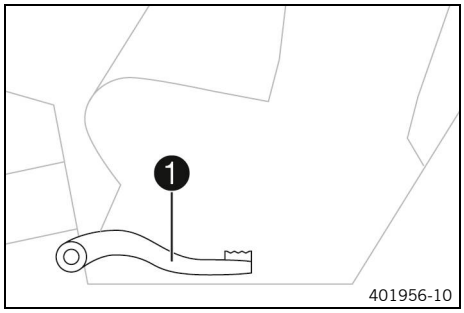

Brake pedal ❶ is located in front of the right footpeg.
The rear brake is operated with the brake pedal.

6.16 Plug-in stand (All SX models)

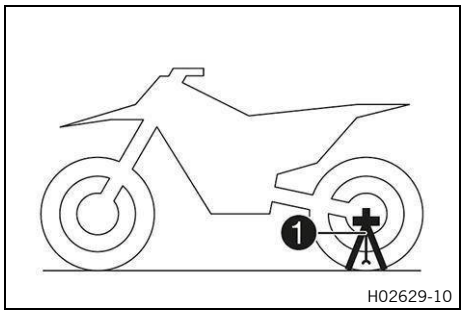

The holder for the plug-in stand ❶ is the left side of the wheel spindle.
The plug-in stand is used to park the motorcycle.
The plug-in stand is used as a fork support when transporting the motorcycle.

Note
Remove the plug-in stand before riding.

6.17 Side stand (All XC models)

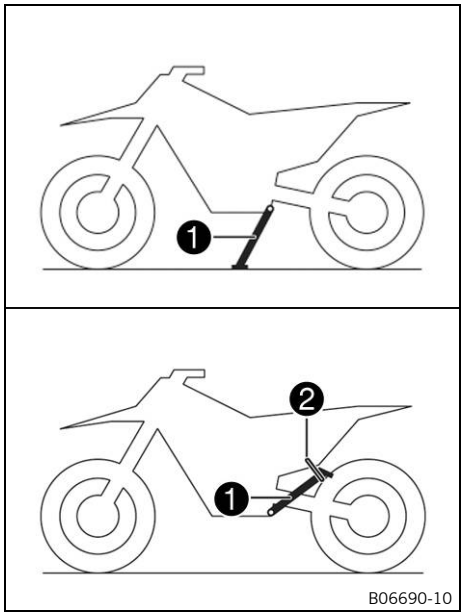

The side stand ❶ is located on the left of the vehicle.
The side stand is used for parking the motorcycle.

Note
When you are riding, side stand ❶ must be folded up and secured with rubber band ❷.

7.1 Notes on preparing for first use

DANGER
Danger of accidents A rider who is not fit to ride poses a danger to themself and to others.
– Do not operate the vehicle if you are not fit to ride due to alcohol, drugs, or medication.
– Do not operate the vehicle if you are physically or mentally incapable of doing so.

WARNING
Danger of accidents The vehicle is not designed to carry passengers.
– Do not ride with a passenger.

WARNING
Danger of accidents The brake system fails in the event of overheating.
If the brake pedal is not released, the brake pads grind continuously.
– Take your foot off the brake pedal when you are not braking.

WARNING
Danger of accidents Not adapting the riding style constitutes a major risk.
– Adapt the vehicle speed to the road conditions and your riding ability.

WARNING
Danger of accidents Total weight and axle loads influence the handling characteristic.
– Do not exceed the maximum permissible total weight or the axle loads.

WARNING
Risk of injury People who act without authorization endanger themselves and others.
– Never leave the vehicle unattended while the engine is running.
– Secure the vehicle against unauthorized access.

WARNING
Danger of accidents Different tire profiles on the front and rear wheels can make it more difficult to control the vehicle.
– Make sure that only tires of the same tread type are mounted to the front and rear wheel.

WARNING
Risk of injury Missing or inadequate protective clothing increases the risk of injury.
– Wear appropriate protective clothing such as helmet, boots, gloves as well as pants and a jacket with protectors on all rides.
– Always wear protective clothing that is in good condition and meets the legal regulations.

Note
When using the motorcycle, remember that others may be disturbed by excessive noise.

– Ensure that the pre–delivery inspection has been carried out by an authorized contractual partner.
  ✓ The delivery certificate is transferred upon vehicle handover.
– Read the entire owner's manual before riding for the first time.
– Get to know the controls.
– Adjust the basic position of the clutch lever. (p. 89)
– Adjust the basic position of the hand brake lever. (p. 92)
– Adjust the basic position of the brake pedal. (p. 98)
– Adjust the basic position of the gear shift lever. (p. 129)

– Get used to the handling characteristics of the motorcycle on suitable terrain before undertaking a more challenging ride.

Note
This vehicle is not approved for use on public roads.
When off-road, it is recommended that you be accompanied by another person with another vehicle so that you can help each other.

– Also, ride as slowly as possible and in a standing position to get a better feel for the motorcycle.
– Do not make any off-road trips that exceed your ability and experience.
– Hold the handlebar firmly with both hands and keep your feet on the footpegs when riding.

(All SX models)

– Do not take any luggage.

(All XC models)

– If luggage is carried, ensure it is fixed firmly as close as possible to the center of the vehicle and ensure even weight distribution between the front and rear wheels.

Note
Motorcycles react sensitively to any changes of weight distribution.

– The maximum permissible total weight and the maximum permissible axle loads must not be exceeded.

Maximum permissible total weight	335 kg (738.5 lb)
Maximum permissible front axle load	145 kg (319.7 lb)
Maximum permissible rear axle load	190 kg (418.9 lb)

– Check the spoke tension. (p. 109)

The spoke tension must be checked after half an hour of operation.

– Run in the engine. (p. 28)

7.2 Running in the engine

– During the running-in time, do not exceed the specified engine power.

Maximum engine power	
during the first 3 operating hours	< 70 %
during the first 5 operating hours	< 100 %

Avoid fully opening the throttle.

7.3 Starting performance of lithium-ion batteries at low temperatures

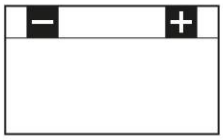

Lithium-ion batteries are far lighter than lead batteries, have a low self-discharge rate, and have more starting power at temperatures over 15 °C (60 °F). At low temperatures, however, the starting power of lithium-ion batteries drops to below that of lead batteries.

Several attempts to start may be required. Press the start button for 5 seconds, and wait 30 seconds between attempts. The pauses are necessary so that the heat created can be distributed through the lithium-ion battery without damaging the lithium-ion battery.

If the charged lithium-ion battery is unable to actuate the starter motor or does so only weakly at temperatures below 15 °C (60 °F), the battery is not faulty but needs to be warmed up internally to increase its starting power (current output).

The starting power increases as the battery warms up.

7.4 Preparing the vehicle for difficult operating conditions

Note

Use of the vehicle under difficult conditions, such as on sand or on wet and muddy surfaces, can result in significantly increased wear of components, such as the powertrain, brake system, or suspension components. For this reason, it may be necessary to inspect or replace parts before the next scheduled service interval.

- Prepare the air filter box cover for securing. (p. 77)
- Clean the air filter and air filter box. (p. 75)

  Note

  Check the air filter approx. every 30 minutes.

- Check the electrical socket connector for humidity and corrosion and to ensure it is firmly seated.
  - » If moisture, corrosion, or damage is found:
    - Clean and dry the socket connector, or change it if necessary.
- Change the mapping. (p. 126)

  Select mapping to match the background.

- Riding on dry sand. (p. 30)
- Riding on wet sand. (p. 30)
- Rides on wet and muddy surfaces. (p. 31)
- Riding at high temperatures or slow speed. (p. 31)
- Riding at low temperatures and in snow. (p. 32)

7.5 Preparing the vehicle for rides on dry sand

F03669-01

– Mount the air filter dust protection.

Read the accompanying mounting instructions.

Air filter dust protection cover (A46006920000)

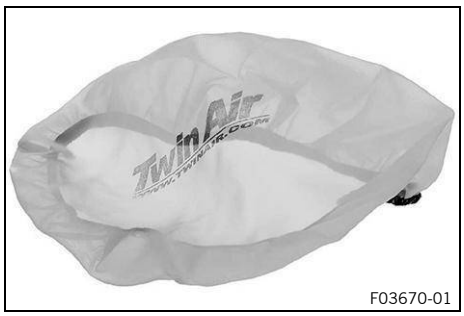

F03670-01

– Mount the air filter sand protection.

Read the accompanying mounting instructions.

Air filter sand protection (A46006922000)

600868-01

– Clean the chain.

Chain cleaner (p. 164)

– Mount the steel sprocket.
– Grease the chain.

Universal oil spray (p. 161)

– Clean the radiator fins.
– Straighten the bent radiator fins carefully.

Condition: Regular use in sand

– Change the piston every 10 operating hours.

7.6 Preparing the vehicle for rides on wet sand

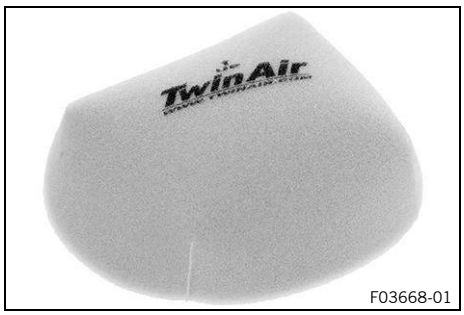

F03668-01

– Mount the air filter water protection.

Read the accompanying mounting instructions.

Air filter water protection (A46006921000)

600868-01

– Clean the chain.

Chain cleaner (p. 164)

– Mount the steel sprocket.
– Grease the chain.

Universal oil spray (p. 161)

– Clean the radiator fins.
– Straighten the bent radiator fins carefully.

Condition: Regular use in sand

– Change the piston every 10 operating hours.

7.7 Preparing for rides on wet and muddy surfaces

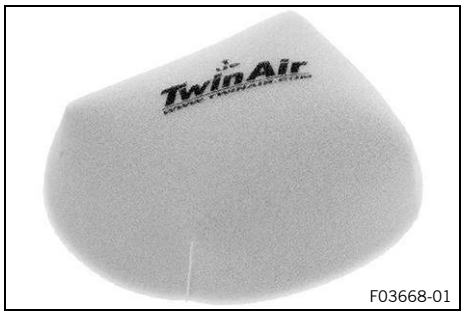

F03668-01

– Mount the air filter water protection.

Read the accompanying mounting instructions.

Air filter water protection (A46006921000)

600868-01

– Mount the steel sprocket.
– Clean the motorcycle. (p. 135)
– Straighten the bent radiator fins carefully.

7.8 Preparing vehicle for rides at high temperature or slow speed

600868-01

– Adjust the secondary transmission to the road conditions.

Note
The engine oil quickly gets hot if the clutch has to be operated very often due to an excessively high secondary transmission.

600868-01

– Clean the chain.

Chain cleaner (p. 164)

– Clean the radiator fins.
– Straighten the bent radiator fins carefully.
– Check the coolant level. (p. 118)

7.9 Preparing the vehicle for low temperatures or snow

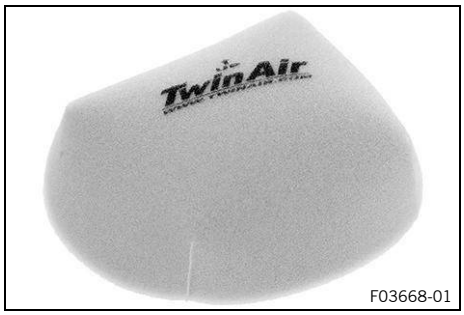

F03668-01

– Mount the air filter water protection.

Read the accompanying mounting instructions.

Air filter water protection (A46006921000)

8.1 Checks and maintenance measures when preparing for use

Note
Before every trip, check the condition of the vehicle and ensure that it is safe to operate.
The vehicle must be in perfect technical condition when it is being operated.

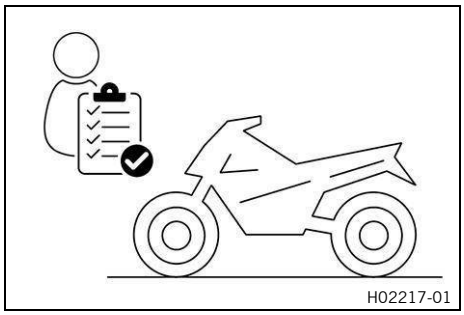

- Check the gear oil level. (p. 131)
- Check the brake fluid level for the front brake. (p. 93)
- Check the brake fluid level for the rear brake. (p. 99)
- Check that the brake pads of the front brake are secured. (p. 95)
- Check that the brake pads of the rear brake are secured. (p. 101)
- Check that the brake system is functioning properly.
- Check the coolant level. (p. 118)
- Check the chain for dirt. (p. 82)
- Check the chain, rear sprocket, engine sprocket, and chain guide. (p. 84)
- Check the chain tension. (p. 83)
- Check the tire condition. (p. 107)
- Check the tire pressure. (p. 108)
- Check the spoke tension. (p. 109)

  The spoke tension must be checked regularly as incorrect spoke tension will severely impair riding safety.
- Clean the dust boots of the fork legs. (p. 57)
- Bleed the fork legs. (p. 57)
- Check the air filter.
- Check the settings of all controls and ensure that they can be operated smoothly.
- Check all screws, nuts, and hose clamps regularly for tightness.
- Check the fuel level.

8.2 Starting the vehicle

DANGER
Danger of poisoning Exhaust gases are toxic and inhaling them may result in unconsciousness and death.
- Always ensure that there is sufficient ventilation when running the engine.
- Use suitable exhaust extraction when starting or running the engine in an enclosed space.

NOTE
Engine failure Running a cold engine at high engine speeds negatively impacts the service life of the engine.
- Always warm up the engine at low engine speeds.

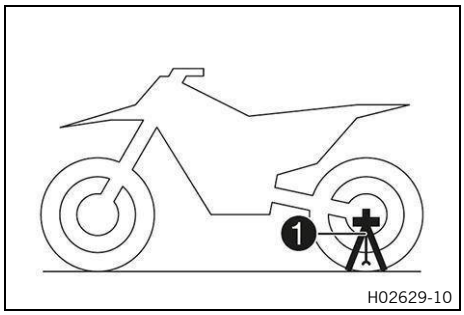

(All SX models)

– Remove plug-in stand ❶.

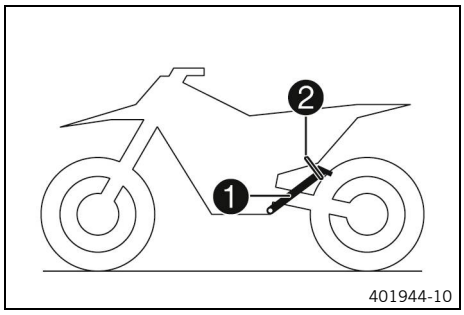

(All XC models)

– Take the motorcycle off side stand ❶ and secure the side stand with rubber band ❷.

– Shift the transmission into the neutral position.

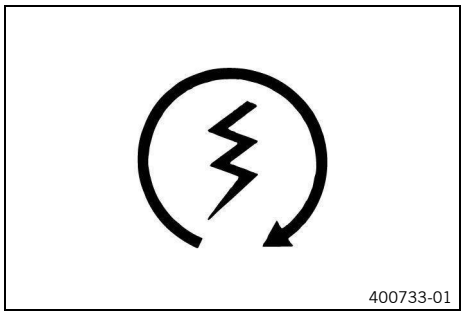

Condition: Ambient temperature: < 20 °C (< 68.0 °F)

– Press the cold start button in all the way to the stop.

– Press **electric starter** ⚡.

If the starting attempt is unsuccessful, wait for 15 seconds before making another attempt at starting.
After 6 unsuccessful starting attempts, do not try again, and check the vehicle for other malfunctions instead.

Note

At low temperatures, wait for 30 seconds.

At temperatures below 6 °C (43 °F), several attempts at starting may be necessary to warm-up the lithium-ion battery and thereby increase the starting power.

The malfunction indicator light lights up during the starting process.

8.3 Starting off

Note

The plug-in stand must be removed before riding.

When you are riding, the side stand must be folded up and secured with the rubber band.

– Pull the clutch lever, shift into first gear, release the clutch lever slowly and at the same time carefully open the throttle.

8.4 Shifting, riding.

WARNING
Danger of accidents If you downshift at high engine speed, the rear wheel blocks and the engine races.
– Do not downshift to a lower gear at high engine speeds.

Note
If you hear unusual noises while riding, stop immediately, switch off the engine, and contact an authorized contractual partner.
First gear is used for starting off or for steep inclines.

– Shift into a higher gear when conditions allow (incline, riding situation, etc.). To do so, release the throttle while simultaneously pulling the clutch lever, shift into the next gear, release the clutch lever and open the throttle.
– If you pushed the cold start button while starting, open the throttle briefly and release the throttle twist grip or turn the throttle twist grip forward.
  ✓ The cold start button goes to the basic position.
– After reaching maximum speed by fully opening the throttle twist grip, turn the throttle back so that it is ¾ open. This will reduce the speed slightly, but the fuel consumption will be considerably lower.
– Only open the throttle as much as the engine can handle. Abruptly opening the throttle increases fuel consumption.
– To shift down, brake and close the throttle at the same time.
– Pull the clutch lever and shift into a lower gear, release the clutch lever slowly, and either open the throttle or shift again.
– Switch off the engine if you are likely to be running at idle speed or stationary for a long time.

≥ 1 min

– Avoid riding the clutch frequently or for too long. This causes the gear oil, engine, and cooling system to heat up.
– Ride at a low engine speed instead of at a high engine speed when riding the clutch.

8.5 Braking

WARNING
Danger of accidents A spongy pressure point on the front or rear brake reduces the brake action.
– Do not drive the vehicle if the brake system has a spongy pressure point.

WARNING
Danger of accidents Braking with excessive force locks the wheels.
– Adapt your braking to the riding situation and the road conditions.

WARNING
Danger of accidents Moisture and dirt impair the brake system.
– Brake carefully several times to dry out and remove dirt from the brake pads and the brake discs.

– On sandy, wet, or slippery surfaces, use mostly the rear brake.
– Always finish braking before you go into a bend. Shift into a lower gear that suits the speed.
– Use the brake action of the engine on long downhill stretches. Shift down one or two gears, but do not overrev the engine when doing so. This means that significantly less braking is required and means the brake system does not overheat.

8.6 Stop, park

WARNING

Danger of burns Some vehicle components become hot when the vehicle is operated.

– Do not touch any parts such as the exhaust system, radiator, engine, damper, or brake system before the vehicle parts have cooled down.
– Allow the vehicle parts to cool down before performing any work on the vehicle.

WARNING

Risk of injury People who act without authorization endanger themselves and others.

– Never leave the vehicle unattended while the engine is running.
– Secure the vehicle against unauthorized access.

NOTE

Fire hazard Hot vehicle components pose a fire hazard and explosion risk.

– Do not park the vehicle near materials which are highly flammable or explosive.
– Allow the vehicle to cool down before covering it.

NOTE

Material damage The vehicle may be damaged if parked incorrectly.

Damage can occur if the vehicle rolls away or falls over.

The components for parking the vehicle are designed only for the weight of the vehicle.

– Park the vehicle on a firm and level surface.
– Make sure that nobody sits on the vehicle when it is parked on a stand.

– Brake the motorcycle.
– Shift the transmission into the neutral position.
– Press kill button when the engine is at idle speed until the engine stops.
– Park the motorcycle on firm ground.

8.7 Transportation

NOTE

Fire hazard Hot vehicle components pose a fire hazard and explosion risk.

– Do not park the vehicle near materials which are highly flammable or explosive.
– Allow the vehicle to cool down before covering it.

NOTE

Material damage The vehicle may be damaged if parked incorrectly.

Damage can occur if the vehicle rolls away or falls over.

The components for parking the vehicle are designed only for the weight of the vehicle.

– Park the vehicle on a firm and level surface.
– Make sure that nobody sits on the vehicle when it is parked on a stand.

(All SX models)

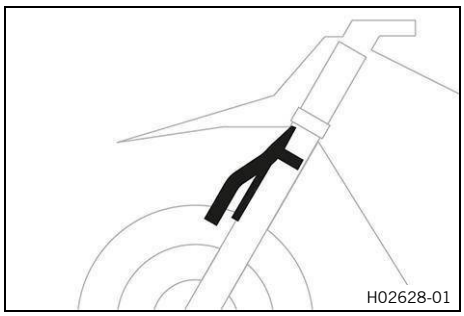

– Switch off the engine.
– Mount the plug-in stand on the fork legs.

Make sure the brake line runs in front of the plug-in stand and does not become wedged.

Plug-in stand (A46029094000)

Note
The plug-in stand is included in the scope of supply.

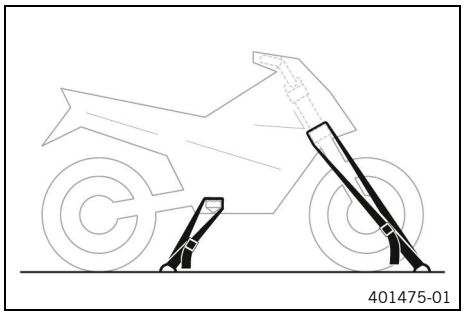

– Use tension belts or other suitable devices to secure the motorcycle against falling over or rolling away.

Only tighten the tie downs to the point that the plug-in stand is firmly in contact with the fender and tires.
Make sure that the plug-in stand is aligned with the underside of the fender.

(All XC models)

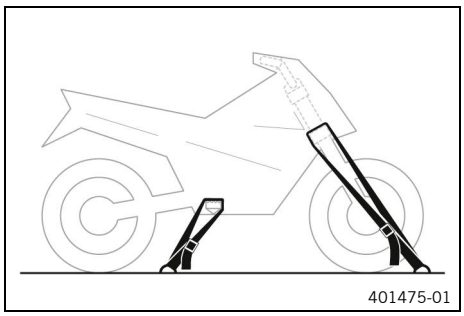

– Switch off the engine.
– Use tension belts or other suitable devices to secure the motorcycle against falling over or rolling away.

8.8 Refueling

DANGER
Fire hazard Fuel is highly flammable.
The fuel in the fuel tank expands when warm and can escape if overfilled.
– Do not refuel the vehicle in the vicinity of open flames, glowing, or smoldering objects.
– Make sure that nobody smokes in the vicinity of the vehicle during the refueling process.
– Switch off the engine for refueling.
– Make sure that no fuel is spilled; particularly not on hot parts of the vehicle.
– If any fuel is spilled, wipe it up immediately.
– Do not overfill the fuel tank.

WARNING
Danger of poisoning Fuel is harmful to health.
– Do not allow fuel to come into contact with skin, eyes, or clothing.
– Consult a doctor immediately if fuel has been ingested.
– Do not inhale fuel vapors.
– Rinse the affected area immediately with plenty of water in the event of contact with skin.
– Rinse eyes thoroughly with water and consult a doctor immediately if fuel comes into contact with eyes.

- If fuel spills on to your clothing, change the clothing.
- Store fuel properly in a suitable container and keep out of the reach of children.

NOTE

Environmental hazard Improper handling of fuel is dangerous to the environment.

- Do not allow fuel to enter the groundwater, the soil, or the sewage system.

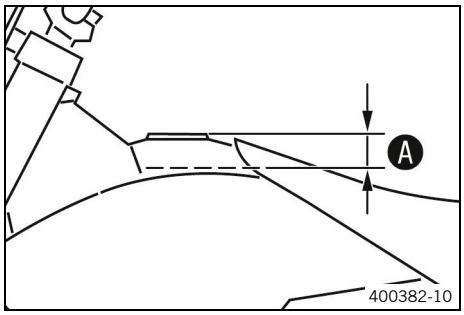

- Switch off the engine.
- Open the fuel tank cap. (p. 23)
- Fill the fuel tank with fuel no higher than A.

Level A	35 mm (1.38 in)

Total fuel tank capacity, approx. **(All SX models)**	
Super unleaded (95 octane) mixed with 2-stroke engine oil (1:60) (p. 161)	7.2 l (1.90 liq. gal_{US})
Total fuel tank capacity, approx. **(All XC models)**	
Super unleaded (95 octane) mixed with 2-stroke engine oil (1:60) (p. 161)	8.5 l (2.25 liq. gal_{US})
2-stroke engine oil (p. 162) fully synthetic	

- Close the fuel tank cap. (p. 24)

9.1 Service schedule

Any further work that results from the service work must be ordered separately and invoiced separately.

Different service intervals may apply in your country, depending on the local operating conditions.

If the vehicle is used in particularly harsh conditions such as heavy rain, mud, sand, snow, extreme temperatures, frequent full load etc., shorter service intervals than those in the table may be necessary.

Individual service intervals and scopes may change in the course of technical developments. The most up-to-date service schedule is available for authorized contractual partners for the electronic proof of service. Your authorized contractual partner will be happy to advise you.

	After one operating hour	After 15 operating hours / Every 15 operating hours	Every 45 operating hours	Every 90 operating hours	Every 24 months
Read out the fault memory using the diagnostics tool.	○	●	●	●	●
Check that the electrical equipment is functioning properly.	○	●	●	●	
Check and charge the 12 V battery.	○	●	●	●	●
Check that the brake pads of the front brake are secured. (p. 95)	○	●	●	●	●
Check that the brake pads of the rear brake are secured. (p. 101)	○	●	●	●	●
Check the brake discs. (p. 92)	○	●	●	●	●
Check the brake lines for damage and tightness.	○	●	●	●	●
Check the brake fluid level for the front brake. (p. 93)	○	●	●		
Change the brake fluid for the front brake.				●	●
Check the brake fluid level for the rear brake. (p. 99)	○	●	●		
Change the brake fluid for the rear brake.				●	●
Check/correct the fluid level of the hydraulic clutch. (p. 89)			●		
Change the hydraulic clutch fluid. (p. 90)				●	●
Check the free travel on the hand brake lever. (p. 92)	○	●	●	●	●
Check the free travel of the brake pedal. (p. 98)	○	●	●	●	●
Check the idle speed.	○	●	●	●	●
Change the gear oil. (p. 132)	○	●	●	●	●
Check all hoses (e.g. fuel, cooling, bleeder, drainage, etc.) and boots for cracking, leaks, and correct routing.	○	●	●	●	●
Check the cables for damage and that there are no kinks in the routing.		●	●	●	●
Check that the clutch cables are undamaged, routed without kinks, and set correctly.		●	●	●	●
Check the frame. (p. 87)		●	●	●	
Check the swingarm. (p. 87)		●	●	●	
Check the swingarm bearing for play.			●	●	
Check the heim joint on the shock absorber for play.			●	●	
Check the shock absorber linkage.		●	●	●	
Check the tire condition. (p. 107)		●	●	●	●
Check the tire pressure. (p. 108)	○	●	●	●	●

					Every 24 months
				Every 90 operating hours	
			Every 45 operating hours		
		After 15 operating hours / Every 15 operating hours			
	After one operating hour				
Check the wheel bearing for play.		●	●	●	
Check the hubs.		●	●	●	
Check the rim run-out.	○	●	●	●	
Check the spoke tension. (p. 109)	○	●	●	●	
Check the chain, rear sprocket, engine sprocket, and chain guide. (p. 84)	○	●	●	●	
Check the chain tension. (p. 83)	○	●	●	●	●
Grease all moving parts (e.g., hand lever, chain, etc.) and check for smooth operation.	○	●	●	●	●
Check the basic throttle valve position sensor setting.		○	●	●	●
Change the spark plug and spark plug connector.		●	●	●	
Change the fuel filter.				●	●
Check the clutch.		●	●	●	
Clean the air filter and air filter box. (p. 75)		●	●	●	●
Change the damping material on the main silencer. (p. 78)			●	●	
Carry out fork service.			●	●	
Service the shock absorber.			●	●	
Check all screws, nuts, and hose clamps for a tight fit.	○	●	●	●	●
Change the fuel screen. (p. 130)	○	●	●	●	●
Check the fuel pressure.	○		●	●	●
Check the frost protection and coolant level. (p. 117)			●	●	
Check the coolant level. (p. 118)	○	●			
Change the coolant. (p. 121)					●
Check the steering head bearing play. (p. 65)	○	●			
Lubricate the steering head bearing. (p. 67)			●	●	●
Check the starter drive.			●	●	●
Check the reed valve housing, diaphragm, and intake manifold.		●	●	●	
Perform minor engine service. (Change the piston. Check the cylinder head. Change the O-rings of the manifold and the cylinder head. Check the cylinder and Z-dimension. Clean the exhaust control. Check the exhaust control for function and smooth operation. Program the exhaust control end positions. Check the pressure sensor flange for cracks and damage. Remove combustion residues from the exhaust port.)		●	●	●	
Perform major engine service including removing and re-installing the engine. (Change the connecting rod, big (bottom) end bearing and crankshaft pin. Check the transmission and shift mechanism. Change all the engine bearings, the radial shaft seal rings, and the seals.)			●	●	
Final check: check vehicle for operating safety.	○	●	●	●	●
Take a test ride.	○	●	●	●	●
Read out the fault memory after the test ride using the diagnostics tool.	○	●	●	●	●

					Every 24 months
				Every 90 operating hours	
			Every 45 operating hours		
		After 15 operating hours / Every 15 operating hours			
	After one operating hour				
Enter the electronic proof of service in the contractual partner portal.	○	●	●	●	●

○ One-time interval

● Periodic interval

10.1 Checking the basic chassis setting with the rider's weight

Note
When adjusting the basic chassis setting, first adjust the shock absorber and then the fork.

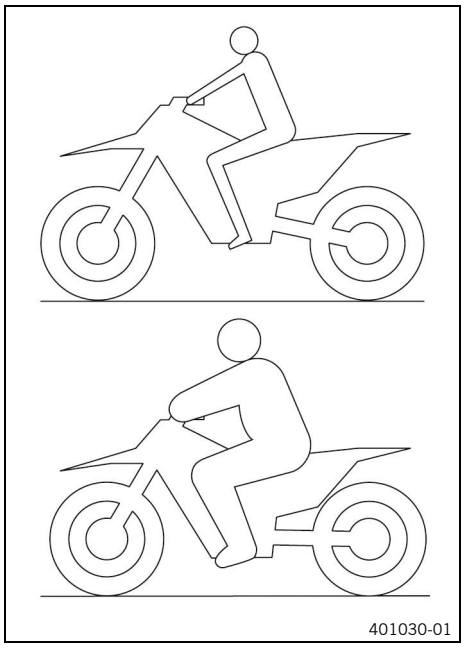

- For optimal motorcycle riding characteristics and to avoid damage to forks, shock absorbers, swingarm, and frame, the basic settings of the suspension components must match the rider's weight.
- As delivered, KTM offroad motorcycles are adjusted for an average rider's weight (with full protective clothing).

Standard rider's weight	75 kg ... 85 kg (165.3 lb ... 187.4 lb)

- If the rider's weight is above or below this range, the basic setting of the suspension components must be adjusted accordingly.
- Small weight differences can be compensated for by adjusting the preload, but in the case of large weight differences, the springs must be replaced.

10.2 Compression damping of the shock absorber

The compression damping of the shock absorber is divided into two ranges: high-speed and low-speed.

High-speed and low-speed refer to the compression speed of the rear wheel suspension and not to the vehicle speed.

The high-speed compression has an effect, for example, when landing after a jump: the rear wheel suspension compresses quickly.

The low-speed compression has an effect, for example, when riding over long bumps: the rear wheel suspension compresses slowly.

These two ranges can be adjusted separately, although the transition between high-speed and low-speed is floating. As a result, changes in the high-speed range affect the compression damping in the low-speed range and vice versa.

10.3 Adjusting the low-speed compression damping of the shock absorber

CAUTION
Risk of injury Parts of the shock absorber will move erratically if the shock absorber is detached incorrectly.
The shock absorber is filled with highly compressed nitrogen.
- Please follow the description provided.

Note
The effect of the low-speed compression adjustment can be seen in slow to normal compression of the shock absorber.

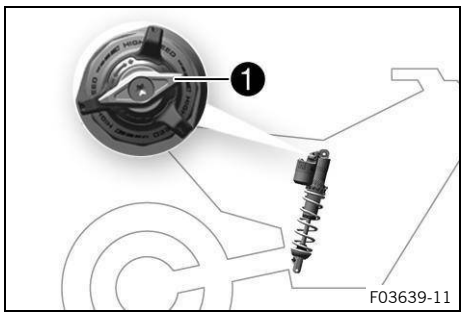

– Turn adjusters ❶ clockwise all the way to the stop.
– Turn counterclockwise by the number of clicks corresponding to the shock absorber type.

Low-speed compression damping **(All SX models)**	
Comfort	17 clicks
Standard	15 clicks
Sport	13 clicks

Low-speed compression damping **(All XC models)**	
Comfort	17 clicks
Standard	15 clicks
Sport	13 clicks

Note
Turning clockwise increases damping; turning anticlockwise reduces damping.

10.4 Adjusting the high-speed compression damping of the shock absorber

CAUTION
Risk of injury Parts of the shock absorber will move erratically if the shock absorber is detached incorrectly. The shock absorber is filled with highly compressed nitrogen.
– Please follow the description provided.

Note
The effect of the high-speed compression adjustment can be seen in the fast compression of the shock absorber.

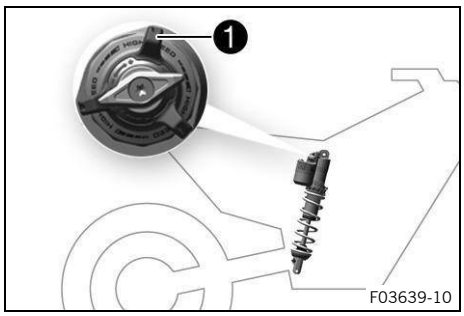

– Turn adjusters ❶ clockwise all the way to the stop.
– Turn counterclockwise by the number of turns corresponding to the shock absorber type.

High-speed compression damping **(All SX models)**	
Comfort	2 turns (720°)
Standard	1.5 turns (540°)
Sport	1 turn (360°)

High-speed compression damping **(All XC models)**	
Comfort	2 turns (720°)
Standard	1.5 turns (540°)
Sport	1 turn (360°)

Note
Turning clockwise increases damping; turning anticlockwise reduces damping.

10.5 Adjusting the rebound damping of the shock absorber

CAUTION
Risk of injury Parts of the shock absorber will move erratically if the shock absorber is detached incorrectly. The shock absorber is filled with highly compressed nitrogen.
– Please follow the description provided.

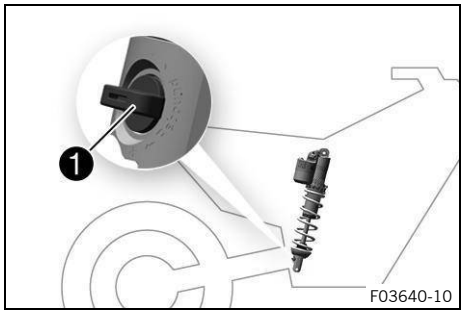

– Turn adjusters 1 clockwise up to the last perceptible click.
– Turn counterclockwise by the number of clicks corresponding to the shock absorber type.

Rebound damping **(All SX models)**	
Comfort	17 clicks
Standard	15 clicks
Sport	13 clicks

Rebound damping **(All XC models)**	
Comfort	17 clicks
Standard	15 clicks
Sport	13 clicks

Note
Turning clockwise increases damping; turning anticlockwise reduces damping on rebound.

10.6 Measuring the dimension of the unloaded rear wheel

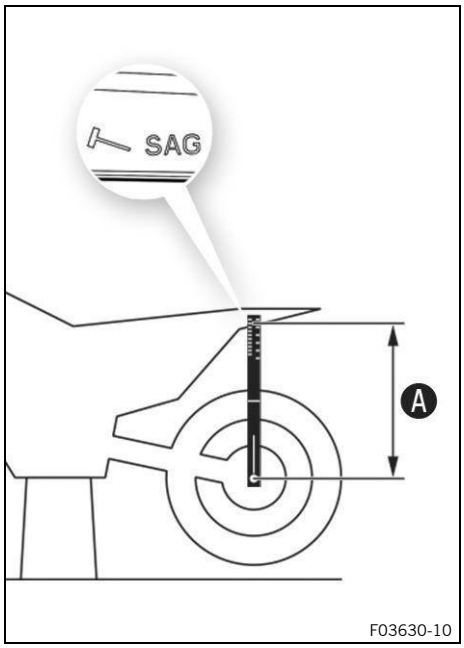

Preparatory work

– Raise the motorcycle with a lift stand. (p. 56)

Main work

– Position the sag scale in the rear axle and measure the distance to marking **SAG** on the rear fender.

Sag scale (00029090200)

– Note the value as dimension A.

Reworking

– Remove the motorcycle from the lift stand. (p. 56)

10.7 Checking the static sag of the shock absorber

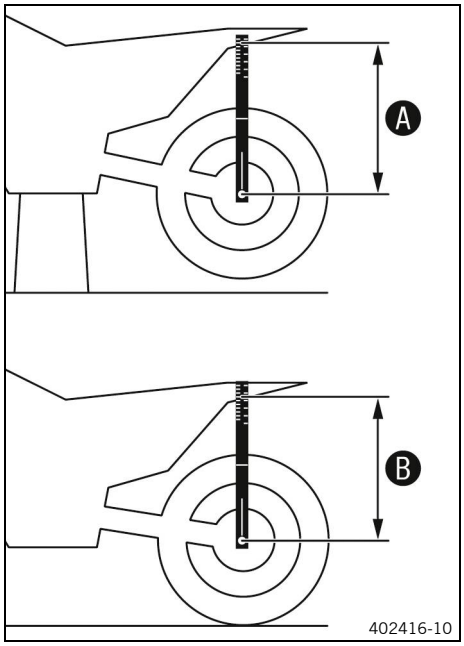

– Measure dimension A of rear wheel unloaded. (p. 45)
– Hold the motorcycle upright with aid of an assistant.
– Measure the distance again between the rear axle and marking **SAG** on the rear fender using the sag scale.
– Note the value as dimension B.

Note
The static sag is the difference between measurements A and B.

– Check the static sag.

Static sag **(All SX models)**	35 mm (1.38 in)
Static sag **(All XC models)**	35 mm (1.38 in)

» If the static sag is more or less than the specified value:
  – Adjust the preload for the shock absorber. (p. 47)

10.8 Checking the rider sag of the shock absorber

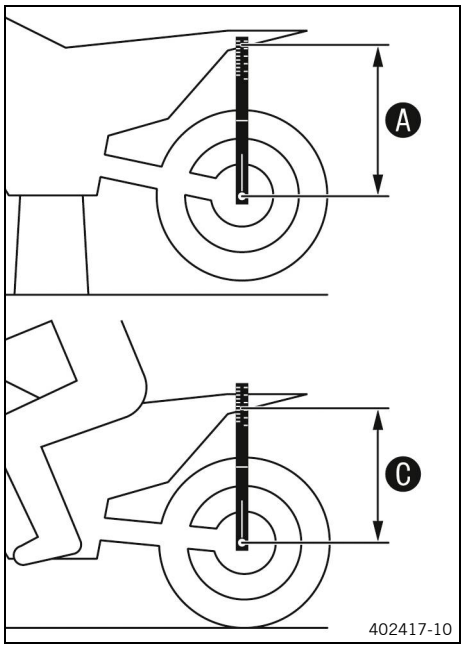

– Measure dimension A of rear wheel unloaded. (p. 45)
– With another person holding the motorcycle, sit on the saddle with full protective clothing in a normal sitting position (feet on footrests) and bounce up and down a few times.
  ✓ The rear wheel suspension levels out.
– With the help of another person, remeasure the distance between the rear axle and marking **SAG** on the rear fender using the sag scale.
– Note the value as dimension C.

Note
The rider sag is the difference between measurements A and C.

– Check the rider sag.

Rider sag **(All SX models)**	105 mm (4.13 in)
Rider sag **(All XC models)**	105 mm (4.13 in)

» If the rider sag differs from the specified measurement:
  – Adjust the rider sag. (p. 48)

10.9 Adjusting the preload for the shock absorber

CAUTION

Risk of injury Parts of the shock absorber will move erratically if the shock absorber is detached incorrectly. The shock absorber is filled with highly compressed nitrogen.

– Please follow the description provided.

Note

Before changing the preload, make a note of the present setting, e.g., by measuring the spring length.

Preparatory work

– Raise the motorcycle with a lift stand. (p. 56)
– Remove the frame protector. (p. 60)
– Remove the muffler. (p. 77)
– Remove the shock absorber. (p. 69)
– After removing the shock absorber, clean it thoroughly.

Main work

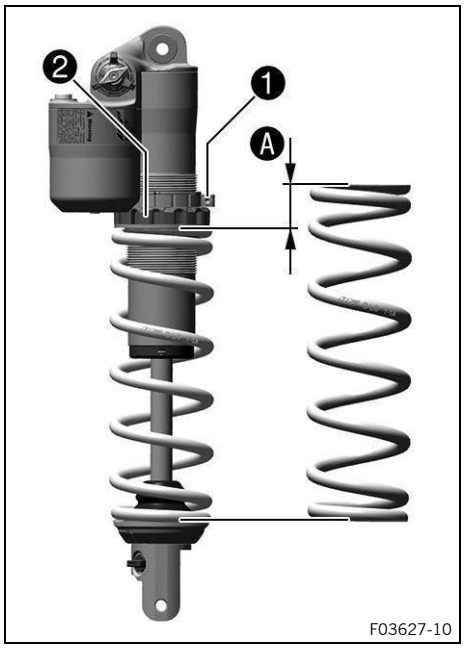

– Loosen screw 1.
– Turn adjusting ring 2 until the spring is no longer under tension.

Hook wrench (90129051000)

Note

If the spring cannot be fully released, the spring must be removed to accurately measure the spring length.

– Measure the total spring length while the spring is not under tension.
– Tension the spring by turning adjusting ring 2 to the specified degree A.

Preload **(All SX models)**	8 mm (0.31 in)
Preload **(All XC models)**	8 mm (0.31 in)

Note

Depending on the static sag and/or the rider sag, it may be necessary to increase or decrease the spring preload.

– Tighten screw 1.

Screw, shock absorber adjusting ring	
M5×20	5 Nm (3.7 ft·lb_f)

Make sure that the adjusting ring does not touch any other components when installed.

Reworking

- Install the shock absorber. (p. 70)
- Check the free travel of the brake pedal. (p. 98)
- Install the muffler. (p. 77)
- Install the frame protector. (p. 60)
- Remove the motorcycle from the lift stand. (p. 56)

10.10 Adjusting the rider sag

Preparatory work

- Raise the motorcycle with a lift stand. (p. 56)
- Remove the frame protector. (p. 60)
- Remove the muffler. (p. 77)
- Remove the shock absorber. (p. 69)
- After removing the shock absorber, clean it thoroughly.

Main work

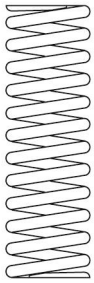

- Select and mount a suitable spring.

Spring rate **(All SX models)**	
Weight of rider: 65 kg … 75 kg (143.3 lb … 165.3 lb)	42 N/mm (239.8 lb_f/in)
Weight of rider: 75 kg … 85 kg (165.3 lb … 187.4 lb)	45 N/mm (257.0 lb_f/in)
Weight of rider: 85 kg … 95 kg (187.4 lb … 209.4 lb)	48 N/mm (274.1 lb_f/in)

Spring rate **(All XC models)**	
Weight of rider: 65 kg … 75 kg (143.3 lb … 165.3 lb)	42 N/mm (239.8 lb_f/in)
Weight of rider: 75 kg … 85 kg (165.3 lb … 187.4 lb)	45 N/mm (257.0 lb_f/in)
Weight of rider: 85 kg … 95 kg (187.4 lb … 209.4 lb)	48 N/mm (274.1 lb_f/in)

Note
The spring rate is shown on the outside of the spring.

Reworking

- Install the shock absorber. (p. 70)
- Check the free travel of the brake pedal. (p. 98)
- Install the muffler. (p. 77)
- Install the frame protector. (p. 60)
- Remove the motorcycle from the lift stand. (p. 56)
- Check the static sag of the shock absorber. (p. 46)

– Check the rider sag of the shock absorber. (p. 46)
– Adjust the rebound damping of the shock absorber. (p. 44)

10.11 Air suspension XACT

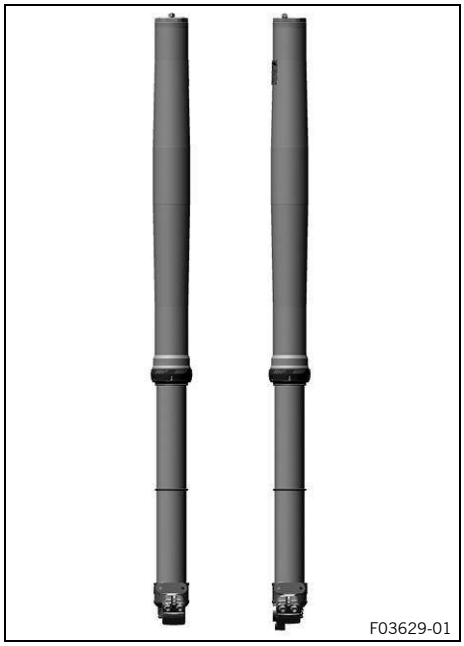

Air suspension **WP XACT** is used in the fork.

In this system, the suspension is located in the left fork leg and damping in the right fork leg.

As fork springs are no longer required, a significant weight advantage is achieved when compared to conventional forks. The response on slightly uneven surfaces is significantly improved.

In normal driving mode, suspension is provided exclusively by an air cushion. A steel spring is located in the left fork leg as an end stop.

Note
If the fork frequently bottoms out, then the fork air pressure must be increased to avoid damage to the fork and frame.

The air pressure in the fork can be quickly adjusted to the rider's weight, surface conditions, and the rider's preference using a fork air pump. The fork does not have to be dismantled. The time-consuming mounting of harder or softer fork springs is not required.

If the air chamber loses air due to a damaged seal, the fork will still not sag. In this case the air is retained in the fork. The suspension travel is maintained as far as possible. The damping becomes harder, and the riding comfort is reduced.

As with a conventional fork, the damping can be adjusted in rebound and compression stages.

The rebound adjustment is located at the lower end of the right fork leg.

The compression adjustment is located at the upper end of the right fork leg.

10.12 Checking the basic setting of the fork

Note
For various reasons, no exact rider sag can be determined for the fork.

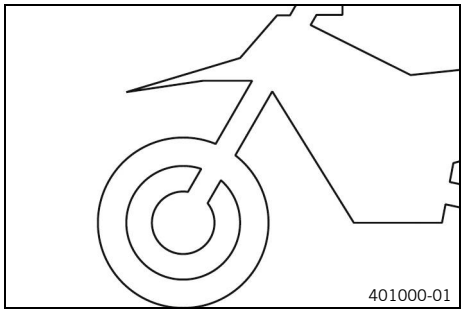

– Smaller differences in the rider's weight can be compensated for by the fork air pressure.
– However, if the fork frequently bottoms out (hard end stop on compression), the fork air pressure must be increased, within the specified values, to avoid damage to the fork and frame.
– If the fork feels unusually hard after extended periods of operation, the fork legs need to be bled.

10.13 Adjusting the fork air pressure (All SX models)

WARNING

Danger of accidents Modifications to the suspension settings that are not properly coordinated can impair the handling and overload components.

– Only make adjustments within the recommended range.
– Ride slowly to start with after making adjustments to get the feel of the new handling characteristics.

Note

Check or adjust the air pressure under the same conditions at the earliest 5 minutes after switching off the engine.

The air suspension is located in the left fork leg. The pressure and rebound damping is located in the right fork leg.

Preparatory work

– Raise the motorcycle with a lift stand. (p. 56)

Main work

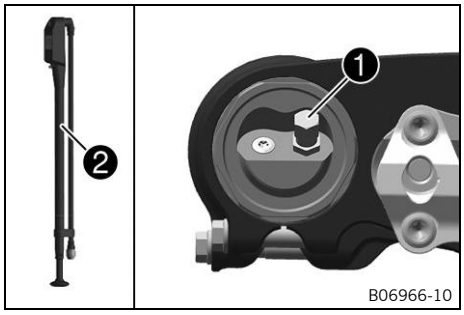

– Remove protection cap ❶.
– Fully put fork air pump ❷ together.

Fork air pump (79412966100)

Note

The fork air pump is included as part of the motorcycle's accessory pack.

– Connect the fork air pump to the left fork leg.

Read the accompanying instructions.

✓ The fork air pump indicator switches on automatically.
✓ A little air escapes from the fork leg when connecting.

Note

This is due to the volume of the hose and is not due to a defect in the fork air pump or the fork.

– Adjust the air pressure as specified.

Do not set the air pressure outside the specified range.

Air pressure	
Weight of rider: 65 kg … 75 kg (143.3 lb … 165.3 lb)	10 bar (145 psi)
Weight of rider: 75 kg … 85 kg (165.3 lb … 187.4 lb)	10.2 bar (147.9 psi)
Weight of rider: 85 kg … 95 kg (187.4 lb … 209.4 lb)	10.4 bar (150.8 psi)

Gradual change of the air pressure in steps by	0.2 bar (2.9 psi)
Minimum air pressure	7 bar (102 psi)

Maximum air pressure	12 bar (174 psi)

– Disconnect the fork air pump from the left fork leg.
  ✓ When disconnecting, excess pressure will escape from the hose – the fork leg itself does not lose any air.
  ✓ The fork air pump display switches off automatically after 80 seconds.
– Mount the protection cap.

Only mount the protection cap by hand.

Reworking

– Remove the motorcycle from the lift stand. (p. 56)

10.14 Adjusting the compression damping of the fork

Note
The hydraulic compression damping determines the fork suspension behavior.

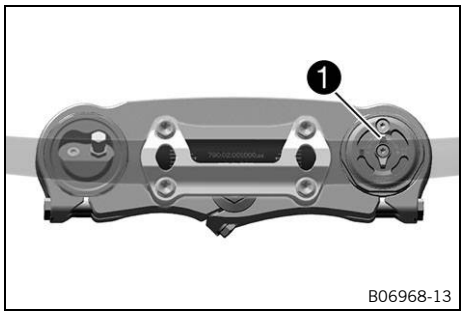

(All SX models)

– Turn adjusters 1 clockwise up to the last perceptible click.

Note
Adjusters 1 are located at the top end of the fork legs.

– Turn clockwise by the number of clicks corresponding to the fork type.

Compression damping	
Comfort	17 clicks
Standard	12 clicks
Sport	7 clicks

Note
Turning clockwise increases damping; turning counterclockwise reduces damping during compression.

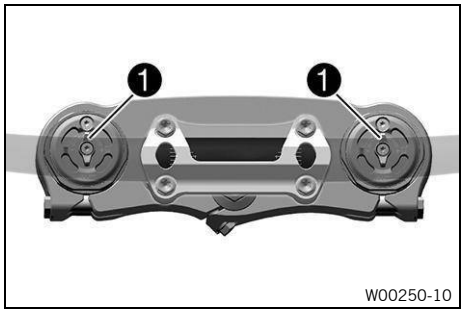

(All XC models)

– Turn adjusters 1 clockwise up to the last perceptible click.

Note
Adjusters 1 are located at the top end of the fork legs.

– Turn clockwise by the number of clicks corresponding to the fork type.

Compression damping	
Comfort	17 clicks
Standard	12 clicks
Sport	7 clicks

Note
Turning clockwise increases damping; turning counterclockwise reduces damping during compression.

10.15 Adjusting the rebound damping of the fork

Note
The hydraulic rebound damping determines the fork suspension behavior.

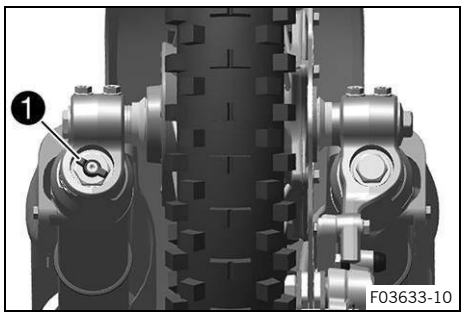

(All SX models)

– Turn adjusters ❶ clockwise all the way to the stop.

Note
Adjuster ❶ is located at the lower end of the right fork leg.

– Turn clockwise by the number of clicks corresponding to the fork type.

Rebound damping	
Comfort	23 clicks
Standard	18 clicks
Sport	13 clicks

Note
Turning clockwise increases damping; turning anticlockwise reduces damping on rebound.

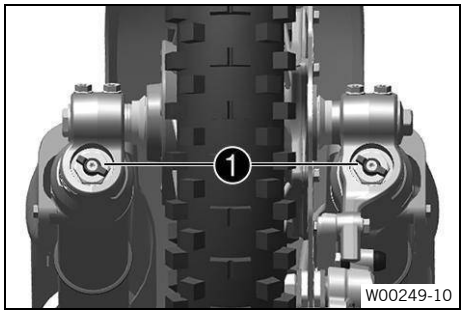

(All XC models)

– Turn adjusters ❶ clockwise all the way to the stop.

Note
Adjusters ❶ are located at the bottom end of the fork legs.

– Turn clockwise by the number of clicks corresponding to the fork type.

Rebound damping	
Comfort	23 clicks
Standard	18 clicks
Sport	13 clicks

Note
Turning clockwise increases damping; turning anticlockwise reduces damping on rebound.

10.16 Handlebar position

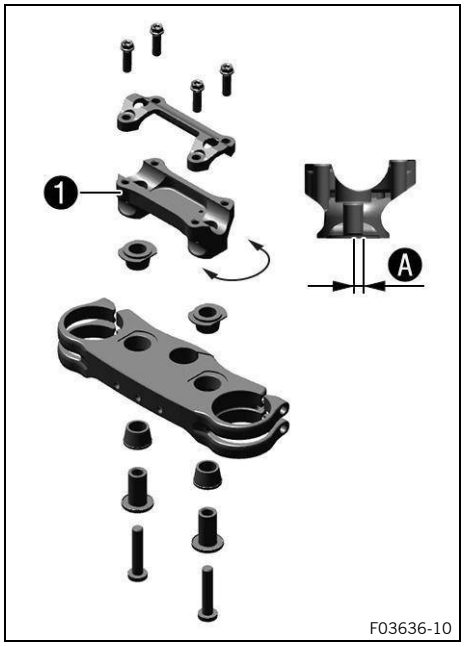

The holes on handlebar mount 1 are placed at a distance of A from the center.

Hole distance A	3.5 mm (0.138 in)

The handlebar can be mounted in 2 different positions. This allows the handlebar to be mounted in the most comfortable position for the rider.

Note
In addition, the handlebar can be mounted rigidly or on a rubber support.

10.17 Adjusting the handlebar position

WARNING
Danger of accidents A repaired handlebar poses a safety risk.
If the handlebar is bent or straightened, the material becomes fatigued. The handlebar may break as a result.
– Change the handlebar if the handlebar is damaged or bent.

Note
The handlebar can be mounted rigidly or on a rubber bearing.

Preparatory work
– Remove the handlebar pad.

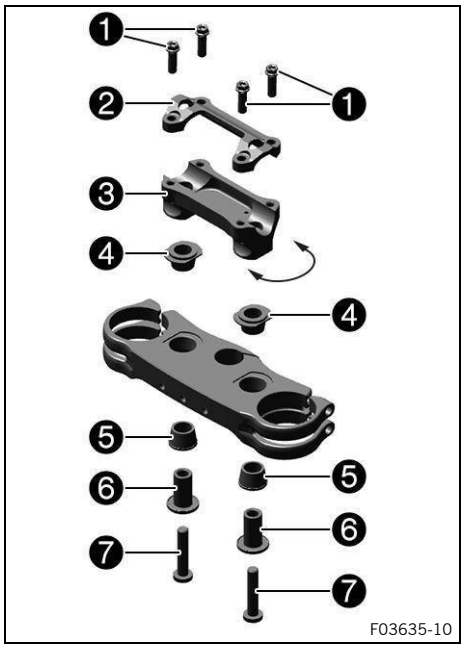

Main work

– Remove screws ❶. Take off handlebar clamp ❷. Remove the handlebar and lay it to one side.

Protect the components against damage by covering them.
Do not kink the cables or lines.

– Remove screws ❼ and bushings ❻. Take off handlebar support ❸.

– Select one of the following alternatives.

Adjusting the handlebar position with handlebar clamp with rubber bushings

– Position the rubber bushings ❹ and ❺.
– Place the handlebar mount in the required position.

Note
The handlebar mount is longer and higher on one side.

– Mount and tighten the screws ❼ with the bushings ❻.

Screw, handlebar mount on triple clamp	
M10×50	40 Nm (29.5 ft·lb$_f$) **Loctite® 243**

– Position the handlebar.

Make sure the cables and wiring are positioned correctly.

– Position handlebar clamp ❷.
– Mount screws ❶, but do not tighten yet.

First bolt the handlebar clamp with screws ❶ onto the longer, higher side of the handlebar support so that both parts touch.

– Tighten screws ❶ evenly.

Screw, handlebar clamp on handlebar mount	
M8×25	20 Nm (14.8 ft·lb$_f$)

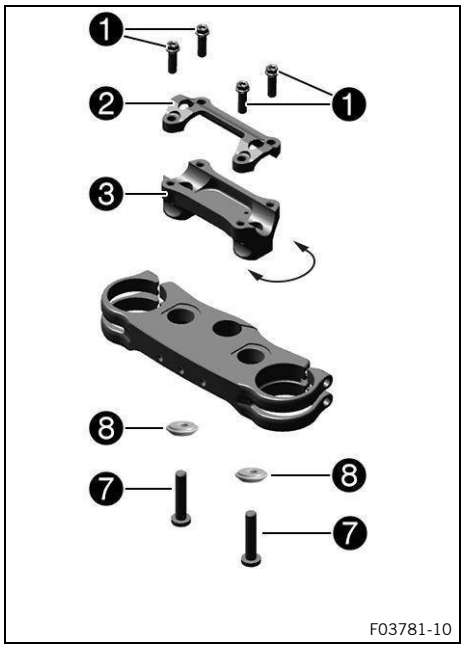

Adjusting the handlebar position with the rigid handlebar clamp

– Place the handlebar mount in the required position.

> **Note**
> The handlebar mount is longer and higher on one side.

– Mount and tighten the screws ❼ with the bushings ❽.

Screw, handlebar mount on triple clamp	
M10×50	40 Nm (29.5 ft·lb$_f$) **Loctite® 243**

Rigid handlebar clamp bushing (A46001038010)

✓ The conical side of the bushing faces downward.

– Position the handlebar.

Make sure the cables and wiring are positioned correctly.

– Position handlebar clamp ❷.

– Mount screws ❶, but do not tighten yet.

First bolt the handlebar clamp with screws ❶ onto the longer, higher side of the handlebar support so that both parts touch.

– Tighten screws ❶ evenly.

Screw, handlebar clamp on handlebar mount	
M8×25	20 Nm (14.8 ft·lb$_f$)

Reworking

– Mount the handlebar pad.

11.1 Raising the motorcycle with a lift stand

NOTE

Material damage The vehicle may be damaged if parked incorrectly.
Damage can occur if the vehicle rolls away or falls over.
The components for parking the vehicle are designed only for the weight of the vehicle.
– Park the vehicle on a firm and level surface.
– Make sure that nobody sits on the vehicle when it is parked on a stand.

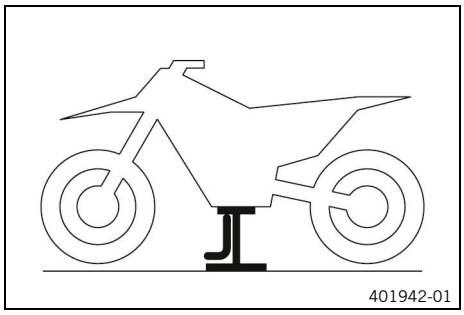

– Raise the motorcycle at the frame underneath the engine.

Lift stand (78129955100)

✓ Neither wheel is in contact with the ground.
– Secure the motorcycle against falling over.

11.2 Removing the motorcycle from the lift stand

NOTE

Material damage The vehicle may be damaged if parked incorrectly.
Damage can occur if the vehicle rolls away or falls over.
The components for parking the vehicle are designed only for the weight of the vehicle.
– Park the vehicle on a firm and level surface.
– Make sure that nobody sits on the vehicle when it is parked on a stand.

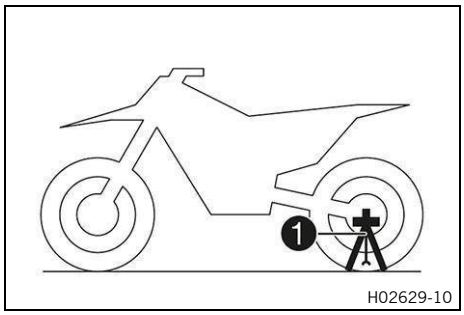

(All SX models)

– Remove the motorcycle from the lift stand.
– Remove the lift stand.
– To park the motorcycle, insert plug-in stand ❶ on the left side of the wheel spindle.

Remove the plug-in stand before riding.

Plug-in stand (A46029094000)

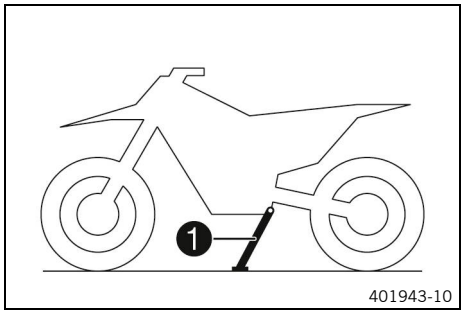

(All XC models)

– Remove the motorcycle from the lift stand.
– Remove the lift stand.
– To park the motorcycle, press side stand ❶ to the ground with your foot and lean the motorcycle on it.

When you are riding, the side stand must be folded up and secured with the rubber band.

11.3 Bleeding the fork legs

Preparatory work

– Raise the motorcycle with a lift stand. (p. 56)

Main work

(All SX models)

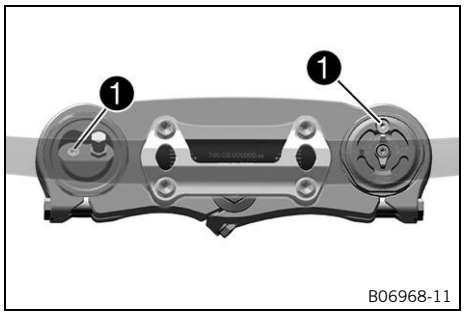

B06968-11

– Loosen bleeder screw 1.
  ✓ Any excess pressure escapes from the inner fork.
– Tighten the bleeder screw.

(All XC models)

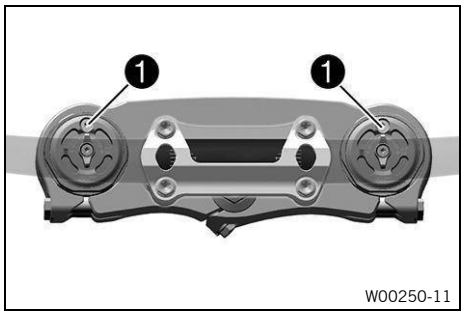

W00250-11

– Loosen bleeder screw 1.
  ✓ Any excess pressure escapes from the inner fork.
– Tighten the bleeder screw.

Reworking

– Remove the motorcycle from the lift stand. (p. 56)

11.4 Cleaning the dust boots of the fork legs

Preparatory work

– Raise the motorcycle with a lift stand. (p. 56)
– Remove the fork protector. (p. 58)

Main work

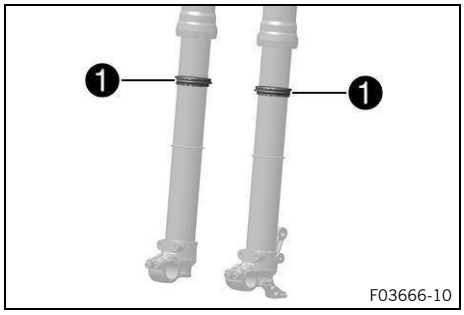

F03666-10

– Push dust boot 1 downward on both fork legs.

Note

The dust boots should remove dust and coarse dirt particles from the inner fork tubes. Over time, dirt can accumulate behind the dust boots. If this dirt is not removed, the oil seals behind can start to leak.

WARNING

Danger of accidents Oil, grease or wax on the brake discs reduces the brake action.

– Always keep the brake discs free of oil, fat and wax.
– Clean the brake discs with brake cleaner when necessary.

– Clean and oil the dust boots and inside fork tubes of both fork legs.

Universal oil spray (p. 161)

– Press the dust boots back into their installation position.
– Remove excess oil.

Reworking

– Install the fork protector. (p. 58)
– Remove the motorcycle from the lift stand. (p. 56)

11.5 Removing the fork protector

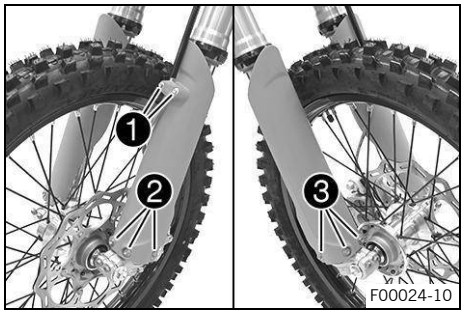

– Remove screws ❶.
– Take off the clamp.
– Remove screws ❷.
– Take off the left fork protector.
– Remove screws ❸.
– Remove the right fork protector.

11.6 Installing the fork protector

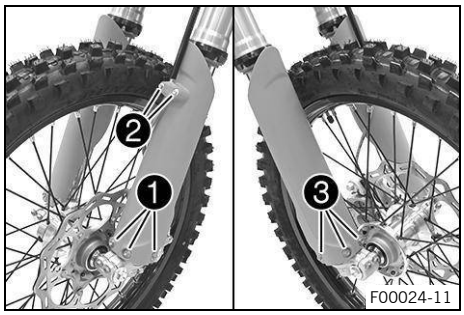

– Position the fork protector on the left fork leg. Mount and tighten screws ❶.

Remaining screws on chassis	
M6	10 Nm (7.4 ft·lb$_f$)

– Position the brake line and the clamp. Mount and tighten screws ❷.

Remaining screws on chassis	
EJOT PT® – K60×25	2 Nm (1.5 ft·lb$_f$)

– Position the fork protector on the right fork leg. Mount and tighten screws ❸.

Remaining screws on chassis	
M6	10 Nm (7.4 ft·lb$_f$)

11.7 Removing the skid plate (All XC models)

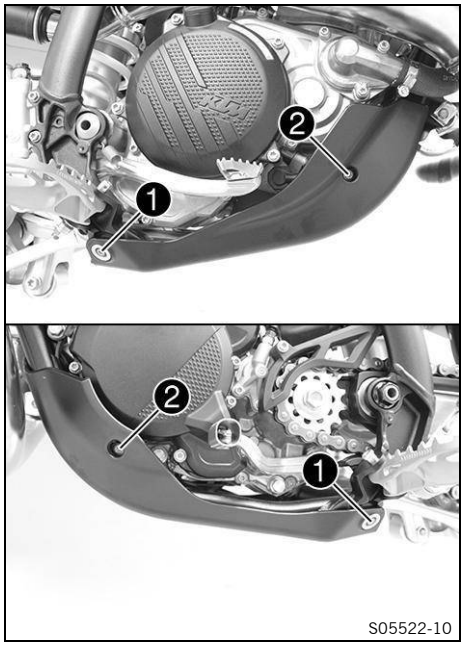

- Remove screws ❶ and bushings.
- Remove screws ❷.
- Take off the skid plate.

11.8 Installing the skid plate (All XC models)

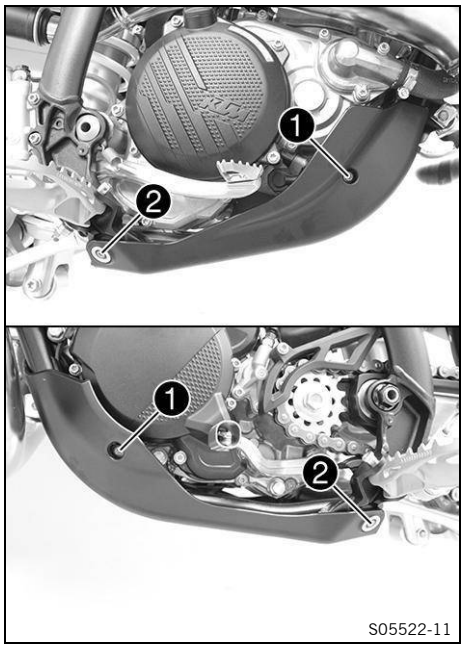

- Position the skid plate on the frame.
- Mount screws ❶, but do not tighten yet.

Remaining screws on chassis	
M6	10 Nm (7.4 ft·lb$_f$)

- Mount screws ❷ with bushings, but do not tighten yet.

Remaining screws on chassis	
M6	10 Nm (7.4 ft·lb$_f$)

✓ The skid plate is directed evenly toward the front.

- Tighten all the screws of the skid plate.

11.9 Removing the frame protector

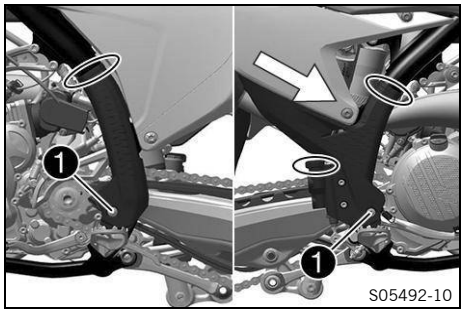

- Remove the cable ties.
- Remove screws ❶ and bushings.
- Take off the left frame protector.
- Push the right frame protector to the front and take off at the bottom.

11.10 Installing the frame protector

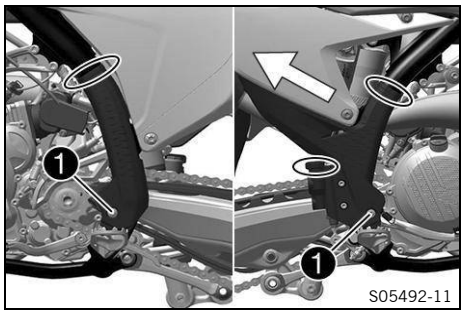

- Position the left frame protector.
- Insert the right frame protector from below and push it to the rear.
- Mount screw ❶ and bushing and tighten.

Screw, frame protector	
M5×10	3 Nm (2.2 ft·lb$_f$)

- Secure the frame protector with cable ties.

Turn the head of the cable tie so far back that it does not touch any other components.

11.11 Removing the fork legs

Preparatory work

- Raise the motorcycle with a lift stand. (p. 56)
- Remove the front wheel. (p. 104)

Main work

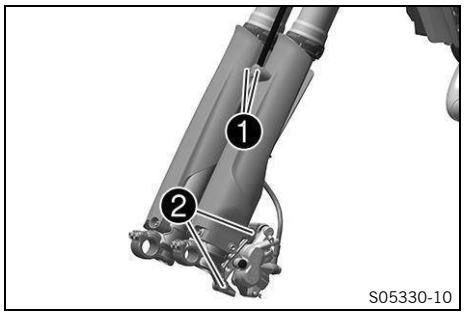

- Remove screw ❶ and take off the clamp.
- Remove screws ❷ and take off the brake caliper.
- Allow the brake caliper and the brake line to hang loosely to the side.

Do not actuate the hand brake lever when the front wheel is removed.

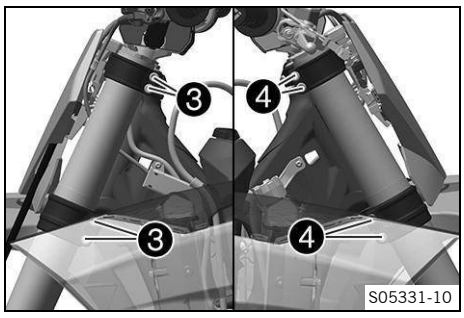

– Loosen screws ❸. Remove the left fork leg.
– Loosen screws ❹. Remove the right fork leg.

11.12 Installing the fork legs

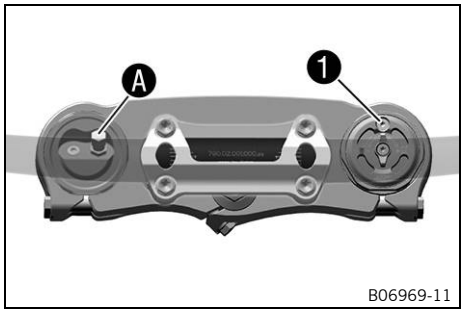

Main work
(All SX models)

– Position the fork legs.
  ✓ Air bleeder screw ❶ of the right fork leg is positioned to the front.
  ✓ Valve Ⓐ of the left fork leg faces the front.

Note
Grooves are milled into the side of the upper end of the fork legs. The second milled groove (from the top) must be flush with the upper edge of the upper triple clamp.
The air suspension is located in the left fork leg. The pressure and rebound damping is located in the right fork leg.

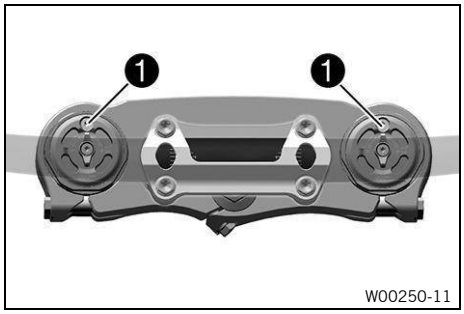

(All XC models)

– Position the fork legs.
  ✓ Bleeder screws ❶ of the fork legs are positioned toward the front.

Note
Grooves are milled into the side of the upper end of the fork legs. The second milled groove (from the top) must be flush with the upper edge of the upper triple clamp.
The pressure and rebound damping is located in the left and right fork leg.

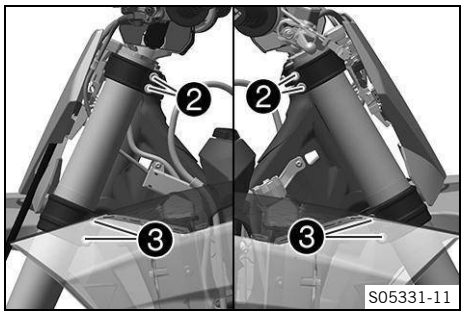

– Tighten screws ❷.

Screw, top triple clamp	
M8×40	17 Nm (12.5 ft·lb$_f$)

– Tighten screws ❸.

Screw, bottom triple clamp	
M8×50	12 Nm (8.9 ft·lb$_f$)

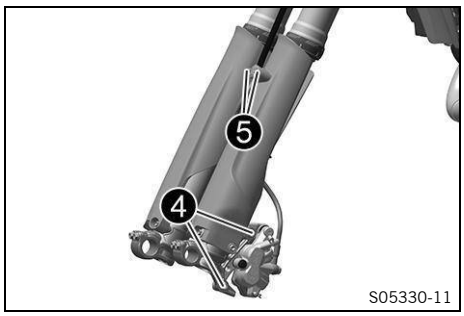

– Position the brake caliper. Mount and tighten screws ❹.

Screw, front brake caliper	
M8×30	25 Nm (18.4 ft·lb$_f$) **Loctite® 243**

– Position the brake line and the clamp. Mount and tighten screws ❺.

Remaining screws on chassis	
EJOT PT® – K60×25	2 Nm (1.5 ft·lb$_f$)

Reworking

– Install the front wheel. (p. 105)

11.13 Removing the lower triple clamp

Preparatory work

– Raise the motorcycle with a lift stand. (p. 56)
– Remove the front wheel. (p. 104)
– Remove the fork legs. (p. 60)
– Remove the number plate. (p. 67)
– Remove the front top fender. (p. 68)
– Remove the handlebar pad.

Main work

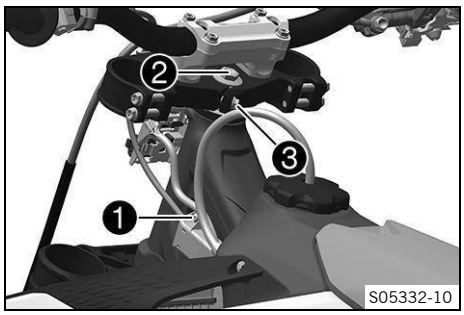

– Remove screw ❶.
– Detach the wiring harness.
– Remove screw ❷.
– Remove screw ❸.
– Take off the upper triple clamp with the handlebar and place to one side.

Protect the components against damage by covering them.
Do not kink the cables or lines.

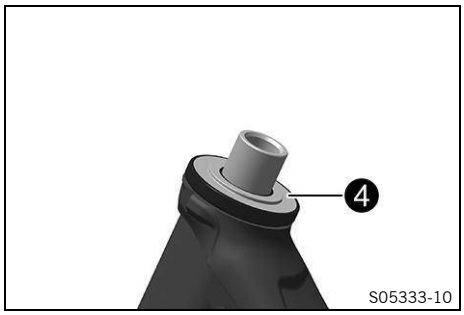

– Remove steering head seal ❹.
– Remove the steering stem from the lower triple clamp.
– Remove the upper steering head bearing.

11.14 Installing the lower triple clamp

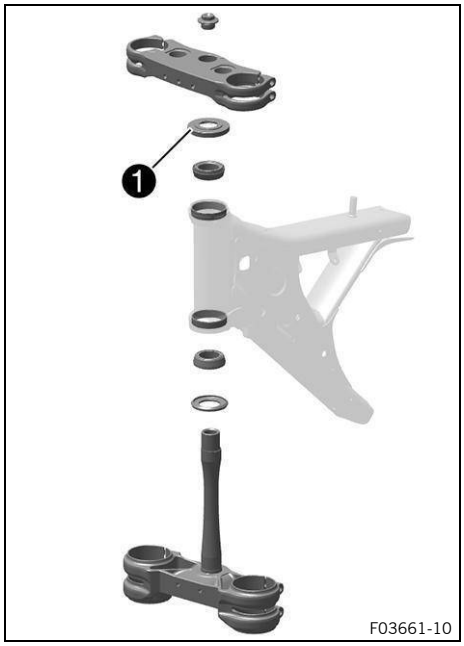

Main work

– Clean the bearing and sealing elements, check for damage, and grease.

High viscosity grease (p. 162)

– Insert the lower triple clamp with the steering stem. Mount the upper steering head bearing.
– Push on steering head seal ❶.

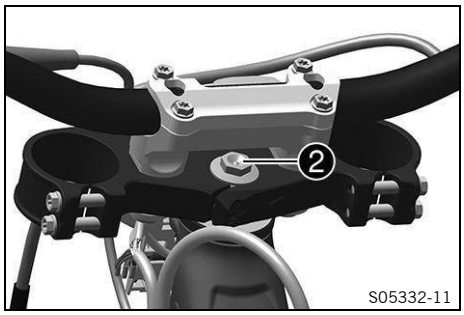

– Position the upper triple clamp and handlebar.
– Mount screw ❷, but do not tighten it yet.

Screw, top steering head	
M20×1.5	12 Nm (8.9 ft·lb$_f$)

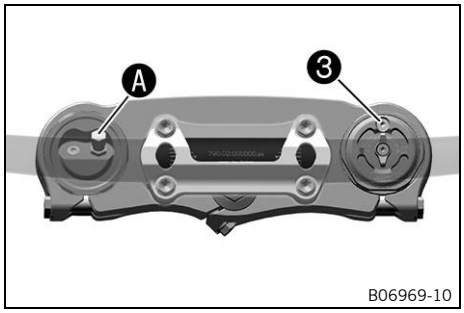

(All SX models)

– Position the fork legs.
  ✓ Air bleeder screw ❸ of the right fork leg is positioned to the front.
  ✓ Valve Ⓐ of the left fork leg faces the front.

Note

Grooves are milled into the side of the upper end of the fork legs. The second milled groove (from the top) must be flush with the upper edge of the upper triple clamp.

The air suspension is located in the left fork leg. The pressure and rebound damping is located in the right fork leg.

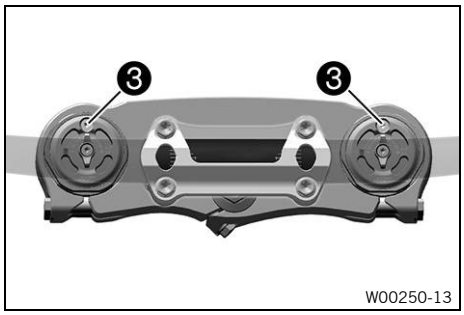

(All XC models)

– Position the fork legs.

✓ Bleeder screws ❸ of the fork legs are positioned toward the front.

Note

Grooves are milled into the side of the upper end of the fork legs. The second milled groove (from the top) must be flush with the upper edge of the upper triple clamp.

The pressure and rebound damping is located in the left and right fork leg.

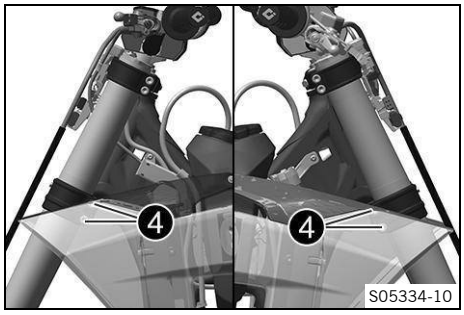

– Tighten screws ❹.

Screw, bottom triple clamp	
M8×50	12 Nm (8.9 ft·lb$_f$)

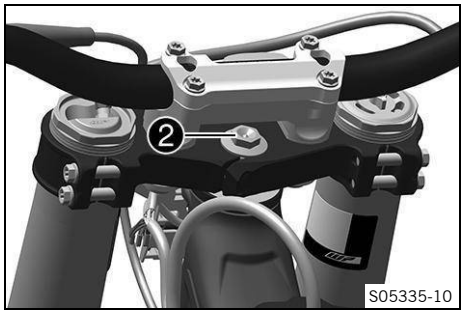

– Tighten screw ❷.

Screw, top steering head	
M20×1.5	12 Nm (8.9 ft·lb$_f$)

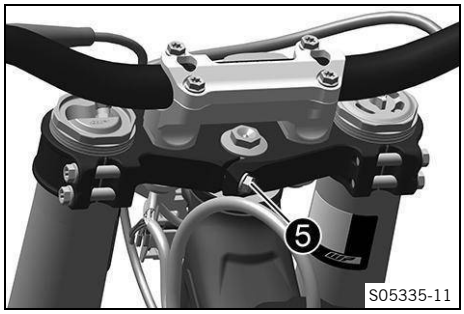

– Mount and tighten screw ❺.

Screw, upper steering stem	
M8×25	20 Nm (14.8 ft·lb$_f$) **Loctite® 243**

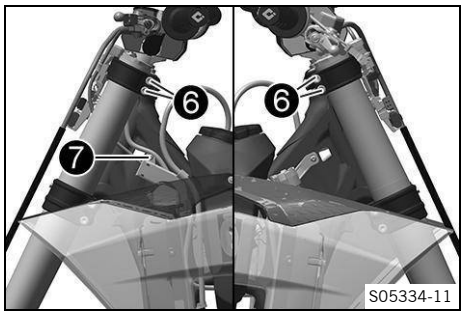

– Using a plastic hammer, tap lightly on the upper triple clamp to avoid stresses.

– Tighten screws ❻.

Screw, top triple clamp	
M8×40	17 Nm (12.5 ft·lb$_f$)

– Secure the wiring harness with the left cable bracket. Mount and tighten screw ❼.

Remaining screws on chassis	
M5	5 Nm (3.7 ft·lb$_f$)

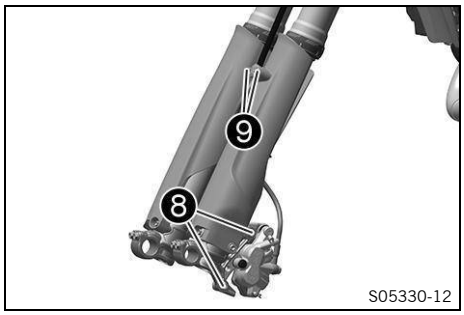

– Position the brake caliper. Mount and tighten screws ❽.

Screw, front brake caliper	
M8×30	25 Nm (18.4 ft·lb$_f$) **Loctite® 243**

– Position the brake line and the clamp. Mount and tighten screws ❾.

Remaining screws on chassis	
EJOT PT® – K60×25	2 Nm (1.5 ft·lb$_f$)

Reworking

– Install the front top fender. (p. 68)
– Mount the handlebar pad.
– Mount the number plate. (p. 67)
– Install the front wheel. (p. 105)
– Check the wiring harness, cables, and brake and clutch lines for freedom of movement and correct routing.
– Check the steering head bearing play. (p. 65)
– Remove the motorcycle from the lift stand. (p. 56)

11.15 Checking the steering head bearing play

WARNING

Danger of accidents Incorrect steering head bearing play can impair the handling characteristic and damage components.

– Correct incorrect steering head bearing play immediately.

Note

If the vehicle is operated for a lengthy period with play in the steering head bearing, the bearings and the bearing seats in the frame can become damaged.

Preparatory work

– Raise the motorcycle with a lift stand. (p. 56)

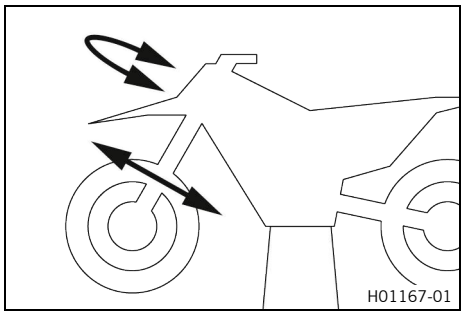

Main work

– Move the handlebar to the straight-ahead position. Move the fork legs to and fro in the direction of travel.

Play should not be detectable on the steering head bearing.

» If there is detectable play:
  – Adjust the steering head bearing play. (p. 66)

– Move the handlebar back and forth over the entire steering range.

It must be possible to move the handlebar easily over the entire steering range. There should be no detectable detent positions.

» If detent positions are detected:
  – Adjust the steering head bearing play. (p. 66)
  – Check the steering head bearing and adjust if necessary.

Reworking

– Remove the motorcycle from the lift stand. (p. 56)

11.16 Adjusting the steering head bearing play

Preparatory work

– Raise the motorcycle with a lift stand. (p. 56)
– Remove the handlebar pad.

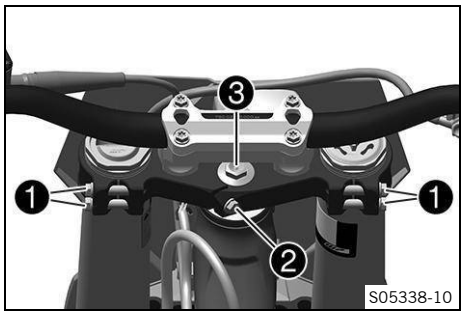

Main work

– Loosen screws ❶.
– Remove screw ❷.
– Loosen and retighten screw ❸.

Screw, top steering head	
M20×1.5	12 Nm (8.9 ft·lb$_f$)

– Using a plastic hammer, tap lightly on the upper triple clamp to avoid stresses.
– Tighten screws ❶.

Screw, top triple clamp	
M8×40	17 Nm (12.5 ft·lb$_f$)

– Mount and tighten screw ❷.

Screw, upper steering stem	
M8×25	20 Nm (14.8 ft·lb$_f$) **Loctite® 243**

Reworking

- Check the steering head bearing play. (p. 65)
- Remove the motorcycle from the lift stand. (p. 56)
- Mount the handlebar pad.

11.17 Lubricating the steering head bearing

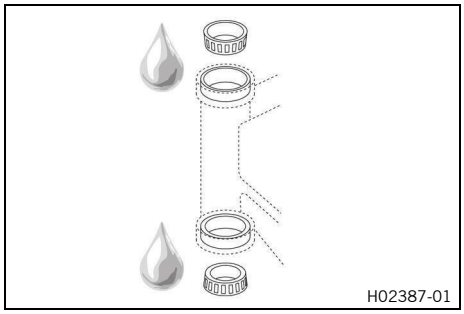

- Remove the lower triple clamp. (p. 62)
- Install the lower triple clamp. (p. 63)

Note
The steering head bearing is cleaned and lubricated in the course of removal and installation of the lower triple clamp.

11.18 Removing the number plate

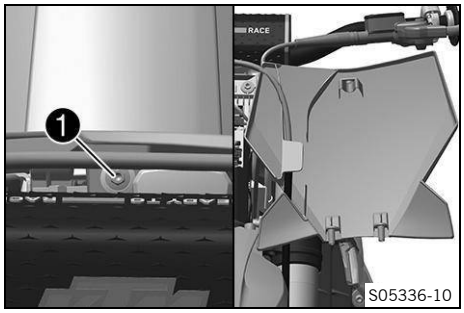

- Remove screw 1.
- Unhook the number plate from the brake line and remove it.

11.19 Mounting the number plate

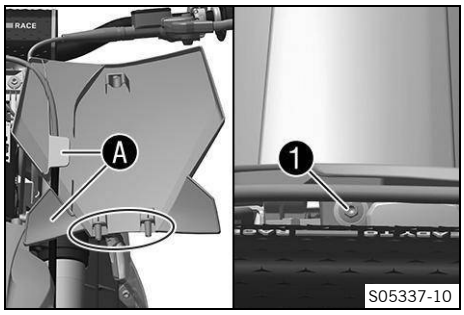

- Position the brake line in holders A on the number plate.
- Position the number plate. Mount and tighten screw 1.

Remaining screws on chassis	
EJOT PT®	2 Nm (1.5 ft·lb$_f$)

✓ The holding lugs engage in the fender.

11.20 Removing the front top fender

Preparatory work

– Remove the number plate. (p. 67)

Main work

– Remove screws ❶ and ❷. Remove the front fender.

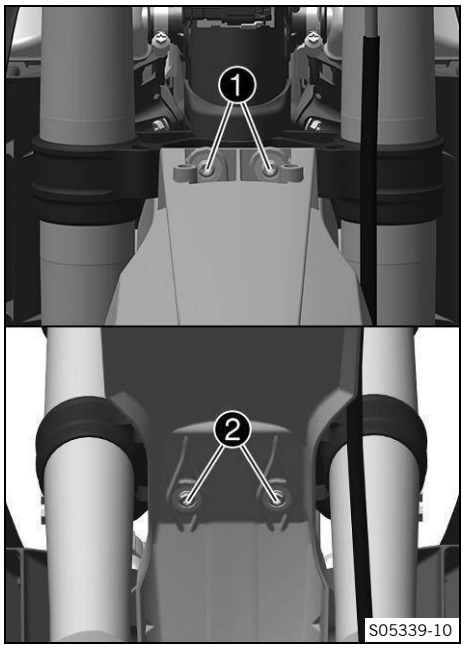

11.21 Installing the front top fender

Main work

– Position the front fender. Mount and tighten screws ❶ and ❷.

Screw, fender	
M6×16	12 Nm (8.9 ft·lb$_f$)

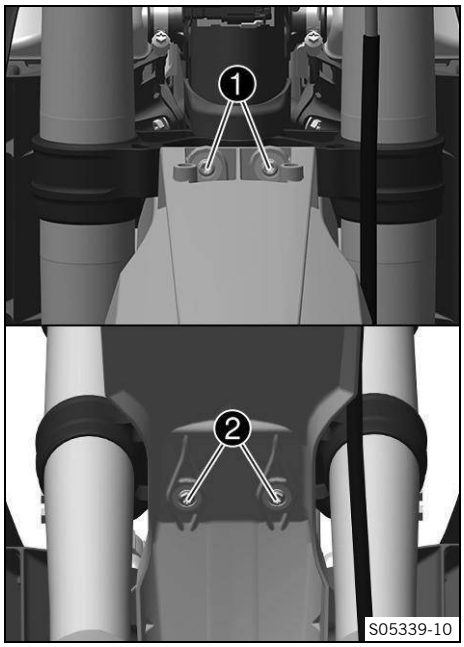

Reworking

– Mount the number plate. (p. 67)

11.22 Removing the shock absorber

Preparatory work

– Raise the motorcycle with a lift stand. (p. 56)
– Remove the frame protector. (p. 60)
– Remove the muffler. (p. 77)

Main work

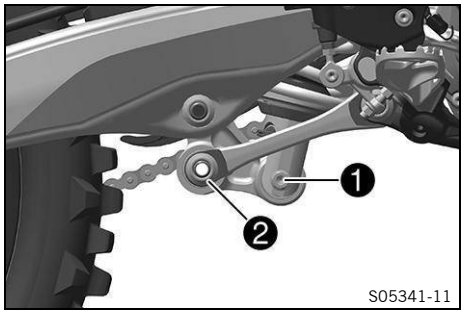

– Remove screw ❶.
– Remove fitting ❷.

> **Tip**
> Raise the swingarm slightly to be able to remove the screws more easily.

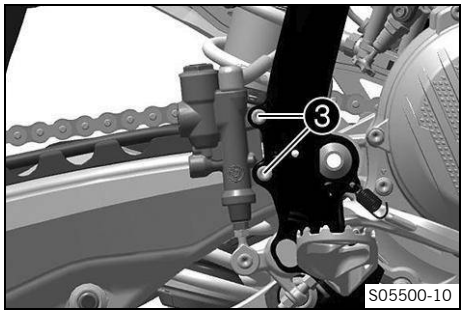

– Remove screws ❸.
– Pull brake cylinder off of the push rod.

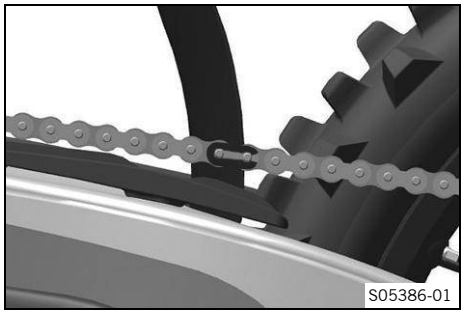

– Remove the connecting link on the chain.
– Take off the chain.

Protect the components against damage by covering them.

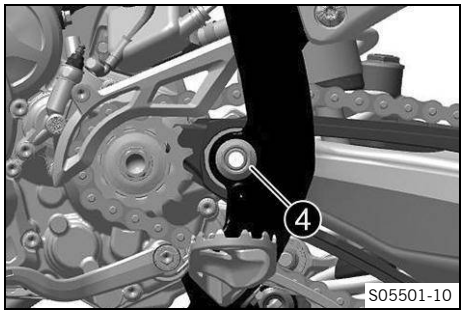

– Remove nut ❹ and the swingarm pivot.
– Push the swingarm back and secure it against falling over.

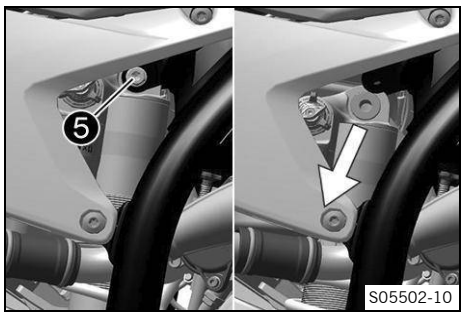

– Hold the shock absorber and remove screw ❺.
– Remove the shock absorber carefully at the bottom.

11.23 Installing the shock absorber

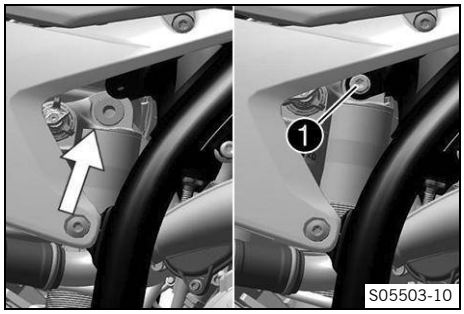

Main work

– Carefully position the shock absorber into the vehicle from the bottom.
– Mount and tighten screw ❶.

Top shock absorber screw	
M10×52	60 Nm (44.3 ft·lb$_f$) **Loctite® 2701**

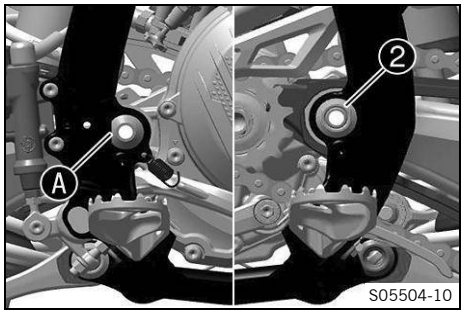

– Position the swingarm and fit the swingarm pivot.

Pay attention to flat area Ⓐ.

– Mount and tighten nut ❷.

Nut, swingarm pivot	
M16×1.5	100 Nm (73.8 ft·lb$_f$)

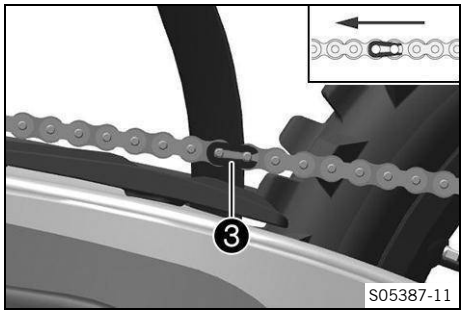

– Mount the chain.
– Connect the chain with connecting link ❸.

The closed side of the master link clip must face in the direction of travel.

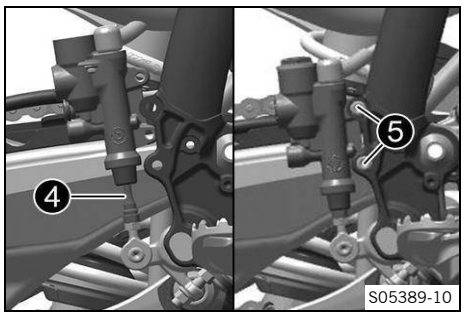

– Position the brake cylinder.

Ensure that the dust boot is properly seated.

✓ Push rod ❹ engages in the brake cylinder.

– Mount and tighten screws ❺.

Remaining screws on chassis	
M6	10 Nm (7.4 ft·lb$_f$)

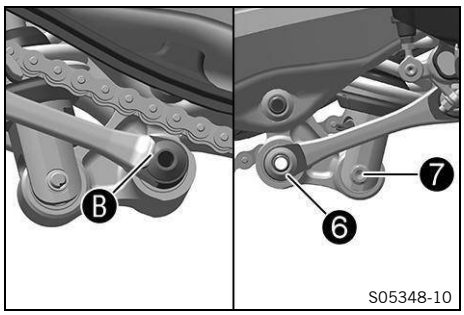

– Position the power valve control lever and linkage lever.
– Mount and tighten screw connection ❻.

Pay attention to flat area Ⓑ.

Nut, linkage lever on angle lever	
M16×1.5	80 Nm (59.0 ft·lb$_f$)

– Mount and tighten screw ❼.

Bottom shock absorber screw	
M10×52	60 Nm (44.3 ft·lb$_f$) **Loctite® 2701**

Tip
Raise the swingarm slightly to be able to mount the screw more easily.

Reworking

– Check the free travel of the brake pedal. (p. 98)
– Install the muffler. (p. 77)
– Install the frame protector. (p. 60)
– Remove the motorcycle from the lift stand. (p. 56)

11.24 Removing the seat

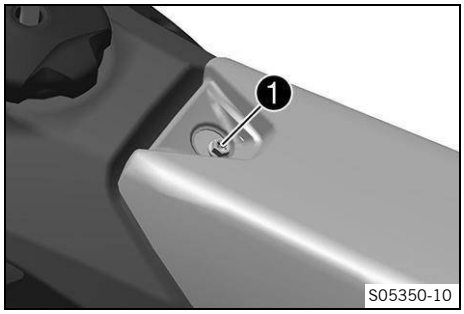

– Remove screw ❶.

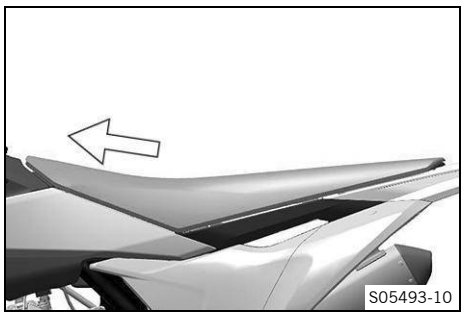

– Raise seat, pull it toward the fuel tank and take it off.

11.25 Mounting the seat

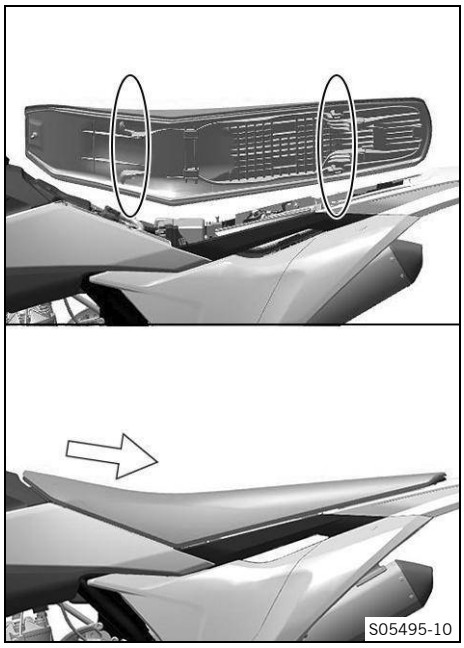

– Attach the seat to the collar bushings at the front and simultaneously push it back.
  ✓ The holding lugs engage in the recesses at the back.
– Make sure the seat is latched in place correctly.

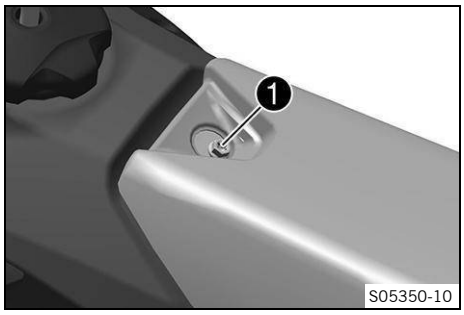

– Mount and tighten screw ❶.

Screw, seat installation	
M6×25	8 Nm (5.9 ft·lb$_f$)

11.26 Removing air filter box cover

Condition: Air filter box cover secured

– Remove screw 1.

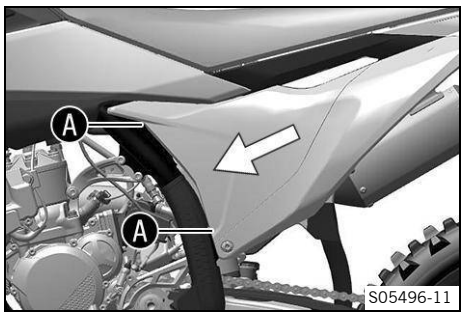

– Pull off the air filter box cover in areas A and push it sideways and forward. Take off the air filter box cover.

Condition: Air filter box cover not secured

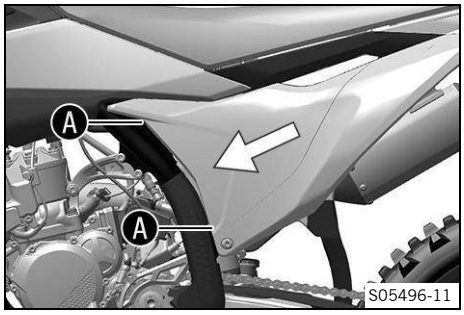

– Pull off the air filter box cover in areas A and push it sideways and forward. Take off the air filter box cover.

11.27 Installing air filter box cover

Condition: Air filter box cover secured

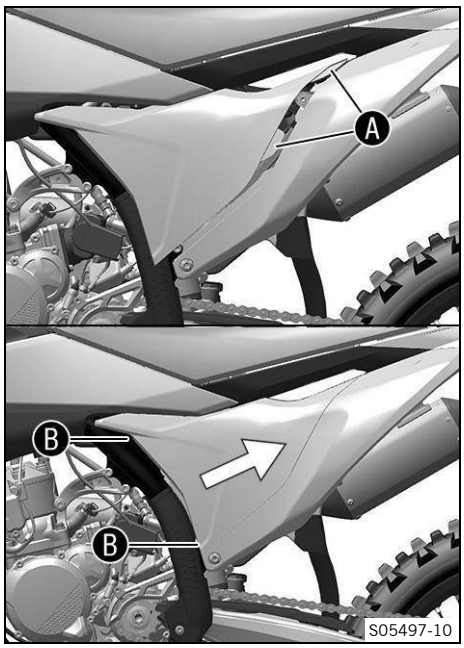

– Attach the air filter box cover in areas A and clip in areas B.

– Mount and tighten screw 1.

Screw, air filter box cover	
EJOT PT®	3 Nm (2.2 ft·lb_f)

Condition: Air filter box cover not secured

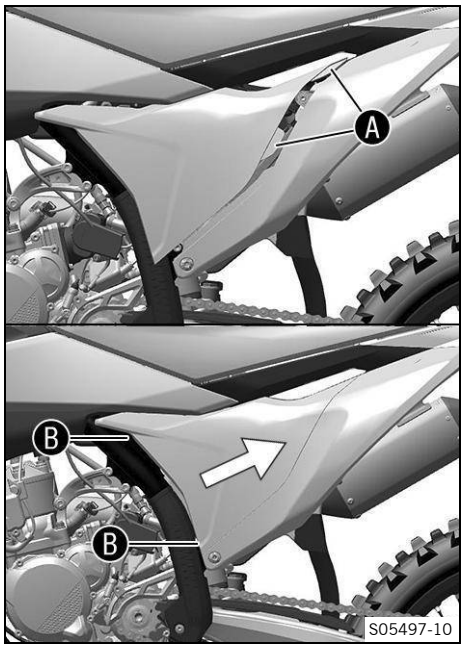

– Attach the air filter box cover in areas A and clip in areas B.

11.28 Removing the air filter

NOTE

Engine failure Unfiltered intake air has a negative effect on the service life of the engine.
Dust and dirt can enter the engine if there is no air filter or if the air filter is mounted incorrectly.

– Only operate the vehicle if an air filter is correctly fitted.

NOTE

Environmental hazard Hazardous substances cause environmental damage.

– Dispose of oils, grease, filters, fuel, cleaning agents, brake fluid, etc. correctly and in accordance with the applicable regulations.

Preparatory work

– Remove air filter box cover. (p. 73)

Main work

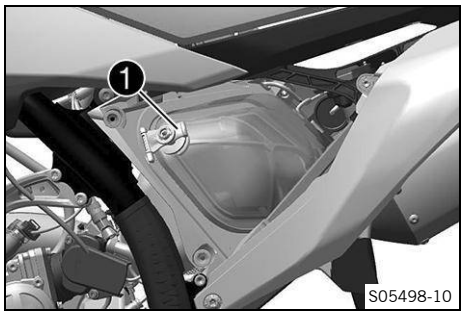

– Detach tab 1. Remove air filter with air filter support.
– Remove air filter with air filter support.
– Remove the air filter with the air filter support.

11.29 Cleaning the air filter and air filter box

NOTE

Environmental hazard Hazardous substances cause environmental damage.

– Dispose of oils, grease, filters, fuel, cleaning agents, brake fluid, etc. correctly and in accordance with the applicable regulations.

Preparatory work

– Remove air filter box cover. (p. 73)
– Remove the air filter. (p. 75)

Main work

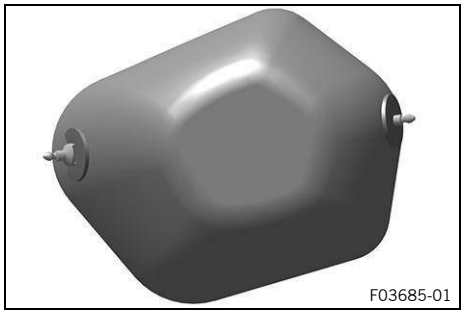

– Wash the air filter thoroughly in special cleaning liquid and allow it to dry properly.

Do not clean the air filter with fuel or petroleum as these substances will damage the foam rubber.
Only press the air filter to dry it, do not wring it out.

Air filter cleaning agent (p. 164)

– Oil the dry air filter with a high-grade air filter oil.

Oil for foam air filter (p. 162)

– Clean the air filter box.
– Clean the intake flange and check it for damage and that it is firmly seated.

Reworking

– Install the air filter. (p. 76)
– Install the air filter box cover. (p. 73)

11.30 Installing the air filter

Main work

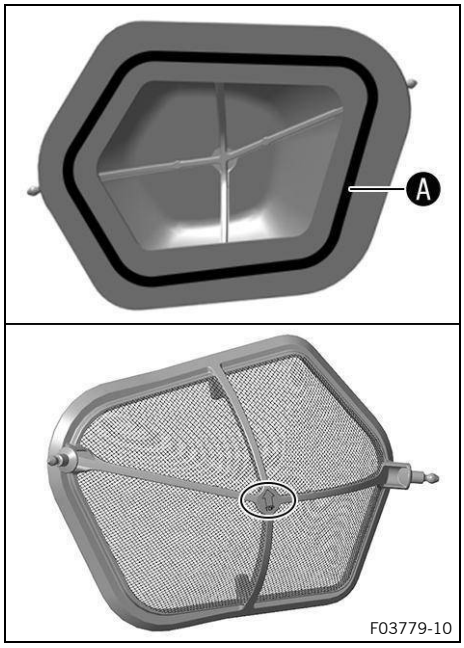

– Mount the clean air filter on the air filter support.

The marking on the air filter support must face upwards.

– Grease the air filter in area A.

Long-life grease (p. 161)

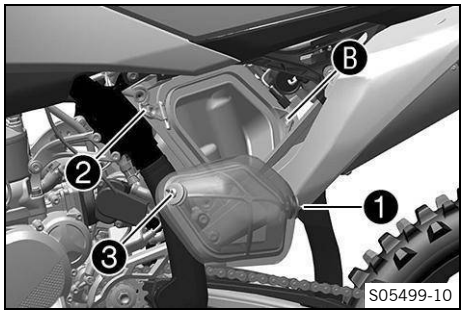

– Insert air filter and position retaining pin 1 in bushing B.

The marking on the air filter must face upwards.

✓ The air filter is correctly positioned.

– Attach tab 2.

✓ Retaining pin 3 is secured by tab 2.

Note
If the air filter is not mounted correctly, dust and dirt may enter the engine and result in damage.

Reworking

– Install the air filter box cover. (p. 73)

11.31 Preparing the air filter box cover for securing

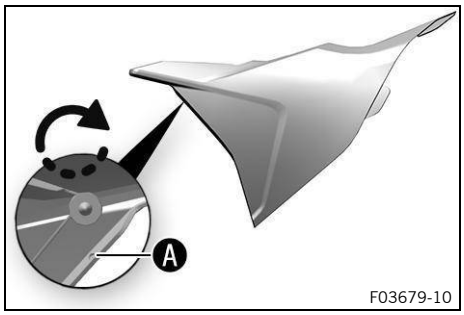

Preparatory work

– Remove air filter box cover. (p. 73)

Main work

– Drill a hole at marking A.

Diameter	6 mm (0.24 in)

Reworking

– Install the air filter box cover. (p. 73)

11.32 Removing the muffler

WARNING

Danger of burns The exhaust system gets hot when the vehicle is driven.

– Allow the exhaust system to cool down before performing any work on the vehicle.

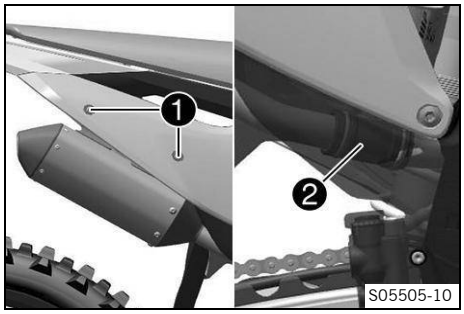

– Remove screws 1 with the washers.
– Pull off the main silencer from the manifold at exhaust sleeve 2.

11.33 Installing muffler

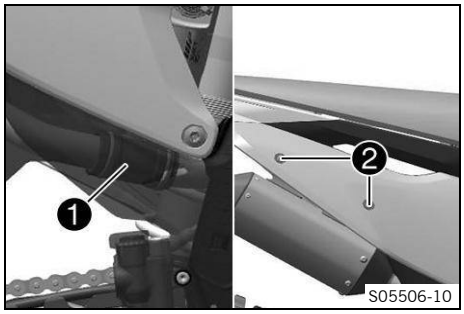

– Position the main silencer in exhaust sleeve 1.
– Mount and tighten screws 2 with the washers.

Remaining screws on chassis	
M6	10 Nm (7.4 ft·lb$_f$)

11.34 Changing the damping material on the main silencer

WARNING

Danger of burns The exhaust system gets hot when the vehicle is driven.

– Allow the exhaust system to cool down before performing any work on the vehicle.

Note

Over time, the fibers of the damping wool escape into the air, and the muffler "burns out".
Not only does this make the noise level higher, but the performance characteristics also change.

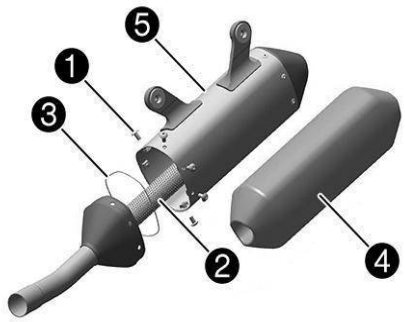

S05515-10

Preparatory work

– Remove the muffler. (p. 77)

Main work

– Remove screws ❶. Pull out inner tube ❷ with O-ring ❸.
– Pull damping material ❹ off the inner tube.
– Clean the parts that need to be reinstalled and check for damage.
– Mount new damping material ❹ on the inner tube.
– Mount O-ring ❸ on inner tube ❷.
– Slide outer tube ❺ over the inner tube with the new damping material.
– Mount and tighten all screws ❶.

Remaining screws on chassis	
M5	5 Nm (3.7 ft·lb_f)

Reworking

– Install the muffler. (p. 77)

11.35 Removing the fuel tank

DANGER

Fire hazard Fuel is highly flammable.

The fuel in the fuel tank expands when warm and can escape if overfilled.

– Do not refuel the vehicle in the vicinity of open flames, glowing, or smoldering objects.
– Make sure that nobody smokes in the vicinity of the vehicle during the refueling process.
– Switch off the engine for refueling.
– Make sure that no fuel is spilled; particularly not on hot parts of the vehicle.
– If any fuel is spilled, wipe it up immediately.
– Do not overfill the fuel tank.

WARNING

Danger of poisoning Fuel is harmful to health.

- Do not allow fuel to come into contact with skin, eyes, or clothing.
- Consult a doctor immediately if fuel has been ingested.
- Do not inhale fuel vapors.
- Rinse the affected area immediately with plenty of water in the event of contact with skin.
- Rinse eyes thoroughly with water and consult a doctor immediately if fuel comes into contact with eyes.
- If fuel spills on to your clothing, change the clothing.
- Store fuel properly in a suitable container and keep out of the reach of children.

Preparatory work

- Remove the seat. (p. 71)

Main work

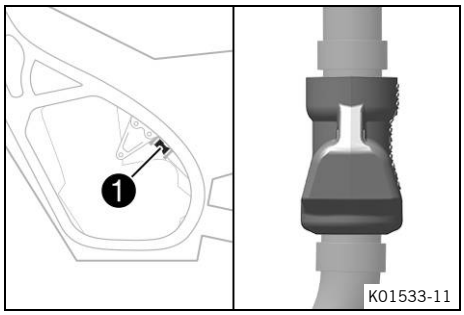

- Remove protection cap 1 of the fuel line.

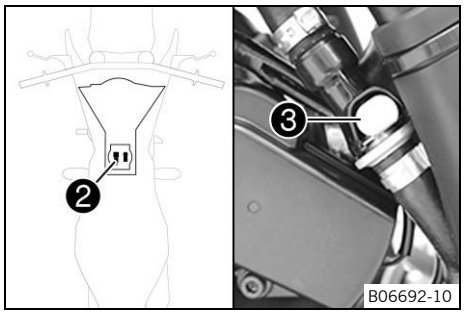

- Unplug socket connector 2 of the fuel pump.
- Clean quick-lock coupling 3 thoroughly with compressed air.

Dirt must not enter into the fuel line. Dirt in the fuel line clogs the injector!

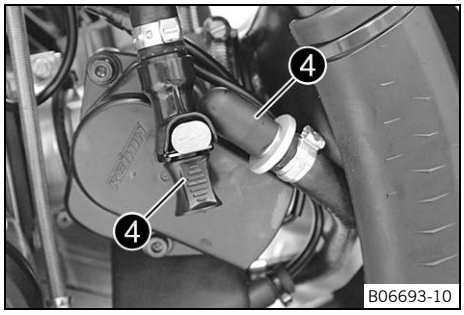

- Disconnect the quick-lock coupling.

Note
Remaining fuel may flow out of the fuel hose.

- Mount wash cap set 4.

Wash cap set (81212016100)

- Pull the fuel tank vent hose off the fuel tank cap.

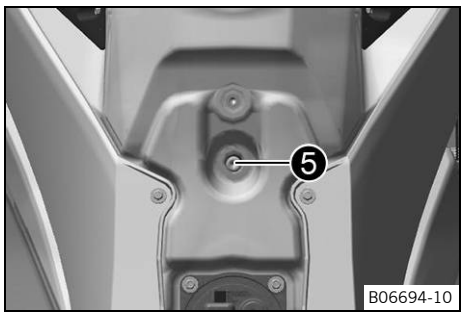

– Remove screw ❺ with the rubber bushing.

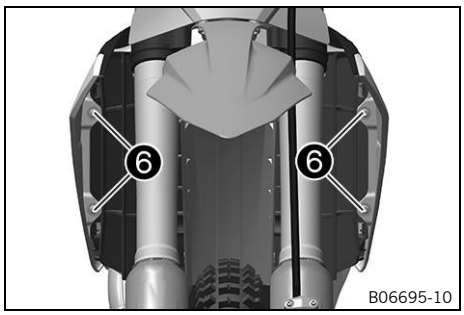

– Remove screws ❻ with collar bushings.

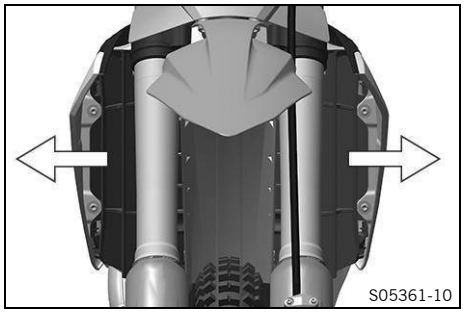

– Pull both spoilers laterally off the radiator and lift off the fuel tank.

11.36 Installing the fuel tank

DANGER

Fire hazard Fuel is highly flammable.

The fuel in the fuel tank expands when warm and can escape if overfilled.

- Do not refuel the vehicle in the vicinity of open flames, glowing, or smoldering objects.
- Make sure that nobody smokes in the vicinity of the vehicle during the refueling process.
- Switch off the engine for refueling.
- Make sure that no fuel is spilled; particularly not on hot parts of the vehicle.
- If any fuel is spilled, wipe it up immediately.
- Do not overfill the fuel tank.

WARNING

Danger of poisoning Fuel is harmful to health.

- Do not allow fuel to come into contact with skin, eyes, or clothing.
- Consult a doctor immediately if fuel has been ingested.
- Do not inhale fuel vapors.
- Rinse the affected area immediately with plenty of water in the event of contact with skin.
- Rinse eyes thoroughly with water and consult a doctor immediately if fuel comes into contact with eyes.
- If fuel spills on to your clothing, change the clothing.
- Store fuel properly in a suitable container and keep out of the reach of children.

Main work

– Check the throttle cable routing. (p. 87)

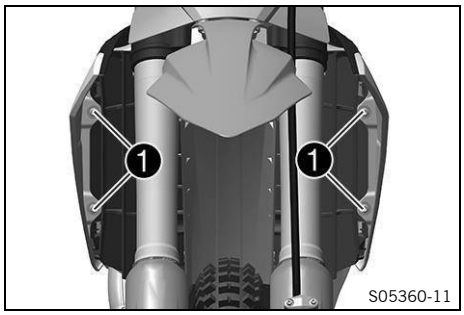

– Position the fuel tank and fit both spoilers to the side of the radiator.

Make sure that no wires or cables are trapped or damaged.

– Attach the fuel tank vent hose to the fuel tank cap.
– Mount and tighten screws ❶ with the collar bushings.

Screw, fuel tank spoiler on radiator	
M6	6 Nm (4.4 ft·lb$_f$)

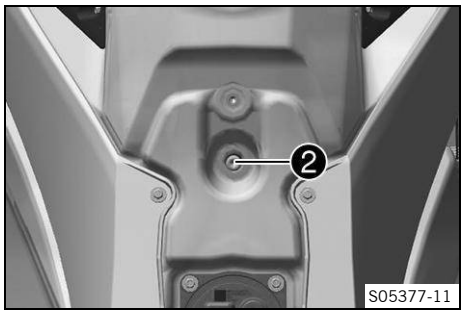

– Mount and tighten screw ❷ with the rubber bushing.

Remaining screws on chassis	
M6	10 Nm (7.4 ft·lb$_f$)

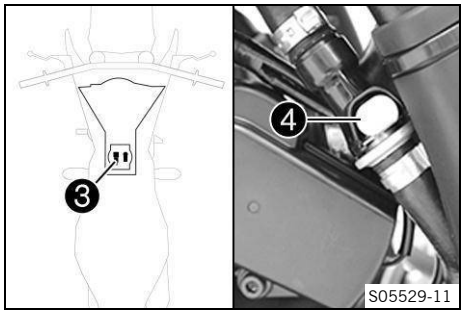

– Plug in fuel pump socket connector ❸.
– Remove the wash cap set and thoroughly clean the quick-lock coupling using compressed air.

Dirt must not enter into the fuel line. Dirt in the fuel line clogs the injector!

– Spray silicone spray onto a lint-free cleaning cloth and lightly lubricate the O-ring of the quick-lock coupling.

Silicone spray (p. 162)

– Join quick-lock coupling ❹ of the fuel line.

Route the wire and fuel line at a safe distance from the exhaust system.

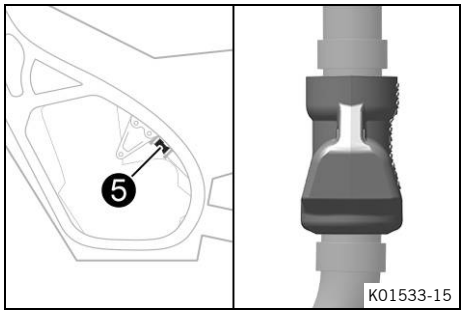

– Mount protection cap ❺ of the fuel line.

Reworking

– Mount the seat. (p. 72)

11.37 Checking the chain for dirt

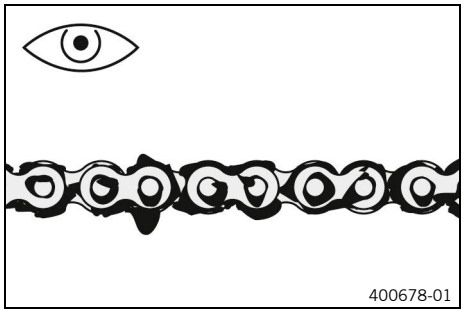

– Check the chain for coarse dirt accumulation.
  » If the chain is very dirty:
    – Clean the chain. (p. 82)

11.38 Cleaning the chain

WARNING
Danger of accidents Oil, grease or wax on the brake discs reduces the brake action.
– Always keep the brake discs free of oil, fat and wax.
– Clean the brake discs with brake cleaner when necessary.

WARNING
Danger of accidents Lubricants on the tires reduces the road grip.
– Remove lubricants from the tires using a suitable cleaning agent.

NOTE
Environmental hazard Hazardous substances cause environmental damage.
– Dispose of oils, grease, filters, fuel, cleaning agents, brake fluid, etc. correctly and in accordance with the applicable regulations.

Note
The service life of the chain depends largely on its maintenance.

Preparatory work
– Raise the motorcycle with a lift stand. (p. 56)

Main work
– Rinse off the loose dirt with a gentle jet of water.
– Remove old grease residues with a chain cleaner.

Chain cleaner (p. 164)

– After drying, apply chain spray.

Off-road chain spray (p. 161)

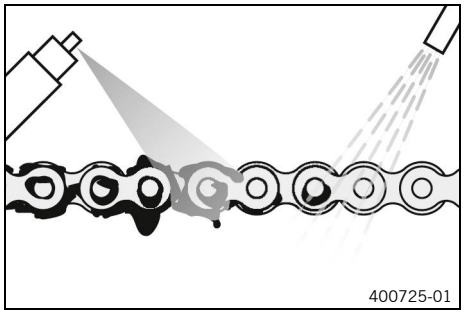

Reworking
– Remove the motorcycle from the lift stand. (p. 56)

11.39 Checking the chain tension

WARNING

Danger of accidents Incorrect chain tension can damage components and result in an accident.

If the chain is tension is too high, the chain, front sprocket, rear sprocket, transmission, and rear wheel bearings wear more quickly. Some components may break if overloaded.

If the chain is too loose, the chain may fall off the front sprocket or the rear sprocket. This can damage the rear wheel or the engine.

– Check the chain tension regularly.
– Set the chain tension in accordance with the specification.

Preparatory work

– Raise the motorcycle with a lift stand. (p. 56)

Main work

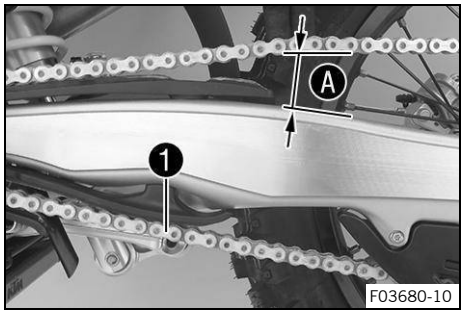

– Pull the chain at the end of the chain slider upward to measure chain tension A.

Lower chain section 1 must be taut.	
Chain tension	58 mm … 61 mm (2.28 in … 2.40 in)
Chain wear is not always even, so repeat this measurement at different positions on the chain.	

» If the chain tension does not meet the specification:
  – Adjust the chain tension. (p. 83)

Reworking

– Remove the motorcycle from the lift stand. (p. 56)

11.40 Adjusting the chain tension

WARNING

Danger of accidents Incorrect chain tension can damage components and result in an accident.

If the chain is tension is too high, the chain, front sprocket, rear sprocket, transmission, and rear wheel bearings wear more quickly. Some components may break if overloaded.

If the chain is too loose, the chain may fall off the front sprocket or the rear sprocket. This can damage the rear wheel or the engine.

– Check the chain tension regularly.
– Set the chain tension in accordance with the specification.

Preparatory work

– Raise the motorcycle with a lift stand. (p. 56)
– Check the chain tension. (p. 83)

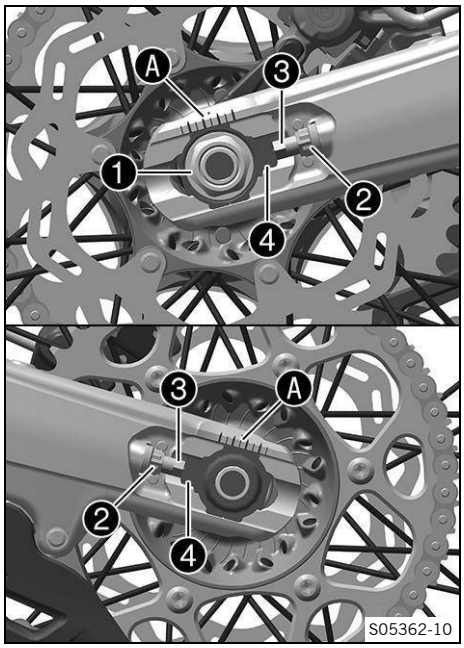

Main work

– Loosen nut ❶.
– Loosen nuts ❷.
– Adjust the chain tension by turning adjusting screws ❸ on the left and right.

Chain tension	58 mm … 61 mm (2.28 in … 2.40 in)
In order for the rear wheel to be correctly aligned, the markings on the left and right chain adjusters must be in the same position relative to reference markings Ⓐ.	

– Tighten nuts ❷.
– Make sure that chain tension adjusters ❹ are fitted correctly on adjusting screws ❸.
– Tighten nut ❶.

Nut, wheel spindle, rear	
M22×1.5	80 Nm (59.0 ft·lb_f)

Note

The wide range of adjustment of the chain tension adjusters (32 mm) enables different secondary transmissions with the same chain length.

Chain tension adjusters ❹ can be turned by 180°.

Reworking

– Remove the motorcycle from the lift stand. (p. 56)

11.41 Checking the chain, rear sprocket, front sprocket, and chain guide

Preparatory work

– Raise the motorcycle with a lift stand. (p. 56)

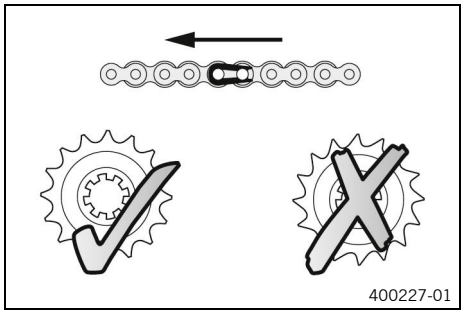

Main work

– Shift the transmission into the neutral position.
– Check the chain, rear sprocket, and front sprocket for wear.
  » If the chain, rear sprocket, or front sprocket is worn:
    – Change the drivetrain kit.

Always replace the front sprocket, rear sprocket, and chain together.

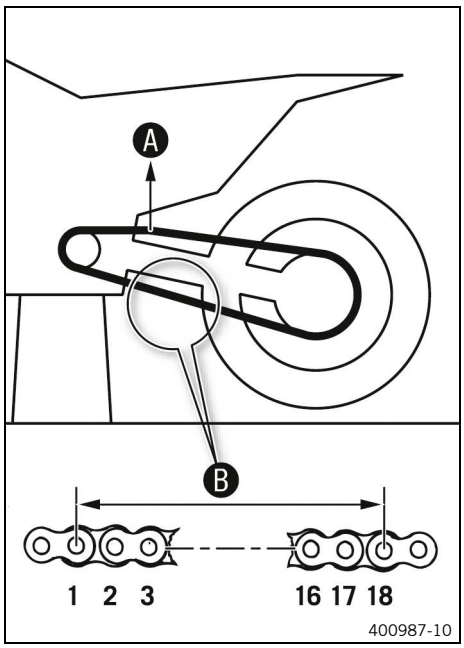

– Pull on the top section of the chain with the specified weight A.

Weight, chain wear measurement	10 kg … 15 kg (22.0 lb … 33.1 lb)

– Measure distance B of chain rollers in the lower chain section.

Maximum distance B of chain rollers at the longest chain section	272 mm (10.71 in)
Chain wear is not always even, so repeat this measurement at different positions on the chain.	

» If distance B is greater than the specified measurement:
  – Change the drivetrain kit.

When installing a new chain, also replace the rear sprocket and front sprocket.

Note
New chains wear out faster on old, worn front or rear sprockets.

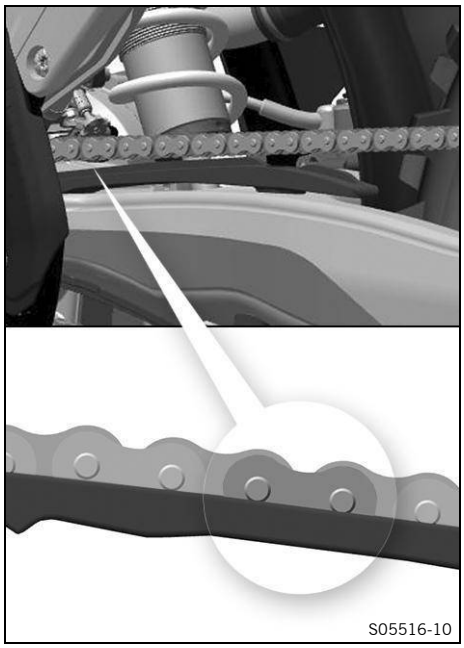

– Check the chain slider at the top for wear.
» If the lower edge of the chain pins is in line with, or below, the chain slider:
  – Change the chain slider.
– Check that the chain slider is firmly seated.
» If the chain slider is loose:
  – Tighten the screws of the chain slider.

Screw, chain slider guard	
M6×16	6 Nm (4.4 ft·lb$_f$) **Loctite® 243**

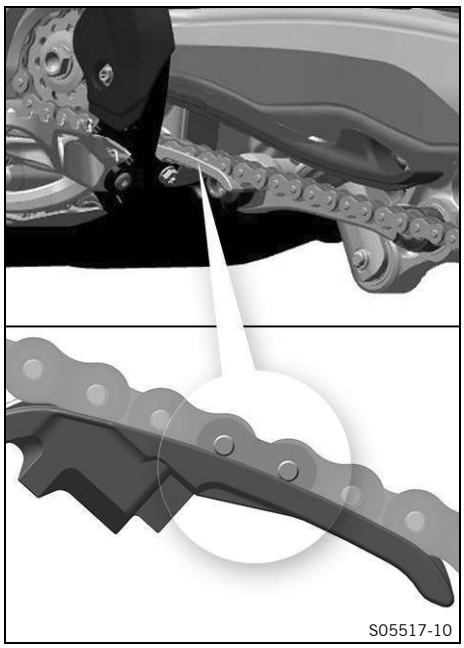

– Check the chain slider for wear.
  » If the lower edge of the chain pins is in line with or below the chain slider:
    – Change the chain slider.
– Check that the chain slider is firmly seated.
  » If the chain slider is loose:
    – Tighten the screws of the chain slider.

Screw, chain slider	
M8×20	15 Nm (11.1 ft·lb$_f$)

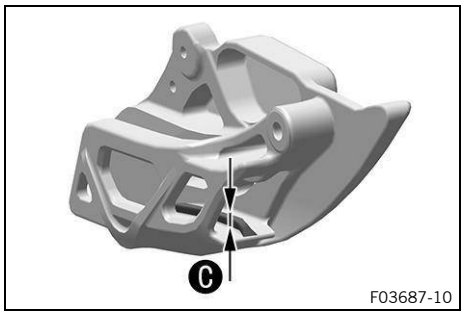

– Check the chain guide with a slide gage for dimension C.

Minimum thickness C of the chain guide	6 mm (0.24 in)

  » If the specifications have not been met:
    – Change the chain guide.

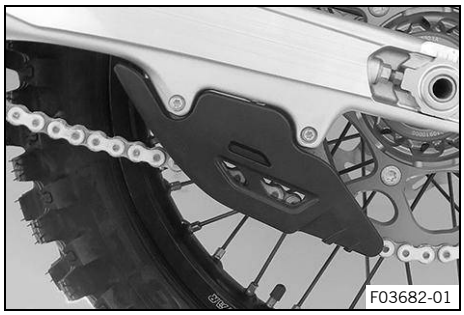

– Check that the chain guide is firmly seated.
  » If the chain guide is loose:
    – Tighten the screws on the chain guide.

Remaining screws on chassis	
M6	10 Nm (7.4 ft·lb$_f$)
Remaining nuts on chassis	
M6	10 Nm (7.4 ft·lb$_f$)

Reworking

– Remove the motorcycle from the lift stand. (p. 56)

11.42 Checking the frame

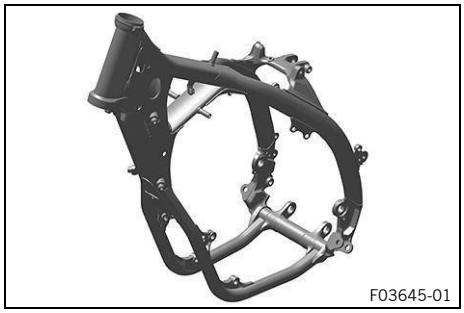
F03645-01

– Check the frame for damage, cracks, and deformation.
  » If the frame shows signs of damage, cracks, or deformation:
    – Change the frame.

    Repairs on the frame are not permitted.

11.43 Checking the swingarm

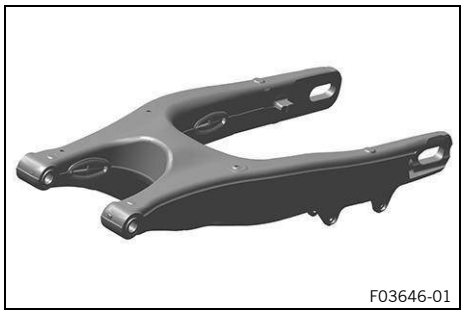
F03646-01

– Check the swingarm for damage, cracks, and deformation.
  » If the swingarm shows signs of damage, cracks, or deformation:
    – Change the swingarm.

    Repairs on the swingarm are not permitted.

11.44 Checking the throttle cable routing

WARNING

Danger of accidents The throttle cable can become kinked, jammed, or blocked if it has been routed incorrectly.

If the throttle cable is kinked, jammed or blocked, the speed can no longer be controlled.

– Make sure that the throttle cable routing and the play in the throttle cable complies with the specification.

Preparatory work

– Remove the seat. (p. 71)
– Remove the fuel tank. (p. 78)

Main work

– Check the throttle cable routing.

Both throttle cables must be routed, side by side, on the back of the handlebars, above the fuel tank bearing on the right of the frame to the throttle body. The throttle cable must be secured on the fuel tank bearing with a rubber band.

» If the throttle cable routing is not as specified:
  – Correct the throttle cable routing.

Reworking

– Install the fuel tank. (p. 80)
– Mount the seat. (p. 72)

11.45 Checking the hand grip

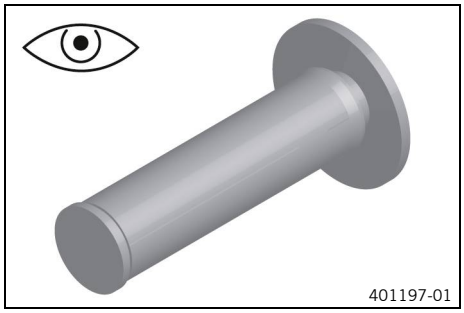

– Check the hand grips on the handlebar for damage, wear, and that they are firmly seated.

Note

The hand grips are vulcanized onto a sleeve on the left and onto the grip tube of the throttle grip on the right. The left sleeve is clamped onto the handlebar.

The hand grip can only be replaced with the sleeve or the gas pipe.

» If a hand grip is damaged or worn:
  – Replace the hand grip.

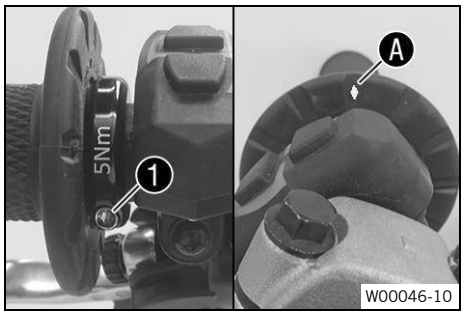

– Check that screw 1 is firmly seated.

Screw, fixed grip	
M4×12	5 Nm (3.7 ft·lb$_f$) **Loctite® 243**

Diamond A must be located at the top.

11.46 Adjusting the basic position of the clutch lever

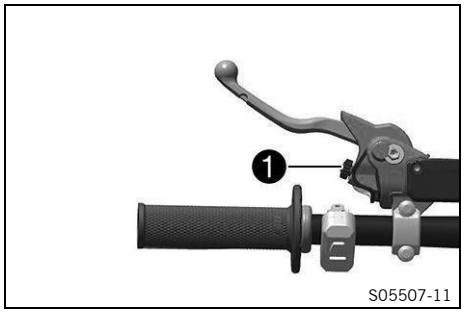

– Adjust the basic position of the clutch lever to your hand size by turning adjusting screw ❶.

Only turn the adjusting screw by hand, and do not use force.
Do not make any adjustments while riding.

Note

When the adjusting screw is turned counterclockwise, the clutch lever moves closer to the handlebar.

When the adjusting screw is turned clockwise, the clutch lever moves away from the handlebar.

The range of adjustment is limited.

11.47 Checking/correcting the fluid level of hydraulic clutch

WARNING

Health hazard Brake fluid is a harmful substance.

– Keep brake fluid out of the reach of children.
– Wear suitable protective clothing and safety glasses.
– Do not allow brake fluid to come into contact with the skin, the eyes, or clothing.
– Consult a doctor immediately if brake fluid has been ingested.
– Rinse the affected area with plenty of water in the event of contact with the skin.
– Rinse eyes thoroughly with water immediately and consult a doctor if brake fluid comes into contact with the eyes.
– If brake fluid spills on to your clothing, change the clothing.

Note

The fluid level rises with increasing wear of the friction plates.

Avoid contact between brake fluid and painted parts. Brake fluid corrodes paint.

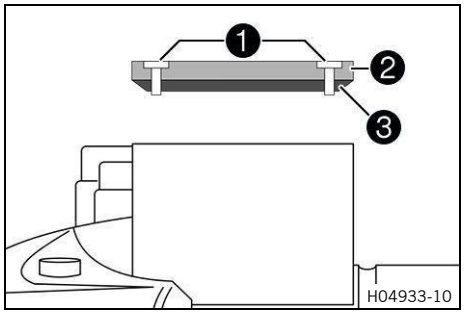

– Move the hydraulic clutch fluid reservoir mounted on the handlebar into a horizontal position.
– Remove screws ❶.
– Take off cover ❷ with diaphragm ❸.
– Check the fluid level.

Fluid level below reservoir rim	4 mm (0.16 in)

» If the fluid level does not meet the specifications:
  – Correct the fluid level of the hydraulic clutch.

Brake fluid DOT 5.1 (p. 163)

– Position the cover with diaphragm. Mount and tighten the screws.

Immediately clean up any brake fluid that has overflowed or spilled with water.

11.48 Changing the hydraulic clutch fluid

WARNING

Health hazard Brake fluid is a harmful substance.

- Keep brake fluid out of the reach of children.
- Wear suitable protective clothing and safety glasses.
- Do not allow brake fluid to come into contact with the skin, the eyes, or clothing.
- Consult a doctor immediately if brake fluid has been ingested.
- Rinse the affected area with plenty of water in the event of contact with the skin.
- Rinse eyes thoroughly with water immediately and consult a doctor if brake fluid comes into contact with the eyes.
- If brake fluid spills on to your clothing, change the clothing.

NOTE

Environmental hazard Hazardous substances cause environmental damage.

- Dispose of oils, grease, filters, fuel, cleaning agents, brake fluid, etc. correctly and in accordance with the applicable regulations.

Note

Avoid contact between brake fluid and painted parts. Brake fluid corrodes paint.

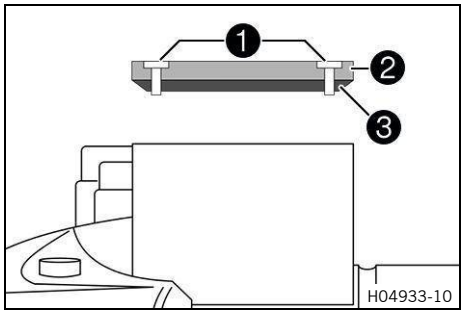

- Move the hydraulic clutch fluid reservoir mounted on the handlebar into a horizontal position.
- Remove screws ❶.
- Take off cover ❷ with diaphragm ❸.

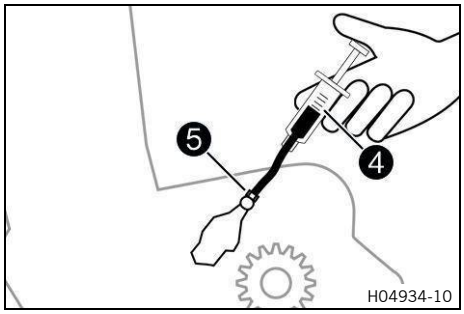

- Fill bleeding syringe ❹ with the appropriate hydraulic fluid.

Syringe (50329050000)
Brake fluid DOT 5.1 (p. 163)

- Remove the protection cap.
- On the clutch slave cylinder, remove bleeder screw ❺ and mount bleeding syringe ❹.

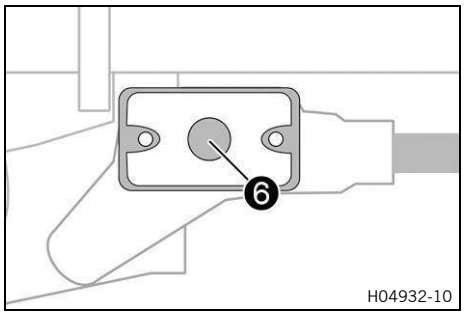

- Inject the liquid into the system until it escapes from bore ❻ of the master cylinder without bubbles.
- Occasionally extract the fluid from the master cylinder reservoir to prevent overflowing.
- Remove the bleeding syringe. Mount and tighten bleeder screw ❺.
- Mount the protection cap.
- Correct the fluid level of the hydraulic clutch.

Fluid level below reservoir rim	4 mm (0.16 in)

– Position the cover with diaphragm. Mount and tighten the screws.

Immediately clean up any brake fluid that has overflowed or spilled with water.

12.1 Checking the free travel on the hand brake lever

WARNING

Danger of accidents The brake system fails in the event of overheating.

If there is no free travel on the hand brake lever, pressure builds up on the front brake circuit.

– Check the brake system and ensure that nobody drives the vehicle before the problem is eliminated.

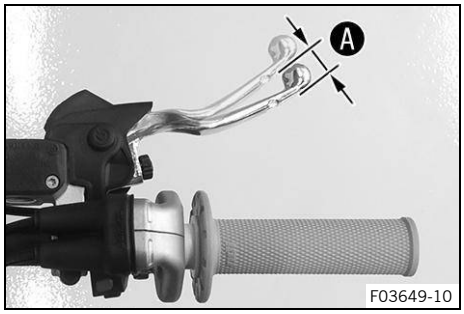

– Push the hand brake lever forward and check free travel A.

Free travel of hand brake lever	≥ 3 mm (≥ 0.12 in)

» If the free travel does not meet the specifications:

– Adjust the basic position of the hand brake lever. (p. 92)

12.2 Adjusting the basic position of the hand brake lever

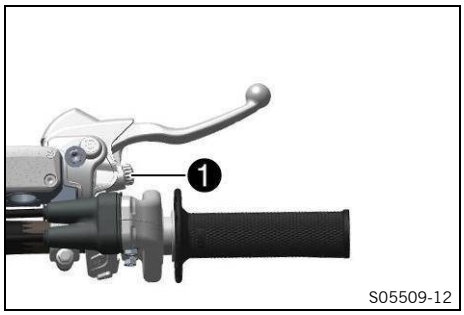

– Check the free travel on the hand brake lever. (p. 92)

– Adjust the basic position of the hand brake lever to your hand size by turning adjusting screw 1.

Only turn the adjusting screw by hand, and do not use force.
Do not make any adjustments while riding.

Note

Turn the adjusting screw clockwise to increase the distance between the hand brake lever and the handlebar.

Turn the adjusting screw counterclockwise to decrease the distance between the hand brake lever and the handlebar.

The range of adjustment is limited.

12.3 Checking the brake discs

WARNING

Danger of accidents Worn-out brake discs reduce the braking action.

– Make sure that worn-out brake discs are replaced immediately.

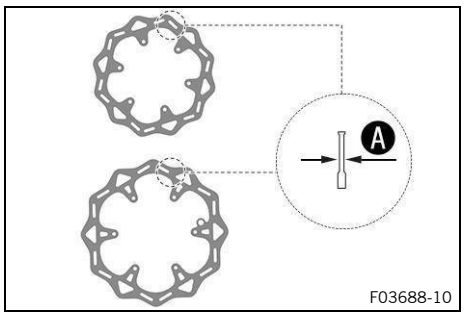

– Check the brake disc thickness of the front and rear brake disc at several places on the disc to see if they conform to measurement A.

Brake disc wear limit	
front	2.5 mm (0.098 in)
rear	3.5 mm (0.138 in)

Note
Wear reduces the thickness of the brake discs at the contact surface of the brake pads.

» If the brake disc thickness is less than the specified value:
  – Change the brake discs of the front brake.
  – Change the brake discs on the rear brake.

– Check the front and rear brake discs for damage, cracks, and deformation.
  » If the brake disc shows signs of damage, cracks, or deformation:
    – Change the brake discs of the front brake.
    – Change the brake discs on the rear brake.

12.4 Checking the brake fluid level for the front brake

WARNING
Danger of accidents Brake fluid which is too old or of the wrong type impairs the function of the brake system.
– Make sure that brake fluid for the front and rear brake is changed in accordance with the service schedule.
– Make sure that only clean, approved brake fluid from a tightly sealed container is used.

WARNING
Danger of accidents An insufficient brake fluid level will cause the brake system to fail.
If the brake fluid level drops below the specified marking or the specified value, the brake system has a leak or the brake pads are worn down.
– Have the brake system checked and make sure that the problem has been eliminated before the vehicle is used again.

Preparatory work
– Check that the brake pads of the front brake are secured. (p. 95)

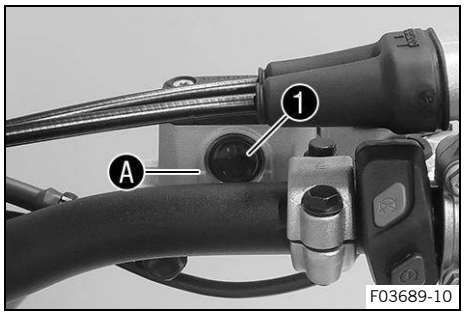

Main work

– Move the brake reservoir mounted on the handlebar to a horizontal position.
– Check the brake fluid level in sight glass 1.
  » If the brake fluid level has fallen below marking A:
    – Add brake fluid for the front brake. (p. 94)

12.5 Adding brake fluid for the front brake

WARNING

Danger of accidents Brake fluid which is too old or of the wrong type impairs the function of the brake system.

– Make sure that brake fluid for the front and rear brake is changed in accordance with the service schedule.
– Make sure that only clean, approved brake fluid from a tightly sealed container is used.

WARNING

Danger of accidents An insufficient brake fluid level will cause the brake system to fail.

If the brake fluid level drops below the specified marking or the specified value, the brake system has a leak or the brake pads are worn down.

– Have the brake system checked and make sure that the problem has been eliminated before the vehicle is used again.

WARNING

Health hazard Brake fluid is a harmful substance.

– Keep brake fluid out of the reach of children.
– Wear suitable protective clothing and safety glasses.
– Do not allow brake fluid to come into contact with the skin, the eyes, or clothing.
– Consult a doctor immediately if brake fluid has been ingested.
– Rinse the affected area with plenty of water in the event of contact with the skin.
– Rinse eyes thoroughly with water immediately and consult a doctor if brake fluid comes into contact with the eyes.
– If brake fluid spills on to your clothing, change the clothing.

NOTE

Environmental hazard Hazardous substances cause environmental damage.

– Dispose of oils, grease, filters, fuel, cleaning agents, brake fluid, etc. correctly and in accordance with the applicable regulations.

Note

Avoid contact between brake fluid and painted parts. Brake fluid corrodes paint.

Preparatory work

– Check that the brake pads of the front brake are secured. (p. 95)

Main work

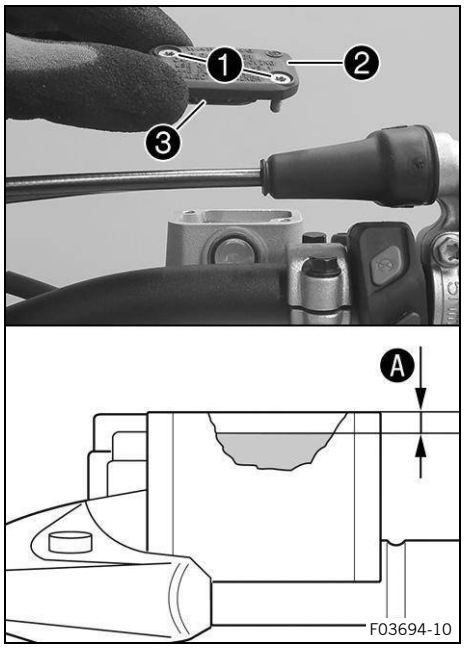

- Move the brake reservoir mounted on the handlebar to a horizontal position.
- Remove screws ❶.
- Take off cover ❷ with diaphragm ❸.
- Add brake fluid up to level Ⓐ.

Level Ⓐ (brake fluid level below reservoir rim)	5 mm (0.20 in)

Brake fluid DOT 5.1 (p. 163)

- Position cover ❷ with diaphragm ❸. Mount and tighten screws ❶.

Immediately clean up any brake fluid that has overflowed or spilled with water.

12.6 Checking that the brake pads of the front brake are secured

WARNING

Danger of accidents Worn brake pads reduce the brake action.

- Make sure that worn brake pads are replaced immediately.

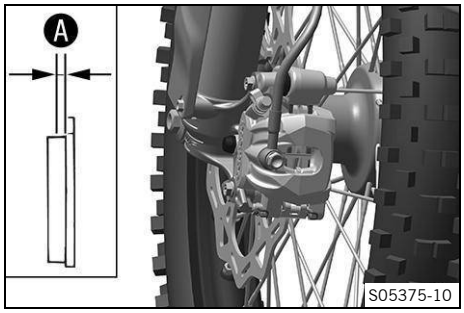

- Check all brake pads on both brake calipers for their lining thickness Ⓐ.

Minimum pad thickness Ⓐ	≥ 1 mm (≥ 0.04 in)

  » If it is less than the minimum thickness:
    - Change the front brake pads. (p. 96)
- Check the brake pads for damage and cracking.
  » If there is damage or cracking:
    - Change the front brake pads. (p. 96)
- Check that the brake pads are secured.
  » If the brake pads are not secured correctly:
    - Secure brake pads, replace with new parts if necessary.

12.7 Changing the brake pads of the front brake

WARNING
Danger of accidents Brake pads which have not been approved alter the braking action.
– Only use brake pads approved and recommended by the vehicle manufacturer.

WARNING
Danger of accidents Incorrect servicing will cause the brake system to fail.
– Ensure that service work and repairs are performed professionally.

WARNING
Danger of accidents Brake fluid which is too old or of the wrong type impairs the function of the brake system.
– Make sure that brake fluid for the front and rear brake is changed in accordance with the service schedule.
– Make sure that only clean, approved brake fluid from a tightly sealed container is used.

WARNING
Danger of accidents Oil, grease or wax on the brake discs reduces the brake action.
– Always keep the brake discs free of oil, fat and wax.
– Clean the brake discs with brake cleaner when necessary.

WARNING
Health hazard Brake fluid is a harmful substance.
– Keep brake fluid out of the reach of children.
– Wear suitable protective clothing and safety glasses.
– Do not allow brake fluid to come into contact with the skin, the eyes, or clothing.
– Consult a doctor immediately if brake fluid has been ingested.
– Rinse the affected area with plenty of water in the event of contact with the skin.
– Rinse eyes thoroughly with water immediately and consult a doctor if brake fluid comes into contact with the eyes.
– If brake fluid spills on to your clothing, change the clothing.

NOTE
Environmental hazard Hazardous substances cause environmental damage.
– Dispose of oils, grease, filters, fuel, cleaning agents, brake fluid, etc. correctly and in accordance with the applicable regulations.

Note
Avoid contact between brake fluid and painted parts. Brake fluid corrodes paint.

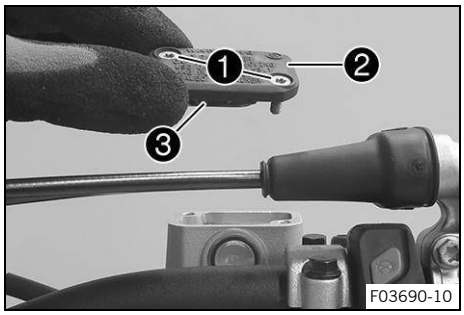

– Move the brake reservoir mounted on the handlebar to a horizontal position.
– Remove screws ❶.
– Take off cover ❷ with diaphragm ❸.

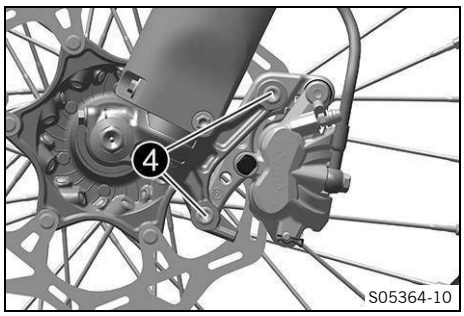

– Remove screws ❹.
– Press the brake pads back by slightly tilting the brake caliper laterally on the brake disc. Carefully pull the brake caliper up and off the brake disc.
– Press the brake piston back to its basic position and make sure that no brake fluid overflows from the brake reservoir, extract some brake fluid if necessary.

Do not operate the hand brake lever if the brake caliper has been removed.

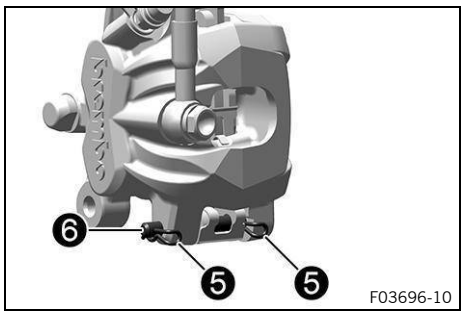

– Remove cotter pin ❺, pull out stud ❻, and remove the brake pads.
– Clean brake caliper and brake caliper support.

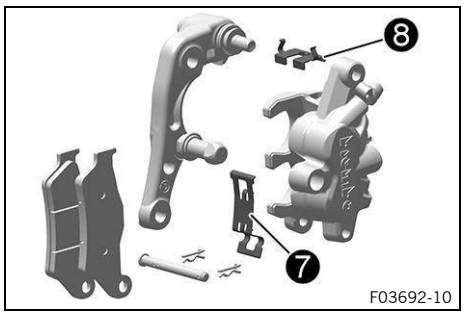

– Check that spring steel clip ❼ in the brake caliper and brake pad guide plate ❽ in the brake caliper support are properly seated.

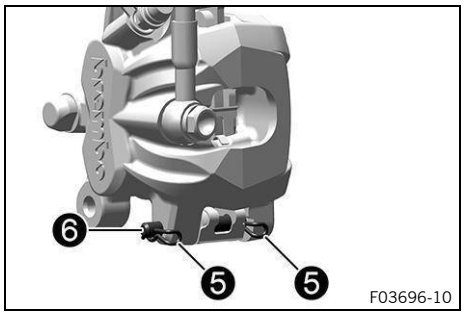

– Insert the new brake pads, mount stud ❻ and cotter pins ❺.

Make sure the brake pads and retaining spring are properly seated.
Mount the outer cotter pins from the front to the rear. Mount the inner cotter pins from the rear to the front.
Always replace brake pads in sets.

Tip
To make it easier to mount the stud, push the brake pads upward against the retaining spring.

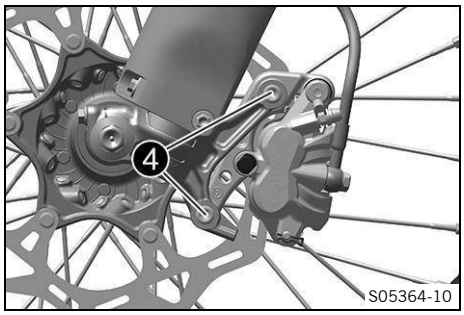

– Position the brake caliper.
– Mount and tighten screws ❹.

Screw, front brake caliper	
M8×30	25 Nm (18.4 ft·lb$_f$) **Loctite® 243**

– Operate the hand brake lever repeatedly until the brake pads are in contact with the brake disc and a pressure point is reached.

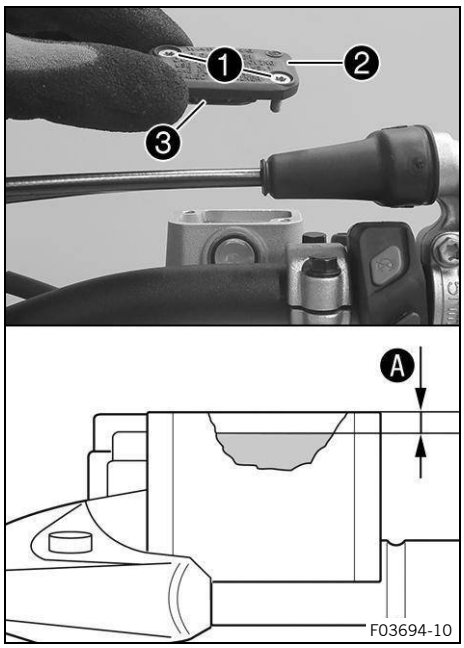

– Add brake fluid to level A.

Level A (brake fluid level below reservoir rim)	5 mm (0.20 in)

Brake fluid DOT 5.1 (p. 163)

– Position cover 2 with diaphragm 3.
– Mount and tighten screws 1.

Immediately clean up any brake fluid that has overflowed or spilled with water.

12.8 Checking the free travel of the brake pedal

WARNING
Danger of accidents The brake system fails in the event of overheating.
If there is no free travel on the brake lever, pressure builds up in the brake system.
– Set the free travel on the brake lever as specified.

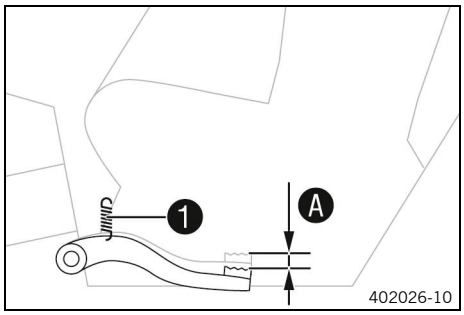

– Detach spring 1.
– Move the brake pedal back and forth between the end stop and the brake pedal cylinder piston actuation and check free travel A.

Free travel of brake pedal	3 mm … 5 mm (0.12 in … 0.20 in)

» If the free travel does not meet the specifications:
  – Adjust the basic position of the brake pedal. (p. 98)
– Attach spring 1.

12.9 Adjusting the basic position of the brake pedal

WARNING
Danger of accidents The brake system fails in the event of overheating.
If there is no free travel on the brake lever, pressure builds up in the brake system.
– Set the free travel on the brake lever as specified.

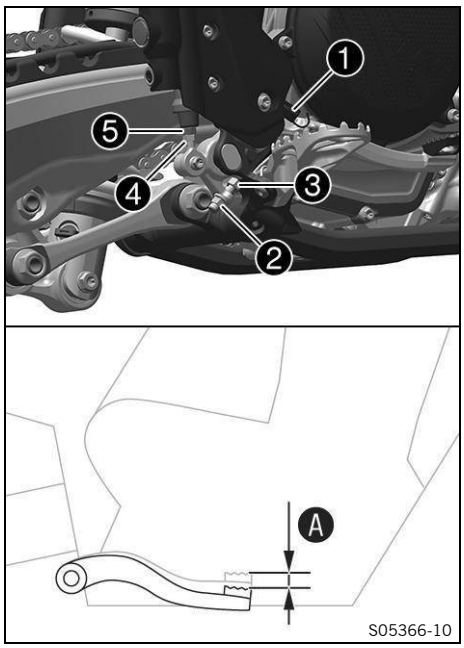

– Detach spring ❶.
– Loosen nut ❹ and unscrew it with push rod ❺ until you have maximum free travel.
– To adjust the basic position of the brake pedal to individual requirements, loosen nut ❷ and turn screw ❸ accordingly.

Note
The range of adjustment is limited.

– Turn push rod ❺ accordingly until you have free travel Ⓐ. If necessary, adjust the basic position of the brake pedal.

Free travel of brake pedal	3 mm … 5 mm (0.12 in … 0.20 in)

– Hold screw ❸ and tighten nut ❷.

Nut, brake pedal stop	
M8	20 Nm (14.8 ft·lb$_f$)

– Hold push rod ❺ and tighten nut ❹.

Remaining nuts on chassis	
M6	10 Nm (7.4 ft·lb$_f$)

– Attach spring ❶.

12.10 Checking the brake fluid level for the rear brake

WARNING
Danger of accidents Brake fluid which is too old or of the wrong type impairs the function of the brake system.
– Make sure that brake fluid for the front and rear brake is changed in accordance with the service schedule.
– Make sure that only clean, approved brake fluid from a tightly sealed container is used.

WARNING
Danger of accidents An insufficient brake fluid level will cause the brake system to fail.
If the brake fluid level drops below the specified marking or the specified value, the brake system has a leak or the brake pads are worn down.
– Have the brake system checked and make sure that the problem has been eliminated before the vehicle is used again.

Preparatory work
– Check that the brake pads of the rear brake are secured.
(p. 101)

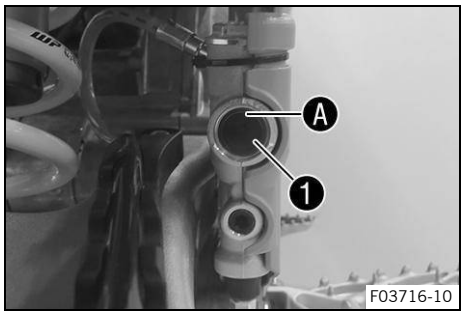

Main work

– Stand the vehicle upright.
– Check the brake fluid level in sight glass ❶.
  » If the brake fluid level has fallen below marking Ⓐ:
    – Add brake fluid for the rear brake. (p. 100)

12.11 Adding brake fluid for the rear brake

WARNING

Danger of accidents Brake fluid which is too old or of the wrong type impairs the function of the brake system.

– Make sure that brake fluid for the front and rear brake is changed in accordance with the service schedule.
– Make sure that only clean, approved brake fluid from a tightly sealed container is used.

WARNING

Danger of accidents An insufficient brake fluid level will cause the brake system to fail.

If the brake fluid level drops below the specified marking or the specified value, the brake system has a leak or the brake pads are worn down.

– Have the brake system checked and make sure that the problem has been eliminated before the vehicle is used again.

WARNING

Health hazard Brake fluid is a harmful substance.

– Keep brake fluid out of the reach of children.
– Wear suitable protective clothing and safety glasses.
– Do not allow brake fluid to come into contact with the skin, the eyes, or clothing.
– Consult a doctor immediately if brake fluid has been ingested.
– Rinse the affected area with plenty of water in the event of contact with the skin.
– Rinse eyes thoroughly with water immediately and consult a doctor if brake fluid comes into contact with the eyes.
– If brake fluid spills on to your clothing, change the clothing.

NOTE

Environmental hazard Hazardous substances cause environmental damage.

– Dispose of oils, grease, filters, fuel, cleaning agents, brake fluid, etc. correctly and in accordance with the applicable regulations.

Note

Avoid contact between brake fluid and painted parts. Brake fluid corrodes paint.

Preparatory work

– Check that the brake pads of the rear brake are secured. (p. 101)
– Remove the frame protector. (p. 60)

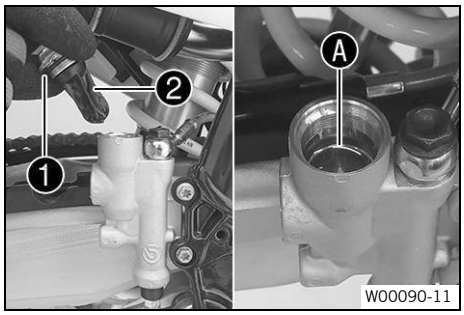

Main work

– Stand the vehicle upright.
– Remove screw cap ❶ with diaphragm ❷ and the O-ring.
– Add brake fluid to mark Ⓐ.

Brake fluid DOT 5.1 (p. 163)

– Mount and tighten the screw cap with the membrane and O-ring.

Immediately clean up any brake fluid that has overflowed or spilled using water.

Reworking

– Install the frame protector. (p. 60)

12.12 Checking that the brake pads of the rear brake are secured

WARNING
Danger of accidents Worn brake pads reduce the brake action.
– Make sure that worn brake pads are replaced immediately.

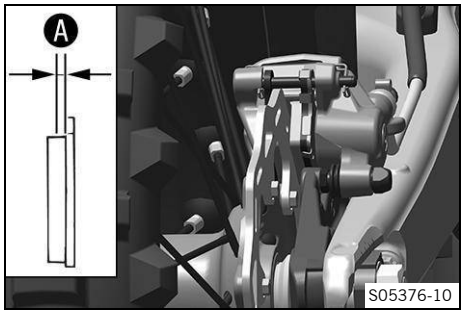

– Check all brake pads on both brake calipers for their lining thickness Ⓐ.

Minimum pad thickness Ⓐ	≥ 1 mm (≥ 0.04 in)

» If it is less than the minimum thickness:
  – Change the rear brake pads. (p. 101)
– Check the brake pads for damage and cracking.
» If there is damage or cracking:
  – Change the rear brake pads. (p. 101)
– Check that the brake pads are secured.
» If the brake pads are not secured correctly:
  – Secure brake pads, replace with new parts if necessary.

12.13 Changing the rear brake pads

WARNING
Danger of accidents Brake pads which have not been approved alter the braking action.
– Only use brake pads approved and recommended by the vehicle manufacturer.

WARNING
Danger of accidents Incorrect servicing will cause the brake system to fail.
– Ensure that service work and repairs are performed professionally.

WARNING

Danger of accidents Brake fluid which is too old or of the wrong type impairs the function of the brake system.

– Make sure that brake fluid for the front and rear brake is changed in accordance with the service schedule.
– Make sure that only clean, approved brake fluid from a tightly sealed container is used.

WARNING

Danger of accidents Oil, grease or wax on the brake discs reduces the brake action.

– Always keep the brake discs free of oil, fat and wax.
– Clean the brake discs with brake cleaner when necessary.

WARNING

Health hazard Brake fluid is a harmful substance.

– Keep brake fluid out of the reach of children.
– Wear suitable protective clothing and safety glasses.
– Do not allow brake fluid to come into contact with the skin, the eyes, or clothing.
– Consult a doctor immediately if brake fluid has been ingested.
– Rinse the affected area with plenty of water in the event of contact with the skin.
– Rinse eyes thoroughly with water immediately and consult a doctor if brake fluid comes into contact with the eyes.
– If brake fluid spills on to your clothing, change the clothing.

NOTE

Environmental hazard Hazardous substances cause environmental damage.

– Dispose of oils, grease, filters, fuel, cleaning agents, brake fluid, etc. correctly and in accordance with the applicable regulations.

Note

Avoid contact between brake fluid and painted parts. Brake fluid corrodes paint.

Preparatory work

– Remove the frame protector. (p. 60)

Main work

– Stand the vehicle upright.
– Remove screw cap ❶ with diaphragm ❷ and the O-ring.

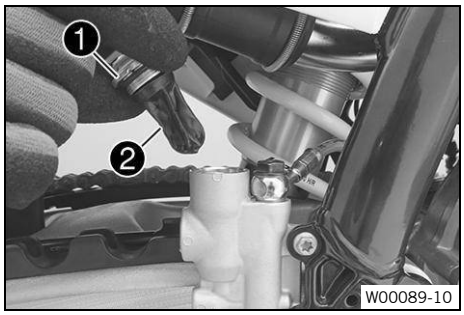

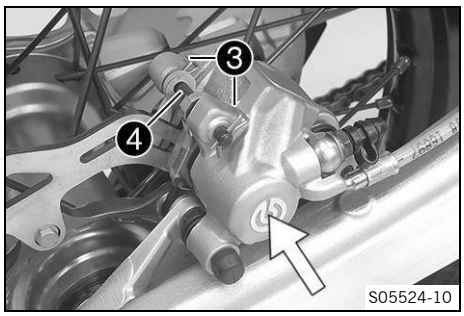

– Manually press the brake caliper toward the brake disc to push back the brake piston. Ensure that brake fluid does not flow out of the brake reservoir, and siphon off excess if required.
– Remove cotter pins ❸, pull out pin ❹, and remove the brake linings.
– Clean brake caliper and brake caliper support.

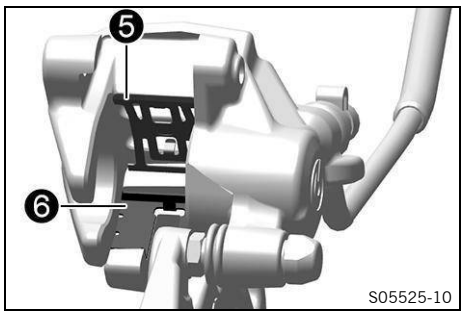

– Check that spring steel clip ❺ in the brake caliper and brake pad guide plate ❻ in the brake caliper support are properly seated.
  ✓ The arrow on the spring steel clip points in the rotation direction of the brake disc.

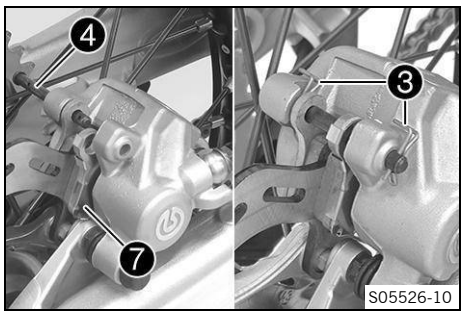

– Insert the new brake linings, insert pin ❹, and mount cotter pins ❸.

Always replace brake pads in sets.
Make sure that decoupling plate ❼ is mounted on the piston side brake pad.

– Actuate the brake disc repeatedly until the brake pads are in contact with the brake disc and a pressure point is achieved.

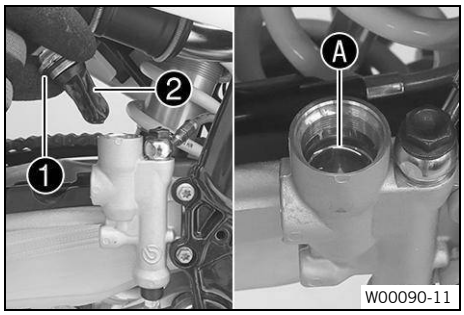

– Correct brake fluid level to marking Ⓐ.

Brake fluid DOT 5.1 (p. 163)

– Mount and tighten screw cap ❶ with membrane ❷ and the O-ring.

Immediately clean up any brake fluid that has overflowed or spilled using water.

Reworking

– Install the frame protector. (p. 60)

13.1 Removing the front wheel

Preparatory work

– Raise the motorcycle with a lift stand. (p. 56)

Main work

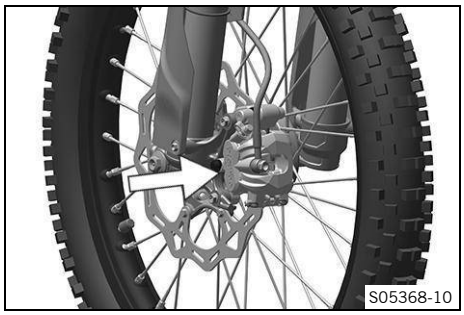

– Manually press the brake caliper toward the brake disc to push back the brake pistons.

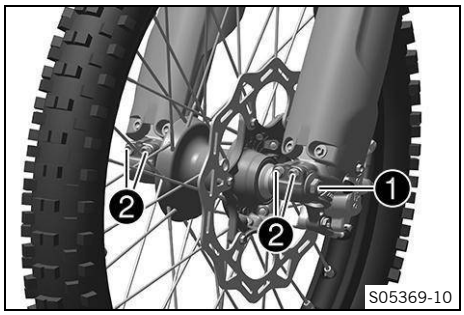

– Loosen screw ❶ by four turns.
– Loosen screws ❷.
– Press on screw ❶ to push the wheel spindle out of the fork shoe.
– Remove screw ❶.

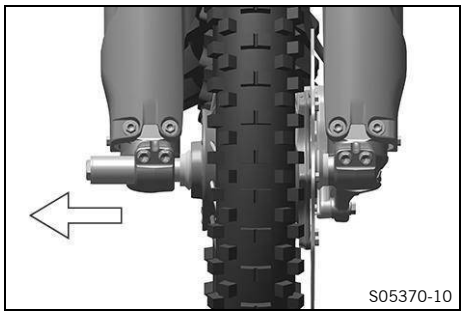

WARNING

Danger of accidents Damaged brake discs reduce the braking action.

– Always lay the wheel down in such a way that the brake disc is not damaged.

– Hold front wheel and remove wheel spindle. Take the front wheel out of the fork.

Do not actuate the hand brake lever when the front wheel is removed.

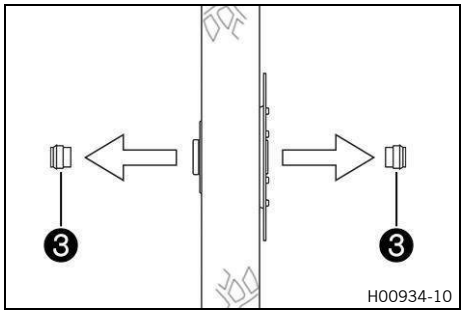

– Remove spacers ❸.

13.2 Installing the front wheel

WARNING

Danger of accidents Oil, grease or wax on the brake discs reduces the brake action.

– Always keep the brake discs free of oil, fat and wax.
– Clean the brake discs with brake cleaner when necessary.

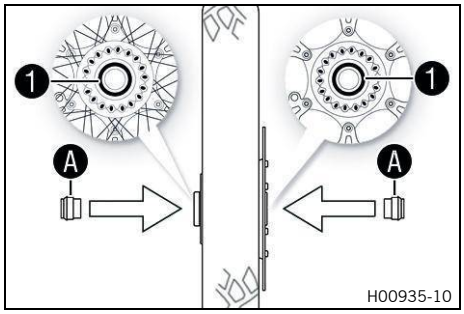

– Check the wheel bearing for damage and wear.
  » If the wheel bearing is damaged or worn:
    – Change the front wheel bearing.
– Clean and grease radial shaft seal ❶ and contact surfaces Ⓐ on the spacers.

Long-life grease (p. 161)

– Insert spacers.
– Clean and lightly grease the wheel spindle.

Long-life grease (p. 161)

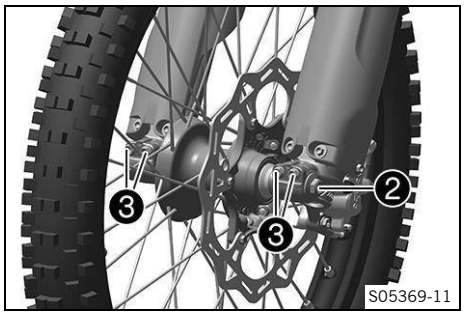

– Position the front wheel and insert the wheel spindle.
  ✓ The brake pads are positioned correctly.
– Mount and tighten screw ❷.

Screw, wheel spindle, front	
M20×1.5	35 Nm (25.8 ft·lb$_f$)

– Operate the hand brake lever several times until the brake pads are in contact with the brake disc.
– Remove the motorcycle from the lift stand. (p. 56)
– Operate the front brake and compress the fork a few times firmly.
  ✓ The fork legs straighten.
– Tighten screws ❸.

Screw, fork shoe	
M8×25	15 Nm (11.1 ft·lb$_f$)

13.3 Removing the rear wheel

Preparatory work

– Raise the motorcycle with a lift stand. (p. 56)

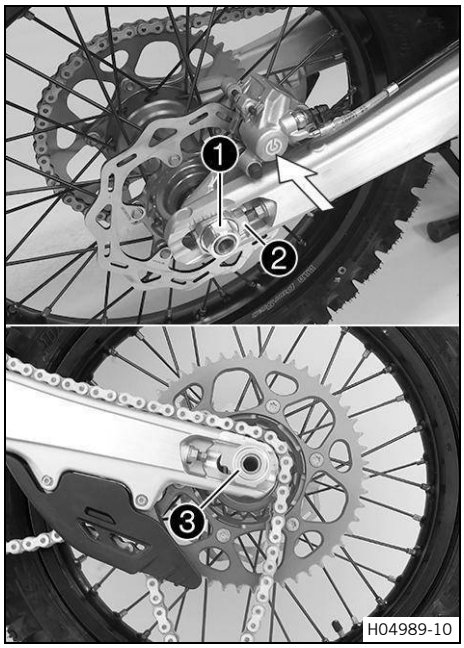

Main work

– Manually press the brake caliper toward the brake disc to push back the brake pistons.
– Remove nut ❶.
– Remove chain tension adjuster ❷. Pull out wheel spindle ❸ far enough to allow the rear wheel to be pushed forward.
– Push the rear wheel forward as far as possible. Remove the chain from the rear sprocket.

Protect the components against damage by covering them.

WARNING

Danger of accidents Damaged brake discs reduce the braking action.

– Always lay the wheel down in such a way that the brake disc is not damaged.

– Hold the rear wheel and remove wheel spindle. Take the rear wheel out of the swingarm.

Do not actuate the brake pedal when the rear wheel is removed.

– Remove spacers ❹.

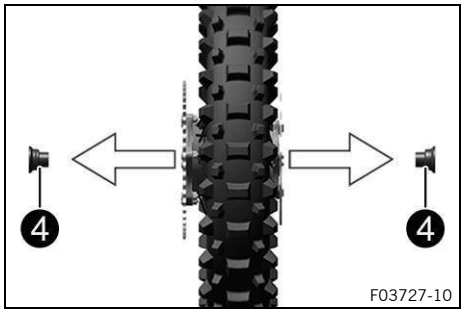

13.4 Installing the rear wheel

WARNING

Danger of accidents Oil, grease or wax on the brake discs reduces the brake action.

– Always keep the brake discs free of oil, fat and wax.
– Clean the brake discs with brake cleaner when necessary.

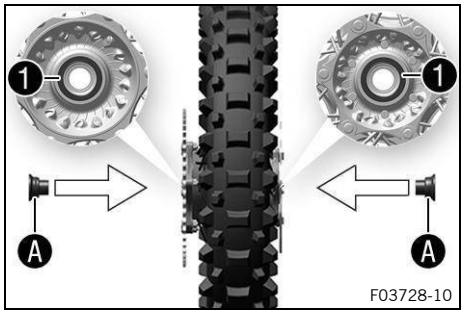

Main work

– Check the wheel bearing for damage and wear.
  » If the wheel bearing is damaged or worn:
    – Change the rear wheel bearing.
– Clean and grease radial shaft seal ❶ and contact surfaces Ⓐ on the spacers.

Long-life grease (p. 161)

– Insert spacers.
– Clean and lightly grease the wheel spindle.

Long-life grease (p. 161)

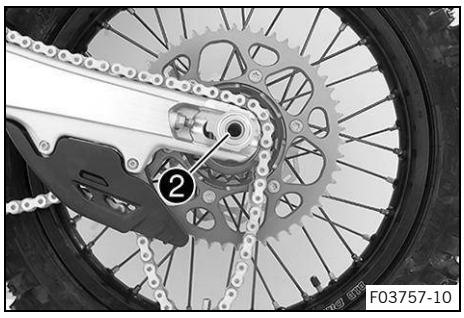

– Position the rear wheel and insert wheel spindle ❷.
  ✓ The brake pads are positioned correctly.
– Attach the chain.

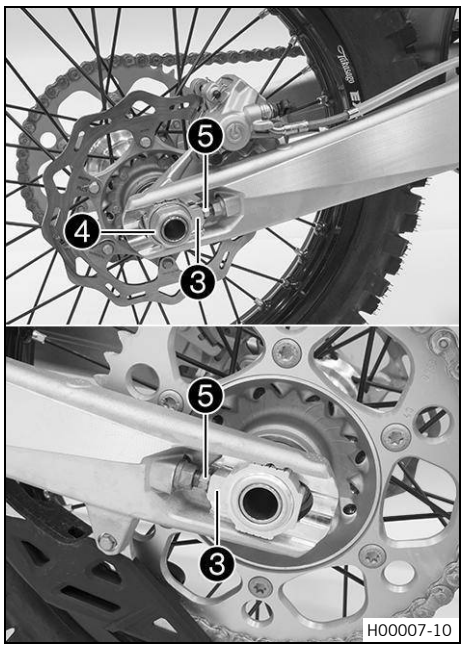

– Position chain tension adjuster ❸. Mount nut ❹ but do not tighten yet.
– Make sure that chain tension adjusters ❸ are fitted correctly on adjusting screws ❺.
– Check the chain tension. (p. 83)
– Tighten nut ❹.

Nut, wheel spindle, rear	
M22×1.5	80 Nm (59.0 ft·lb$_f$)

Note
The wide range of adjustment of the chain tension adjusters (32 mm) enables different secondary transmissions with the same chain length.
Chain tension adjusters ❸ can be turned by 180°.

– Actuate the brake disc repeatedly until the brake pads are in contact with the brake disc and a pressure point is achieved.

Reworking

– Remove the motorcycle from the lift stand. (p. 56)

13.5 Checking the tire condition

Note
Only mount tires approved and/or recommended by KTM.
Other tires could have a negative effect on handling characteristics.
The type, condition, and pressure of the tires all have a major impact on the handling of the motorcycle.
The tires mounted on the front and rear wheels must have a similar profile.
Worn tires have a negative effect on handling characteristics, especially on wet surfaces.

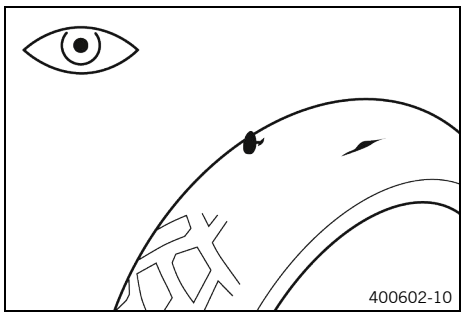

– Check the front and rear tires for cuts, embedded objects, and other damage.
  » If the tires have cuts, run-in objects, or other damage:
    – Change the tires.

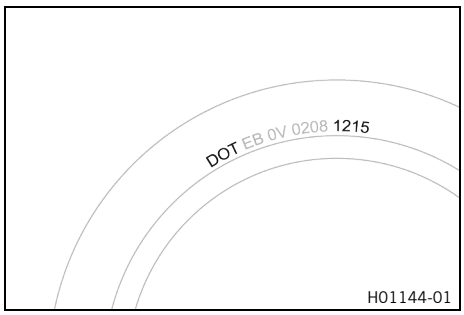

– Check the tire age.

Note
The tire date of manufacture is usually contained in the tire label and is indicated by the last four digits of the **DOT** number. The first two digits indicate the week of manufacture and the last two digits the year of manufacture.
KTM recommends that the tires be changed after 5 years at the latest, regardless of the actual state of wear.

» If the tires are older than five years:
  – Change the tires.

13.6 Checking the tire pressure

Note
Low tire pressure leads to abnormal wear and the tire overheating.
Correct tire pressure ensures optimal riding comfort and maximum tire service life.

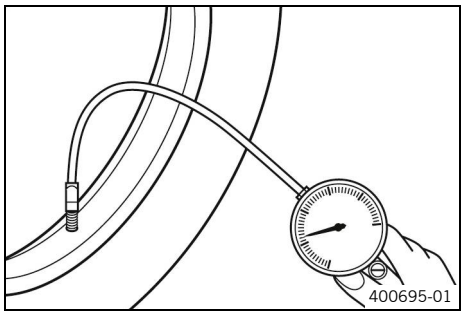

– Remove the protection cap.
– Check the tire pressure when the tires are cold.

Off-road tire pressure	
front	1.0 bar (14.5 psi)
rear	1.0 bar (14.5 psi)

» If the tire pressure does not meet specifications:
  – Correct tire pressure.
– Mount the protection cap.

13.7 Checking the spoke tension

WARNING

Danger of accidents Incorrectly tensioned spokes impair the handling characteristic and can result in secondary damage.

If the spokes are too tight, they can break due to being overloaded.

Loose spokes can cause lateral or radial run-out in the wheel and other spokes will loosen as a result.

– Check the spoke tension regularly, especially on a new vehicle.

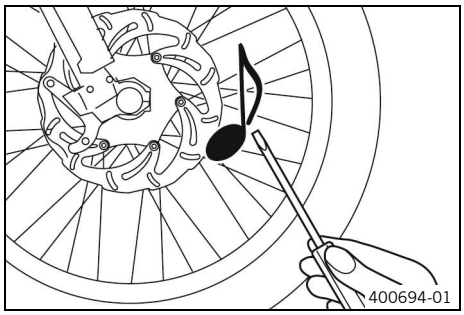

– Briefly tap each spoke with a screwdriver.

You should hear a high-pitched sound.

Note

The frequency of the sound depends on the spoke length and spoke diameter.

If spokes of the same length and diameter vibrate with a different tone, this is an indication that the spoke tensions differ.

» If the spoke tension differs:

– Correct the spoke tension.

– Check the spoke torque.

Spoke nipple, front wheel	
M4,5	6 Nm (4.4 ft·lb$_f$)
Spoke nipple, rear wheel	
M4,5	6 Nm (4.4 ft·lb$_f$)

Torque wrench kit (58429094000)

14.1 Removing the 12 V battery

WARNING

Risk of injury 12–V batteries contain harmful substances.

- Keep 12–V batteries out of the reach of children.
- Keep the battery away from sparks or open flames.
- Only charge batteries in well-ventilated rooms.
- Maintain a minimum distance from flammable materials when charging 12-V batteries.

Minimum distance	1 m (3 ft – 3 in)

- Do not charge deeply discharged 12– V batteries if the charge is already below the minimum voltage.

Minimum voltage before starting charging	9 V

- Dispose of 12 V batteries correctly if they have less than the minimum voltage.

NOTE

Environmental hazard 12–V batteries contain environmentally-hazardous materials.

- Do not dispose of 12–V batteries as household waste.
- Dispose of 12–V batteries at a collection point for used batteries.

NOTE

Environmental hazard Hazardous substances cause environmental damage.

- Dispose of oils, grease, filters, fuel, cleaning agents, brake fluid, etc. correctly and in accordance with the applicable regulations.

Preparatory work

- Remove the seat. (p. 71)
- Remove the fuel tank. (p. 78)

Main work

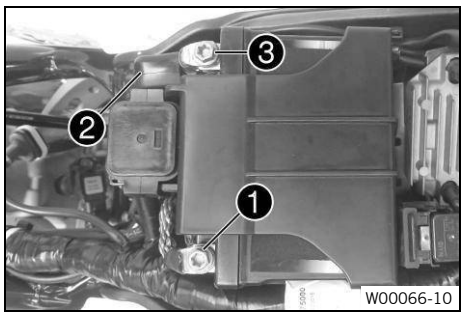

- Disconnect negative cable ❶ from the 12 V battery.
- Pull back positive terminal cover ❷ and disconnect positive cable ❸ from the 12-V battery.

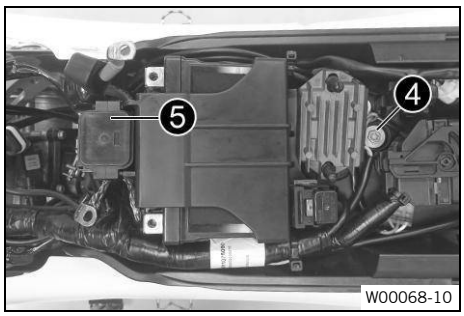

- Remove screw ❹.
- Pull starter relay ❺ off the holder and hang to the side.

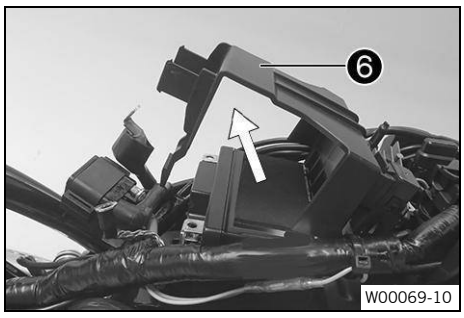

– Pull up battery holding bracket ❻ and remove the 12-V battery to the front.

Pay attention to the wiring harness.

14.2 Installing the 12 V battery

Main work

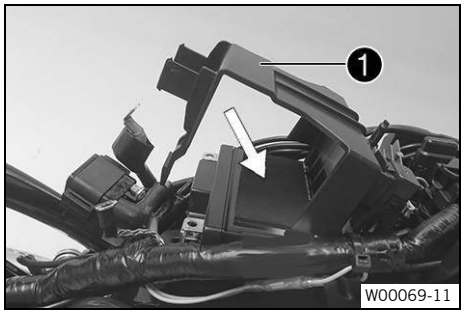

– Pull up battery holding bracket ❶, insert the 12-V battery into the battery compartment with the terminals facing upwards and secure with battery holding bracket ❶.

Ensure that the cable is routed correctly.

12-V battery (HJTZ5S-FP-C)

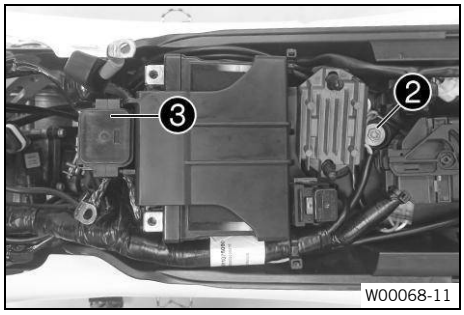

– Mount and tighten screw ❷.

Screw, battery holding bracket	
M6×12	6 Nm (4.4 ft·lb$_f$)

– Mount starter relay ❸ onto the bracket and route the cable.

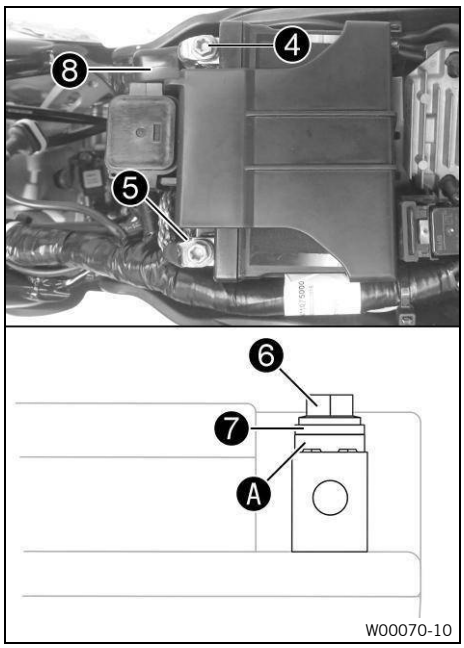

– Connect positive cable ❹ to the 12 V battery.

Screw, battery terminal	
M5×12	2.5 Nm (1.84 ft·lb$_f$)

– Connect negative cable ❺ to the 12 V battery.

Screw, battery terminal	
M5×12	2.5 Nm (1.84 ft·lb$_f$)

Contact disks Ⓐ must be mounted under screws ❻ and cable lug ❼ with the claws toward the battery terminal.

– Slide positive terminal cover ❽ over the positive terminal.

Reworking

– Install the fuel tank. (p. 80)
– Mount the seat. (p. 72)

14.3 Charging the 12 V battery

WARNING

Risk of injury 12–V batteries contain harmful substances.

– Keep 12–V batteries out of the reach of children.
– Keep the battery away from sparks or open flames.
– Only charge batteries in well-ventilated rooms.
– Maintain a minimum distance from flammable materials when charging 12-V batteries.

Minimum distance	1 m (3 ft – 3 in)

– Do not charge deeply discharged 12– V batteries if the charge is already below the minimum voltage.

Minimum voltage before starting charging	9 V

– Dispose of 12 V batteries correctly if they have less than the minimum voltage.

NOTE

Environmental hazard 12–V batteries contain environmentally-hazardous materials.

– Do not dispose of 12–V batteries as household waste.
– Dispose of 12–V batteries at a collection point for used batteries.

NOTE

Environmental hazard Hazardous substances cause environmental damage.

– Dispose of oils, grease, filters, fuel, cleaning agents, brake fluid, etc. correctly and in accordance with the applicable regulations.

Note

Even when there is no load on the 12-V battery, it discharges steadily each day.

The state of charge and the method of charging are very important for the service life of the 12 V battery.

Rapid recharging with a high charging current shortens the service life of the battery.

If the charging current, charging voltage, or charging time is exceeded, the 12-V battery will be destroyed.

If the 12 V battery is left in a discharged state for an extended period, it will become deeply discharged and suffer a loss of capacity, destroying the battery.

The 12 V battery is maintenance-free.

Preparatory work

– Remove the seat. (p. 71)
– Remove the fuel tank. (p. 78)
– Remove the 12 V battery. (p. 110)

Main work

– Do not remove cover 1.
– Check the battery voltage.
  » Battery voltage:
    • < 9 V
    – Do not charge the 12 V battery.
    – Replace the 12 V battery and dispose of the old 12 V battery properly.
  » If the specifications have been met:
    Battery voltage:
    • ≥ 9 V
    – Charge the 12 V battery.

Read the accompanying instructions.	
Maximum charging voltage	14.4 V
Minimum charging voltage	3.0 A
Maximum charging time	12 h
The charging current, charging voltage, and charging time must not be exceeded.	
Recharge the 12 V battery regularly when the motorcycle is not being used.	3 months
If the 12 V battery is depleted from starting the vehicle repeatedly, the battery must be charged immediately.	

Battery charger and tester (A54029974000)

Note

This battery charger tests whether the 12 V battery retains its voltage. It is also impossible to overcharge the 12 V battery with this battery charger. The charging time may be longer at low temperatures.

This battery charger is only suitable for lithium iron phosphate batteries.

– Switch off the charger after charging and disconnect from the 12 V battery.

Reworking

– Install the 12 V battery. (p. 111)
– Install the fuel tank. (p. 80)
– Mount the seat. (p. 72)

14.4 Changing the main fuse

WARNING

Fire hazard Incorrect fuses overload the electrical system.

– Use only fuses with the prescribed amperage.
– Do not bypass or repair fuses.

Note

The main fuse protects all electrical power loads of the vehicle. It is located in the starter relay housing under the seat.

Preparatory work

– Press kill button when the engine is at idle speed until the engine stops.
– Remove the seat. (p. 71)
– Remove the fuel tank. (p. 78)

Main work

– Pull starter relay 1 off of the bracket.

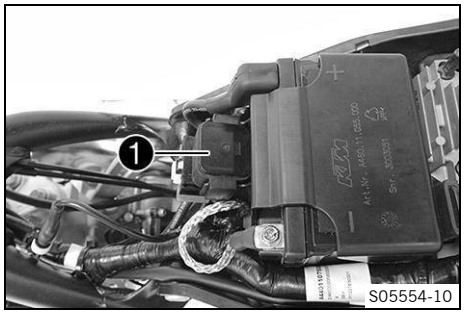

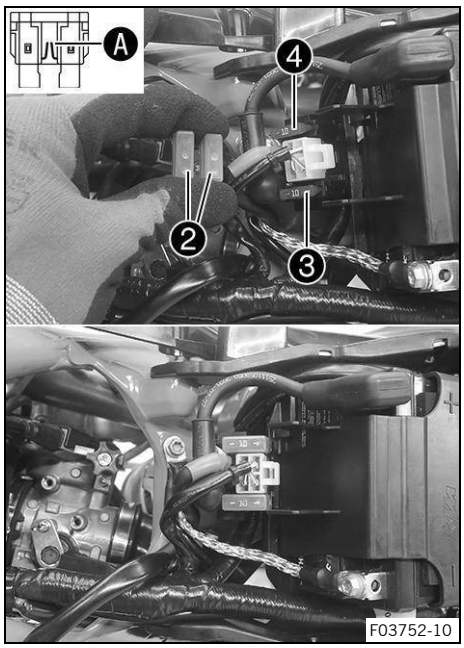

– Remove protection caps ❷.
– Remove faulty main fuse ❸.

Note
A faulty fuse has a burned-out fuse wire Ⓐ.
A spare fuse ❹ is located in the starter relay.

– Insert the main fuse.

Fuse (58011109110)

– Check that the electrical equipment is functioning properly.

Tip
Insert a new spare fuse so that it is available if needed.

– Mount the protection caps.
– Mount the starter relay onto the holder and route the cable.

Reworking
– Install the fuel tank. (p. 80)
– Mount the seat. (p. 72)

14.5 Changing the fuse of the fuel pump

WARNING
Fire hazard Incorrect fuses overload the electrical system.
– Use only fuses with the prescribed amperage.
– Do not bypass or repair fuses.

CAUTION
Danger of burns The regulator rectifier gets very hot when the vehicle is operated.
– Allow the regulator rectifier to cool down before performing any work.

Note
The fuel pump is protected by the fuel pump fuse. This is located under the seat.

Preparatory work
– Remove the seat. (p. 71)

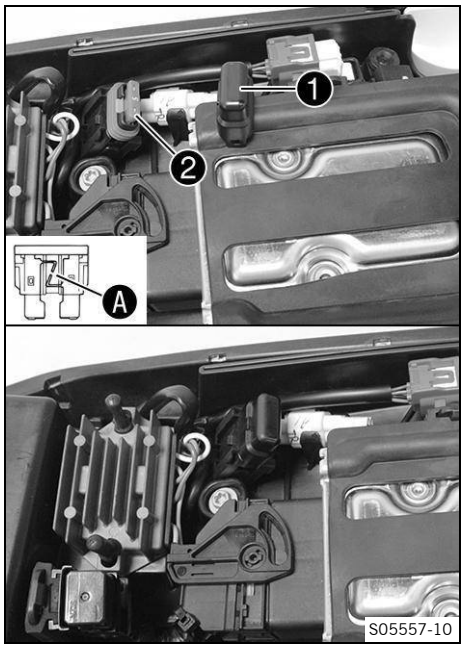

Main work

– Remove protection cap ❶.
– Remove faulty main fuse ❷.

> **Note**
> A faulty fuse has a burned-out fuse wire Ⓐ.

– Put in the new fuse for the fuel pump.

Fuse (58011109105)

– Check that the electrical equipment is functioning properly.
– Attach the protection cap.

Reworking

– Mount the seat. (p. 72)

14.6 Diagnostic connector

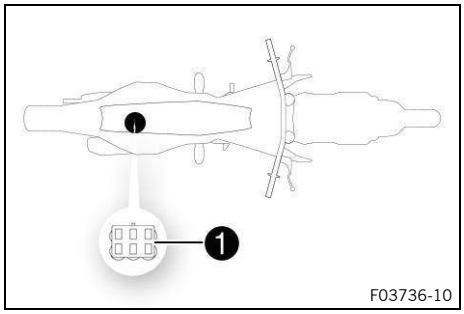

Diagnostics connector ❶ is located under the seat.

> **Note**
> As soon as the diagnostics tool is connected, the hourmeter starts running.
> Before longer diagnostic sessions, unplug the hourmeter behind the number plate.

15.1 Cooling system

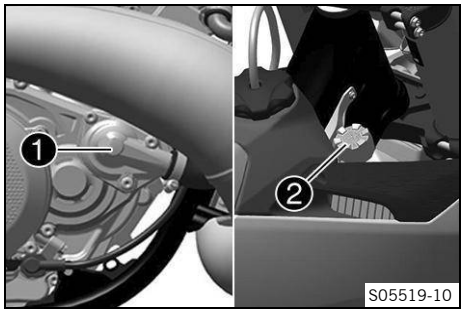

Water pump ❶ in the engine circulates the coolant.

The pressure resulting from the warming of the cooling system is regulated by a valve in radiator cap ❷. This ensures that operating the vehicle at the specified coolant temperature will not result in a risk of malfunctions.

120 °C (248.0 °F)

The coolant is cooled by the air stream.

The lower the vehicle speed, the lower the cooling effect. Dirty cooling fins also reduce the cooling effect.

15.2 Checking the frost protection and coolant level

WARNING

Health hazard Coolant is harmful to health.

- Keep coolant out of the reach of children.
- Do not allow coolant to come into contact with skin, eyes, or clothing.
- Consult a doctor immediately if coolant has been ingested.
- Rinse the affected area immediately with plenty of water in the event of contact with skin.
- Rinse eyes thoroughly with water and consult a doctor immediately if coolant comes into contact with eyes.
- If coolant spills on to your clothing, change the clothing.
- Store coolant properly in a suitable container and keep out of the reach of children.

WARNING

Danger of scalding The coolant heats up and is under high pressure when the vehicle is operated.

- Do not open the radiator, the radiator hoses, or other cooling system components if the engine or the cooling system are at operating temperature.
- Allow the cooling system and the engine to cool down before you open the radiator, the radiator hoses, or other components of the cooling system.
- In the event of scalding, rinse the area affected immediately with lukewarm water.

Condition: The engine is cold

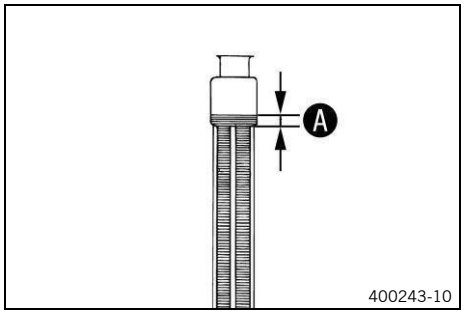

- Stand the motorcycle upright on a level surface.
- Take off the radiator cap.
- Check the frost protection in the coolant.

−45 °C … −25 °C (−49.0 °F … −13.0 °F)

  » If the frost protection in the coolant does not match the specified value:
    - Correct the frost protection in the coolant.
- Check the coolant level in the radiator.

Coolant level Ⓐ above the radiator fins	10 mm (0.39 in)

» If the coolant level does not meet the specifications:
– Correct the coolant level.

Coolant	
Coolant (p. 163) Antifreeze protection to at least: −25 °C (−13.0 °F)	0.95 l (0.251 liq. gal_{US})

– Mount the radiator cap.

15.3 Checking the coolant level

WARNING
Health hazard Coolant is harmful to health.
– Keep coolant out of the reach of children.
– Do not allow coolant to come into contact with skin, eyes, or clothing.
– Consult a doctor immediately if coolant has been ingested.
– Rinse the affected area immediately with plenty of water in the event of contact with skin.
– Rinse eyes thoroughly with water and consult a doctor immediately if coolant comes into contact with eyes.
– If coolant spills on to your clothing, change the clothing.
– Store coolant properly in a suitable container and keep out of the reach of children.

WARNING
Danger of scalding The coolant heats up and is under high pressure when the vehicle is operated.
– Do not open the radiator, the radiator hoses, or other cooling system components if the engine or the cooling system are at operating temperature.
– Allow the cooling system and the engine to cool down before you open the radiator, the radiator hoses, or other components of the cooling system.
– In the event of scalding, rinse the area affected immediately with lukewarm water.

Condition: The engine is cold

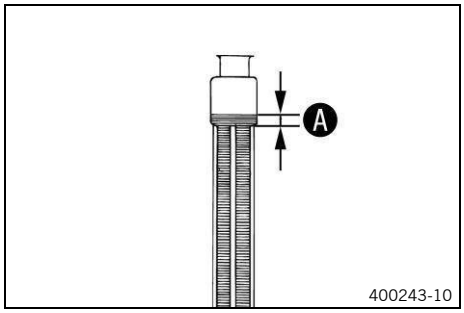

– Stand the motorcycle upright on a level surface.
– Take off the radiator cap.
– Check the coolant level in the radiator.

Coolant level A above the radiator fins	10 mm (0.39 in)

» If the coolant level does not meet the specifications:
– Correct the coolant level.

Coolant	
Coolant (p. 163) Antifreeze protection to at least: −25 °C (−13.0 °F)	0.95 l (0.251 liq. gal_{US})

– Mount the radiator cap.

15.4 Draining the coolant

WARNING

Health hazard Coolant is harmful to health.

- Keep coolant out of the reach of children.
- Do not allow coolant to come into contact with skin, eyes, or clothing.
- Consult a doctor immediately if coolant has been ingested.
- Rinse the affected area immediately with plenty of water in the event of contact with skin.
- Rinse eyes thoroughly with water and consult a doctor immediately if coolant comes into contact with eyes.
- If coolant spills on to your clothing, change the clothing.
- Store coolant properly in a suitable container and keep out of the reach of children.

WARNING

Danger of scalding The coolant heats up and is under high pressure when the vehicle is operated.

- Do not open the radiator, the radiator hoses, or other cooling system components if the engine or the cooling system are at operating temperature.
- Allow the cooling system and the engine to cool down before you open the radiator, the radiator hoses, or other components of the cooling system.
- In the event of scalding, rinse the area affected immediately with lukewarm water.

Condition: The engine is cold

- Stand the motorcycle upright.
- Place an appropriate container under the water pump cover.

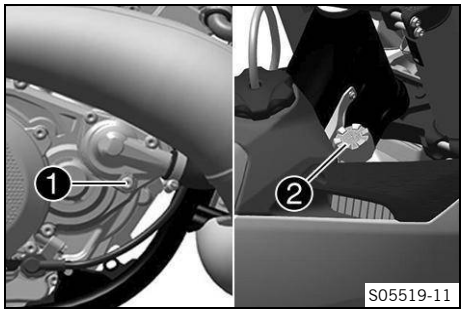

- Remove screw ❶. Take off radiator cap ❷.
- Completely drain the coolant.
- Mount screw ❶ with the new sealing ring and tighten.

Screw, water pump cover	
M6	10 Nm (7.4 ft·lb$_f$)

15.5 Refilling the coolant

WARNING

Health hazard Coolant is harmful to health.

- Keep coolant out of the reach of children.
- Do not allow coolant to come into contact with skin, eyes, or clothing.
- Consult a doctor immediately if coolant has been ingested.
- Rinse the affected area immediately with plenty of water in the event of contact with skin.
- Rinse eyes thoroughly with water and consult a doctor immediately if coolant comes into contact with eyes.
- If coolant spills on to your clothing, change the clothing.
- Store coolant properly in a suitable container and keep out of the reach of children.

Main work

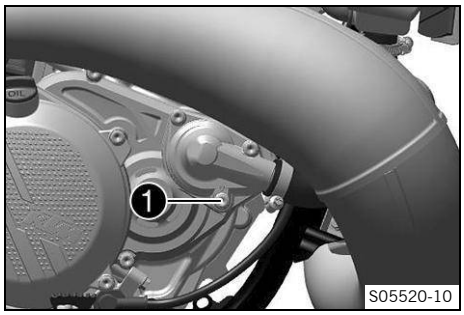

– Make sure that screw ❶ is tightened.
– Stand the motorcycle upright.

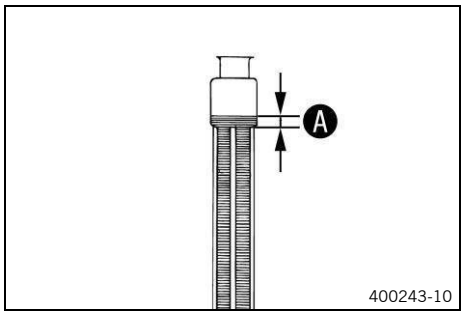

– Pour coolant in up to level Ⓐ above the radiator fins.

10 mm (0.39 in)

Coolant	
Coolant (p. 163) Antifreeze protection to at least: −25 °C (−13.0 °F)	0.95 l (0.251 liq. gal_{US})

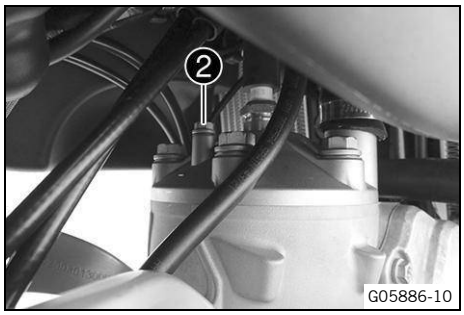

– Remove screw ❷ and wait until coolant emerges without bubbles.
– Mount and tighten screw ❷.

Cylinder head bleed screw	
M6	8 Nm (5.9 $ft{\cdot}lb_f$)

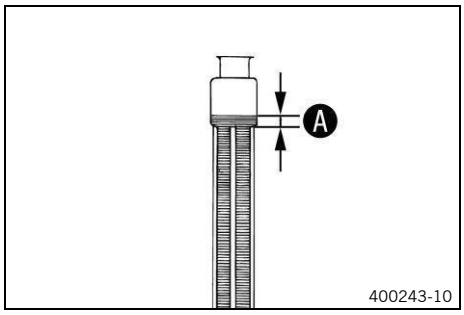

– Pour coolant in up to level Ⓐ above the radiator fins.

10 mm (0.39 in)

Coolant	
Coolant (p. 163) Antifreeze protection to at least: −25 °C (−13.0 °F)	0.95 l (0.251 liq. gal_{US})

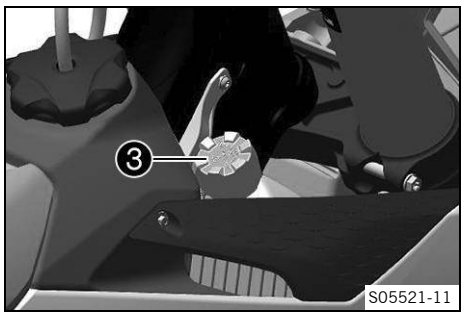

– Mount radiator cap ❸.

DANGER

Danger of poisoning Exhaust gases are toxic and inhaling them may result in unconsciousness and death.

– Always ensure that there is sufficient ventilation when running the engine.
– Use suitable exhaust extraction when starting or running the engine in an enclosed space.

– Allow the engine to warm up and cool down again.
– Check the transmission and cooling system for leaks.

Reworking

– Check the coolant level. (p. 118)

15.6 Changing the coolant

WARNING

Health hazard Coolant is harmful to health.

– Keep coolant out of the reach of children.
– Do not allow coolant to come into contact with skin, eyes, or clothing.
– Consult a doctor immediately if coolant has been ingested.
– Rinse the affected area immediately with plenty of water in the event of contact with skin.
– Rinse eyes thoroughly with water and consult a doctor immediately if coolant comes into contact with eyes.
– If coolant spills on to your clothing, change the clothing.
– Store coolant properly in a suitable container and keep out of the reach of children.

WARNING

Danger of scalding The coolant heats up and is under high pressure when the vehicle is operated.

– Do not open the radiator, the radiator hoses, or other cooling system components if the engine or the cooling system are at operating temperature.
– Allow the cooling system and the engine to cool down before you open the radiator, the radiator hoses, or other components of the cooling system.
– In the event of scalding, rinse the area affected immediately with lukewarm water.

Condition: The engine is cold

Main work

– Stand the motorcycle upright.
– Place an appropriate container under the water pump cover.

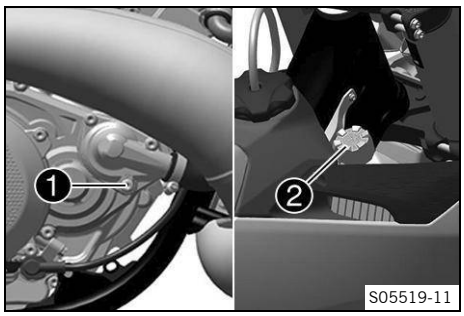

– Remove screw ❶. Take off radiator cap ❷.
– Completely drain the coolant.
– Mount screw ❶ with the new sealing ring and tighten.

Screw, water pump cover	
M6	10 Nm (7.4 ft·lb$_f$)

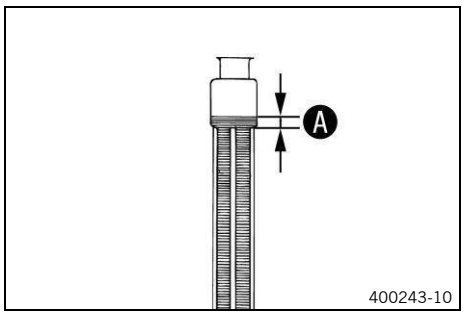

– Pour coolant in up to level Ⓐ above the radiator fins.

10 mm (0.39 in)

Coolant	
Coolant (p. 163) Antifreeze protection to at least: −25 °C (−13.0 °F)	0.95 l (0.251 liq. gal$_{US}$)

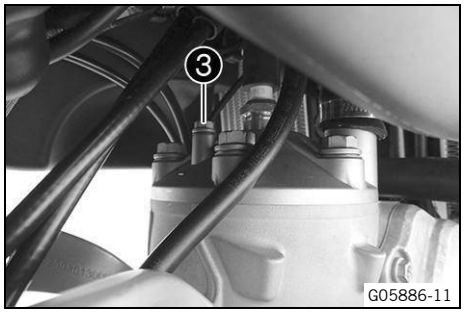

– Remove screw ❸ and wait until coolant emerges without bubbles.
– Mount and tighten screw ❸.

Cylinder head bleed screw	
M6	8 Nm (5.9 ft·lb$_f$)

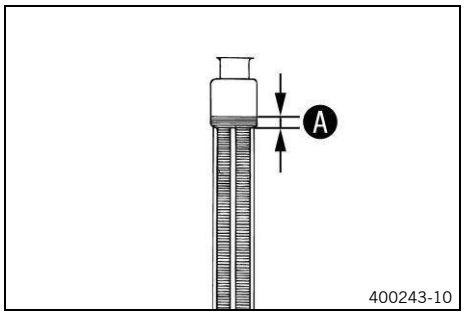

– Pour coolant in up to level Ⓐ above the radiator fins.

10 mm (0.39 in)

Coolant	
Coolant (p. 163) Antifreeze protection to at least: −25 °C (−13.0 °F)	0.95 l (0.251 liq. gal$_{US}$)

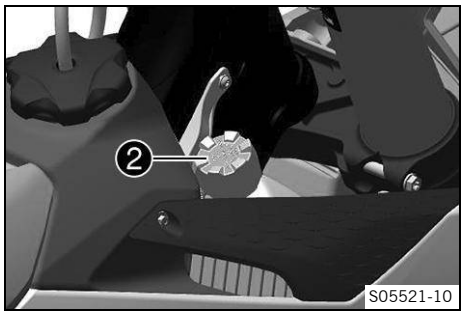

– Mount radiator cap ❷.

DANGER

Danger of poisoning Exhaust gases are toxic and inhaling them may result in unconsciousness and death.

– Always ensure that there is sufficient ventilation when running the engine.
– Use suitable exhaust extraction when starting or running the engine in an enclosed space.

– Allow the engine to warm up and cool down again.
– Check the transmission and cooling system for leaks.

Reworking

– Check the coolant level. (p. 118)

16.1 Programming the end positions of the exhaust control

Note
If work has been carried out on the exhaust control, the end positions must be reprogrammed.

Condition: Engine is off

Preparatory work

– Remove the seat. (p. 71)

Main work

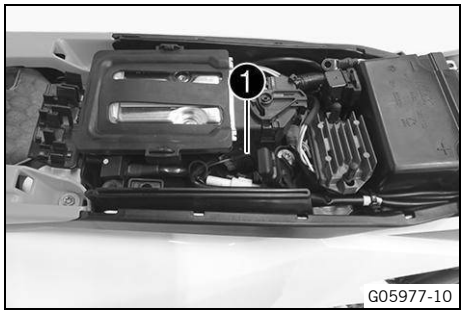

– Pull diagnostics connector ❶ off the holder.

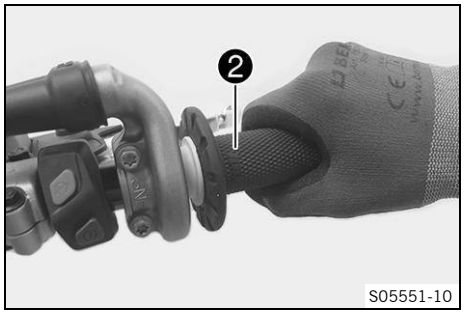

– Move throttle twist grip ❷ to where it is half open and hold in position.

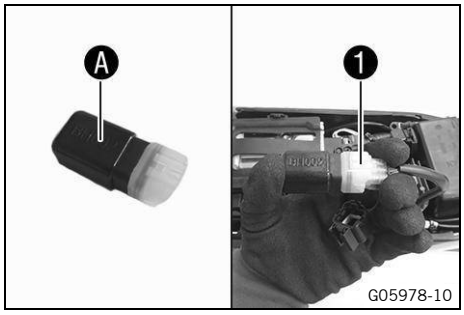

– Plug wake-up connector Ⓐ into diagnostics connector ❶.

Note
Wake-up connector Ⓐ is in the motorcycle's by pack.

– Wait for at least five seconds.
  ✓ The end positions of the exhaust control are read. The procedure is clearly audible.
  ✓ The dashboard illumination is activated, the combination switch lights up green.
– Release the fixing from the throttle grip.
  ✓ The end positions of the exhaust control are programmed.
– Wait until you can no longer hear the exhaust control engine operating.
– Disconnect wake-up connector Ⓐ from diagnostic connector ❶.

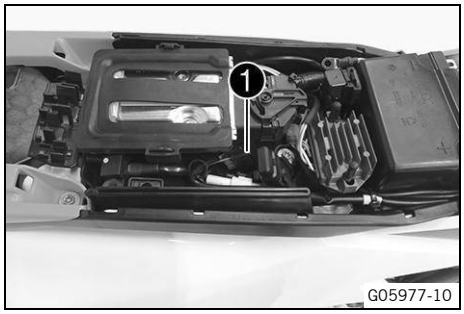

– Mount diagnostics connector ❶ on the holder.

Reworking

– Mount the seat. (p. 72)

17.1 Changing the mapping

Note
The desired engine characteristic can be altered using the combination switch.
Changing the mapping also affects the response of the exhaust control.
The setting most recently selected is activated again when restarting.
The mapping can also be changed during the ride.

– Select one of the following alternatives.

Activating STANDARD mapping

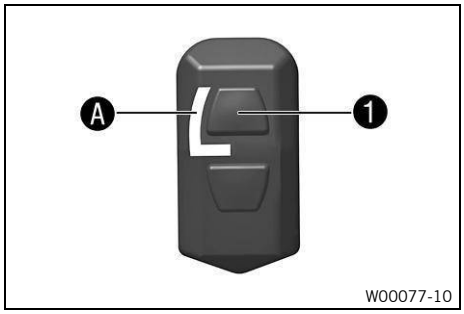

– Press button ❶.

Engine speed	< 4,000 rpm (< 66.67 Hz)

✓ Indicator light Ⓐ lights up.
✓ STANDARD: balanced response

Activating ADVANCED mapping

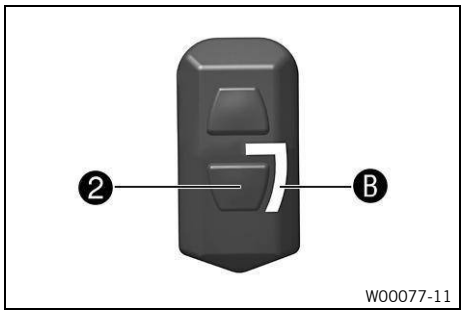

– Press button ❷.

Engine speed	< 4,000 rpm (< 66.67 Hz)

✓ Indicator light Ⓑ lights up.
✓ ADVANCED: direct response

17.2 Checking the play in the throttle cable

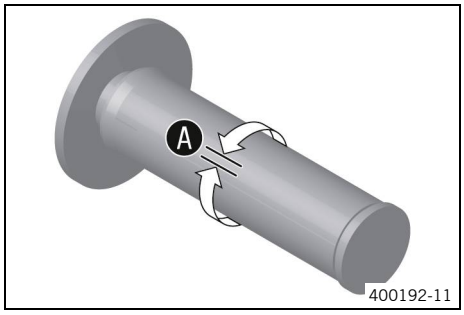

– Check the throttle grip for smooth operation.
– Move the handlebar to the straight-ahead position. Turn the throttle twist grip back and forth slightly and determine the play in throttle cable Ⓐ.

Throttle cable play	2 mm … 3 mm (0.08 in … 0.12 in)

» If the throttle cable play does not meet the specified value:
  – Adjust the throttle cable play. (p. 127)
– Press the cold start button in all the way to the stop.
✓ When the throttle twist grip is turned forward, the cold start button jumps back to the start position.
» If the cold start button does not return to its original position:
  – Adjust the throttle cable play. (p. 127)

DANGER

Danger of poisoning Exhaust gases are toxic and inhaling them may result in unconsciousness and death.

- Always ensure that there is sufficient ventilation when running the engine.
- Use suitable exhaust extraction when starting or running the engine in an enclosed space.

- Start the engine and let it run at idle speed. Move the handlebar back and forth over the entire steering range.

The idle speed must not change.

» If the idle speed changes:
  - Adjust the throttle cable play. (p. 127)

17.3 Adjusting the throttle cable play

Note

If the correct routing of the throttle cables has already been secured, the fuel tank does not need to be removed.

Preparatory work

- Remove the seat. (p. 71)
- Remove the fuel tank. (p. 78)
- Check the throttle cable routing. (p. 87)

Main work

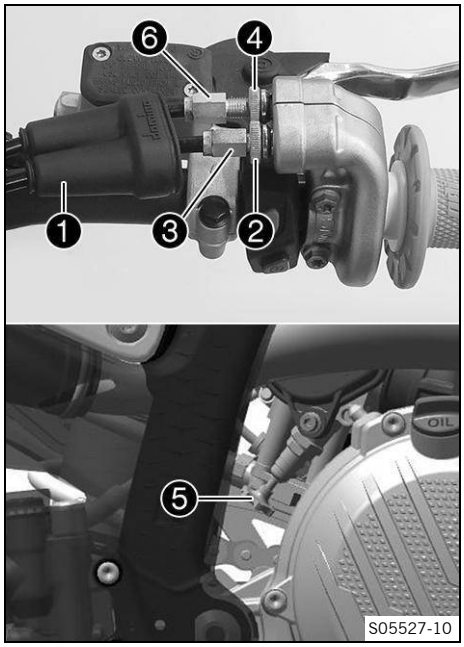

- Move the handlebar to the straight-ahead position.
- Push back boot ❶.
- Loosen nut ❷.
- Screw adjusting screw ❸ in as far as possible.
- Loosen nut ❹.
- Press cold start button ❺ all the way to the stop.
- Turn adjusting screw ❻ so that the cold start button moves to the basic position when the throttle twist grip is turned forward.
- Tighten nut ❹.
- Turn adjusting screw ❸ so that there is play in the throttle cable at the throttle twist grip.

Throttle cable play	2 mm … 3 mm (0.08 in … 0.12 in)

- Tighten nut ❷.
- Slide on boot ❶.
- Check the throttle grip for smooth operation.

Reworking

- Check the play in the throttle cable. (p. 126)
- Install the fuel tank. (p. 80)
- Mount the seat. (p. 72)

17.4 adjusting the idle speed

WARNING

Danger of accidents The engine may suddenly come to a halt if the idle speed is set too low.

- Set the idle speed to the specified value.

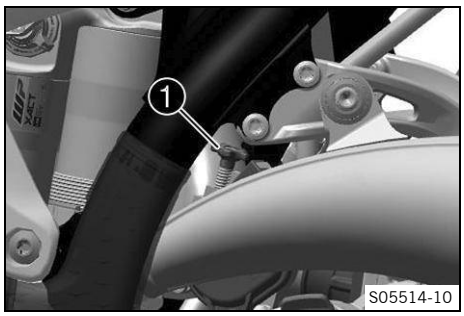

- Run the engine until warm.
- Check whether the cold start button has returned to its basic position.

DANGER

Danger of poisoning Exhaust gases are toxic and inhaling them may result in unconsciousness and death.

- Always ensure that there is sufficient ventilation when running the engine.
- Use suitable exhaust extraction when starting or running the engine in an enclosed space.

- Adjust the idle speed by turning idle speed adjusting screw ❶ using a suitable tachometer.

Make the adjustment in small steps.	
idle speed	1,500 rpm … 1,700 rpm (25.00 Hz … 28.33 Hz)

Note

Turning counterclockwise lowers the idle speed.

Turning clockwise increases the idle speed.

An incorrect idle speed can have a negative impact on overall engine running.

17.5 Checking the basic position of the gear shift lever

Note

When driving, the gear shift lever must not touch the rider's boot when in the basic position.

When the gear shift lever keeps touching the boot, the transmission will be subject to an excessive load.

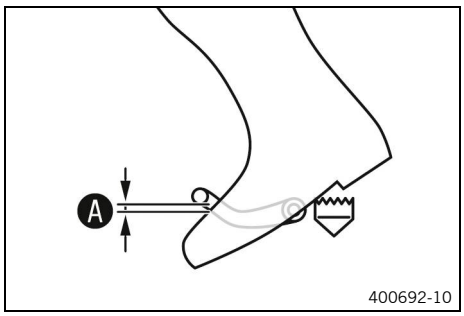

– Sit on the vehicle in the riding position and measure the distance A between the upper edge of your boot and the shift lever.

Distance between the gear shift lever and upper edge of boot	10 mm … 20 mm (0.39 in … 0.79 in)

» If the distance does not meet the specifications:
  – Adjust the basic position of the gear shift lever. (p. 129)

17.6 Adjusting the basic position of the gear shift lever

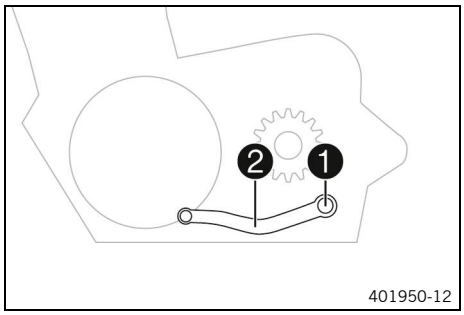

– Remove screw 1 with the washers and take off shift lever 2.

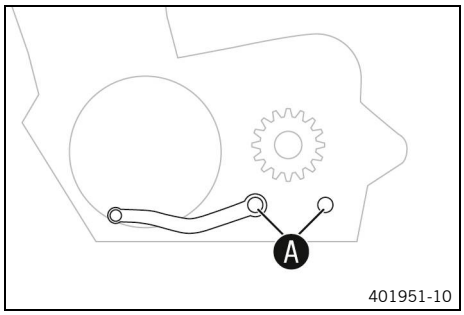

– Clean gear teeth A of the shift lever and shift shaft.
– Mount the gear shift lever on the shift shaft in the desired position and engage the toothing.

The gear shift lever must not come into contact with any other vehicle components during the shift procedure.

Note
The range of adjustment is limited.

– Mount and tighten screw 1 with washers.

Screw, shift lever	
M6	14 Nm (10.3 ft·lb$_f$) **Loctite® 243**

18.1 Changing the fuel screen

DANGER

Fire hazard Fuel is highly flammable.

The fuel in the fuel tank expands when warm and can escape if overfilled.

- Do not refuel the vehicle in the vicinity of open flames, glowing, or smoldering objects.
- Make sure that nobody smokes in the vicinity of the vehicle during the refueling process.
- Switch off the engine for refueling.
- Make sure that no fuel is spilled; particularly not on hot parts of the vehicle.
- If any fuel is spilled, wipe it up immediately.
- Do not overfill the fuel tank.

WARNING

Danger of poisoning Fuel is harmful to health.

- Do not allow fuel to come into contact with skin, eyes, or clothing.
- Consult a doctor immediately if fuel has been ingested.
- Do not inhale fuel vapors.
- Rinse the affected area immediately with plenty of water in the event of contact with skin.
- Rinse eyes thoroughly with water and consult a doctor immediately if fuel comes into contact with eyes.
- If fuel spills on to your clothing, change the clothing.
- Store fuel properly in a suitable container and keep out of the reach of children.

NOTE

Environmental hazard Improper handling of fuel is dangerous to the environment.

- Do not allow fuel to enter the groundwater, the soil, or the sewage system.

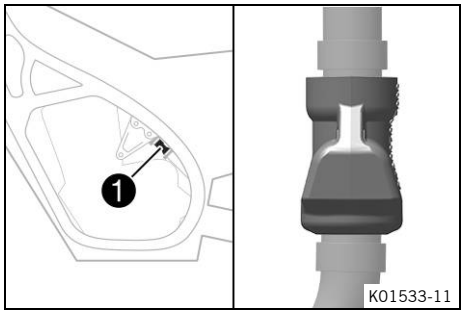

- Remove protection cap 1 of the fuel line.

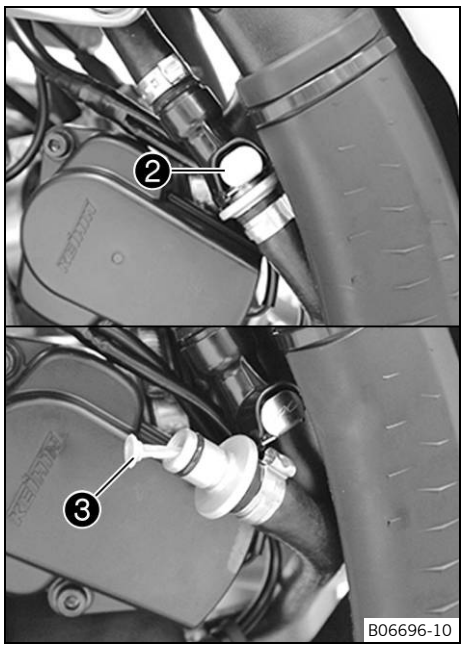

– Clean quick-lock coupling ❷ thoroughly with compressed air.

Dirt must not enter into the fuel line. Dirt in the fuel line clogs the injector!

– Disconnect the quick-lock coupling.

Note
Remaining fuel may flow out of the fuel hose.

– Pull fuel screen ❸ out of the connecting piece.
– Slide the new fuel screen all the way into the connecting piece.
– Spray silicone spray onto a lint-free cleaning cloth and lightly lubricate the O-ring of the quick-lock coupling.

Silicone spray (p. 162)

– Join quick-lock couplings.

DANGER
Danger of poisoning Exhaust gases are toxic and inhaling them may result in unconsciousness and death.
– Always ensure that there is sufficient ventilation when running the engine.
– Use suitable exhaust extraction when starting or running the engine in an enclosed space.

– Start the engine and check the response.
– Mount protection cap ❶ of the fuel line.

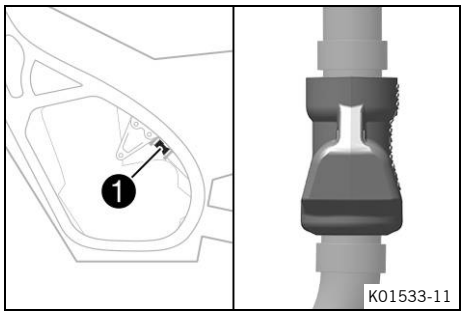

18.2 Checking the gear oil level

Condition: The engine is cold

Preparatory work
– Stand the motorcycle upright on a level surface.

Main work
– Detach the brake pedal spring.

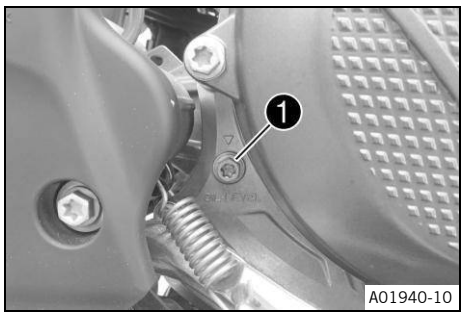

– Remove gear oil level monitoring screw ❶.
– Check the gear oil level.

A small amount of gear oil should run out of the bore.

» If no gear oil runs out:
  – Add gear oil. (p. 133)
– Mount and tighten the gear oil level check screw.

Screw, gear oil level check	
M6	8 Nm (5.9 ft·lb$_f$)

– Attach the brake pedal spring.

18.3 Changing the gear oil

WARNING

Danger of scalding Engine and gear oil heat up when the motorcycle is operated.
– Wear suitable protective clothing and safety gloves.
– In the event of scalding, rinse the area affected immediately with lukewarm water.

NOTE

Environmental hazard Hazardous substances cause environmental damage.
– Dispose of oils, grease, filters, fuel, cleaning agents, brake fluid, etc. correctly and in accordance with the applicable regulations.

Condition: Engine is at operating temperature

Preparatory work
– Park the motorcycle on a level surface.
– Position an appropriate container under the engine.

(All XC models)
– Remove the skid plate. (p. 59)

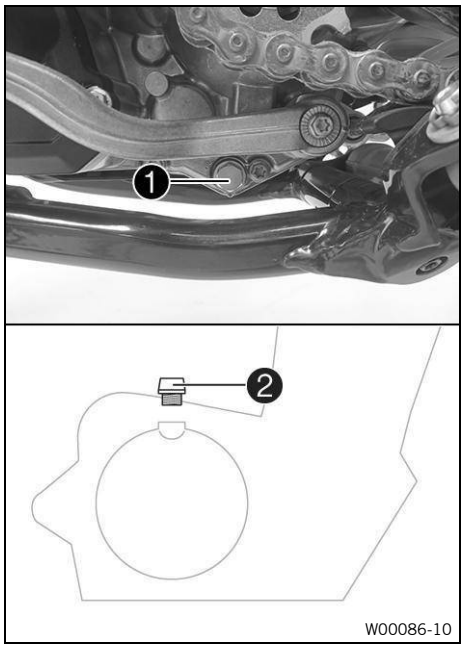

Main work

– Remove gear oil drain plug ❶ with magnet.
– Let the gear oil drain fully.
– Thoroughly clean the gear oil drain plug with magnet.
– Clean the sealing area on the engine.
– Mount and tighten gear oil drain plug ❶ with the magnet and a new seal ring.

Transmission drain plug with magnet	
M12×1.5	20 Nm (14.8 ft·lb$_f$)

– Remove filler plug ❷ with the O-ring, and fill up with gear oil.

gear oil	
Engine oil (15W/50) (p. 161) Partially synthetic	0.80 l (0.211 liq. gal$_{US}$)

– Mount and tighten filler plug ❷ together with the O-ring.

DANGER

Danger of poisoning Exhaust gases are toxic and inhaling them may result in unconsciousness and death.

– Always ensure that there is sufficient ventilation when running the engine.
– Use suitable exhaust extraction when starting or running the engine in an enclosed space.

– Start the engine and check it for leaks.

Reworking

– Check the gear oil level. (p. 131)

(All XC models)

– Install the skid plate. (p. 59)

18.4 Adding gear oil

Note

Too little gear oil or poor-quality oil results in premature wear to the transmission.
Gear oil must only be topped up when the engine is cold.

Condition: The engine is cold

Preparatory work

– Park the motorcycle on a level surface.

Main work

– Detach the brake pedal spring.

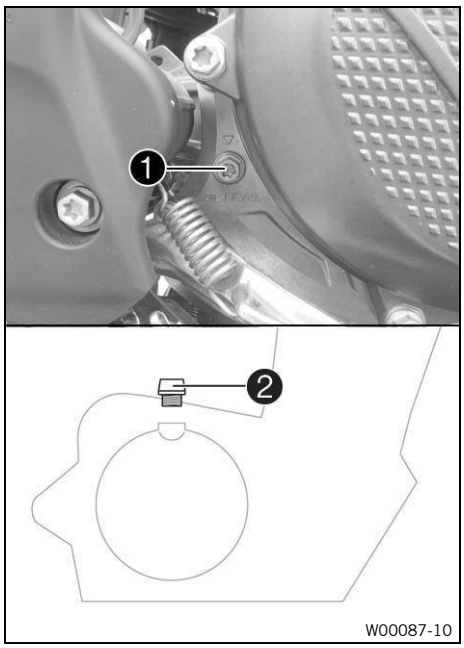

– Remove gear oil level monitoring screw ❶.
– Remove filler plug ❷ with the O-ring.
– Add gear oil until it emerges from the bore of the gear oil level check screw.

Engine oil (15W/50) (p. 161) Partially synthetic

– Mount and tighten the gear oil level check screw.

Screw, gear oil level check	
M6	8 Nm (5.9 ft·lb_f)

– Attach the brake pedal spring.
– Mount and tighten oil plug ❷ with O-ring.

Reworking

DANGER

Danger of poisoning Exhaust gases are toxic and inhaling them may result in unconsciousness and death.

– Always ensure that there is sufficient ventilation when running the engine.
– Use suitable exhaust extraction when starting or running the engine in an enclosed space.

– Start the engine and check it for leaks.

19.1 Cleaning the motorcycle

NOTE

Material damage Components can be damaged or destroyed if a high-pressure cleaner is used incorrectly.

The high pressure forces water into the electrical components, socket connectors, clutch cables, and bearings, etc.

Too high a pressure can cause malfunctions and destroy components.

– Do not direct the water jet directly on to electrical components, socket connectors, clutch cables, or bearings.
– Maintain a minimum distance between the nozzle of the high-pressure cleaner and the component.

Minimum distance	60 cm (23.6 in)

NOTE

Environmental hazard Hazardous substances cause environmental damage.

– Dispose of oils, grease, filters, fuel, cleaning agents, brake fluid, etc. correctly and in accordance with the applicable regulations.

Note

To maintain the value and appearance of the motorcycle over a long period, clean it regularly.

Avoid direct sunshine when cleaning the motorcycle.

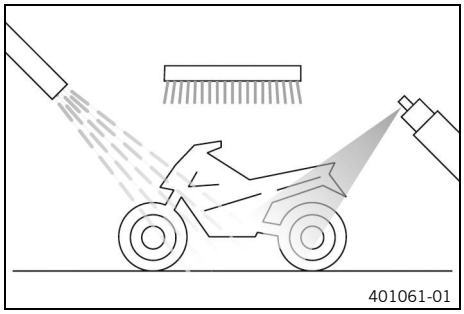

– Seal the exhaust system to prevent water from entering into it.
– Remove the coarse dirt particles with a gentle water jet.
– Spray the heavily soiled parts with a standard commercial motorcycle cleaner and clean using a brush.

Never apply motorcycle cleaner to a dry vehicle; always rinse the vehicle with water first.

Environmentally neutral universal cleaning agent
(p. 164)

Note

Use warm water containing standard motorcycle cleaner and a soft sponge.

– After rinsing the motorcycle with a gentle spray of water, allow it to dry thoroughly.
– Remove the cover from the exhaust system.

WARNING

Danger of accidents Moisture and dirt impair the brake system.

– Brake carefully several times to dry out and remove dirt from the brake pads and the brake discs.

– After cleaning, ride the vehicle a short distance until the engine warms up.

Note
The heat produced causes water to evaporate at inaccessible locations in the engine and on the brake system.

– After the motorcycle has cooled off, lubricate all moving parts and pivot points.
– Clean the chain. (p. 82)
– Treat bare metal (except for brake discs and the exhaust system) with an anticorrosive.

  Preserving materials (p. 164)

– Treat all plastic parts and powder-coated parts with a mild cleaning and care product.

  Cleaning agents for plastics, glass, lacquers, metals, windshields and visors (p. 164)

20.1 Storage

WARNING

Danger of poisoning Fuel is harmful to health.

- Do not allow fuel to come into contact with skin, eyes, or clothing.
- Consult a doctor immediately if fuel has been ingested.
- Do not inhale fuel vapors.
- Rinse the affected area immediately with plenty of water in the event of contact with skin.
- Rinse eyes thoroughly with water and consult a doctor immediately if fuel comes into contact with eyes.
- If fuel spills on to your clothing, change the clothing.
- Store fuel properly in a suitable container and keep out of the reach of children.

Note

If the vehicle will not be ridden for an extended period, additional steps are recommended.

Before storing the motorcycle, check all parts for function and wear. If service, repairs, or replacements are necessary, you should do this during the storage period (less overload of the authorized partner). This allows you to avoid long waiting periods when the next season starts.

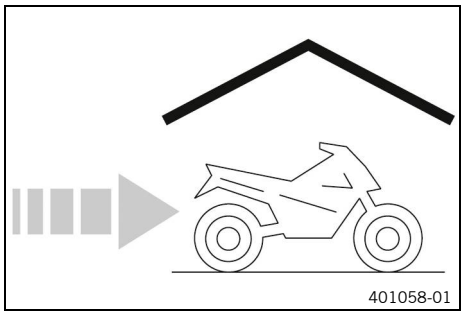

- Clean the motorcycle. (p. 135)
- Change the gear oil. (p. 132)
- Check the frost protection and coolant level. (p. 117)
- When refueling for the last time before taking the motorcycle out of service, add fuel additive.

Fuel additive (p. 160)

- Refuel. (p. 37)

Tip

Fill the fuel tank completely as specified, using fuel with the lowest possible ethanol content.

- Check the tire pressure. (p. 108)
- Remove the 12 V battery. (p. 110)
- Charge the 12 V battery. (p. 112)

Ideal charging and storage temperature of the lithium-ion battery	10 °C … 20 °C (50.0 °F … 68.0 °F)

- Store the vehicle in a dry location that is not subject to large fluctuations in temperature.

Note

KTM recommends jacking up the motorcycle.

- Raise the motorcycle with a lift stand. (p. 56)
- Cover the vehicle with a tarpaulin or similar cover that is permeable to air.

Cover the motorcycle with a tarp or cover that is permeable to air.
Do not use non-porous materials because they prevent humidity from escaping and thus cause corrosion.

Note

Avoid running the engine of a motorcycle in storage for a short time only. Because the engine will not warm up sufficiently, the water vapor produced during combustion will condense, causing engine parts and the exhaust system to rust.

20.2 Preparing for use after storage

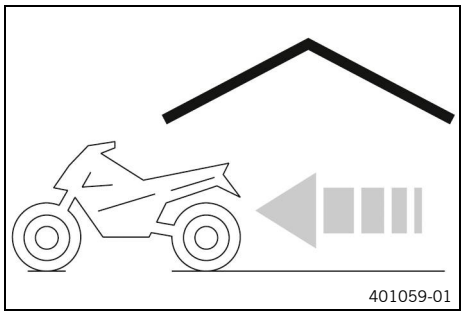

- Remove the motorcycle from the lift stand. (p. 56)
- Perform checks and maintenance measures when preparing for use. (p. 33)
- Take a test ride.

21.1 troubleshooting

Cause	Finding	Remedy
12 V battery discharged	The 12-V battery is not being charged by the alternator unwanted electrical load	– Check the charging voltage. – Check the alternator. – Check the open-circuit current.
Malfunction indicator lamp lights up or flashes	Malfunction in the electronic fuel injection	– Check wiring for damage and electrical plug-in connectors for corrosion and damage. – Read out the fault memory using the diagnostics tool.
Gear oil emerges from the vent hose	Too much gear oil added	– Check the gear oil level. (p. 131)
The engine turns but does not start	Operating error Quick-lock coupling not joined Idle speed is not set correctly Fuel supply interrupted Spark plug sooty or wet Plug gap of spark plug too wide Faulty ignition Short-circuit cable in wiring harness frayed, kill switch faulty Connector or ignition coil loose or oxidized Malfunction in the electronic fuel injection	– Carry out the starting procedure. (p. 33) – Join quick-lock couplings. – Adjust the idle speed. (p. 128) – Check the fuel tank vent. – Clean and dry the spark plug and spark plug connector, or change if necessary. – Adjust plug gap. Plug gap of spark plug: 0.60 mm (0.0236 in) – Check the ignition coil. – Check the spark plug connector. – Check the kill button. – Clean the connector and treat with contact spray. – Check wiring for damage and electrical plug-in connectors for corrosion and damage. – Read out the fault memory using the diagnostics tool.
The engine does not turn over (starter motor)	Operating error 12 V battery discharged Main fuse blown Starter relay defective Starter motor defective	– Carry out the starting procedure. (p. 33) – Charge the 12 V battery. (p. 112) – Check the charging voltage. – Check the open-circuit current. – Check the alternator. – Change the main fuse. (p. 114) – Check the starter relay. – Check the starter motor.
Engine does not speed up	Malfunction in the electronic fuel injection Faulty ignition	– Check wiring for damage and electrical plug-in connectors for corrosion and damage. – Read out the fault memory using the diagnostics tool. – Check the ignition coil.

Cause	Finding	Remedy
		– Check the spark plug connector.
The engine has no idle speed	Faulty spark plug Faulty ignition Idle speed is not set correctly	– Change the spark plug. – Check the ignition coil. – Check the spark plug connector. – Adjust the idle speed. (p. 128)
The engine dies during the trip	Lack of fuel The engine takes in false air Connector or ignition coil loose or oxidized	– Refuel. (p. 37) – Check that the intake manifold is firmly seated. – Clean the connector and treat with contact spray.
Engine overheats	Too little coolant in cooling system Too little air stream Radiator fins very dirty Foam formation in the cooling system Damaged cylinder head or cylinder head gasket Bent radiator hose Thermostat defective	– Check the transmission and cooling system for leaks. – Check the coolant level. (p. 118) – Switch off the engine when standing. – Clean the radiator fins. – Drain the coolant. (p. 119) – Refill the coolant. (p. 119) – Check the cylinder head and cylinder head gasket. – Change the radiator hose. – Check the thermostat. Opening temperature: 70 °C (158.0 °F)
Engine has too little power	Air filter is very dirty Fuel filter is very dirty Fuel screen is very dirty Malfunction in the electronic fuel injection Fuel supply interrupted Exhaust system leaks, deformed or too little damping material in the silencer Faulty ignition Damaged membrane or reed valve housing	– Clean the air filter and air filter box. (p. 75) – Change the fuel filter. – Change the fuel screen. (p. 130) – Check wiring for damage and electrical plug-in connectors for corrosion and damage. – Read out the fault memory using the diagnostics tool. – Check the fuel tank vent. – Check exhaust system for damage. – Change the damping material on the main silencer. (p. 78) – Check the ignition coil. – Check the spark plug connector. – Check the membrane and reed valve housing.
Water in the gear oil	Damaged radial shaft seal ring or water pump	– Check the radial shaft seal ring and the water pump.
White smoke development (steam in the exhaust gas)	Damaged cylinder head or cylinder head gasket	– Check the cylinder head and cylinder head gasket.

22.1 Flash codes

Blink code for malfunction indicator light	Fi Malfunction indicator light lights up
Error level condition	Power relay – circuit fault Tilt sensor – input signal too low Signal voltage: ≤ 0.2 V Signal voltage: 3.7 V … 4.6 V Tilt sensor – input signal too high Voltage: ≥ 4.8 V

Blink code for malfunction indicator light	Fi 02: Malfunction indicator light flashes 2x short
Error level condition	Crankshaft speed sensor – synchronization faulty Time: ≥ 1 s Crankshaft position sensor - too many impulses Time: ≥ 0.1 s Time: ≥ 0.1 s Time: ≥ 0.16 s

Blink code for malfunction indicator light	Fi 06: Malfunction indicator light flashes 6x short
Error level condition	Throttle valve position sensor circuit A - adaption failed Throttle valve position sensor circuit A – input signal too low Voltage: ≤ 0.2 V Time: ≥ 0.08 s Throttle valve position sensor circuit A – input signal too high Voltage: ≥ 4.7 V Time: ≥ 0.08 s

Blink code for malfunction indicator light	Fi 09: Malfunction indicator light flashes 9x short
Error level condition	Crankcase pressure sensor - short circuit to ground Voltage: ≤ 0.4 V Time: ≥ 0.1 s Crankcase pressure sensor - open/short circuit to plus Voltage: ≥ 4.6 V Time: ≥ 0.1 s Ambient air pressure sensor - short circuit to ground Ambient air pressure sensor voltage: ≤ 0.4 V Time: ≥ 1 s Ambient air pressure sensor - short circuit to plus Ambient air pressure sensor voltage: ≥ 4.6 V Time: ≥ 0.1 s

Blink code for malfunction indicator light	Fi 12: Malfunction indicator light flashes 1x long, 2x short
Error level condition	Coolant temperature sensor – input signal too low Voltage: ≤ 0.1 V Time: ≥ 3 s Coolant temperature sensor – input signal too high Voltage: ≥ 4.8 V Time: ≥ 3 s Coolant temperature sensor – electric circuit open

Blink code for malfunction indicator light	Fi 13: Malfunction indicator light flashes 1x long, 3x short
Error level condition	Intake air temperature sensor – input signal too low Voltage: ≤ 0.2 V Time: ≥ 3 s Intake air temperature sensor – input signal too high Voltage: ≥ 4.8 V Time: ≥ 3 s Intake air temperature sensor – electric circuit open

Blink code for malfunction indicator light	Fi 14: Malfunction indicator light flashes 1x long, 4x short
Error level condition	Crankcase pressure sensor – difference too high between sensor and engine control unit

Blink code for malfunction indicator light	Fi 21: Malfunction indicator light flashes 2x long, 1x short
Error level condition	Battery voltage - input voltage too low Engine control unit power supply: ≤ 9.9 V Time: ≥ 1 s Battery voltage – input voltage too high Engine control unit power supply: ≥ 16.10 V Time: ≥ 1 s

Blink code for malfunction indicator light	Fi 33: Malfunction indicator lamp flashes 3x long, 3x short
Error level condition	Injection valve 1, cylinder 1 – input signal too low Time: ≥ 1 s Injection valve 1, cylinder 1 – input signal too high Time: ≥ 1 s

Blink code for malfunction indicator light	Fi 34: Malfunction indicator lamp flashes 3x long, 4x short
Error level condition	Injection valve 2, cylinder 1 – input signal too low Time: ≥ 1 s Injection valve 2, cylinder 1 – input signal too high Time: ≥ 1 s

Blink code for malfunction indicator light	Fi 37: Malfunction indicator light flashes 3x long, 7x short
Error level condition	Ignition coil – circuit fault Time: ≥ 2.0 s

Blink code for malfunction indicator light	Fi 41: Malfunction indicator light flashes 4x long, 1x short
Error level condition	Fuel pump - short circuit to ground/open circuit The engine is switched off: ≥ 0.4 s Fuel pump – short circuit to plus The engine is switched off: ≥ 0.4 s

Blink code for malfunction indicator light	Fi 50: Malfunction indicator light flashes 5x long
Error level condition	Exhaust control actuator – no signal Exhaust control actuator – temperature too high Exhaust control actuator – incorrect setting Exhaust control actuator – setpoint value signal faulty Exhaust control actuator – input signal too low Exhaust control actuator – input signal too high Exhaust control actuator – mechanical error in the lower position Exhaust control actuator – mechanical error in the upper position Exhaust control actuator – mechanical error

Blink code for malfunction indicator light	Fi 53: Malfunction indicator light flashes 5x long, 3x short
Error level condition	Sensor voltage 1 – open circuit/short circuit to ground Sensor voltage 1 – short circuit to plus

Blink code for malfunction indicator light	Fi 54: Malfunction indicator light flashes 5x long, 4x short
Error level condition	Sensor voltage 2 – open circuit/short circuit to ground Sensor voltage 2 – short circuit to plus

23.1 Engine

23.1.1 Technical data - engine

Design	Single-cylinder 2-stroke engine, liquid-cooled, with diaphragm intake and exhaust control
Displacement	
(All 250 models)	249 cm³ (15.19 in³)
(All 300 models)	293.15 cm³ (17.8891 in³)
Stroke	72 mm (2.83 in)
Bore	
(All 250 models)	66.4 mm (2.614 in)
(All 300 models)	72 mm (2.83 in)
idle speed	1,500 rpm … 1,700 rpm (25.00 Hz … 28.33 Hz)
Crankshaft bearing	1 grooved ball bearing, 1 roller bearing
Big (bottom) end bearing	Needle bearing
Wrist pin bearing	Needle bearing
Piston	Cast aluminum
Piston rings	
(All 250 models)	2 half keystone rings
(All 300 models)	2 rectangular rings
X-dimension (upper edge of piston to special tool)	0 mm … 0.10 mm (0 in … 0.0039 in)
Z dimension (height of control flap)	47.7 mm … 48.0 mm (1.878 in … 1.890 in)
Primary transmission	26:72
Clutch	Multi-disc wet clutch / hydraulically activated
Transmission	
(All SX models)	5 speed transmission, claw shifted
(All XC models)	6 speed transmission, claw shift
Gear ratios **(All SX models)**	
1st gear	2:28 PM
2nd Gear	16:26
3rd Gear	18:24
4th Gear	21:24
5th Gear	22:21
Gear ratios **(All XC models)**	
1st gear	13:33
2nd Gear	16:30
3rd Gear	18:26

4th Gear	22:26
5th Gear	23:23
6th Gear	26:22
Ignition system	Electronic ignition
Spark plug	NGK BR 8 ES
Plug gap of spark plug	0.60 mm (0.0236 in)
Starting aid	Electric starter

23.1.1.1 Capacities - engine

gear oil	
Engine oil (15W/50) (p. 161) Partially synthetic	0.80 l (0.211 liq. gal_{US})
Coolant	
Coolant (p. 163) Antifreeze protection to at least: −25 °C (−13.0 °F)	0.95 l (0.251 liq. gal_{US})

23.2 Chassis

23.2.1 Technical data - chassis

Frame	Central tube frame made of chrome molybdenum steel tubing
Fork **(All SX models)**	**WP XACT AER**
Fork **(All XC models)**	**WP XPLOR CC**
Suspension travel: **(All SX models)**	
front	310 mm (12.20 in)
rear	300 mm (11.81 in)
Suspension travel: **(All XC models)**	
front	300 mm (11.81 in)
rear	300 mm (11.81 in)
Triple clamp offset	22 mm (0.87 in)
Shock absorber **(All SX models)**	**WP XACT LDS**
Shock absorber **(All XC models)**	**WP XACT LDS**
Brake system	Disc brakes, floating brake calipers
Brake discs - diameter	
front	260 mm (10.24 in)
rear	220 mm (8.66 in)
Brake disc wear limit	

front	2.5 mm (0.098 in)
rear	3.5 mm (0.138 in)
Off-road tire pressure	
front	1.0 bar (14.5 psi)
rear	1.0 bar (14.5 psi)
Final drive	
(250 SX)	14:49
(250 XC)	14:50
(300 SX)	14:47
(300 XC)	14:48
Chain	5/8 x 1/4"
Rear sprockets available	• 47 • 48 • 49 • 50
Steering head angle	63.9° (1.115 rad)
Wheelbase	1,493 ±10 mm (58.78 ±0.39 in)
Seat Height unloaded	958 mm (37.72 in)
Ground clearance unloaded	354 mm (13.94 in)
Weight without fuel approx.	
(All SX models)	99.4 kg (219.14 lb)
(All XC models)	103 kg (227.1 lb)
Maximum permissible front axle load	145 kg (319.7 lb)
Maximum permissible rear axle load	190 kg (418.9 lb)
Maximum permissible total weight	335 kg (738.5 lb)

23.2.2 Technical data - tires

Validity	Tire front	Rear tire
(All SX models)	**80/100 - 21 51M TT** Dunlop GEOMAX MX34F	**110/90 - 19 62M TT** Dunlop GEOMAX MX34
(All XC models)	**80/100 - 21 51M TT** Dunlop GEOMAX AT82F	**110/100 - 18 64M TT** Dunlop GEOMAX AT82

Validity	Tire front	Rear tire
The tires specified represent one of the possible series production tires. For alternative manufacturers, if any, contact an authorized manufacturer or qualified tire dealership. If local road approval regulations apply, these and the respective technical specifications must be observed.		

23.2.3 Capacities - vehicle

Total fuel tank capacity, approx. **(All SX models)**	
Super unleaded (95 octane) mixed with 2-stroke engine oil (1:60) (p. 161)	7.2 l (1.90 liq. gal_{US})
Total fuel tank capacity, approx. **(All XC models)**	
Super unleaded (95 octane) mixed with 2-stroke engine oil (1:60) (p. 161)	8.5 l (2.25 liq. gal_{US})

23.3 Electrics

23.3.1 Battery

12-V battery	HJTZ5S-FP-C	Lithium-ion battery Battery voltage: 12 V Nominal capacity: 2.0 Ah Maintenance-free

23.3.2 Fuses

Fuse	58011109105	5 A
Fuse	58011109110	10 A

23.4 Fork

23.4.1 Technical data - fork (All SX models)

Fork part number	A460C103Y406000

Fork	**WP XACT AER**
Compression damping	
Comfort	17 clicks
Standard	12 clicks
Sport	7 clicks
Rebound damping	
Comfort	23 clicks
Standard	18 clicks
Sport	13 clicks
Air pressure	
Weight of rider: 65 kg … 75 kg (143.3 lb … 165.3 lb)	10 bar (145 psi)

Weight of rider: 75 kg … 85 kg (165.3 lb … 187.4 lb)	10.2 bar (147.9 psi)
Weight of rider: 85 kg … 95 kg (187.4 lb … 209.4 lb)	10.4 bar (150.8 psi)
Fork length	950 mm (37.40 in)

23.4.2 Capacities - fork (All SX models)

Oil capacity, left outer assembly	
Fork oil (48601166S1) (SAE 4) (p. 161)	240 ml (8.12 fl. oz_{US})
Oil capacity, right outer assembly	
Fork oil (48601166S1) (SAE 4) (p. 161)	240 ml (8.12 fl. oz_{US})
Grease capacity, left cartridge	
Special grease (00062010053) (p. 162)	5 g (0.18 oz)
Oil capacity, right cartridge	
Fork oil (48601166S1) (SAE 4) (p. 161)	380 ml (12.85 fl. oz_{US})

23.4.3 Technical data - fork (All XC models)

Fork part number	A590C173Y402000

Fork	**WP XPLOR CC**
Compression damping	
Comfort	17 clicks
Standard	12 clicks
Sport	7 clicks
Rebound damping	
Comfort	23 clicks
Standard	18 clicks
Sport	13 clicks
Fork length	940 mm (37.01 in)
Spring rate	
Rider's weight: 65 kg … 75 kg (143.3 lb … 165.3 lb)	4.4 N/mm (25.12 lb_f/in)
Rider's weight: 75 kg … 85 kg (165.3 lb … 187.4 lb)	4.6 N/mm (26.27 lb_f/in)
Rider's weight: 85 kg … 95 kg (187.4 lb … 209.4 lb)	4.8 N/mm (27.41 lb_f/in)
Spring length with preload spacer(s)	478 mm (18.82 in)

23.4.4 Capacities - fork (All XC models)

Oil capacity, outer assembly	
Fork oil (48601166S1) (SAE 4) (p. 161)	390 ml (13.19 fl. oz_{US})
Oil capacity, cartridge	
Fork oil (48601166S1) (SAE 4) (p. 161)	175 ml (5.92 fl. oz_{US})

23.5 Shock absorber

23.5.1 Technical data - shock absorber (All SX models)

Shock absorber part number	A460C403Y408000

Shock absorber	**WP XACT LDS**
Low-speed compression damping	
Comfort	17 clicks
Standard	15 clicks
Sport	13 clicks
High-speed compression damping	
Comfort	2 turns (720°)
Standard	1.5 turns (540°)
Sport	1 turn (360°)
Rebound damping	
Comfort	17 clicks
Standard	15 clicks
Sport	13 clicks
Preload	8 mm (0.31 in)
Spring rate	
Weight of rider: 65 kg … 75 kg (143.3 lb … 165.3 lb)	42 N/mm (239.8 lb_f/in)
Weight of rider: 75 kg … 85 kg (165.3 lb … 187.4 lb)	45 N/mm (257.0 lb_f/in)
Weight of rider: 85 kg … 95 kg (187.4 lb … 209.4 lb)	48 N/mm (274.1 lb_f/in)
Spring length	240 mm (9.45 in)
Gas assisted	10 bar (145 psi)
Static sag	35 mm (1.38 in)
Rider sag	105 mm (4.13 in)

Installation position	456.3 mm (17.965 in)

23.5.2 Technical data - shock absorber (All XC models)

Shock absorber part number	A460C473Y408000

Shock absorber	**WP XACT LDS**
Low-speed compression damping	
Comfort	17 clicks
Standard	15 clicks
Sport	13 clicks
High-speed compression damping	
Comfort	2 turns (720°)
Standard	1.5 turns (540°)
Sport	1 turn (360°)
Rebound damping	
Comfort	17 clicks
Standard	15 clicks
Sport	13 clicks
Preload	8 mm (0.31 in)
Spring rate	
Weight of rider: 65 kg … 75 kg (143.3 lb … 165.3 lb)	42 N/mm (239.8 lb_f/in)
Weight of rider: 75 kg … 85 kg (165.3 lb … 187.4 lb)	45 N/mm (257.0 lb_f/in)
Weight of rider: 85 kg … 95 kg (187.4 lb … 209.4 lb)	48 N/mm (274.1 lb_f/in)
Spring length	240 mm (9.45 in)
Gas assisted	10 bar (145 psi)
Static sag	35 mm (1.38 in)
Rider sag	105 mm (4.13 in)
Installation position	456.3 mm (17.965 in)

23.6 Tightening torque

23.6.1 Engine tightening torques

Detent arm screw M5	6 Nm (4.4 ft·lb$_f$) **Loctite® 243**
Actuator screw M5	5 Nm (3.7 ft·lb$_f$) **Loctite® 243**
Actuator cover screw M5	5 Nm (3.7 ft·lb$_f$) **Loctite® 243**
Exhaust control flap screw M5	8 Nm (5.9 ft·lb$_f$) **Loctite® 243**
Screw, bearing retaining bracket M5	6 Nm (4.4 ft·lb$_f$) **Loctite® 243**
Screw, retaining bracket of exhaust control M5	6 Nm (4.4 ft·lb$_f$) **Loctite® 2701**
Control unit cover screw M5	6 Nm (4.4 ft·lb$_f$)
Screw, clutch spring retainer M5	6 Nm (4.4 ft·lb$_f$)
Screw, crankshaft position sensor M5	6 Nm (4.4 ft·lb$_f$) **Loctite® 243**
Main shaft exhaust control screw M5	8 Nm (5.9 ft·lb$_f$) **Loctite® 243**
Nut, axle for control flap M5	5 Nm (3.7 ft·lb$_f$)
Stator screw M5	6 Nm (4.4 ft·lb$_f$) **Loctite® 243**
Screw, intake manifold / diaphragm housing M6	6 Nm (4.4 ft·lb$_f$)
Screw, gear oil level check M6	8 Nm (5.9 ft·lb$_f$)
Shift star screw M6	10 Nm (7.4 ft·lb$_f$) **Loctite® 243**
Screw, shift lever M6	14 Nm (10.3 ft·lb$_f$) **Loctite® 243**
Screw, water pump cover M6	10 Nm (7.4 ft·lb$_f$)

Screw, ignition cover M6	8 Nm (5.9 ft·lb$_f$)
Nut, water pump impeller M6	5 Nm (3.7 ft·lb$_f$) **Loctite® 243**
Screw, outer clutch cover M6	8 Nm (5.9 ft·lb$_f$)
Screw, inner clutch cover M6	10 Nm (7.4 ft·lb$_f$)
Screw, starter motor M6	10 Nm (7.4 ft·lb$_f$)
Screw, starter motor cover M6	8 Nm (5.9 ft·lb$_f$)
Screw, engine case M6	10 Nm (7.4 ft·lb$_f$)
Screw, intermediate flange M6	10 Nm (7.4 ft·lb$_f$)
Cylinder head bleed screw M6	8 Nm (5.9 ft·lb$_f$)
Screw, balancer shaft M8	30 Nm (22.1 ft·lb$_f$) **Loctite® 243**
Screw, cylinder head M8	27 Nm (19.9 ft·lb$_f$)
Nut, cylinder base M10	35 Nm (25.8 ft·lb$_f$)
Screw, drive chain front sprocket M10	60 Nm (44.3 ft·lb$_f$) **Loctite® 2701**
Stud, cylinder base M10	12 Nm (8.9 ft·lb$_f$)
Nut, crankshaft M12LH×1	60 Nm (44.3 ft·lb$_f$)
Transmission drain plug with magnet M12×1.5	20 Nm (14.8 ft·lb$_f$)
Spark plug M14×1.25	25 Nm (18.4 ft·lb$_f$)
Nut, inner clutch hub M18×1.5	100 Nm (73.8 ft·lb$_f$) **Loctite® 243**
Nut, primary gear M18LH×1.5	150 Nm (110.6 ft·lb$_f$) **Loctite® 243**
Screw, reed valve support plate **EJOT DELTA PT®** – 30×12	1 Nm (0.7 ft·lb$_f$)
Screw, outer membrane sheets **EJOT DELTA PT®** – 30×6	1 Nm (0.7 ft·lb$_f$)

Screw, inner membrane sheets **EJOT DELTA PT®** – 35×25	1 Nm (0.7 ft·lb$_f$)
Screw, pressure sensor **EJOT PT®** – K60×20 – AL	2.5 Nm (1.84 ft·lb$_f$)

23.6.2 Chassis tightening torques

Radiator hose clamp	2.4 Nm (1.77 ft·lb$_f$)
Hose clip, inlet sleeve to throttle valve body	2.8 Nm (2.07 ft·lb$_f$)
Screw, fixed grip M4×12	5 Nm (3.7 ft·lb$_f$) **Loctite® 243**
Screw, hose clamp, throttle body M4	5 Nm (3.7 ft·lb$_f$)
Screw, throttle valve position sensor cover M4	2.1 Nm (1.55 ft·lb$_f$)
Remaining screws on chassis M5	5 Nm (3.7 ft·lb$_f$)
Remaining nuts on chassis M5	5 Nm (3.7 ft·lb$_f$)
Screw, battery terminal M5×12	2.5 Nm (1.84 ft·lb$_f$)
Screw, shock absorber adjusting ring M5×20	5 Nm (3.7 ft·lb$_f$)
Screw, frame protector M5×10	3 Nm (2.2 ft·lb$_f$)
Screw, throttle body cover M5	2.6 Nm (1.92 ft·lb$_f$)
Screw, throttle valve position sensor M5	3.5 Nm (2.58 ft·lb$_f$)
Nut, throttle cable on throttle body M6	3 Nm (2.2 ft·lb$_f$)
Remaining nuts on chassis M6	10 Nm (7.4 ft·lb$_f$)
Remaining screws on chassis M6	10 Nm (7.4 ft·lb$_f$)
Screw, rear brake disc M6×13	14 Nm (10.3 ft·lb$_f$) **Loctite® 243**
Screw, front brake disc M6×13	14 Nm (10.3 ft·lb$_f$) **Loctite® 243**
Screw, throttle twist grip M6×20	5 Nm (3.7 ft·lb$_f$)

Screw, chain slider guard M6×16	6 Nm (4.4 ft·lb$_f$) **Loctite® 243**
Screw, ball joint of push rod on brake cylinder M6×20	10 Nm (7.4 ft·lb$_f$) **Loctite® 243**
Screw, fuel tank spoiler on radiator M6×12	6 Nm (4.4 ft·lb$_f$)
Front brake lever screw M6	5 Nm (3.7 ft·lb$_f$)
Screw, chain guide on swingarm, rear M6×16	10 Nm (7.4 ft·lb$_f$) **Loctite® 243**
Screw, chain guide on swingarm, front M6×45	10 Nm (7.4 ft·lb$_f$) **Loctite® 243**
Screw, fender M6×16	12 Nm (8.9 ft·lb$_f$)
Screw, connector support incl. dashboard M6×15	5 Nm (3.7 ft·lb$_f$)
Brake line guide screw on swingarm M6×16	4.5 Nm (3.32 ft·lb$_f$) **Loctite® 243**
Screw, seat installation M6×25	8 Nm (5.9 ft·lb$_f$)
Screw, battery holding bracket M6×12	6 Nm (4.4 ft·lb$_f$)
Screw, ground wire on frame M6×13	10 Nm (7.4 ft·lb$_f$)
Screw, starter cable to starter relay M6	6 Nm (4.4 ft·lb$_f$)
Nut, starter cable on starter motor M6	4 Nm (3.0 ft·lb$_f$)
Nut, rear sprocket screw M8	35 Nm (25.8 ft·lb$_f$) **Loctite® 2701**
Nut, rim lock M8	12 Nm (8.9 ft·lb$_f$)
Remaining nuts on chassis M8	25 Nm (18.4 ft·lb$_f$)
Remaining screws on chassis M8	25 Nm (18.4 ft·lb$_f$)
Screw, front brake caliper M8×30	25 Nm (18.4 ft·lb$_f$) **Loctite® 243**
Screw, top triple clamp M8×40	17 Nm (12.5 ft·lb$_f$)

Screw, bottom triple clamp M8×50	12 Nm (8.9 ft·lb$_f$)
Screw, fork shoe M8×25	15 Nm (11.1 ft·lb$_f$)
Screw, upper steering stem M8×25	20 Nm (14.8 ft·lb$_f$) **Loctite® 243**
Screw, chain slider M8×20	15 Nm (11.1 ft·lb$_f$)
Screw, manifold M8×30	15 Nm (11.1 ft·lb$_f$)
Screw, handlebar clamp on handlebar mount M8×25	20 Nm (14.8 ft·lb$_f$)
Screw, subframe, top M8×15	35 Nm (25.8 ft·lb$_f$) **Loctite® 243**
Screw, subframe, bottom M8×18	30 Nm (22.1 ft·lb$_f$) **Loctite® 2701**
(All XC models) Screw, side stand attachment M8×26	33 Nm (24.3 ft·lb$_f$) **Loctite® 2701**
Screw, front sprocket cover on swingarm M8×25	15 Nm (11.1 ft·lb$_f$)
Screw, engine brace on frame M8×15	25 Nm (18.4 ft·lb$_f$) **Loctite® 2701**
Engine bracket screw M10	60 Nm (44.3 ft·lb$_f$)
Remaining nuts on chassis M10	45 Nm (33.2 ft·lb$_f$)
Remaining screws on chassis M10	45 Nm (33.2 ft·lb$_f$)
Top shock absorber screw M10×52	60 Nm (44.3 ft·lb$_f$) **Loctite® 2701**
Bottom shock absorber screw M10×52	60 Nm (44.3 ft·lb$_f$) **Loctite® 2701**
Screw, handlebar mount on triple clamp M10×50	40 Nm (29.5 ft·lb$_f$) **Loctite® 243**
Coolant temperature sensor M10×1.25	10 Nm (7.4 ft·lb$_f$)
Screw, brake pedal on frame M10	45 Nm (33.2 ft·lb$_f$)

Screw, sprocket M10×18	60 Nm (44.3 ft·lb$_f$) **Loctite® 2701**
Nut, frame on linkage lever M14×1.5	60 Nm (44.3 ft·lb$_f$)
Nut, angle lever to link fork M14×1.5	60 Nm (44.3 ft·lb$_f$)
Nut, swingarm pivot M16×1.5	100 Nm (73.8 ft·lb$_f$)
Nut, linkage lever on angle lever M16×1.5	80 Nm (59.0 ft·lb$_f$)
Screw, wheel spindle, front M20×1.5	35 Nm (25.8 ft·lb$_f$)
Screw, top steering head M20×1.5	12 Nm (8.9 ft·lb$_f$)
Nut, wheel spindle, rear M22×1.5	80 Nm (59.0 ft·lb$_f$)
Screw-in nozzle, cooling system M24×1.5	7.5 Nm (5.53 ft·lb$_f$)
Spoke nipple, rear wheel M4,5	6 Nm (4.4 ft·lb$_f$)
Spoke nipple, front wheel M4,5	6 Nm (4.4 ft·lb$_f$)
Combination switch screw **EJOT PT®** – K50×18	2 Nm (1.5 ft·lb$_f$)
Screw, intake air temperature sensor **EJOT PT®** – K50×18	0.7 Nm (0.52 ft·lb$_f$)
Screw, start button/kill switch **EJOT PT®** – K50×18	2 Nm (1.5 ft·lb$_f$)
Remaining screws on chassis **EJOT PT®** – K60×25	2 Nm (1.5 ft·lb$_f$)
Screw, air filter box, on subframe **EJOT PT®** – K60×20	5 Nm (3.7 ft·lb$_f$)
Screw, fuel pump on fuel tank **EJOT PT®** – K60×30	2.5 Nm (1.84 ft·lb$_f$)

24.1 Recycling

I02045-10

Further information is available at the following website.
Recycling information website: https://www.quefairedemesdechets.fr

A Technical terms

OBD	On-board diagnosis	Vehicle system, which monitors the specified parameters of the vehicle electronics

B Fuels

Fuel additive

Recommended supplier
MOTOREX®
• FUEL STABILIZER

C Operating supplies

Off-road chain spray

Recommended supplier

MOTOREX®

- **CHAINLUBE OFF ROAD**

Fork oil

Order details

- 48601166S1

Standards

• SAE 4	→ SAE

Universal oil spray

Recommended supplier

MOTOREX®

- **JOKER 440 SYNTHETIC**

Super unleaded (95 octane) mixed with 2-stroke engine oil

Standards

→ DIN EN 228

• 1:60	→ JASO FD

Mixture ratio

1:60

- 2-stroke engine oil
- Super unleaded

Long-life grease

Recommended supplier

MOTOREX®

- **Bike Grease 2000**

Engine oil

Recommended supplier

MOTOREX®

- **TOP SPEED 4T**

Standards

→ JASO T903 MA2

- 15W/50 → SAE

Properties

- Partially synthetic

2-stroke engine oil

Recommended supplier

MOTOREX®

- **CROSS POWER 2T**

Standards

→ JASO FD

Properties

- fully synthetic

High viscosity grease

Recommended supplier

SKF®

- **LGHB 2**

Silicone spray

Recommended supplier

MOTOREX®

- **SILICONE SPRAY**

Special grease

Order details

- 00062010053

Recommended supplier

Klüber Lubrication®

- **Klüberfood NH1 34–401**

Oil for foam air filter

Recommended supplier

MOTOREX®

- **RACING BIO AIR FILTER OIL**

Brake fluid DOT 5.1

Recommended supplier
MOTOREX® • **BRAKE FLUID DOT 5.1**
Standards
→ DOT

Coolant

Recommended supplier	
MOTOREX® • **COOLANT M3.0**	
Properties	
• Antifreeze protection to at least	−25 °C (−13.0 °F)

D Cleaning agents

Chain cleaner

Recommended supplier

MOTOREX®

- **CHAIN CLEAN**

Preserving materials

Recommended supplier

MOTOREX®

- **MOTO PROTECT**

Air filter cleaning agent

Recommended supplier

MOTOREX®

- **RACING BIO AIR FILTER CLEANER**

Cleaning agents for plastics, glass, lacquers, metals, windshields and visors

Recommended supplier

MOTOREX®

- **QUICK CLEANER**

Environmentally neutral universal cleaning agent

Recommended supplier

MOTOREX®

- **MOTO CLEAN UNIVERSAL**

E Icons

E.1 Symbol colors

E.1.1 Yellow and orange symbols

Yellow and orange symbols indicate a malfunction status that requires prompt intervention. Active driving aids are also represented by yellow or orange symbols.

Fi	Failure indicator lamp lights up or flashes red

E.1.2 Green and white symbols

Green and white symbols convey information.

	Indicator light Ⓐ lights up white
	Indicator light Ⓑ lights up green

1

12 V battery
charging 112
removing 110

12 V battery
installation 111
starting power 29

A

Accessories 14

Air filter
cleaning 75
installing 76
removing 75

Air filter box
cleaning 75

Air filter box cover
installing 73
preparing for securing 77
removing 73

Air suspension XACT 49

Auxiliary substances 14

B

Brake discs
checking 92

Brake fluid
adding front brake 94
adding to rear brake 100

Brake fluid level
checking on front brake 93
checking on rear brake 99

Brake lining retainers
checking on front brake 95
checking on rear brake 101

Brake linings (brake pads)
changing on the rear brake 101

Brake pad
checking on front brake 95

Brake pads
checking on rear brake 101
of the front brake, changing 96

Brake pedal 26
adjusting the basic position 98
checking the free travel 98

C

Chain
checking 84
cleaning 82

Chain guide
checking 84

Chain tension
adjusting 83
checking 83

Checking basic chassis setting with
rider's weight 42

Clothing 11

Clutch
changing fluid 90
checking/correcting fluid level 89

Clutch lever 19
adjusting the basic position 89

Cold start button 24

Combination instrument 22

Compression damping
adjusting the fork 51

Coolant
changing 121
draining 119
refilling 119

Coolant level
checking . . . . . 117...118

Cooling system 117

Customer service 14

D

Defined use 12

Diagnostic connector 116

Difficult operating conditions 29
dry sand 30
high temperatures 31
low temperature 32
muddy surfaces 31
slow speed 31
snow 32
wet sand 30
wet surfaces 31

E

Electric starter 21

Engine
running in 28

Engine number 17

Engine sprocket
checking 84

Environment 12

Exhaust control
end positions, programming 124

F

Figures 14

Fork
adjusting the air pressure 50
checking basic setting 49

Fork legs
bleeding 57
cleaning the dust boots 57
installation 61
removing 60

Fork protector
installation 58
removing 58

Frame
checking 87

Frame protector
installation 60
removing 60

Front fender
installation 68
removing 68

Front wheel
installing 105
removing 104

Frost protection
checking 117

Fuel screen
changing 130

Fuel tank
installation 80
removing 78

Fuel tank cap
closing 24
opening 23

Fuse
changing the main fuse 114
of the fuel pump, changing 115

G

Gear oil
adding 133
changing 132

Gear oil level
checking 131

Gear shift lever 25
adjusting the basic position 129
checking the basic position 128

H

Hand brake lever 19

Hand grip
checking 88

Handbrake lever
adjusting the basic position 92
checking the free travel 92

Handlebar position 53
adjusting 53

High-speed compression damping
adjusting the shock absorber 43

I

idle speed
adjusting 128

Idle speed adjustment screw 25

Implied warranty 14

Improper use 13

Intended use 12

K

Kill button 20

L

Lower triple clamp
installation 63
removing 62

Low-speed compression damping
adjusting the shock absorber 42

M

Main fuse
changing 114

Main silencer
changing damping material 78

Manufacturer's warranty 14

Mapping
changing 126

Motorcycle
cleaning 135
raising with lift stand 56
removing from lift stand 56

Muffler
installation 77
removing 77

N

Number plate
installation 67
removing 67

O

Owner's manual 12

P

Plug-in stand 26

Preparing for use
- after storage 138
- checks and maintenance measures when preparing for use 33
- Notes on preparing for first use 27

Protective clothing 11

R

Rear sprocket
- checking 84

Rear wheel
- installation 106
- removing 105

Rebound damping
- adjusting the fork 52
- adjusting the shock absorber 44

Recycling 157

Refueling
- fuel 37

Resources 14

Rider sag
- adjusting 48

S

Safe use 11

Seat
- mounting 72
- removing 71

Service 14

Shock absorber
- adjusting the spring preload 47
- checking static sag 46
- checking the rider sag 46
- compression damping, general 42
- installation 70
- removing 69

Side stand 26

Skid plate
- installation 59
- removing 59

spare parts 14

Spoke tension
- checking 109

Starting 33

Starting performance of lithium-ion batteries at low temperatures 29

Steering head bearing
- lubricating 67

Steering head bearing play
- adjusting 66
- checking 65

Storage 137

Swingarm
- checking 87

T

Tampering 10

Throttle cable play
- adjusting 127
- checking 126

Throttle cable routing
- checking 87

Throttle twist grip 20

Tire condition
- checking 107

Tire pressure
- checking 108

Transportation 36

V

Vehicle identification number 17

VIN 17

W

Work rules 11

3240380en

21/08/2026

KTM Sportmotorcycle GmbH
5230 Mattighofen/Austria
https://www.ktm.com