OWNER'S MANUAL 2027

READY TO RACE

890 ADVENTURE R RALLY

ITEM NO.: 3240371EN

Dear KTM customer,

Congratulations on your decision to purchase a KTM motorcycle. You are now the owner of a state-of-the-art sports vehicle which, with proper care, will bring you pleasure for a long time to come.

We hope you enjoy your bike and have a safe journey at all times!

You can enter the serial numbers of your vehicle below to find the serial numbers more quickly if required:

Vehicle identification number (p. 19)	Stamp of the contractual partner
Engine number (p. 20)	

The owner's manual contained the latest information for this model series at the time of publication. However, minor differences due to further developments in design cannot be ruled out completely.

All specifications contained herein are non-binding. KTM Sportmotorcycle GmbH specifically reserves the right to modify or delete technical specifications, prices, colors, forms, materials, services, designs, equipment, etc., without prior notice and without specifying reasons, to adapt these to local conditions, as well as to stop production of a particular model without prior notice. KTM accepts no liability for delivery options, differences from illustrations and descriptions, misprints, and other errors. The models portrayed partly contain special equipment that does not belong to the regular scope of supply.

© 2026 KTM Sportmotorcycle GmbH, Mattighofen Austria
All rights reserved. Figures: Mitterbauer / Visus Studios / KISKA / KTM
Written permission from the copyright owner is required before any duplication or reproduction.

ISO 9001

KTM applies quality assurance processes that lead to the highest possible product quality as defined in the ISO 9001 international quality management standard.

12 100 6061

REG.NO. 12 100 6061

Issuing institution:
TÜV SÜD Management Service GmbH

KTM Sportmotorcycle GmbH
Stallhofnerstraße 3
5230 Mattighofen, Austria

This document is valid for:
890 ADVENTURE R RALLY US (F9775627)

3240371en

20/04/2026

Table of contents

1 Means of representation 9
1.1 Conventions 9
1.1.1 Icons 9
1.1.2 Formatting 9
1.1.3 Abbreviations 9
2 Safety 10
2.1 Safety instructions 10
2.2 Consumer rights 10
2.3 Operating noise warning 10
2.4 Manufacturer warranty for the exhaust monitoring system 10
2.5 Noise emission warranty 11
2.6 Reporting safety defects 11
2.7 Ban on tampering 11
2.8 Safe use 12
2.9 Protective clothing 12
2.10 Work rules 12
2.11 Environment 13
2.12 Owner's manual 13
2.13 Use definition – intended use 13
2.14 Improper use 14
2.15 Safety markings on the motorcycle 14
2.15.1 Overview of labels 14
2.15.2 Label in detail 14
3 Important notes 16
3.1 Manufacturer's warranty, implied warranty 16
3.2 Auxiliary material, operating material 16
3.3 Spare parts, accessories 16
3.4 Service 16
3.5 Figures 16
3.6 Customer service 16
4 View of the vehicle 17
4.1 View of vehicle, front left (example) 17
4.2 View of vehicle, rear right (example) 18
5 Serial number 19
5.1 Vehicle identification number 19
5.2 Type approval label 19
5.3 Key number 19
5.4 Engine number 20
5.5 Fork part number 20
5.6 Shock absorber part number 20
5.7 Steering damper article number 20
6 Controls 21
6.1 Clutch lever 21
6.2 Handbrake lever 21
6.3 Throttle grip 21
6.4 Switches on the left side of the handlebar 21
6.4.1 Combination switch 21
6.4.2 Light switch 22
6.4.3 Cruise control system button 22
6.4.4 Menu buttons 23
6.4.5 Turn signal switch 23
6.4.6 Horn button 24
6.5 Switches on the right side of the handlebar 24
6.5.1 Start button/kill switch 24
6.5.2 Hazard warning flasher switch 25
6.6 Ignition and steering lock 25
6.7 Locking the steering 25
6.8 Unlocking the steering 26
6.9 Socket for electrical accessories 26
6.10 Opening the fuel tank cap 26
6.11 Closing the fuel tank cap 27
6.12 Fuel petcocks 28
6.13 Opening the storage compartment on the left 28
6.14 Closing the storage compartment on the left 29
6.15 Opening the storage compartment on the right 29
6.16 Closing the storage compartment on the right 30
6.17 On-board tool kit 31
6.18 Grab handles 31
6.19 Baggage carrier 31
6.20 Seat lock 31
6.21 Passenger footpegs 32
6.22 Gear shift lever 32
6.23 Brake pedal 32
6.24 Side stand 33
7 dashboard 34
7.1 Dashboard 34
7.2 activation and testing 34
7.2.1 Activation 34
7.2.2 Test 35
7.3 demo mode 35
7.3.1 Activation 35
7.4 warnings 36
7.5 ice warning 36
7.6 indicator lamps 37
7.7 Display 39
7.8 Rally Display (optional) 39
7.9 speed 40

7.10 shift light 41
7.11 speed display 42
7.12 cruise control indicator (optional) 42
7.13 time 42
7.14 ambient air temperature indicator 43
7.15 **Ride–Mode** display 43
7.16 **ABS** display 43
7.17 **MTC** display (optional) 43
7.18 coolant temperature indicator 44
7.19 fuel level display 44
7.20 heated grip (optional) 45
7.21 Front rider's seat heating (optional) 45
7.22 Passenger seat heating (optional) 45
7.23 **Favorites** display 45
7.24 **Quick Selector 1** display 46
7.25 **Quick Selector 2** display 46
7.26 **Navigation** display 46
7.27 **Call** display 46
7.28 Menu 47
7.28.1 **Motorcycle** 47
7.28.2 **Ride Mode** 47
7.28.3 **ABS** 48
7.28.4 **MTC** (optional) 49
7.28.5 **MTC+MSR** (optional) 49
7.28.6 **QUICKSHIFTER+** (optional) 50
7.28.7 **Grip Heating** (optional) 50
7.28.8 **Riders Seat** (optional) 50
7.28.9 **Throttle Response** (optional) 51
7.28.10 **Slip Adjuster** (optional) 51
7.28.11 **Bike info** 52
7.28.12 **Bike info** 52
7.28.13 **Warning** 53
7.28.14 **Trip info** 53
7.28.15 **Trip 1** 53
7.28.16 **Trip 2** 54
7.28.17 **Navigation (optional)** 54
7.28.18 Last search (optional) 55
7.28.19 Favorites (optional) 55
7.28.20 Skip Waypoint (optional) 56
7.28.21 Volume (optional) 56
7.28.22 Stop Navigation (optional) 57
7.28.23 **Audio** 57
7.28.24 call 58
7.28.25 Call out 58
7.28.26 **Settings** 59
7.28.27 **favorites** 59
7.28.28 **Favorites–display 1–4** 59
7.28.29 **Quick Selector 1** 60
7.28.30 **Quick selector 2** 60
7.28.31 **KTMconnect** (optional) 60
7.28.32 **Bluetooth** 61
7.28.33 **Pairing** 61
7.28.34 **Riders Headset** (optional) 62
7.28.35 **Headset Type** (optional) 63
7.28.36 **Shift Light** 63
7.28.37 **Shift light state** 63
7.28.38 **RPM1** 64
7.28.39 **RPM2** 64
7.28.40 Setting the time and date 64
7.28.41 **Clock format** 65
7.28.42 **Date format** 66
7.28.43 **Units** 66
7.28.44 **Distance** 66
7.28.45 **Temperature** 66
7.28.46 **Pressure** 67
7.28.47 **Consumption** 67
7.28.48 **Language** 67
7.28.49 **DRL** 67
7.28.50 **Heating** (function optional) 68
7.28.51 **Heated Grips** (function optional) 68
7.28.52 **Seat Heating Rider** (function optional) 69
7.28.53 **Seat Heating Pillion** (function optional) 69
7.28.54 **Extra Functions** 69
7.28.55 **Demo mode** 70

8 Ergonomics 71
8.1 Handlebar position 71
8.2 Adjusting the handlebar position 71
8.3 Adjusting the basic position of the clutch lever 72
8.4 Adjusting the basic position of the hand brake lever 72
8.5 Adjusting foot brake lever stub 73
8.6 Adjusting the basic position of the brake pedal 73
8.7 Checking the basic position of the gear shift lever 74
8.8 Adjusting the basic position of the gear shift lever 74

9 Preparing for use 76
9.1 Notes on preparing for first use 76
9.2 Running in the engine 77
9.3 Loading the vehicle 77
9.4 Preparing the vehicle for difficult operating conditions 78

10 Riding instructions 79
10.1 checks and maintenance measures when preparing for use 79
10.2 Starting the vehicle 79

10.3 Starting off 80
10.4 Quickshifter+ (optional) 81
10.5 Shifting, riding 81
10.6 **MSR** (optional) 84
10.7 Braking 84
10.8 Stop, park 85
10.9 Transportation 86
10.10 Towing in the event of a breakdown 87
10.11 Refueling 87

11 Service schedule 89

11.1 Service work 89

12 Tuning the chassis 91

12.1 Fork/shock absorber 91
12.2 Adjusting the compression damping of the fork 91
12.3 Adjusting the rebound damping of the fork 91
12.4 Adjusting the spring preload of the fork 92
12.5 Bleeding the fork legs 93
12.6 Compression damping of the shock absorber 93
12.7 Adjusting the low-speed compression damping of the shock absorber 93
12.8 Adjusting the high-speed compression damping of the shock absorber 94
12.9 Adjusting the rebound damping of the shock absorber 95
12.10 Adjusting the spring preload of the shock absorber 95

13 Service work on the chassis 97

13.1 Raising the motorcycle with rear lifting gear 97
13.2 Removing the rear of the motorcycle from the lifting gear 97
13.3 Lifting the motorcycle with the front lifting gear 97
13.4 Taking the motorcycle off the front lifting gear 98
13.5 Removing the seat 99
13.6 Mounting the seat 99
13.7 Checking the chain for dirt 99
13.8 Cleaning the chain 99
13.9 Checking the chain tension 100
13.10 Adjusting the chain tension 101
13.11 Checking the chain, rear sprocket, front sprocket, and chain guide 102
13.12 Removing the left side cover 104
13.13 Installing the left side cover 105
13.14 Removing the right side cover 105
13.15 Installing the right side cover 106
13.16 Removing the battery cover 106
13.17 Installing the battery cover 107
13.18 Removing left fuel tank spoiler 107
13.19 Installing the left fuel tank spoiler 109
13.20 Removing the right fuel tank spoiler 110
13.21 Installing the right fuel tank spoiler 111
13.22 Removing the front top fender 112
13.23 Installing the front top fender 112
13.24 Removing the fork protector 113
13.25 Installing the fork protector 113
13.26 Cleaning the dust boots of the fork legs 113
13.27 Removing the windshield 114
13.28 Installing the windshield 114
13.29 Removing the skid plate 115
13.30 Installing the skid plate 116
13.31 Removing the muffler 117
13.32 Installing muffler 117

14 Brake system 119

14.1 Anti-lock braking system 119
14.2 Checking the brake discs 120
14.3 Checking the brake fluid level for the front brake 121
14.4 Adding brake fluid for the front brake 121
14.5 Checking that the brake pads of the front brake are secured 123
14.6 Checking the free travel of the brake pedal 123
14.7 Checking the brake fluid level for the rear brake 124
14.8 Adding brake fluid for the rear brake 124
14.9 Checking that the brake pads of the rear brake are secured 125

15 Wheels, tires 127

15.1 Removing the front wheel 127
15.2 Installing the front wheel 128
15.3 Removing the rear wheel 130
15.4 Installing the rear wheel 131
15.5 Checking the rear hub damping rubber pieces 132
15.6 Checking the tire condition 133
15.7 Checking the tire pressure 134

15.8 Checking the spoke tension 135
15.9 Tubeless tire system 136
15.10 Using tire repair spray 136

16 Electrics 137

16.1 daytime running light 137
16.2 Removing the 12 V battery 137
16.3 Installing the 12 V battery 139
16.4 Charging the 12 V battery 140
16.5 Changing the main fuse 142
16.6 Changing the ABS fuses 143
16.7 Changing the fuses of individual electrical power consumers 144
16.8 Checking the headlight setting 146
16.9 Adjusting the headlight range 146
16.10 Diagnostic connector 147
16.11 Front ACC1 and ACC2 147
16.12 Rear ACC1 and ACC2 147

17 Cooling system 148

17.1 Cooling system 148
17.2 Checking the coolant level in the compensating tank 148
17.3 Correcting the coolant level in the compensating tank 149

18 Tuning the engine 151

18.1 **Ride Mode** 151
18.2 Motorcycle traction control 152
18.3 slip adjustment (optional) 152
18.4 **Throttle Response** (optional) 152

19 Service work on the engine 153

19.1 Checking the engine oil level 153
19.2 Changing the engine oil and oil filter, cleaning the oil screens 153
19.3 Adding engine oil 155
19.4 Checking the free travel of the clutch lever 156
19.5 Adjusting the free travel of the clutch lever 156

20 Cleaning, care 157

20.1 Cleaning the motorcycle 157
20.2 Checks and maintenance steps for winter operation 158

21 Storage 160

21.1 Storage 160
21.2 Preparing for use after storage 161

22 Troubleshooting 162

22.1 troubleshooting 162

23 Technical specifications 164

23.1 Engine 164
23.1.1 Technical data - engine 164
23.2 Chassis 165
23.2.1 Technical data - chassis 165
23.2.2 Technical data - tires 166
23.3 Electrics 167
23.3.1 Battery 167
23.3.2 Fuses 167
23.3.3 Lamps 167
23.4 Fork 167
23.4.1 Technical data - fork 167
23.4.2 Fork capacity 168
23.5 Shock absorber 168
23.5.1 Technical data - shock absorber 168
23.6 Tightening torque 169
23.6.1 engine tightening torques 169
23.6.2 Chassis tightening torques 173

24 Declarations of conformity 181

24.1 Declarations of conformity 181

25 Recycling 182

25.1 Recycling 182

Notes 183

A Technical terms 183

B Fuels..... 184

C Operating supplies..... 185

D Cleaning agents..... 187

E Icons..... 188

E.1 Symbol colors 188
E.1.1 Red symbols..... 188
E.1.2 Yellow and orange symbols 188
E.1.3 Green and blue symbols 188

Index 189

1.1 Conventions

1.1.1 Icons

✓	Indicates a desired result (e.g. of a work step or a function).
✗	Indicates an undesired result (e.g. of a work step or a function).
	All work marked with this symbol requires specialist knowledge and technical understanding. Ensure that this work is carried out or supervised by trained personnel from an authorized contractual partner, and that any special tools required are used.
	Indicates a page reference.
	Indicates information with more details.
	Indicates a tip, e.g. to simplify work.
»	Indicates the result from a test step.
◀	Indicates the end of an activity, including any rework.

1.1.2 Formatting

Proprietary name	Indicates a proprietary name.
Name ®	Indicates a protected name.
Brand ™	Indicates a brand available on the open market.
Underlined terms	Refer to technical details of the vehicle or indicate technical terms that are explained in the glossary.

1.1.3 Abbreviations

2–pc.	two-part
Part no.	Part number
or	respectively
approx.	circa
etc.	et cetera
poss.	possibly/possible
if necessary	if necessary
cmpl.	complete
min.	at least
no.	number
no fig.	no figure
s.	see
among others	among others/not limited to
and the like	and the like
etc.	et cetera
cf.	compare
e.g.	for example

2.1 Safety instructions

Function of the safety instruction

Safety instruction brings attention to dangers when handling the product. Hazards are classified, named, described, and supplemented with information on how to avoid them.

- If there is a safety instruction before a list of instructions, the danger exists throughout the entire activity.
- If there is a safety instruction immediately before an instruction, the next step presents a danger.

Safety instruction layout

All safety instructions are identified by a signal word and a warning symbol. The combination of signal word and warning symbol determines the degree of danger.

DANGER
Indicates an imminent danger that leads to serious injury or death.

WARNING
Indicates a potentially imminent danger that could lead to serious injury or death.

CAUTION
Indicates a potentially imminent danger that can lead to minor or slight injuries.

NOTE
Indicates a situation that can lead to damage to the product or the product environment.

NOTE
Indicates a situation that can lead to environmental damage.

2.2 Consumer rights

Warranty claims must be made to an authorized dealer. If you are not satisfied, please contact:
KTM North America, Inc., Customer Support, 1119 Milan Ave., Amherst, OH 44001, USA
Phone: (440) 985–3553
www.ktmusa.com
KTM Canada, Inc., Customer Support, 8701 Rue Samuel–Hatt, Chambly, QC J3L 6V4, Canada
Phone: (450) 441–4451
www.ktmcanada.com
Different rights may apply, according to national or regional legislation.

2.3 Operating noise warning

This product should be checked for necessary repair or replacement parts if the motorcycle noise has increased significantly through use. Otherwise, the owner may become subject to penalties under the applicable ordinances.

2.4 Manufacturer warranty for the exhaust monitoring system

KTM North America, Inc. guarantees that, at the time of sale, the exhaust monitoring system complies with all the standards of the US Environmental Protection Agency (EPA) and the California Air Resources Board (CARB).

This manufacturer warranty applies in respect of the first owner of the motorcycle and all subsequent owners.

Your exhaust monitoring system may include parts, such as the fuel injection system, ignition, catalytic converter, control units, hoses, connectors and other emission related assemblies, fuel tank, crankcase breather, fuel tank lid for vehicles with fuel evaporation monitoring, oil filler cap, pressure control valve, fuel/vapor separator, canister, ignition coils, ignition wire, capacitors and spark plugs, if a fault occurs before the first scheduled replacement; it may also include the hoses, fittings, and pipes that are used directly in these components.

If the warranty conditions are met, KTM will repair your motorcycle for you free of charge, including diagnosis, parts, and labor.

As the owner of the motorcycle, you are responsible for the required maintenance specified in the Owner's Manual.

Please note that KTM is entitled to reject warranty claims if your motorcycle or a part fails due to misuse, negligence, an accident, participation in racing or similar events, improper maintenance or unauthorized modifications.

Scope of the manufacturer's warranty

- Five (5) years or 30,000 kilometers (18,641 miles), whichever occurs first.

If you have any questions regarding the manufacturer warranty for the exhaust monitoring system, please address these to:

KTM North America, Inc. Customer Support, 1119 Milan Ave., Amherst, OH 44001, USA

Phone: (888) 985-6090

U.S. Environmental Protection Agency, 2000 Traverwood Drive, Ann Arbor, MI 48105, USA

California Air Resources Board, 1001 "I" Street, Sacramento, CA 95814, USA

2.5 Noise emission warranty

KTM warrants that this exhaust system, at the time of sale, meets all applicable U.S. EPA Federal noise standards.

This manufacturer's warranty extends to the first person who purchases this exhaust system for purposes other than resale, and to all subsequent buyers.

Warranty claims should be directed to:

KTM North America, Inc., Customer Support, 1119 Milan Ave., Amherst, OH 44001, USA

Phone: (440) 985–3553

www.ktmusa.com

KTM Canada, Inc., Customer Support, 8701 Rue Samuel–Hatt, Chambly, QC J3L 6V4, Canada

Phone: (450) 441–4451

www.ktmcanada.com

2.6 Reporting safety defects

If you believe that your vehicle has a defect which could cause an accident resulting in injury or death, you should immediately inform the National Highway Traffic Safety Administration (NHTSA) in addition to notifying KTM North America, Inc.

If the NHTSA receives multiple similar complaints, it may open an investigation. and if it finds that a safety defect exists in a group of vehicles, it may order a recall and remedy campaign. However, NHTSA cannot become involved in individual problems between you, your contracting partner, or KTM North America, Inc.

You can contact the NHTSA via the toll-free "Auto Safety Hotline" on 1–888–327–4236, visit the www.nhtsa.dot.gov website, or write to: NHTSA Headquarters, 1200 New Jersey Avenue, SE, West Building, Washington, DC 20590, USA. You can also obtain other information about motor vehicle safety from the hotline.

2.7 Ban on tampering

No changes may be made to the noise control equipment and components.

Tampering that is prohibited

- Removing or disabling any devices or components used for noise control before the new vehicle is sold or delivered to the end customer.
- Removing or disabling any device or component used for noise control for purposes other than service, repair, or replacement during the service life of the vehicle.
- Use of the vehicle after a device or component used for noise control has been removed, disabled, or inadequately maintained.

Examples of prohibited tampering

- Removing or drilling through rear mufflers, baffle plates, manifolds, or other components that conduct exhaust gases.
- Removing or puncturing parts of the intake system.

- Replacing moving parts of the vehicle, or parts of the exhaust system or intake system, with parts other than those specified by the manufacturer.

2.8 Safe use

DANGER

Danger of accidents A rider who is not fit to ride poses a danger to themself and to others.

– Do not operate the vehicle if you are not fit to ride due to alcohol, drugs, or medication.
– Do not operate the vehicle if you are physically or mentally incapable of doing so.

DANGER

Danger of poisoning Exhaust gases are toxic and inhaling them may result in unconsciousness and death.

– Always ensure that there is sufficient ventilation when running the engine.
– Use suitable exhaust extraction when starting or running the engine in an enclosed space.

WARNING

Danger of burns Some vehicle components become hot when the vehicle is operated.

– Do not touch any parts such as the exhaust system, radiator, engine, damper, or brake system before the vehicle parts have cooled down.
– Allow the vehicle parts to cool down before performing any work on the vehicle.

The vehicle should only be used when it is in perfect technical condition, for its intended purpose, and in a safe and environmentally-friendly manner.

The vehicle may only be used by authorized persons. An appropriate driver's license is needed to drive the vehicle on public roads.

Have any faults that impair safety immediately remedied by an authorized contractual partner.

Adhere to the information and warning labels on the vehicle.

2.9 Protective clothing

WARNING

Risk of injury Missing or inadequate protective clothing increases the risk of injury.

– Wear appropriate protective clothing such as helmet, boots, gloves as well as pants and a jacket with protectors on all rides.
– Always wear protective clothing that is in good condition and meets the legal regulations.

2.10 Work rules

Unless specified otherwise, the ignition must be switched off during all work (models with ignition lock, models with transponder key) or the engine must be at a standstill (models without ignition lock or transponder key).

Special tools are required for some work. The tools are not part of the vehicle, but can be ordered using the number in parentheses. Example: bearing puller (15112017000)

Unless otherwise noted, normal conditions apply to all tasks and descriptions.

Ambient temperature	20 °C (68.0 °F)
Ambient air pressure	1,013 mbar (14.69 psi)
Relative air humidity	60 ±5 %

During assembly, use new parts to replace parts which cannot be reused (e.g. self-locking screws and nuts, expansion screws, seals, sealing rings, O-rings, pins, and lock washers).

A thread lock (e.g. **Loctite®**) is required for some screw connections. Observe the manufacturer's specific instructions for use.

If thread lock (e.g. **Precote®**) has already been applied to a new part, do not apply any additional thread lock.

After disassembly, clean the parts that are to be reused and check them for damage and wear. Replace damaged or worn parts.

After completing a repair or service, check the operating safety of the vehicle.

2.11 Environment

Handling the vehicle responsibly reduces the risk of conflict with other road users and the surrounding area. The future of motorcycling also depends on using motorcycles legally, being environmentally conscious and respecting the rights of others.

When disposing of used oil, other operating and auxiliary fluids, and used components, the laws and regulations of the respective country must be observed.

As motorcycles are not subject to the EU regulations governing the disposal of end-of-life vehicles, there are no legal regulations that pertain to the disposal of an end-of-life motorcycle. More information is available from the authorized contractual partner.

2.12 Owner's manual

Read this owner's manual carefully and in full before riding off for the first time. The owner's manual contains information and tips on how to operate, handle, and service your vehicle, as well as advice on optimum tuning and how to avoid injuries.

Tip

Save this owner's manual on your smartphone, for example, so that you can access it at any time.

An authorized contractual partner will be happy to assist you if you are unsure.

The owner's manual is an important component of the vehicle. If the vehicle is sold, the owner's manual must be downloaded again by the new owner.

The owner's manual can be downloaded multiple times using the QR code or the link on the delivery certificate.

The owner's manual is also available for download from your authorized contractual partner and on the KTM website.

International KTM Website: https://www.ktm.com

A printed copy can be ordered from the following address.

Website for printed copy: https://print.ktm.com

2.13 Use definition – intended use

The vehicle is designed and constructed to withstand the usual demands of regular traffic and use on gentle terrain (unpaved roads). This vehicle is not suitable for use on race tracks.

Note

This vehicle is only authorized for operation on public roads in its homologated version.

2.14 Improper use

The vehicle may only be used as intended.

Improper use can result in danger to people, property and the environment.

Any use of the vehicle beyond the intended and defined use constitutes misuse.

Improper use includes the use of operating and auxiliary materials that do not meet the required specifications for the respective use.

2.15 Safety markings on the motorcycle

2.15.1 Overview of labels

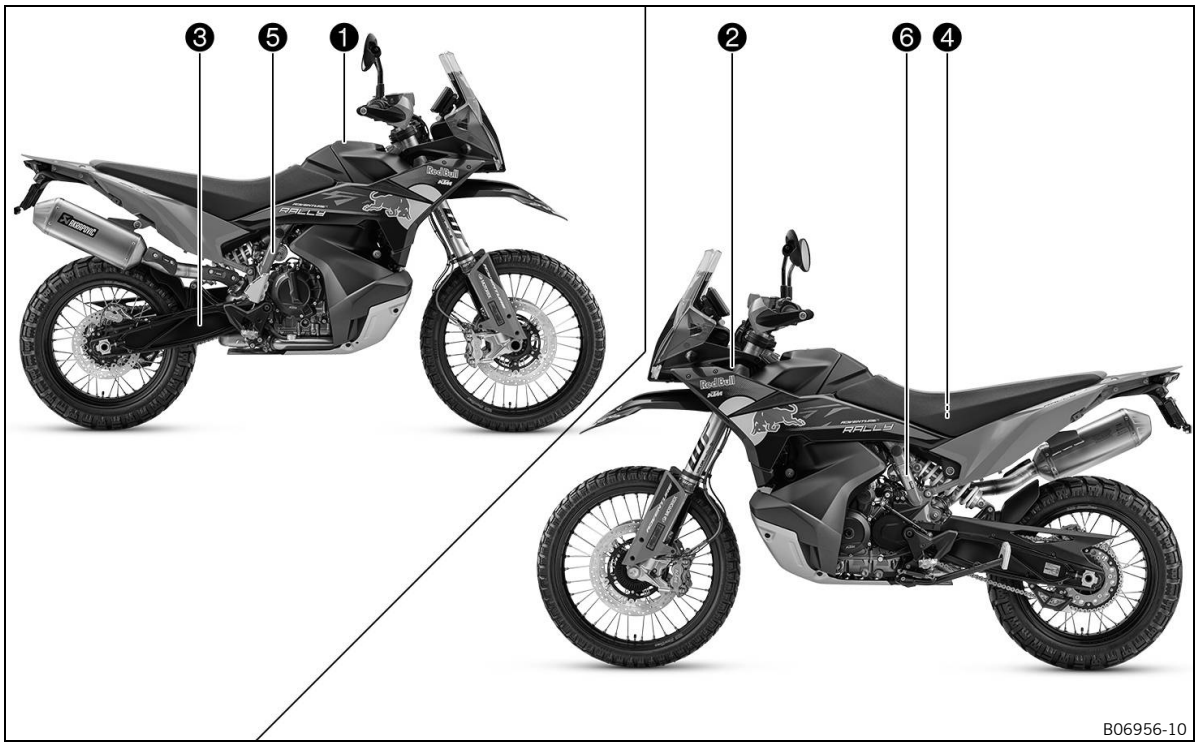

1. Information on preparations for use
2. Information on emissions control
3. Information on noise emissions
4. Information on suspension setting
5. Type approval label for CAN
6. Type label for USA

2.15.2 Label in detail

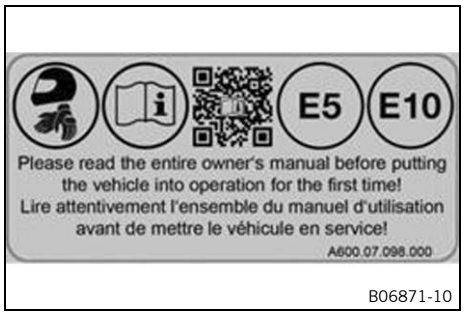

Information on preparations for use

VEHICLE EMISSION CONTROL INFORMATION

MANUFACTURER: KTM AG, Mattighofen, Austria
IMPORTER: KTM NORTH AMERICA, INC.

ENGINE DISPLACEMENT	889 cc	ENGINE EXHAUST EMISSION CONTROL SYSTEM:	TWC, TBI, 2HO2S, HO2S
ENGINE FAMILY	TKTXC0.89R5P		
EVAPORATIVE FAMILY	TKTXU0024R5P		
PERMEATION FAMILY	TKTXPP102RT7	MODEL NAME	890 Adventure R

THIS VEHICLE CONFORMS WITH US EPA AND CALIFORNIA REGULATIONS APPLICABLE TO 2026 MODEL YEAR NEW MOTORCYCLES AND IS CERTIFIED TO 0.8 G/KM HC+NOX, 12 G/KM CO EXHAUST EMISSON STANDARDS IN CALIFORNIA.

ENGINE TUNEUP SPECIFICATIONS:

IGNITION TIMING:	NON ADJUSTABLE
IDLE SPEED:	1500 RPM IN NEUTRAL
IDLE MIXTURE:	NON ADJUSTABLE
VALVE CLEARANCE:	0.10 - 0.15 mm INTAKE 0.15 - 0.20 mm EXHAUST
SPARK PLUG:	NGK LMAR9AI-10
SPARK PLUG GAP:	1.0 mm
FUEL:	UNLEADED GASOLINE ONLY - 91 (R+M)/2 OCTANE OR HIGHER
OIL:	SAE 10 W 50

B06868-10

Information on emissions control

MOTORCYCLE NOISE EMISSION CONTROL INFORMATION
KTM AG, AUSTRIA

THIS 2026 KTM6360889 MOTORCYCLE, 635.05.182.000 MEETS EPA NOISE EMISSION REQUIREMENTS OF 80 dBA AT 4400 RPM BY THE FEDERAL TEST PROCEDURE. MODIFICATIONS WHICH CAUSE THIS MOTORCYCLE TO EXCEED FEDERAL NOISE STANDARDS ARE PROHIBITED BY U.S. FEDERAL LAW. SEE OWNER´S MANUAL.

Motorcycle Type : 890 Adventure R

B06869-10

Information on noise emissions

890 Adventure R A610.06.098.100 SETTING look owner's manual	FORK			SHOCK				
	Compression	Rebound	Preload Adj.	Compr. low speed	Compr. high speed	Rebound	Spring preload (mm)	Preload Adj. (turns)
Comfort	20	18	0	20	2	23	15	4
Standard	15	15	0	15	1,5	15	15	4
Sport	10	10	0	10	1	12	15	4
Max. payload	15	15	3	7	0,5			

B06870-10

Information on suspension setting

MANUFACTURED BY/FABRIQUÉ PAR: KTM AG
GVPR/PNBV: 450 KG DATE: 11/24
V.I.N./N.I.V.: DUMMY*
TYPE: MC

	GAWR/PNBE		TIRE/PNEU-DIMENSION-RIM/JANTE		COLD INFL. PRESS PRESS. DE GONFL. À FROID PSI/LPC	KPA
1st	175	KG	90/90-21	2.50x21	35	240
2nd	275	KG	150/70 B18	4.50x18	35	240

THIS VEHICLE CONFORMS TO ALL APPLICABLE STANDARDS PRESCRIBED UNDER THE CANADIAN MOTOR VEHICLE SAFETY REGULATIONS IN EFFECT ON THE DATE OF MANUFACTURE - CE VEHICULE EST CONFORME À TOUTES LES NORMES QUI LUI SONT APPLICABLES ES VERTU DU RÈGLEMENT SUR DES VEHICLES AUTOMOBILES DU CANADA EN VIGUEUR À LA DATE DE SA FABRI

B06872-10

SAMPLE

Type approval label for CAN

MFD. BY KTM AG AUSTRIA
MOTORCYCLE DATE 11/24

GVWR	992 lbs	450 kg			
GAWR FRONT	386 lbs	175 kg WITH	90/90-21 TIRE,	54T TYPE,	
2.50x21 RIM,	AT	35 psi	2.4 bar COLD		
GAWR REAR	606 lbs	275 kg WITH	150/70 B18 TIRE,	70Q TYPE,	
4.50x18 RIM,	AT	35 psi	2.4 bar COLD		

THIS VEHICLE CONFORMS TO ALL APPLICABLE U.S. FEDERAL MOTOR VEHICLE SAFETY STANDARDS IN EFFECT ON THE DATE OF MANUFACTURER SHOWN ABOVE.

DUMMY*

B06873-10

SAMPLE

Type label for USA

3 Important notes

3.1 Manufacturer's warranty, implied warranty

The work prescribed in the service schedule must only be carried out in an authorized contractual partner and confirmed in the **KTM Dealer.net**, as otherwise all warranty claims will be void. Damage or secondary damage caused by tampering with and/or conversions on the vehicle are not covered by the manufacturer's warranty.

3.2 Auxiliary material, operating material

Use operating materials and auxiliary materials in accordance with the operating instructions and specifications.

3.3 Spare parts, accessories

For safety reasons, only spare parts and accessories approved by KTM may be used. They may only be installed by an authorized contractual partner. KTM accepts no liability for other products and any resulting damage or loss.

Certain spare parts and accessory products are specified in parentheses in the descriptions. Authorized contractual partners will be happy to help.

The current **KTM PowerParts** are listed for each vehicle on the KTM website.

International KTM Website: https://www.ktm.com

3.4 Service

A prerequisite for perfect operation and prevention of premature wear is that the service, care, and tuning work is properly carried out as described in the owner's manual. An incorrect suspension setting can lead to damage and breakage of chassis components.

Use of the vehicle under difficult conditions, such as dusty environments, heavy rain, high heat or with a heavy load, can lead to increased wear of components such as the air filter, powertrain, brake systems, or suspension components. For this reason, it may be necessary to inspect or replace components before the next scheduled service interval.

The prescribed running-in times and service intervals must be observed, otherwise the long-term durability of the vehicle will be severely impaired.

The relevant mileage or time interval is whichever occurs first.

3.5 Figures

Some of the figures in this document contain optional extras.

For clarity, some components may be shown disassembled or may not be shown at all. Disassembly is not always absolutely necessary in order to carry out the activities described. The textual information takes precedence.

3.6 Customer service

Authorized contractual partners will be happy to answer questions about the vehicle and KTM.

A list of authorized contractual partners can be found on the KTM website.

International KTM Website: https://www.ktm.com

4.1 View of vehicle, front left (example)

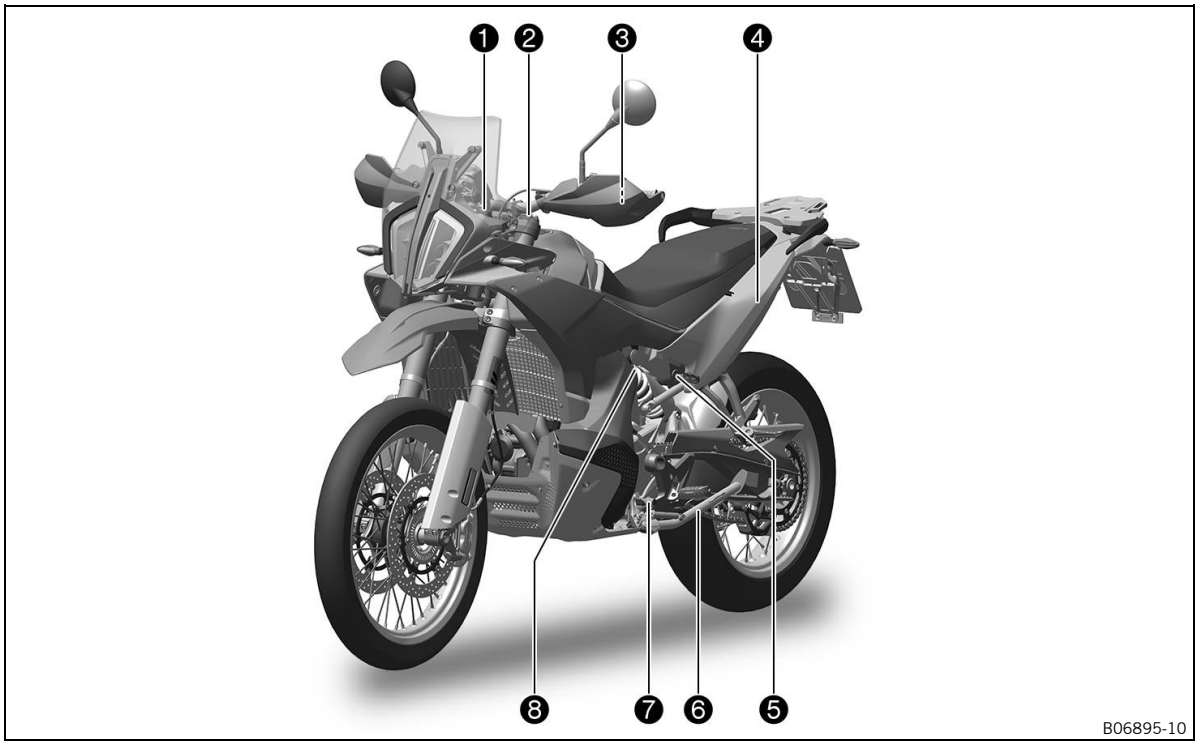

1. Ignition and steering lock (p. 25)
2. Fork compression adjustment
3. Clutch lever (p. 21)
4. Storage compartment, left
5. Seat lock (p. 31)
6. Side stand (p. 33)
7. Gear shift lever (p. 32)
8. Shock absorber, spring preload setting

4.2 View of vehicle, rear right (example)

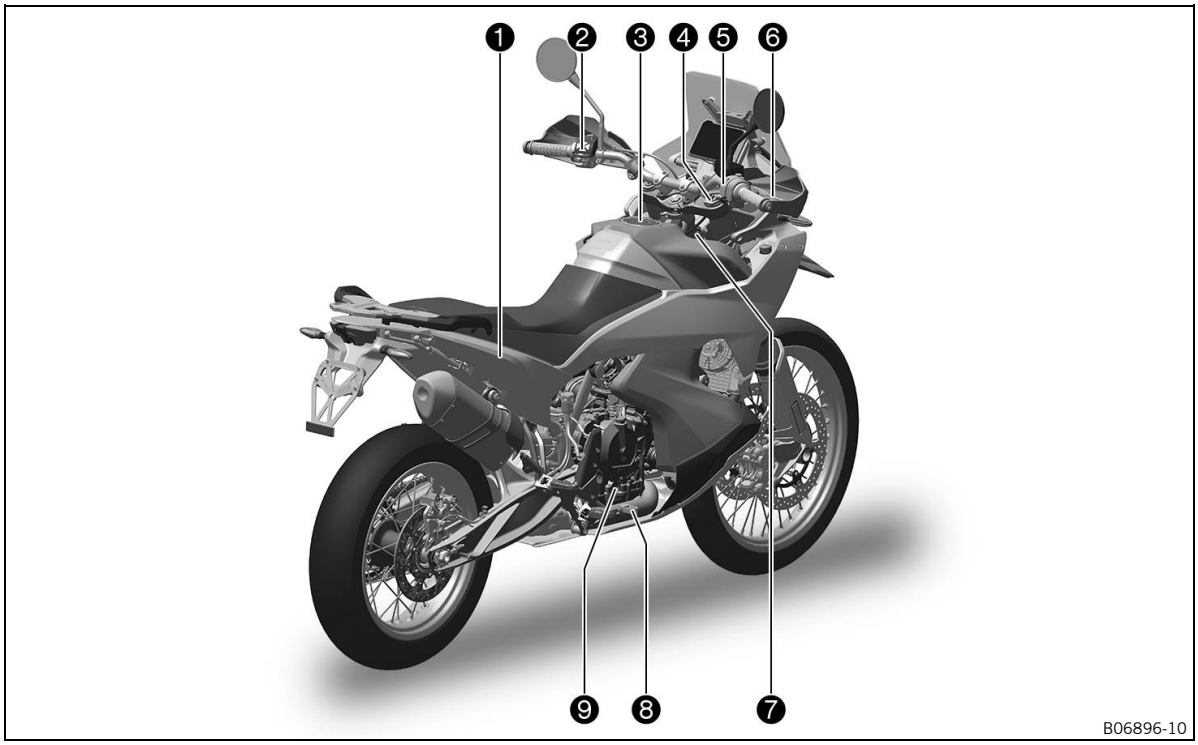

1. Storage compartment, right
2. Light switch (p. 22)
2. Menu buttons (p. 23)
2. Turn signal switch (p. 23)
2. Horn button (p. 24)
2. Cruise control system button (p. 22)
3. Fuel tank cap
4. Fork rebound adjustment
5. Start button/kill switch (p. 24)
5. Hazard warning flasher switch (p. 25)
6. Handbrake lever (p. 21)
7. Vehicle identification number (p. 19)
8. Brake pedal (p. 32)
9. Engine oil level viewer

5.1 Vehicle identification number

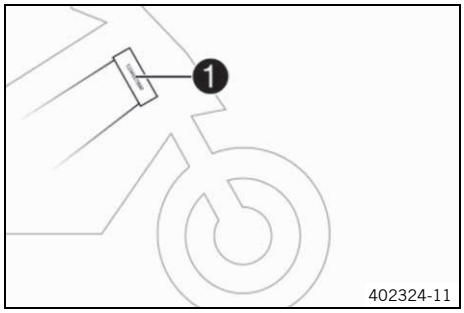

The vehicle identification number ❶ is stamped on the right-hand side of the steering head.

5.2 Type approval label

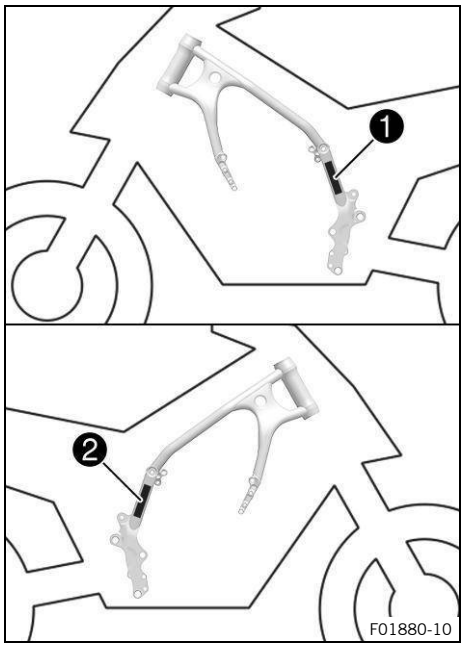

The USA type label ❶ is located on the frame on the left.
The Canada type label ❷ is located on the frame on the right.

5.3 Key number

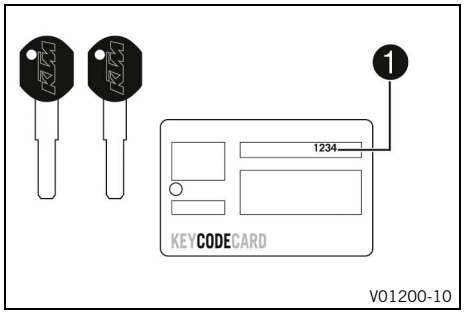

Key number ❶ for the ignition and steering lock is indicated on the key card.

Note
The key number is required to order a spare key and should therefore be kept in a safe place.

5.4 Engine number

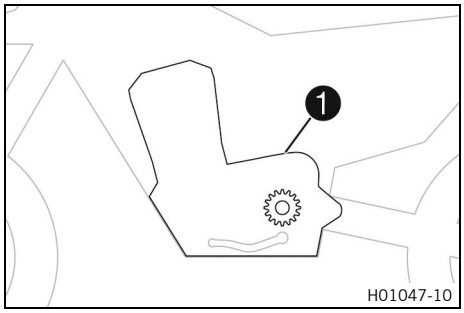

The engine number ❶ is stamped onto the engine case at the top.

5.5 Fork part number

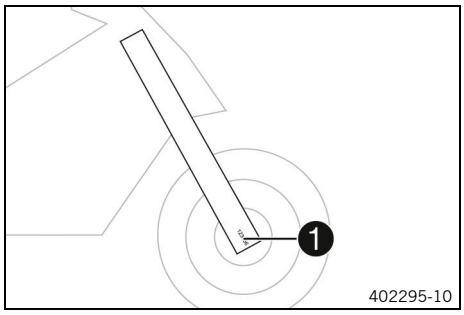

Fork part number ❶ is stamped on the inside of the fork shoe.

5.6 Shock absorber part number

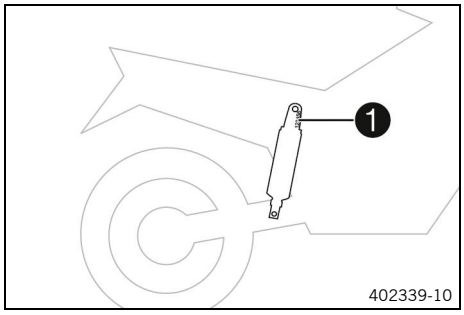

The shock absorber part number ❶ is stamped on the top of the shock absorber.

5.7 Steering damper article number

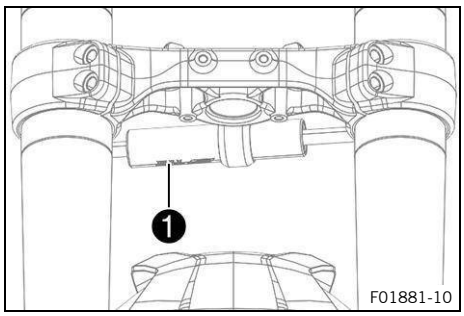

Steering damper article number ❶ is embossed on the underside of the steering damper.

6.1 Clutch lever

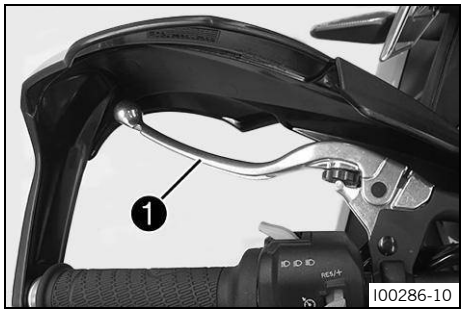

Clutch lever ❶ is fitted on the left side of the handlebar.

6.2 Handbrake lever

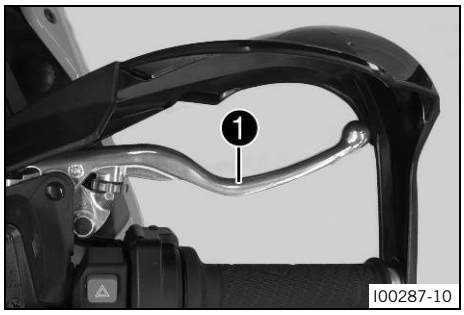

Hand brake lever ❶ is fitted on the right side of the handlebar. The front brake is engaged using the hand brake lever.

6.3 Throttle grip

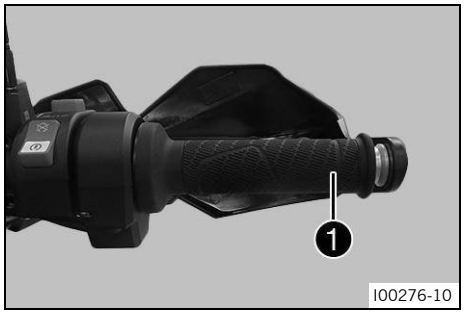

The throttle twist grip ❶ is fitted on the right side of the handlebar.

6.4 Switches on the left side of the handlebar

6.4.1 Combination switch

The combination switch is fitted on the left side of the handlebar.

Overview of the left combination switch

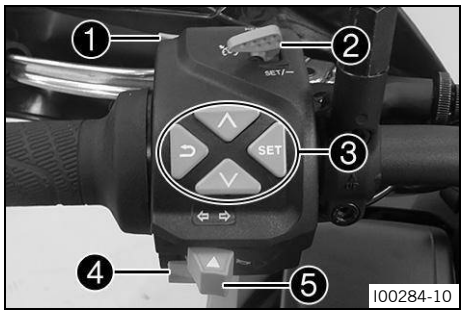

❶ Light switch (p. 22)
❷ Cruise control system button (p. 22)
❸ Menu buttons (p. 23)
❹ Horn button (p. 24)
❺ Turn signal switch (p. 23)

6.4.2 Light switch

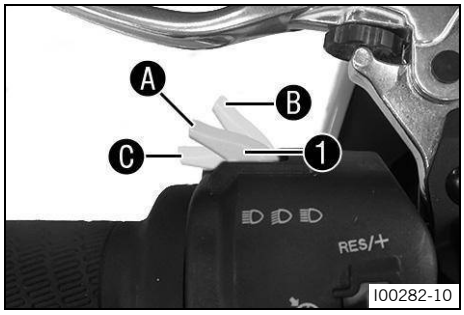

Light switch ❶ is fitted on the left side of the handlebar.

Condition		Meaning
	Light switch in position Ⓐ.	In this position, the low beam and the tail light are switched on.
	Light switch in position Ⓑ.	In this position, the high beam and the tail light are switched on.
	Light switch in position Ⓒ.	The headlight flasher is operated in this position.

6.4.3 Cruise control system button

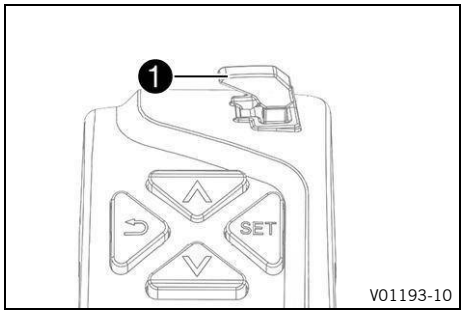

Cruise control switch ❶ is fitted on the left side of the combination switch.

Note
The cruise control system function (optional) must be activated to be able to use the cruise control switch.

Note
After activating the cruise control function, the throttle grip can be turned back to the basic position. The selected speed will be maintained.
If the cruise speed is exceeded for less than 30 seconds by turning the throttle grip, the cruise control remains activated.

To switch off the cruise control function, push the **cruise control switch** to the left.
In addition, the cruise control system function is deactivated when one of the following events occurs:

- Operating the handbrake lever
- Operating the foot brake lever
- Operating the clutch lever
- Turning the throttle grip beyond the basic position
- Control of the motorcycle traction control (**MTC**)
- Slip at the rear wheel or lifting front wheel
- A malfunction occurring, which impairs the cruise control system function
- Exceeding the target speed for more than 30 seconds

WARNING
Danger of accidents The cruise control system function is not suitable for all riding situations.
The selected cruise speed will not be reached if the engine power is not sufficient for a gradient.
The selected target speed will be exceeded if the engine braking effect is not sufficient on an incline.
– Do not use the cruise control systems function on winding roads.
– Do not use the cruise control systems on slippery road surfaces (e.g. rain, ice or snow), where there is poor visibility or on unpaved surfaces (e.g. sand, stones or gravel).
– Do not use the cruise control systems function if the traffic does not permit a constant speed.

The cruise control system function is only available when motorcycle traction control (**MTC**) is activated.

When motorcycle traction control (**MTC**) is switched off, the cruise control system function is also switched off.
The cruise control system function cannot be activated during rapid acceleration.
The cruise control system function cannot be activated in first-gear.

Control range of the cruise control system	30 km/h … 160 km/h (18.6 mph … 99.4 mph)

6.4.4 Menu buttons

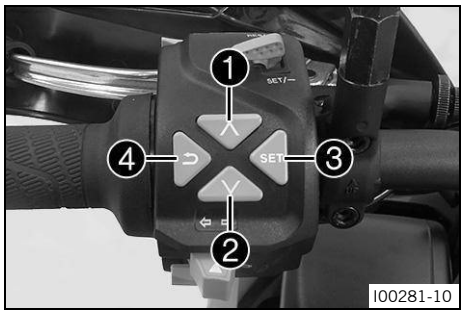

The menu buttons are fitted in the middle of the left combination switch.

The menu buttons are used to control the display on the combination instrument.

Button ❶ is the **UP** button.

Button ❷ is the **DOWN** button.

Button ❸ is the **SET** button.

Button ❹ is the **BACK** button.

6.4.5 Turn signal switch

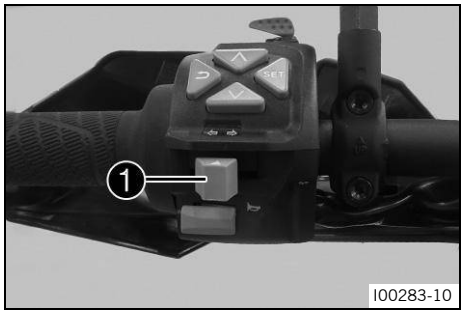

Turn signal switch ❶ is fitted on the combination switch on the left.

Condition		Meaning
⇦	Turn signal switch pressed to the left	Left turn signal on.
⇨	Turn signal switch pressed to the right	Right turn signal on.

To switch off the turn signal, press the turn signal switch towards the switch case.

Note

If the turn signal has been on for at least 10 seconds and the vehicle has traveled 150 meters, the turn signal is automatically switched off by a software function (**ATIR**).

If the vehicle is stationary, both counters are stopped.

If the turn signal switch is reactivated, both counters are reset.

6.4.6 Horn button

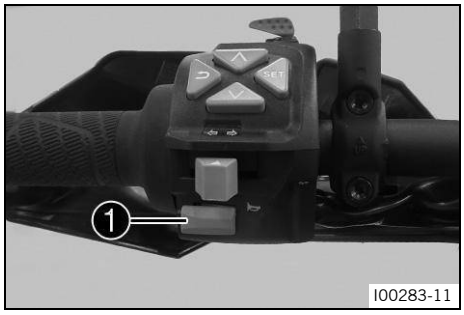

Horn button ❶ is fitted on the left side of the handlebar.

Condition	Meaning
Horn buttons in the basic position	No function
Horn buttons pressed	The horn is operated in this position.

6.5 Switches on the right side of the handlebar

6.5.1 Start button/kill switch

The start button/emergency OFF switch ❶ is fitted on the right side of the combination switch.

Condition		Meaning
	Start button/kill switch off (upper position)	In this position, the ignition circuit is interrupted, a running engine stops, and cannot be started. A message appears on the display.
	Start button/kill switch on (middle position)	This position is required for operation; the ignition circuit is closed.
	Starter motor on (lower position)	In this position, the starter motor is actuated.

6.5.2 Hazard warning flasher switch

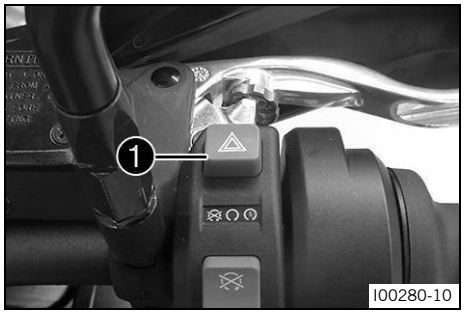

The hazard warning flasher switch ❶ is fitted on the right side of the switch.

The hazard warning flasher is used to indicate emergency situations.

Note

The hazard warning flasher can be activated or deactivated while the ignition is switched on or up to 60 seconds after the ignition is switched off.

Only keep the hazard warning flasher activated as long as necessary as it depletes the 12-V battery.

Condition	Meaning
Hazard warning flasher switch ⚠ in the basic position	No function
Hazard warning flasher switch ⚠ is pressed	All four turn signals and the indicator lamp for the hazard warning flasher in the combination instrument flash.

6.6 Ignition and steering lock

The ignition and steering lock is located in front of the upper triple clamp.

Condition		Meaning
⊗	Ignition off	In this position, the ignition circuit is interrupted, a running engine stops, and an engine at a standstill will not start. The ignition key can be removed.
○	Ignition on	In this position, the ignition circuit is closed, and the engine can be started.
🔒	Steering locked	In this position, the ignition circuit is interrupted and the steering locked. The ignition key can be removed.

6.7 Locking the steering

NOTE

Material damage The vehicle may be damaged if parked incorrectly.

Damage can occur if the vehicle rolls away or falls over.

The components for parking the vehicle are designed only for the weight of the vehicle.

- Park the vehicle on a firm and level surface.
- Make sure that nobody sits on the vehicle when it is parked on a stand.

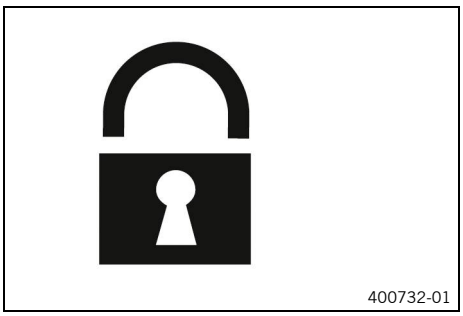

- Park the vehicle.
- Turn the handlebar all the way to the left.
- Insert the ignition key into the ignition and steering lock, press in, and turn to the left. Remove the ignition key.
  ✓ Steering is no longer possible.

6.8 Unlocking the steering

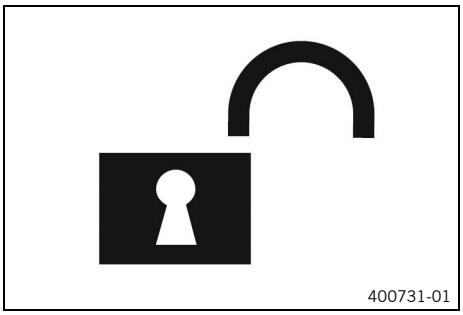

- Insert the ignition key into the ignition and steering lock, press in, and turn to the right. Remove the ignition key.
  ✓ The handlebar can now be moved again.

6.9 Socket for electrical accessories

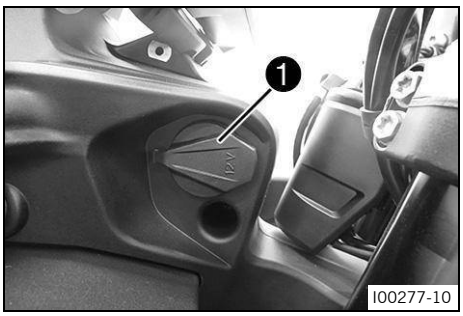

Socket ❶ for electrical accessories is mounted on the left side of the mask support.

The socket is connected to the ignition plus and is fuse-protected.

Socket for electrical accessories	
Voltage	12 V
Maximum current output	10 A

6.10 Opening the fuel tank cap

DANGER

Fire hazard Fuel is highly flammable.

The fuel in the fuel tank expands when warm and can escape if overfilled.

- Do not refuel the vehicle in the vicinity of open flames, glowing, or smoldering objects.
- Make sure that nobody smokes in the vicinity of the vehicle during the refueling process.
- Switch off the engine for refueling.
- Make sure that no fuel is spilled; particularly not on hot parts of the vehicle.
- If any fuel is spilled, wipe it up immediately.
- Do not overfill the fuel tank.

WARNING

Danger of poisoning Fuel is harmful to health.

- Do not allow fuel to come into contact with skin, eyes, or clothing.
- Consult a doctor immediately if fuel has been ingested.
- Do not inhale fuel vapors.
- Rinse the affected area immediately with plenty of water in the event of contact with skin.
- Rinse eyes thoroughly with water and consult a doctor immediately if fuel comes into contact with eyes.
- If fuel spills on to your clothing, change the clothing.
- Store fuel properly in a suitable container and keep out of the reach of children.

NOTE

Environmental hazard Improper handling of fuel is dangerous to the environment.

- Do not allow fuel to enter the groundwater, the soil, or the sewage system.

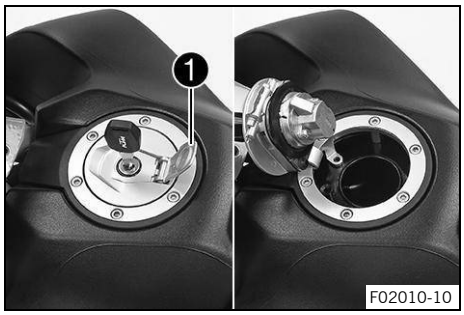

- Lift cover 1 of the fuel tank filler cap and insert the ignition key into the lock.

NOTE

Danger of damage The ignition key may break if overloaded.

- Push down on the fuel tank filler cap to take pressure off the ignition key.

- Turn the ignition key 90° clockwise.
- Lift the fuel tank filler cap.

6.11 Closing the fuel tank cap

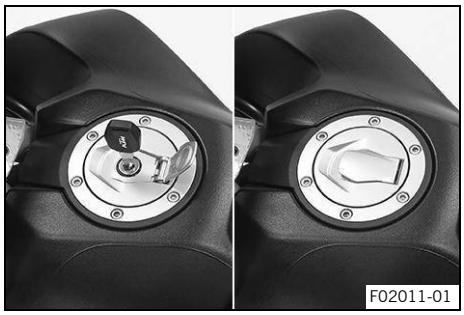

- Fold down the fuel tank filler cap.
- Turn the ignition key 90° clockwise.
- Push down the fuel tank filler cap and turn the ignition key counterclockwise until the lock closes.

WARNING

Fire hazard Fuel is highly flammable and a health hazard.

- Check that the fuel tank filler cap is locked correctly after closing.
- If fuel spills on to your clothing, change the clothing.
- Rinse the affected area immediately with plenty of water in the event of contact with skin.

- Remove the ignition key and close the cover.

6.12 Fuel petcocks

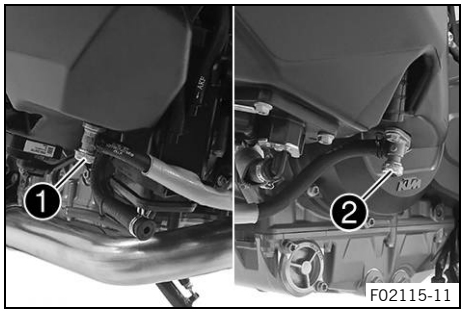

Fuel petcocks ❶ and ❷ are located on the side of the fuel tank.

Note
The fuel cocks are located behind the fuel tank covers.
The fuel cocks must always be open during operation.
The fuel petcocks are only closed to remove the fuel tank.

Condition	Meaning
Fuel petcocks are closed	Level equalization cannot take place and the fuel supply to the throttle valve body is shut off.
Fuel petcocks are open	Level equalization can take place and the fuel supply to the throttle valve body is open.
One fuel petcock open, one fuel petcock closed	Level equalization cannot take place and the fuel supply to the throttle valve body is open.

6.13 Opening the storage compartment on the left

Preparatory work

– Remove the seat. (p. 99)
– Remove the left side cover. (p. 104)

Main work

– Lift the elastic fastener ❶ and detach in area Ⓐ.
– Open storage compartment.

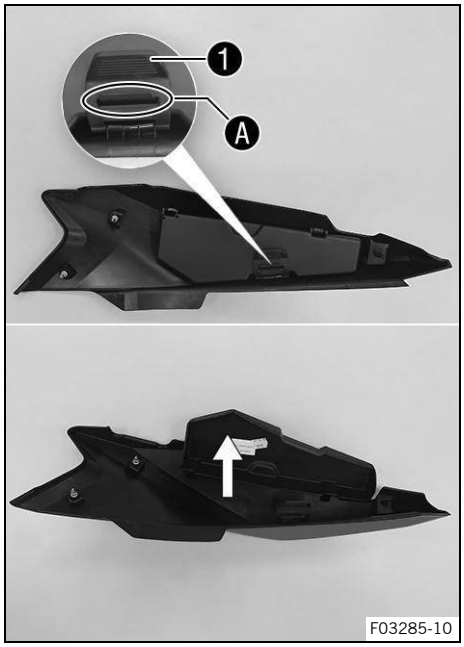

6.14 Closing the storage compartment on the left

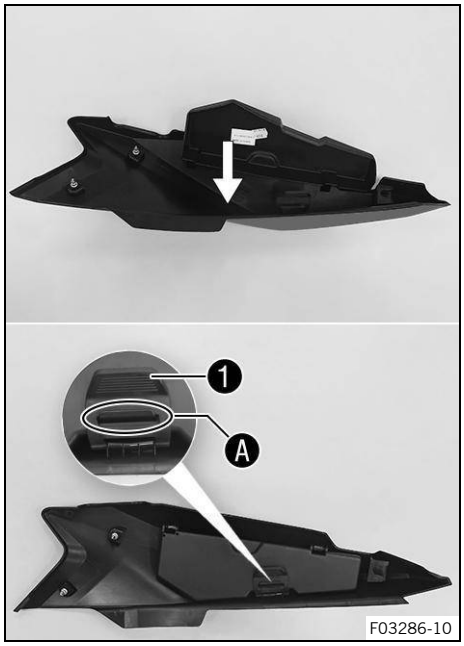

Main work

– Close storage compartment.
– Raise elastic fastener 1 and hang up in area A.

Reworking

– Install the left side cover. (p. 105)
– Mount the seat. (p. 99)

6.15 Opening the storage compartment on the right

Preparatory work

– Remove the seat. (p. 99)
– Remove the right side cover. (p. 105)

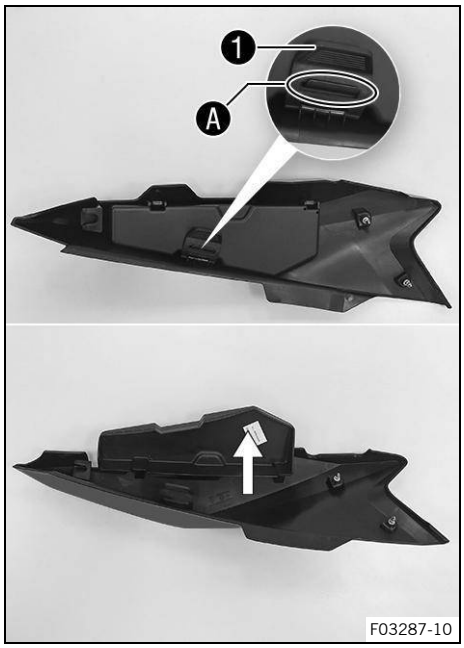

Main work

– Lift the elastic fastener ❶ and detach in area Ⓐ.
– Open storage compartment.

6.16 Closing the storage compartment on the right

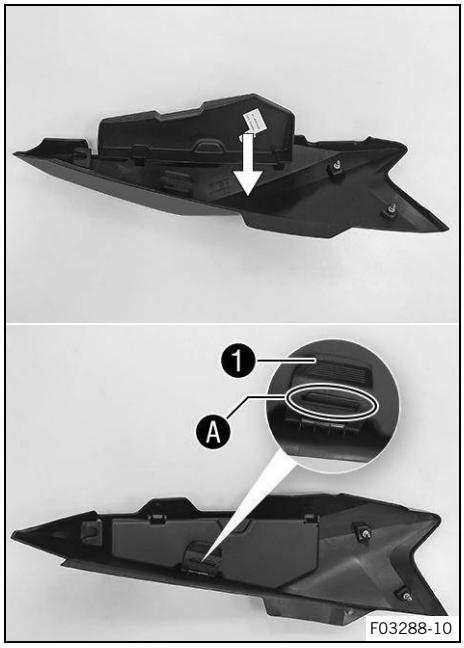

Main work

– Close storage compartment.
– Raise elastic fastener ❶ and hang up in area Ⓐ.

Reworking

– Install the right side cover. (p. 106)
– Mount the seat. (p. 99)

6.17 On-board tool kit

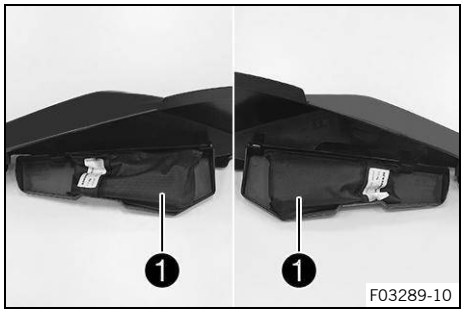

The left or right storage compartment contains the on-board tool set 1.

6.18 Grab handles

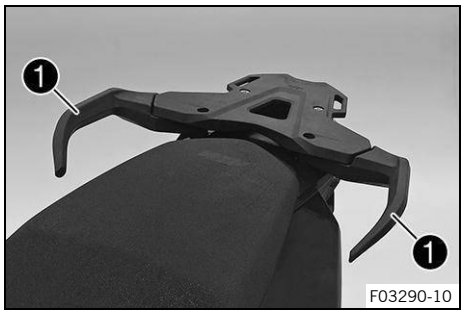

The grab handles 1 are used for moving the motorcycle around.
If you carry a passenger, the passenger can hold onto the grab handles during the trip.

6.19 Baggage carrier

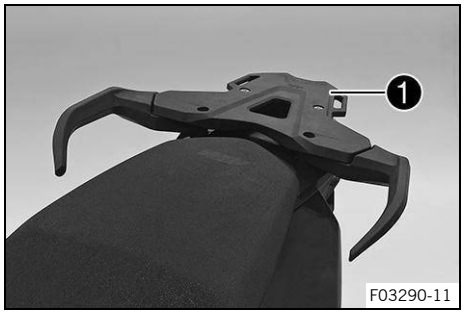

The base plate of a luggage system can be mounted on the luggage rack plate (optional).
The luggage rack plate 1 is located behind the seat.
The luggage rack plate may not be loaded with more than the specified weight.

Maximum permissible load of luggage rack plate	5 kg (11.0 lb)

Note
Follow the instructions provided by the luggage manufacturer.

6.20 Seat lock

Seat lock 1 is located on the left side of the vehicle.
It can be locked with the ignition key.

6.21 Passenger footpegs

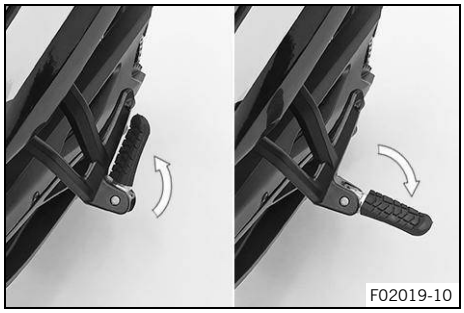

The passenger foot pegs can be folded up and down.

Condition	Meaning
Passenger foot pegs folded up	For operation without a passenger (solo).
Passenger foot pegs folded down	For operation with a passenger.

6.22 Gear shift lever

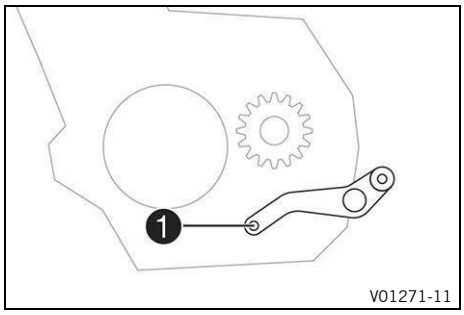

Gear shift lever ❶ is mounted on the left of the engine.

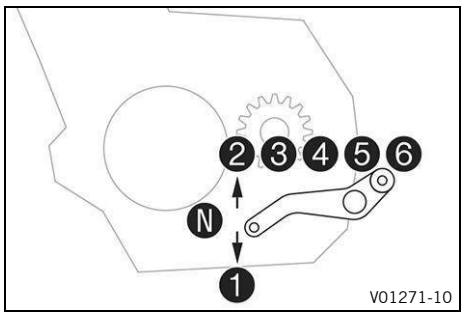

The gear positions can be seen in the figure.
The neutral or idle position is between the first and second gears.

6.23 Brake pedal

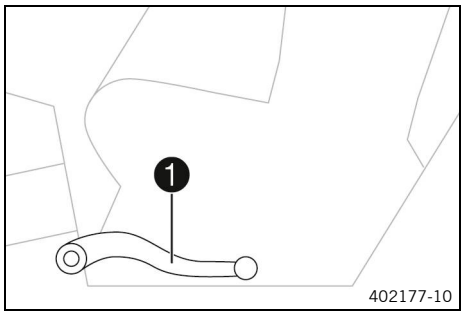

Brake pedal ❶ is located in front of the right footpeg.
The rear brake is operated with the brake pedal.

6.24 Side stand

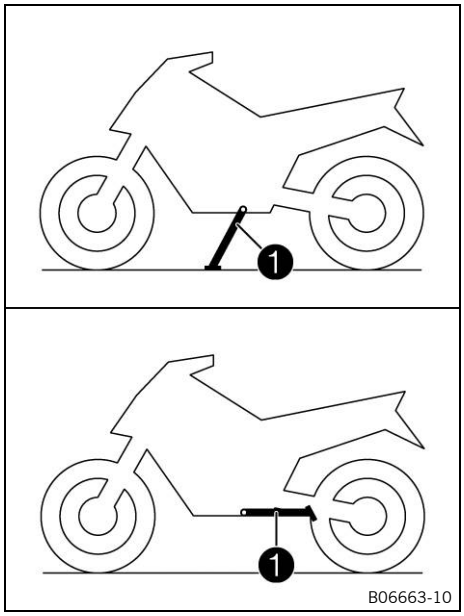

The side stand ❶ is located on the left of the vehicle.
The side stand is used for parking the motorcycle.

Condition	Meaning
Side stand ❶ folded out	The vehicle can be supported on the side stand. The safety starting system is active.
Side stand ❶ folded in	This position is mandatory when riding the motorcycle. The safety starting system is inactive.

Note
The side stand must be folded up during use.
The side stand is coupled with the safety starting system; follow the riding instructions.

7.1 Dashboard

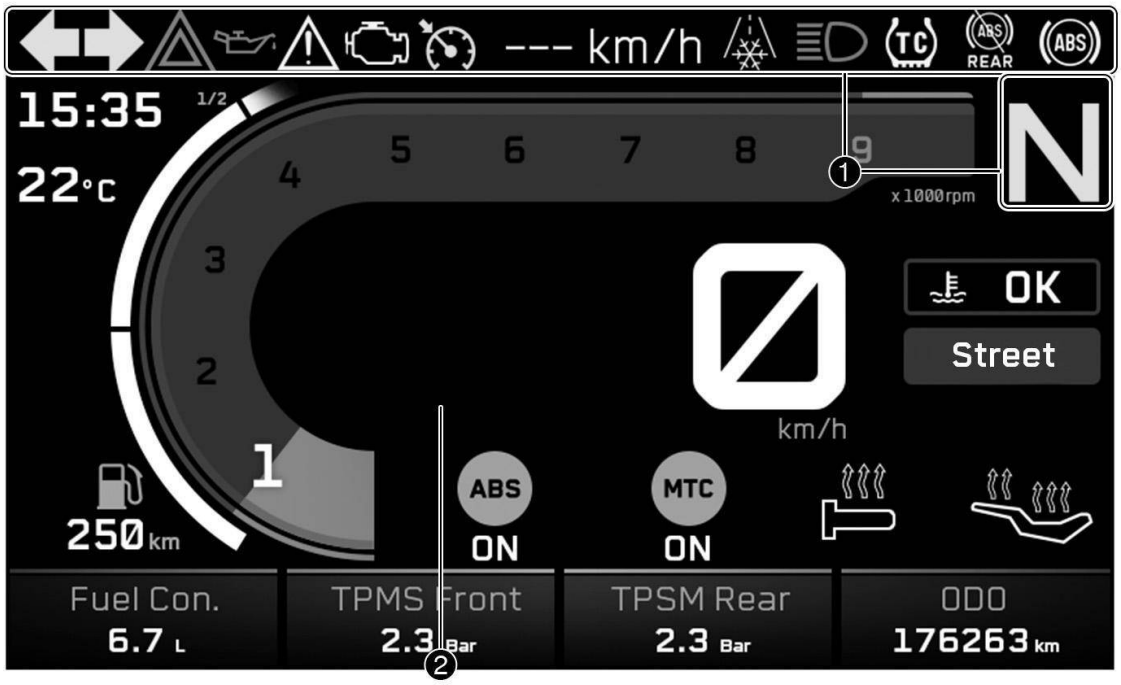

I00194-10

The combination instrument is attached in front of the handlebar.
The combination instrument is divided into two function areas.

❶ indicator lamps (p. 37)
Display ❷

CAUTION
Danger of burns Parts of the combination instrument become hot in certain situations.
The display in particular can heat up considerably at ambient temperatures above 55 °C (131 °F) during long periods of inactivity, e.g. at traffic lights, or in direct sunlight.
- Do not touch the combination instrument with bare hands in the situations referred to.
- Where appropriate protective clothing.
- In the event of burns, rinse the area affected immediately with lukewarm water.

7.2 activation and testing

7.2.1 Activation

I00195-01

The dashboard is switched on with the ignition.

Note
The brightness of the displays is controlled by an ambient light sensor in the combination instrument.

7.2.2 Test

The welcome message appears on the display and all indicator lamps, except for the TC indicator lamp , are briefly illuminated to check that they are working properly.

Note

The malfunction indicator lamp always lights up as long as the engine is not running. If the engine is running and the failure indicator light lights up, stop (taking care not to endanger yourself or other road users in the process) and contact an authorized dealer.

The oil pressure warning lamp always lights up as long as the engine is not running. If the engine is running and the oil pressure warning lamp lights up, stop immediately (taking care not to endanger yourself or other road users in the process) and switch off the engine.

The ABS warning lamp and TC indicator lamp light up until a speed of approx. 6 km/h (approx. 4 mph) or faster has been reached.

7.3 demo mode

7.3.1 Activation

I00279-10

Demo mode is activated in the factory and allows you to test optional software functions.

Once a distance has been covered, demo mode is automatically deactivated as soon as the ignition is turned off.

Distance until demo mode is deactivated	1,500 km (932.1 mi)

The demo functions are shown in area ❶ of the display.

Note

You will regularly be shown messages indicating when demo mode will be ending.

All optional software functions will be deactivated and no longer displayed when demo mode ends. The optional software features are available from authorized dealers.

Functions included in demo mode

- **RALLY PACK** including riding mode **Rally**, MTC+MSR, deactivatable **ABS** on the rear wheel, adjustable characteristics of the throttle response, adjustable motorcycle traction control
- **QUICKSHIFTER+**
- **ETTC**
- Cruise control

7.4 warnings

I00197-10

Warnings appear in the middle of the display; these are marked yellow or red depending on their relevance.

Yellow warnings indicate a malfunction or information which requires prompt intervention or an adjustment to the riding style.

Red warnings indicate a malfunction or information which requires immediate intervention.

Note

Warnings can be hidden by pressing any button.

All the existing warnings are displayed in the **Warning** submenu until they are no longer active.

7.5 ice warning

The **ice warning** goes on when there is an increased risk of ice on the roads.

I00198-01

The **ice warning** appears on the display when the ambient temperature has fallen to or below the specified value.

Temperature	≤ 4 °C (≤ 39.2 °F)

The **ice warning** disappears from the display when the ambient temperature has risen to or above the specified value again.

Temperature	≥ 6 °C (≥ 42.8 °F)

Note

When the **ice warning** lights up, a text warning also appears.

7.6 indicator lamps

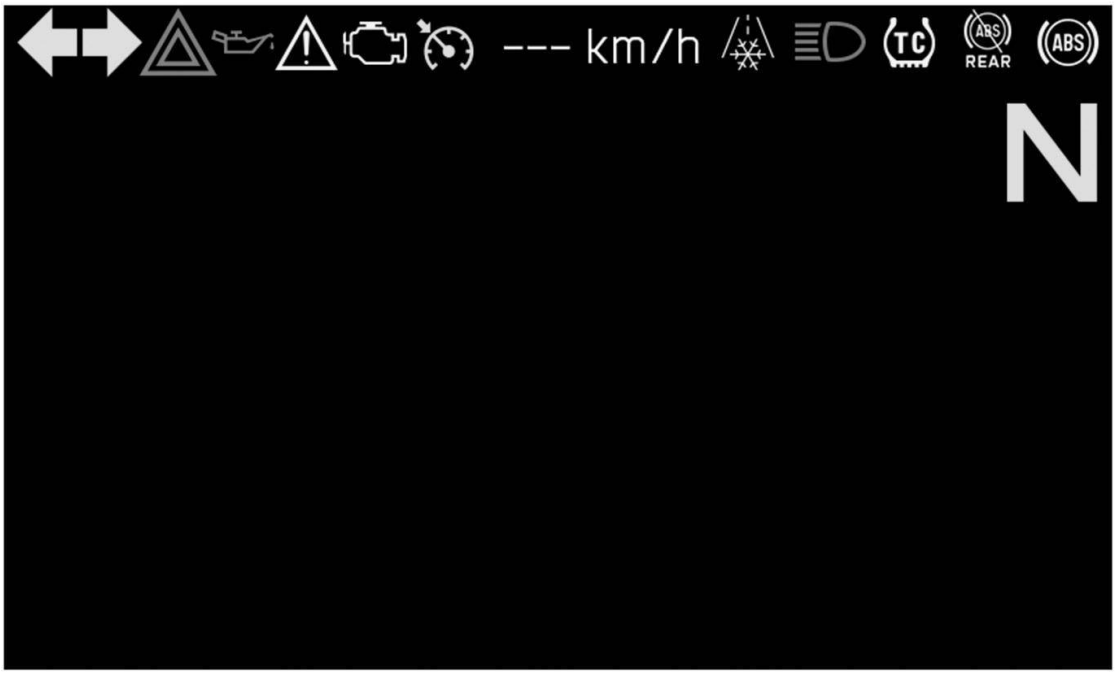

I00199-01

The indicator lamps offer additional information about the operating state of the motorcycle.
When the ignition is switched on, all indicator lamps light up briefly, except for the TC indicator lamp .

Note

The malfunction indicator lamp always lights up as long as the engine is not running. If the engine is running and the failure indicator light lights up, stop (taking care not to endanger yourself or other road users in the process) and contact an authorized dealer.

The oil pressure warning lamp always lights up as long as the engine is not running. If the engine is running and the oil pressure warning lamp lights up, stop immediately (taking care not to endanger yourself or other road users in the process) and switch off the engine.

The ABS warning lamp and TC indicator lamp light up until a speed of approx. 6 km/h (approx. 4 mph) or faster has been reached.

Condition		Meaning
	The turn signal indicator light flashes green with a steady blinking interval	The turn signal is switched on.
	The malfunction indicator light lights up yellow	The **OBD** has detected a malfunction in the vehicle electronics. Come safely to a halt, and contact an authorized dealer.
	ABS warning light lights up yellow	Status or error messages relating to **ABS**.
	The ABS rear warning light lights up yellow	**ABS** is deactivated on the rear wheel.

Condition		Meaning
	The idle indicator lamp lights up green	The transmission is in the neutral position.
	TC indicator lamp lights up/flashes yellow	**MTC** is not enabled or is currently intervening. The TC indicator lamp also lights up if a malfunction is detected. Contact an authorized contractual partner. The TC indicator lamp flashes, if **MTC** or **MSR** (optional) actively engage.
	The oil pressure warning light lights up red	The oil pressure is too low. Stop immediately, taking care not to endanger yourself or other road users in the process, and switch off the engine.
	The alarm system indicator lamp lights up or flashes red	Status or error message of the alarm system.
	The cruise control system indicator lamp (optional) lights up yellow	The cruise control system function is switched on, but cruise control is not activated.
	The cruise control system indicator lamp (optional) lights up green	The cruise control system function is switched on and cruise control is activated.
	The high beam indicator lamp lights up blue	The high beam is switched on.
	General warning light lights up yellow	A note/warning note on operating safety has been detected. This is also shown in the display.
	Hazard blinker indicator lamp flashes yellow	The hazard warning flasher is switched on.
	Ice warning is active on the display.	The warning lamp lights up when there is increased risk of icy roads.

7.7 Display

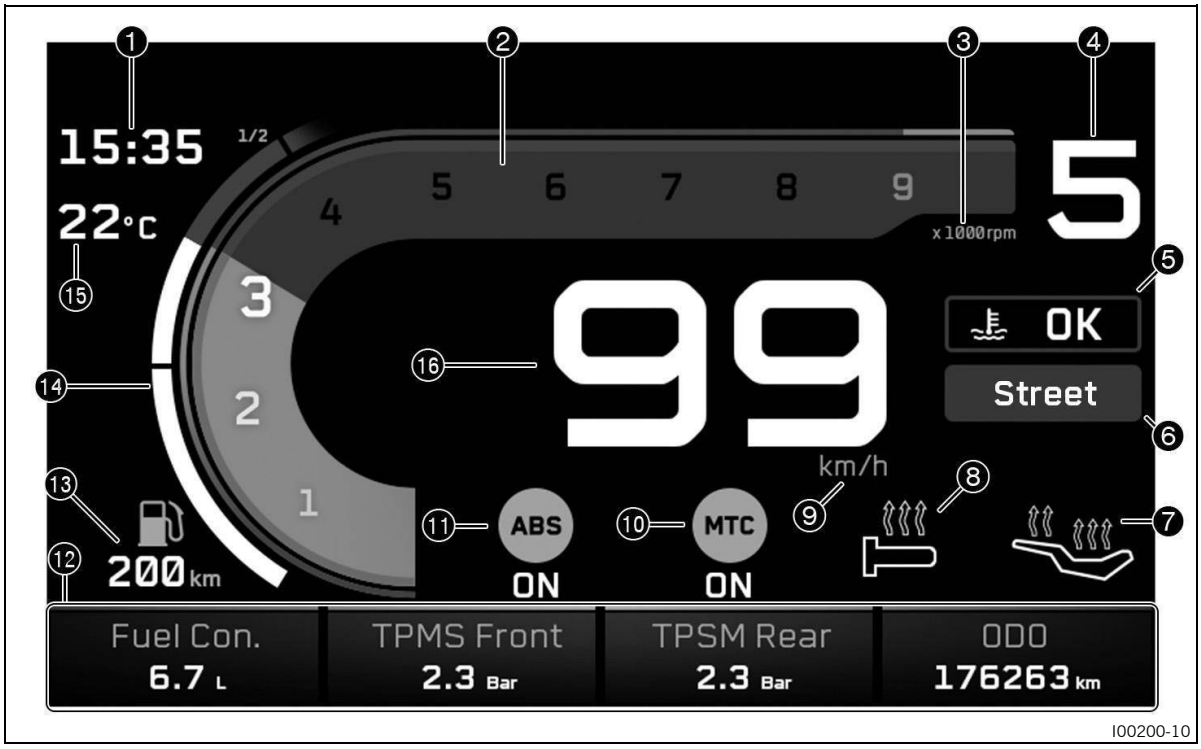

1. time (p. 42)
2. speed (p. 40)
2. shift light (p. 41)
   The shift light is integrated in the rpm gauge display.
3. Unit for the engine speed display
4. Gear display
5. coolant temperature indicator (p. 44)
6. **Ride–Mode** display (p. 43)
7. Front rider's seat heating (optional) (p. 45)
8. heated grip (optional) (p. 45)
9. Unit of speed
10. **MTC** display (optional) (p. 43)
11. **ABS** display (p. 43)
12. **Favorites** display (p. 45)
13. Fuel range display
14. fuel level display (p. 44)
15. ambient air temperature indicator (p. 43)
16. speed display (p. 42)

7.8 Rally Display (optional)

Note
The figure shows the start screen of the combination instrument in active riding mode **Rally** (optional). If the menu is open, the speed and the selected gear are still displayed.

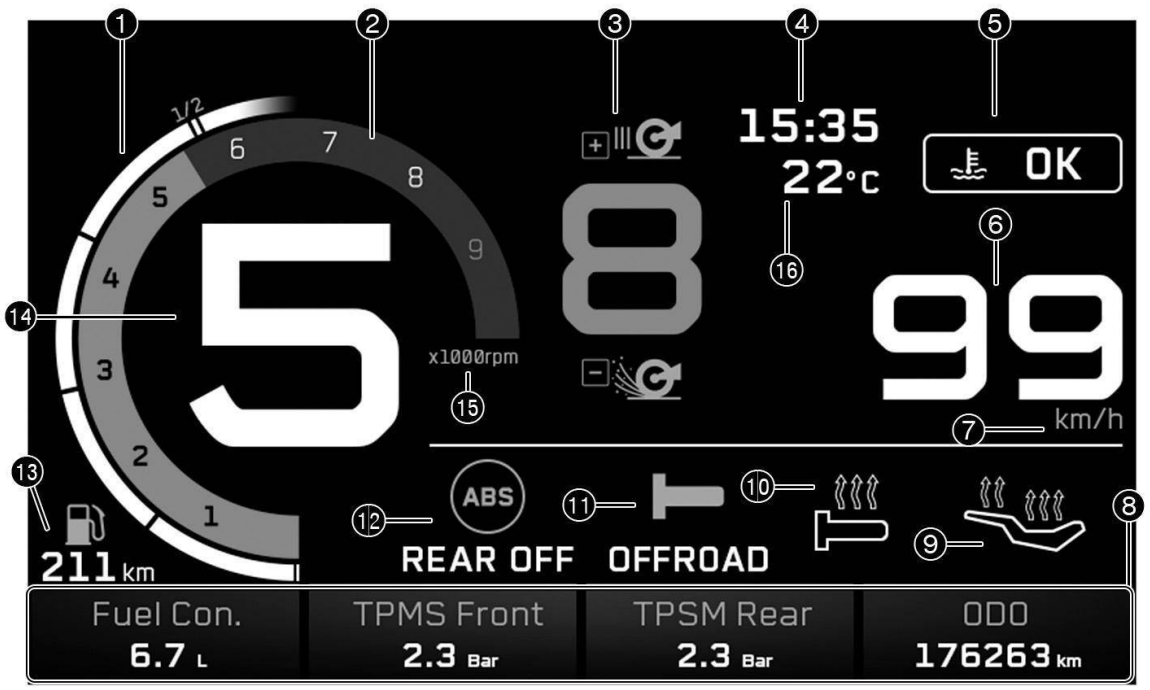

I00201-10

1. fuel level display (p. 44)
2. speed (p. 40)
2. shift light (p. 41)
   The shift light is integrated in the rpm gauge display.
3. slip adjustment (optional) (p. 152)
4. time (p. 42)
5. coolant temperature indicator (p. 44)
6. speed display (p. 42)
7. Unit of speed
8. **Favorites** display (p. 45)
9. Front rider's seat heating (optional) (p. 45)
10. heated grip (optional) (p. 45)
11. **Throttle Response** (optional) (p. 152)
12. **ABS** display (p. 43)
13. Fuel range display
14. Gear display
15. Unit for the engine speed display
16. ambient air temperature indicator (p. 43)

7.9 speed

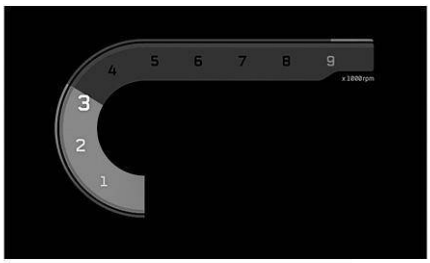

I00202-01

The engine speed is displayed in revolutions per minute.

7.10 shift light

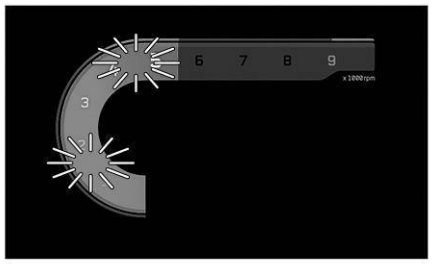

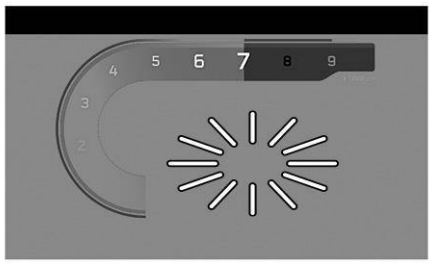

I00203-10

The shift light is integrated in the rpm gauge display.

In the **Shift Light** submenu, the engine speed for the shift warning light can be set. The shift warning light is always active during the running-in phase (up to 1,000 km / 621 mi). The shift warning light can only be deactivated, and the values for **RPM1** and **RPM2** can only be adjusted after this. At **RPM1**, the engine speed display flashes red and at **RPM2**, the entire display flashes red.

Note
After the first service, the shift warning light is deactivated when the engine is warm and in sixth-gear.

Coolant temperature	≤ 35 °C (≤ 95.0 °F)
ODO	< 1,000 km (< 621.4 mi)
The shift warning light always flashes at	6,500 rpm (108.33 Hz)

Coolant temperature	> 35 °C (> 95.0 °F)
ODO	> 1,000 km (> 621.4 mi)
RPM1 shift warning light	flashes
RPM2 shift warning light	flashes and changes color

7.11 speed display

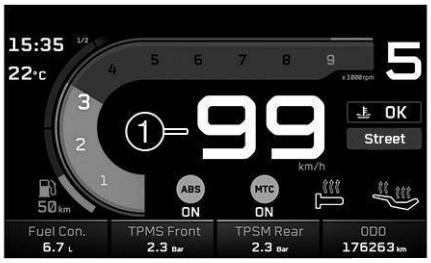

I00204-10

The speed is shown in area ❶ of the display.
Speed is shown in kilometers per hour **km/h** or in miles per hour **mph**.
The unit of speed can be configured in the **Distance** submenu.

7.12 cruise control indicator (optional)

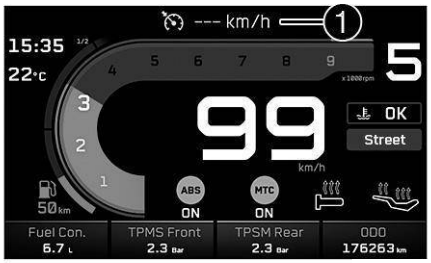

I00205-10

The operating state of the active cruise control is shown in the area ❶ of the display.
Cruise control is operated using the cruise control switch (p. 22).

Note
If the cruise control system function is switched on but cruise control is not activated, the cruise control system indicator lamp lights up yellow.
If the cruise control system function is switched on and cruise control is activated, the cruise control system indicator lamp lights up green.

7.13 time

I00204-11

The time is shown in area ❶ of the display.
The time can be displayed in 24-hour format or 12-hour format in all languages.
The format of the time can be configured in the **Clock Format** menu.

Note
The time must be reset if the 12 V battery was disconnected from the vehicle or the fuse was removed.

7.14 ambient air temperature indicator

I00204-12

The ambient temperature is shown in area ❶ of the display.
The ambient air temperature is displayed in **°C** or **°F**.
The unit of the ambient air temperature can be configured in the **Temperature** submenu.

7.15 Ride–Mode display

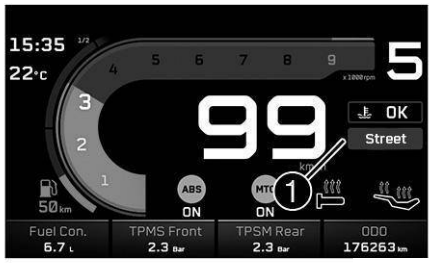

I00204-13

The **Ride Mode** (p. 151) setting is shown in area ❶ of the display.
The drive mode can be configured in the **Ride Mode** submenu.

7.16 ABS display

I00204-14

The ABS mode setting is shown in the ❶ area of the display.
When the **Ride Mode Rally** (p. 151) is activated, the ABS can be configured in the **ABS** submenu.

7.17 MTC display (optional)

I00204-15

The ❶ area of the display indicates whether **MTC** (p. 152) is switched on or off.
The motorcycle traction control can be switched on or off in the **MTC** submenu.

7.18 coolant temperature indicator

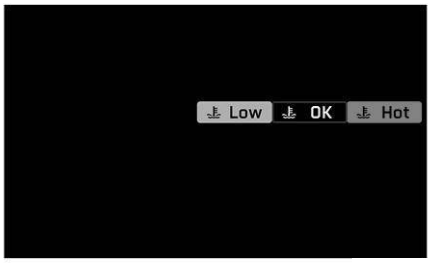

I00206-01

The coolant temperature is displayed by a symbol. The symbol changes between **LOW**, **OK** and **HOT** depending on the temperature.

NOTE

Engine failure Overheating damages the engine.

- If the coolant temperature warning is displayed, stop immediately and take care not to endanger yourself or other traffic participants in the process.
- Allow the engine and cooling system to cool down.
- Check and, if necessary, correct the coolant level on the cooling system while it is in a cooled state.

Note

If the coolant temperature indicator shows **HOT**, the indicator also starts to flash.

If the cooling system overheats, the maximum engine speed is limited.

Condition	Meaning
The coolant temperature indicator shows **LOW**.	The engine is cold
The coolant temperature indicator shows **OK**.	Engine warm
The coolant temperature indicator shows **HOT**.	Engine hot

7.19 fuel level display

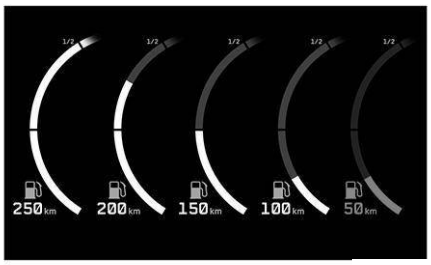

I00207-01

The fuel level display consists of the fuel range display and a bar. The higher the bar is filled, the more fuel there is in the fuel tank.

Note

Measurement of the fuel supply only becomes active after reaching half of the fuel tank content. Up to half of the fuel tank content, the fuel level display will be shown as full.

If the fuel level is getting low, the last segment flashes red and the following warning **LOW FUEL** also appears.

The fuel level is displayed with a slight delay to prevent the indicator from constantly moving while riding.

The fuel level display is not updated while the side stand is folded out or the emergency OFF switch is switched off.

Once the side stand is folded up and the kill switch is switched on, the fuel level display is next updated after 2 minutes.

The fuel level display flashes if the combination instrument does not receive a signal from the fuel level sensor.

7.20 heated grip (optional)

I00208-10

The status of the heated grip is shown in area ❶ of the display.
The heated grip can be configured in the **Heated Grip** menu.

7.21 Front rider's seat heating (optional)

I00208-11

The status of the front rider's seat heating is shown in area ❶ of the display.
The front rider's seat heating can be configured in the **Seat Heating Rider** submenu.

7.22 Passenger seat heating (optional)

I00208-11

The status of the passenger seat heating is shown in area ❶ of the display.
The seat heating can be configured in the **Seat Heating Pillion** submenu.

7.23 Favorites display

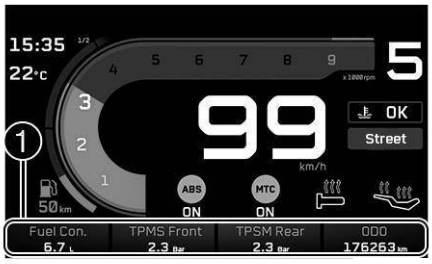

I00204-16

Up to four items of information are shown on the **Favorites** indicator.
The **Favorites** display can be freely configured in the **Favorites** submenu.

7.24 Quick Selector 1 display

I00231-01

When the menu is closed, the **Quick Selector 1** display is opened by pressing the **UP** button.

Press the **BACK** button to close the **Quick Selector 1** display.

Note

The **Quick Selector 1** display can be configured in the **Settings** menu under **Quick Selector 1**. Any information can be selected.

7.25 Quick Selector 2 display

I00232-01

When the menu is closed, the **Quick Selector 2** display is opened by pressing the **DOWN** button.

Press the **BACK** button to close the **Quick Selector 2** display.

Note

The **Quick Selector 2** display can be configured in the **Settings** menu under **Quick Selector 2**. Any information can be selected.

7.26 Navigation display

I00209-01

The **Navigation** indicator appears when the navigation function is activated.

Display **Navigation** shows the direction arrow, the distance to the destination, the estimated time of arrival of the cell phone, the distance to the next waypoint and the street name.

The **Navigation** display can be switched on or off in the **Navigation** submenu.

7.27 Call display

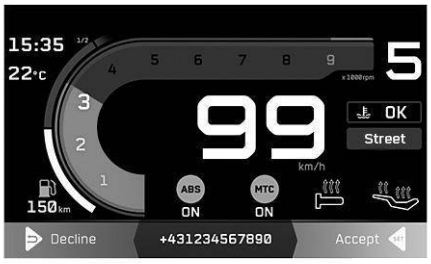

I00210-01

WARNING

Danger of accidents Headphone volume which is too high distracts attention from traffic activity.

– Always select headphone volume which is low enough for you to still clearly hear acoustic signals.

The **Call** indicator appears for incoming or active calls.

Press the **SET** button to accept an incoming call.

Press the **BACK** button to reject an incoming call.

Press the **UP** button to increase the audio volume.
Press the **DOWN** button to reduce the audio volume.

Note
It is not possible to change the audio volume using the combination switch with every cell phone.
The call duration and contact are displayed. Depending on the cell phone settings, the contact is shown by name.
You cannot navigate in the menu during an active phone conversation.

7.28 Menu

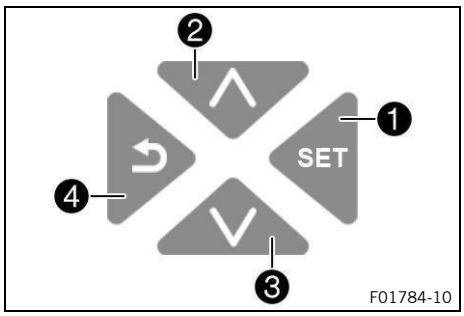

Note
Press the **SET** button ❶ in the start screen to open the menu.
Navigate through the menu using the **UP** button ❷ or the **DOWN** button ❸.
By pressing the **BACK** button ❹, the menu structure jumps one step back, or the menu is closed.

7.28.1 Motorcycle

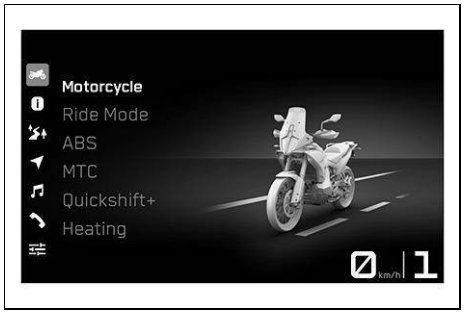

– Press the **SET** button when the menu is closed.
– Press the **UP** or **DOWN** button until **Motorcycle** is highlighted. Pressing the **SET** button opens the menu.

In **Motorcycle**, you can set the ride mode, ABS mode (optional), traction control (traction control), motor slip regulation (optional), QUICKSHIFTER+ (optional), seat heating (optional), and the grip heater (optional).

When ride mode **Rally** (optional) is activated, the characteristics of the throttle response, the slip on the rear wheel, and the **ABS** can be configured.

7.28.2 Ride Mode

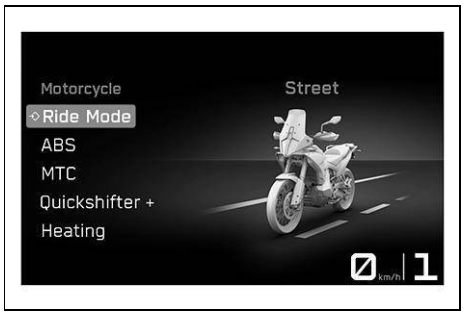

– Press the **SET** button when the menu is closed.
– Press the **UP** or **DOWN** button until **Motorcycle** is highlighted. Pressing the **SET** button opens the menu.

WARNING
Danger of accidents An incorrectly selected ride mode makes it more difficult to control the vehicle.
The riding modes are each only suitable for certain conditions.
– Always select a riding mode that suits the surface on which you are riding, the weather and the riding situation.

– Press the **UP** or **DOWN** button until **Ride Mode** is highlighted. Press the **SET** button to open the submenu.
– Activate the menu item using the **UP** or **DOWN** button.

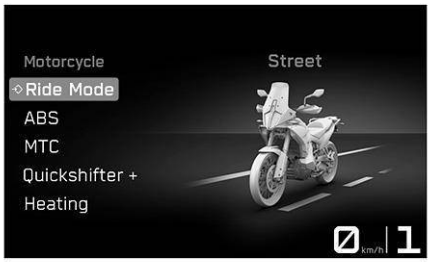

– Press the **SET** button to select the ride mode, which changes coordinated settings for the engine and motorcycle traction control.

Only use ride modes **Street** and **Rain** on asphalt.
Only use ride modes **Offroad** and **Rally** (optional) on unpaved roads.

✓ **Street** - Homologated performance with balanced response; the motorcycle traction control allows normal slip on the rear wheel. ABS regulates both wheels.

✓ **Rain** - Reduced homologated performance with soft response for improved rideability on surfaces with low road grip; the motorcycle traction control allows very little slip on the rear wheel. ABS regulates both wheels.

✓ **Offroad**- Reduced homologated performance for better rideability on unpaved roads; the motorcycle traction control allows high slip on the rear wheel. ABS only controls the front wheel.

✓ **Rally** (optional) - Setting with homologated performance and extremely direct response. The motorcycle traction control and the characteristics of the throttle response can be set individually. ABS can be configured separately.

The ride mode of the vehicle can be configured in the **Ride Mode** menu.

7.28.3 ABS

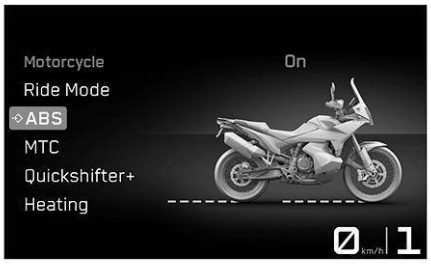

Condition: Model with **RALLY PACK**, Ride mode **Rally** (optional) is activated

– Press the **SET** button when the menu is closed.
– Press the **UP** or **DOWN** button until **Motorcycle** is highlighted. Pressing the **SET** button opens the menu.
– Press the **UP** or **DOWN** button until **ABS** is highlighted. Press the **SET** button to open the submenu.
– Activate the menu item using the **UP** or **DOWN** button.

WARNING

Danger of accidents An incorrectly selected ABS mode makes it more difficult to control the vehicle.

The ABS modes are each only suitable for certain conditions.

– Always select an ABS mode that suits the ground and the riding situation.

– Press the **SET** button to select the desired ABS mode.

Do not open the throttle during the selection.

Note

The ABS mode can be switched during the journey.

When the ABS mode **Road** is active, ABS controls both wheels.

When the **Offroad** ABS mode is active, ABS only controls the front wheel. The rear wheel is no longer controlled by ABS and may lock during braking maneuvers. The indicator lamp **ABS REAR** lights up.

7.28.4 MTC (optional)

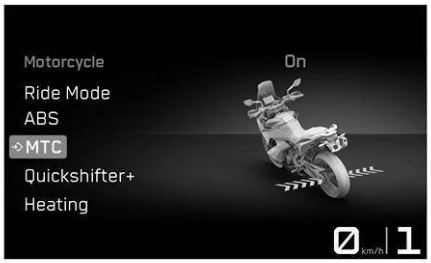

Condition: Cruise control function (optional) deactivated

- Press the **SET** button when the menu is closed.
- Press the **UP** or **DOWN** button until **Motorcycle** is highlighted. Pressing the **SET** button opens the menu.
- Press the **UP** or **DOWN** button until **MTC** is highlighted. Press the **SET** button to open the submenu.
- Activate the menu item using the **UP** or **DOWN** button.
- Switch **SET** on or off by pressing the **MTC** button.

Do not open the throttle when switching on or off.
Press the **SET** button briefly when activating the motorcycle traction control.
Hold down the **SET** button when switching off the motorcycle traction control.

Note
After the ignition is switched on, motorcycle traction control is enabled again.

7.28.5 MTC+MSR (optional)

Condition: Model with **MTC+MSR**, Cruise control function (optional) deactivated

- Press the **SET** button when the menu is closed.
- Press the **UP** or **DOWN** button until **Motorcycle** is highlighted. Pressing the **SET** button opens the menu.
- Press the **UP** or **DOWN** button until **MTC+MSR** is highlighted. Press the **SET** button to open the submenu.
- Activate the menu item using the **UP** or **DOWN** button.
- Switch **SET** on or off by pressing the **MTC+MSR** button.

Do not open the throttle when switching on or off.
Press the **SET** button briefly when activating the motorcycle traction control and the engine traction torque control.
Hold down the **SET** button when switching off the motorcycle traction control and engine traction torque control.

Note
When ABS mode **Offroad** is active, the **MSR** is not active.
After the ignition is switched on, the motorcycle traction control and engine traction torque control are enabled again.

7.28.6 QUICKSHIFTER+ (optional)

Condition: Model with QUICKSHIFTER+

- Press the **SET** button when the menu is closed.
- Press the **UP** or **DOWN** button until **Motorcycle** is highlighted. Pressing the **SET** button opens the menu.
- Press the **UP** or **DOWN** button until **QUICKSHIFTER+** is highlighted. Press the **SET** button to open the submenu.
- Activate the menu item using the **UP** or **DOWN** button.
- Press the **SET** button to switch QUICKSHIFTER+ (p. 81) button on or off.

7.28.7 Grip Heating (optional)

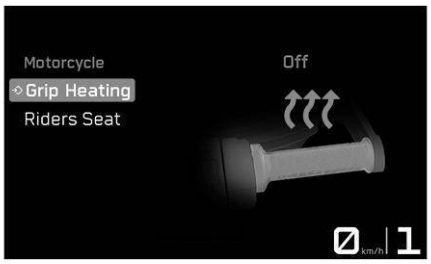

Condition: Model with grip heater, Menu **Heated Grips** (optional) activated

- Press the **SET** button when the menu is closed.
- Press the **UP** or **DOWN** button until **Motorcycle** is highlighted. Pressing the **SET** button opens the menu.
- Press the **UP** or **DOWN** button until **Heating** is highlighted. Press the **SET** button to open the submenu.
- Press the **UP** or **DOWN** button until **Grip Heating** is highlighted. Press the **SET** button to open the submenu.
- Activate the menu item using the **UP** or **DOWN** button.
- Press the **SET** button to select the heating level or to switch the heated grip on or off.

7.28.8 Riders Seat (optional)

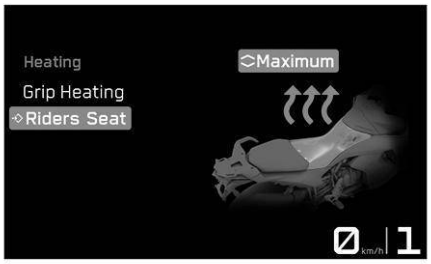

Condition: Model with seat heating, Menu **Seat Heating Rider** (optional) activated

- Press the **SET** button when the menu is closed.
- Press the **UP** or **DOWN** button until **Motorcycle** is highlighted. Pressing the **SET** button opens the menu.
- Press the **UP** or **DOWN** button until **Heating** is highlighted. Press the **SET** button to open the submenu.
- Press the **UP** or **DOWN** button until **Riders Seat** is highlighted. Press the **SET** button to open the submenu.
- Activate the menu item using the **UP** or **DOWN** button.
- Press the **SET** button to select the heating level or to switch the front rider's seat heating on or off.

Note
The heating level for the passenger seat heating is selected using the switch next to the right grab handle.

7.28.9 Throttle Response (optional)

Condition: Model with **RALLY PACK**, Ride mode **Rally** (optional) is activated

– Press the **SET** button when the menu is closed.

WARNING

Danger of accidents An incorrectly selected ride mode makes it more difficult to control the vehicle.

The riding modes are each only suitable for certain conditions.

– Always select a riding mode that suits the surface on which you are riding, the weather and the riding situation.

– Press the **UP** or **DOWN** button until **Motorcycle** on the display is highlighted. Pressing the **SET** button opens the menu.
– Press the **UP** or **DOWN** button until **Throttle Response** on the display is highlighted. Press the **SET** button to open the submenu.
– Use the **UP** or **DOWN** button to select a menu item.
– The characteristic map of the throttle response can be adjusted by pressing the **SET** button.

Do not open the throttle when adjusting the throttle response.

✓ Street – balanced response.
✓ Rally – extremely direct response.
✓ Offroad – very direct response.

7.28.10 Slip Adjuster (optional)

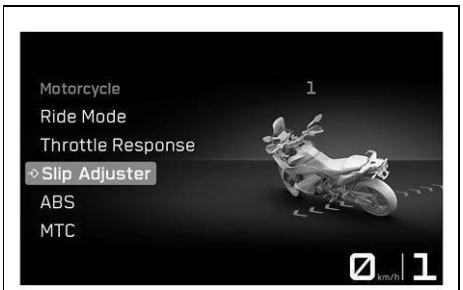

Condition: Ride mode **Rally** (optional) is activated, **MTC + MSR** is activated

– Press the **SET** button when the menu is closed.

WARNING

Danger of accidents An incorrectly selected ride mode makes it more difficult to control the vehicle.

The riding modes are each only suitable for certain conditions.

– Always select a riding mode that suits the surface on which you are riding, the weather and the riding situation.

– Press the **UP** or **DOWN** button until **Motorcycle** on the display is highlighted. Pressing the **SET** button opens the menu.
– Press the **UP** or **DOWN** button until **Slip Adjuster** is highlighted. Press the **SET** button to open the submenu.
– Activate the menu item using the **UP** or **DOWN** button.
– Press the **SET** button to set the maximum permitted slip for the motorcycle traction control.

Do not open the throttle during the selection.

The spin adjuster is a motorcycle traction control function.

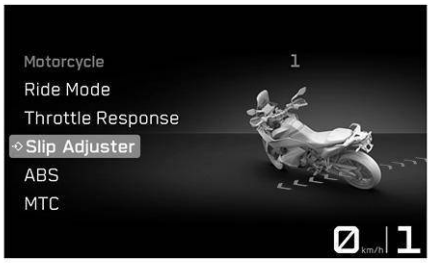

The slip adjustment allows the motorcycle traction control to be tuned through nine levels to the desired characteristic map.

Level 0 allows maximum slip on the rear wheel, and level 9 allows the minimum.

If the cruise control function is deactivated, buttons **UP** and **DOWN** in the main display or in menu **Slip Adjuster** can be used to set **Slip Adjuster**.

Note

The slip adjustment is only available in **Rally** riding mode (optional).

The spin adjuster is only available when motorcycle traction control is activated.

– **DOWN** Press and hold button for approximately 2 seconds.	Slip adjustment level 0 is activated.

7.28.11 Bike info

– Press the **SET** button when the menu is closed.
– Press the **UP** or **DOWN** button until **Bike Info** is highlighted. Pressing the **SET** button opens the menu.

General information and warnings that may be present can be called up in **Bike Info**.

7.28.12 Bike info

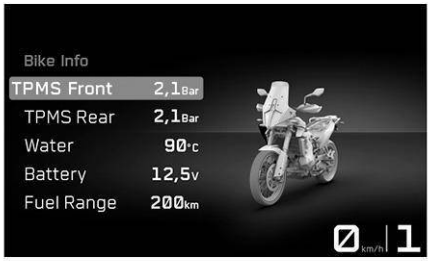

– Press the **SET** button when the menu is closed.
– Press the **UP** or **DOWN** button until **Bike Info** is highlighted. Press the **SET** button to open the menu.

Tire Pressure (optional function) shows the current tire pressure of the front and rear tires.

Water displays the coolant temperature.

Fuel Range indicates the possible fuel range you can cover with the fuel reserve.

Battery displays the battery voltage.

Odometer displays the total mileage.

Service displays when the next service is due.

Warnings displays warnings that have occurred until they are no longer active.

7.28.13 Warning

Condition: Message or warning is present

- Press the **SET** button when the menu is closed.
- Press the **UP** or **DOWN** button until **Bike Info** is highlighted. Pressing the **SET** button opens the menu.
- Press the **UP** or **DOWN** button until **Warning** is highlighted. Press the **SET** button to open the submenu.
- Use the **UP** or **DOWN** button to navigate through the warnings.

Note
The warnings that have occurred are saved in the display until they are no longer active.

7.28.14 Trip info

- Press the **SET** button when the menu is closed.
- Press the **UP** or **DOWN** button until **Trip** is highlighted. Pressing the **SET** button opens the menu.

General information on the distance traveled, trip time, average fuel consumption, and average speed can be accessed in menu **Trip**.

7.28.15 Trip 1

- Press the **SET** button when the menu is closed.
- Press the **UP** or **DOWN** button until **Trip** is highlighted. Press **SET** button to open the menu.
- Press the **UP** or **DOWN** button until **Trip 1** is highlighted. Press the **SET** button to open the submenu.

Information on **Trip 1** can be viewed in the **Trip 1** submenu.

Note
Trip displays the distance since the last reset, e.g. between two refueling stops. **Trip** runs along and counts to **9999**.

Trip Time shows the riding time on the basis of **Trip** and runs as soon as a speed signal is received.

ØConsump. indicates the average fuel consumption based on **Trip**.

ØSpeed indicates the average speed based on **Trip** and **Trip Time**.

Press **Reset Trip** to reset all entries in the **Trip 1** menu.

7.28.16 Trip 2

– Press the **SET** button when the menu is closed.
– Press the **UP** or **DOWN** button until **Trip** is highlighted. Press **SET** button to open the menu.
– Press the **UP** or **DOWN** button until **Trip 2** is highlighted. Press the **SET** button to open the submenu.

Information on **Trip 2** can be viewed in the **Trip 2** submenu.

Note

Trip displays the distance since the last reset, e.g. between two refueling stops. **Trip** runs along and counts to **9999**.

Trip Time shows the riding time on the basis of **Trip** and runs as soon as a speed signal is received.

ØConsump. indicates the average fuel consumption based on **Trip**.

ØSpeed indicates the average speed based on **Trip** and **Trip Time**.

Press **Reset Trip** to reset all entries in the **Trip 2** menu.

7.28.17 Navigation (optional)

Condition: Function **Bluetooth®** activated, **KTMconnect** app (optional) is installed and opened on a suitable cell phone (Android devices from version 7.0, iOS devices from version 13), The dashboard is connected to a suitable cell phone, GPS function is activated on the connected cell phone, For voice navigation: The dashboard is connected to a suitable communication system and an appropriate language package has been downloaded in the **KTMconnect Navigation** app (optional).

– Press the **SET** button when the menu is closed.
– Press the **UP** or **DOWN** button until **Navigation** is marked. Pressing the **SET** button opens the menu.
– Activate the menu item using the **UP** or **DOWN** button.

Press the **SET** button to switch the visual navigation on or off.

Note

Voice navigation remains switched on if it has been activated.

The volume of the activated voice navigation is identical to the volume of the audio player on the cell phone. If the volume on the cell phone is changed, the volume of the activated voice navigation also changes.

7.28.18 Last search (optional)

Condition: Function **Bluetooth®** activated, **KTMconnect** app (optional) is installed and opened on a suitable cell phone (Android devices from version 7.0, iOS devices from version 13), The dashboard is connected to a suitable cell phone, GPS function is activated on the connected cell phone, The addresses sought can be found in the **KTMconnect** app (optional)

- Press the **SET** button when the menu is closed.
- Press the **UP** or **DOWN** button until **Navigation** is marked. Pressing the **SET** button opens the menu.
- Activate the menu item using the **UP** or **DOWN** button.
- Press the **UP** or **DOWN** button until **Last search** is marked. Press the **SET** button to open the submenu.
- Press the **UP** or **DOWN** button to select an address.
- Press the **SET** button to confirm the selection and start navigation.

Note
The last 10 addresses searched for in the **Last search** app (optional) are saved in **KTMconnect**.

7.28.19 Favorites (optional)

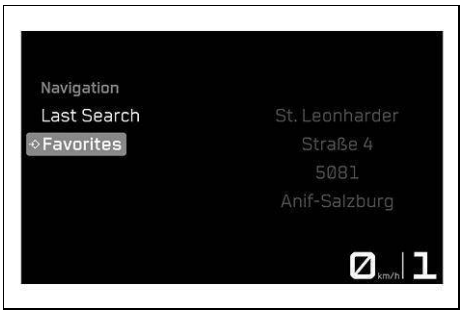

Condition: Function **Bluetooth®** activated, **KTMconnect** app (optional) is installed and opened on a suitable cell phone (Android devices from version 7.0, iOS devices from version 13), The dashboard is connected to a suitable cell phone, GPS function is activated on the connected cell phone, Favorites are saved in the **KTMconnect** app (optional)

- Press the **SET** button when the menu is closed.
- Press the **UP** or **DOWN** button until **Navigation** is marked. Pressing the **SET** button opens the menu.
- Activate the menu item using the **UP** or **DOWN** button.
- Press the **UP** or **DOWN** button until **Favorites** is marked. Press the **SET** button to open the submenu.
- Press the **UP** or **DOWN** button to select an address.
- Press the **SET** button to confirm the selection and start navigation.

Note
10 addresses in the **Favorites** app (optional) can be stored in **KTMconnect**.

7.28.20 Skip Waypoint (optional)

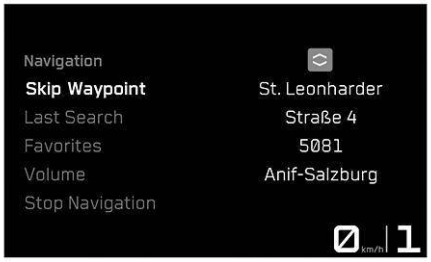

Condition: Function **Bluetooth®** activated, **KTMconnect** app (optional) is installed and opened on a suitable cell phone, The dashboard is connected to a suitable cell phone, GPS function is activated on the connected cell phone, Navigation with at least one interim destination has been started in the **KTMconnect** app (optional)

- Press the **SET** button when the menu is closed.
- Press the **UP** or **DOWN** button until **Navigation** is marked. Pressing the **SET** button opens the menu.
- Activate the menu item using the **UP** or **DOWN** button.
- Press the **UP** or **DOWN** button until **Skip Waypoint** is marked. Press **SET** to select the waypoint.
- Press the **SET** button again to confirm the selection and the waypoint is removed.

7.28.21 Volume (optional)

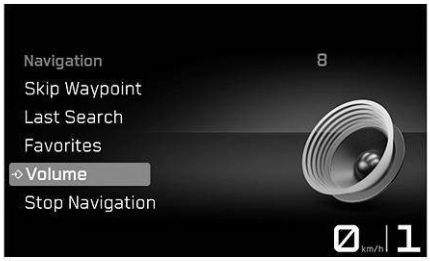

Condition: **KTMconnect** app (optional) is installed and opened on a suitable cell phone (Android devices from version 7.0, iOS devices from version 13), Dashboard is connected to a suitable cell phone, For voice navigation: The dashboard is connected to a suitable communication system and an appropriate language package has been downloaded in the **KTMconnect** app (optional)

- Press the **SET** button when the menu is closed.
- Press the **UP** or **DOWN** button until **Navigation** is marked. Pressing the **SET** button opens the menu.
- Activate the menu item using the **UP** or **DOWN** button.

WARNING

Danger of accidents Headphone volume which is too high distracts attention from traffic activity.

- Always select headphone volume which is low enough for you to still clearly hear acoustic signals.

- Press the **UP** or **DOWN** button until **Volume** is marked. Pressing the **SET** button opens the menu.
- Press the **UP** button to increase the volume of the activated voice navigation.
- Press the **DOWN** button to reduce the volume of the activated voice navigation.

7.28.22 Stop Navigation (optional)

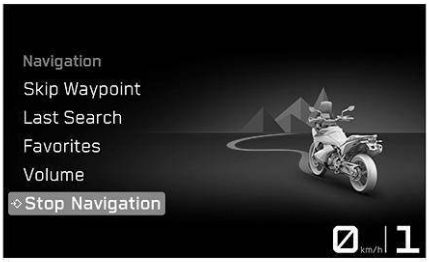

Condition: Function **Bluetooth®** activated, **KTMconnect** app (optional) is installed and opened on a suitable cell phone (Android devices from version 7.0, iOS devices from version 13), The dashboard is connected to a suitable cell phone

- Press the **SET** button when the menu is closed.
- Press the **UP** or **DOWN** button until **Navigation** is marked. Pressing the **SET** button opens the menu.
- Activate the menu item using the **UP** or **DOWN** button.
- Press the **UP** or **DOWN** button until **Stop Navigation** is marked. Press the **SET** button to confirm the selection.
- Press the **SET** button again to confirm the selection and end navigation.

7.28.23 Audio

Condition: Function **Bluetooth®** activated, Dashboard is connected to a suitable cell phone, The dashboard is connected to a suitable audio device or **Headset Type Corded** is selected.

- Press the **SET** button when the menu is closed.
- Press the **UP** or **DOWN** button until **KTMconnect** (optional) is highlighted. Pressing the **SET** button opens the menu.

WARNING

Danger of accidents Headphone volume which is too high distracts attention from traffic activity.

- Always select headphone volume which is low enough for you to still clearly hear acoustic signals.

- Press the **UP** or **DOWN** button until **Audio** is highlighted. Press the **SET** button to open the submenu.
- Press and hold **UP** button to increase the audio volume.
- Press and hold **DOWN** button to reduce the audio volume.
- Press **UP** button briefly to change to the next audio track.
- Briefly pressing the **DOWN** button once or twice replays the current audio track from the start or changes to the previous audio track, depending on the cell phone model.
- Press **SET** button to play or pause the audio track.

Note

With some cell phones, the cell phone audio player needs to be started before playback is possible.

The audio function can be added to **Quick Selector 1** or **Quick Selector 2** for easier operation.

7.28.24 call

Condition: Function **Bluetooth®** activated, Function **Bluetooth®** also activated on the device that is to be paired, Dashboard is connected to a suitable cell phone, Dashboard is connected to a suitable audio device

WARNING

Danger of accidents Headphone volume which is too high distracts attention from traffic activity.

– Always select headphone volume which is low enough for you to still clearly hear acoustic signals.

– Press the **SET** button to accept an incoming call.
– Press the **BACK** button to reject an incoming call.
– Press and hold **UP** button to increase the audio volume.
– Press and hold **DOWN** button to reduce the audio volume.

Note

It is not possible to change the audio volume using the combination switch with every cell phone.

The call duration and contact are displayed. Depending on the cell phone settings, the contact is shown by name.

If necessary, accessing contacts must be enabled on the cell phone.

An incoming call is shown in a small window at the top of the combination instrument display when the navigation function is active.

You cannot navigate in the menu during an active phone conversation.

7.28.25 Call out

Condition: Function **Bluetooth®** activated, Dashboard is connected to a suitable cell phone, Dashboard is connected to a suitable audio device

– Press the **SET** button when the menu is closed.
– Press **UP** or **DOWN** button until **Call** appears. Pressing the **SET** button opens the menu.
– Press the **UP** or **DOWN** button until **Last Calls** or **Favorites** is highlighted. Press the **SET** button to open the submenu.
– Press the **UP** or **DOWN** button until the desired person is marked.
– Press the **SET** button.
✓ The selected person is called.

Note

It is not possible to change the audio volume using the combination switch with every cell phone.

The call duration and contact are displayed. Depending on the cell phone settings, the contact is shown by name.

Accessing contacts must be enabled on the cell phone.

An incoming call is shown in a small window at the top of the combination instrument display when the navigation function is active.

You cannot navigate in the menu during an active phone conversation.

7.28.26 Settings

Condition: Motorcycle is stationary

- Press the **SET** button when the menu is closed.
- Press the **UP** or **DOWN** button until **Settings** is highlighted. Pressing the **SET** button opens the menu.

In the **Settings** menu, favorites, quick selections, **KTMconnect** (optional), and the shift warning light can be configured. Settings can be made for units or various values. Several functions can be enabled or disabled.

7.28.27 favorites

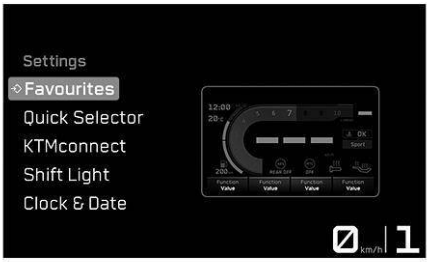

Condition: Motorcycle is stationary

- Press the **SET** button when the menu is closed.
- Press the **UP** or **DOWN** button until **Settings** is highlighted.
- Press the **SET** button to open the menu.
- Press the **UP** or **DOWN** button until **Favorites** is highlighted. Press the **SET** button to open the submenu.
- Use the **UP** or **DOWN** button to select a menu item and use the **SET** button to add the selected information to the **Favorites** display.

Up to four sets of information can be selected in the **Favorites** menu.

7.28.28 Favorites–display 1–4

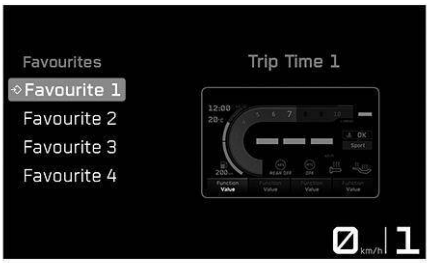

Condition: Motorcycle is stationary

- Press the **SET** button when the menu is closed.
- Press the **UP** or **DOWN** button until **Settings** is highlighted.
- Press the **SET** button to open the menu.
- Press the **UP** or **DOWN** button until **Favorites** is highlighted. Press the **SET** button to open the submenu.
- Press the **UP** or **DOWN** button to select **Favorite 1**, **Favorite 2**, **Favorite 3**, or **Favorite 4**. Press the **SET** button to open the submenu.
- Press the **UP** or **DOWN** button to select the desired information. Press the **SET** button to confirm the selection.

7.28.29 Quick Selector 1

Condition: Motorcycle is stationary

- Press the **SET** button when the menu is closed.
- Press the **UP** or **DOWN** button until **Settings** is highlighted.
- Press the **SET** button to open the menu.
- Press the **UP** or **DOWN** button until **Quick Selector 1** is highlighted. Press the **SET** button to open the submenu.
- Activate the menu item using the **UP** or **DOWN** button.
- Press the **SET** button to set a direct selection submenu for **Quick Selector 1**.

Note
When the menu is closed, the submenu defined in **UP** is opened by pressing the **Quick Selector 1** button.

7.28.30 Quick selector 2

Condition: Motorcycle is stationary

- Press the **SET** button when the menu is closed.
- Press the **UP** or **DOWN** button until **Settings** is highlighted.
- Press the **SET** button to open the menu.
- Press the **UP** or **DOWN** button until **Quick Selector 2** is highlighted. Press the **SET** button to open the submenu.
- Activate the menu item using the **UP** or **DOWN** button.
- Press the **SET** button to set a direct selection submenu for **Quick Selector 2**.

Note
When the menu is closed, the submenu defined in **DOWN** is opened by pressing the **Quick Selector 2** button.

7.28.31 KTMconnect (optional)

Condition: Motorcycle is stationary, Function **Bluetooth®** activated

- Press the **SET** button when the menu is closed.
- Press the **UP** or **DOWN** button until **KTMconnect** (optional) is highlighted. Pressing the **SET** button opens the menu.

In menu **KTMconnect** (optional), an appropriate cell phone or audio device can be paired with the dashboard via **Bluetooth®** and the audio function and navigation function can be configured.

Note
Not every cell phone or communication system is suitable for pairing with the dashboard.
The standard **Bluetooth®** 2.1 must be supported.

7.28.32 Bluetooth

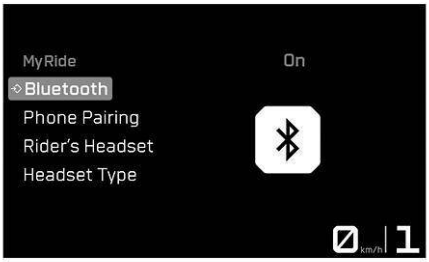

Condition: Motorcycle is stationary

- Press the **SET** button when the menu is closed.
- Press the **UP** or **DOWN** button until **Settings** is highlighted.
- Press the **SET** button to open the menu.
- Press the **UP** or **DOWN** button until **KTMconnect** (optional) is highlighted. Press the **SET** button to open the submenu.
- Press the **UP** or **DOWN** button until **Bluetooth** is highlighted. Press the **SET** button to open the submenu.
- Activate the menu item using the **UP** or **DOWN** button.
- Press the **SET** button to switch the **Bluetooth®** function on or off.

Note

Function **Bluetooth®** must be activated to pair a suitable cell phone or communication system with the vehicle.

Not every cell phone or communication system is suitable for pairing with the vehicle.

7.28.33 Pairing

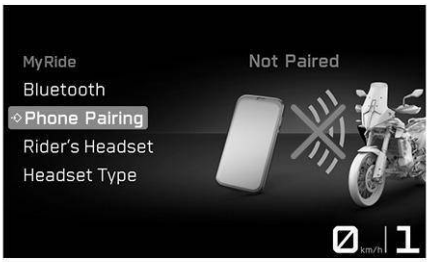

Condition: Motorcycle is stationary, Function **Bluetooth®** activated

- Press the **SET** button when the menu is closed.
- Press the **UP** or **DOWN** button until **Settings** is highlighted. Press **SET** button to open the menu.
- Press the **UP** or **DOWN** button until **KTMconnect** (optional) is highlighted. Press the **SET** button to open the submenu.
- Press the **UP** or **DOWN** button until **Phone Pairing** is highlighted. Press the **SET** button to open the submenu.

Note

Only one cell phone can be paired with the vehicle at a time.

- Press the **UP** or **DOWN** button until **New Pairing** is marked. Pressing the **SET** button opens the menu.
- The vehicle starts the search for a suitable cell phone. If the search is successful, the name of the cell phone is displayed in menu **New Pairing**. Press the **SET** button to start the pairing.

Note

The cell phone must be visible via **Bluetooth®** in order for the cell phone to be found by the vehicle.

- A message appears on the combination instrument indicating that the vehicle is now ready for pairing. The pairing is successfully completed by confirming the **Passkey** on the cell phone and on the dashboard.

Note

Press the **UP** or **DOWN** button until **Delete Pairing** is highlighted. The paired device can be deleted by pressing the **SET** button.

Not every cell phone is suitable for pairing with the vehicle.

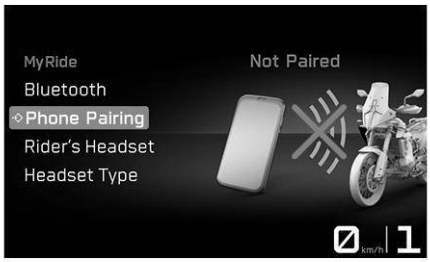

– Move the previously paired device into the range of the vehicle while the **Bluetooth®** function is active.
  ✓ The device is automatically connected with the vehicle.
  ✗ If the device is not automatically connected with the vehicle after approx. 30 seconds:
    – Switch on the vehicle again or repeat the **New Pairing** procedure.

In submenu **Phone Pairing**, a suitable cell phone can be paired with the dashboard via **Bluetooth®**.

Note

Not every cell phone or audio device is suitable for pairing with the dashboard.

Make sure the end device is in the correct pairing mode for call management. If the end device is only paired for media playback, the call function may not work.

7.28.34 Riders Headset (optional)

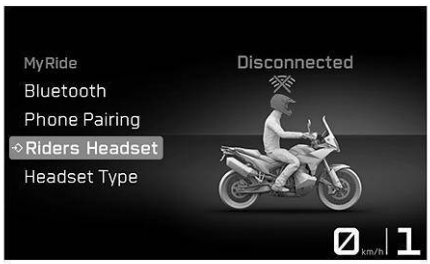

Condition: Motorcycle is stationary, Function **Bluetooth®** activated, Function **Bluetooth®** also activated on the device that is to be paired

– Press the **SET** button when the menu is closed.
– Press the **UP** or **DOWN** button until **Settings** is highlighted. Press **SET** button to open the menu.
– Press the **UP** or **DOWN** button until **KTMconnect** (optional) is highlighted. Press the **SET** button to open the submenu.
– Press the **UP** or **DOWN** button until **Riders Headset** is highlighted. Press the **SET** button to open the submenu.
– Press the **UP** or **DOWN** button until **New Pairing** is marked. Press the **SET** button to open the submenu.
– The vehicle starts searching for a suitable headset. If the search was successful, the name of the rider's audio device is displayed in the **New Pairing** submenu. Press the **SET** button to start the pairing.

Note

The headset must be in pairing mode for the vehicle to find the headset. Follow the instructions in the headset owner's manual.

Press the **UP** or **DOWN** button until **Delete Pairing** is highlighted. The paired device can be deleted by pressing the **SET** button.

Not every headset is suitable for pairing with the vehicle.

– Move the previously paired device into the range of the vehicle while the **Bluetooth®** function is active.
  ✓ The device is automatically connected with the vehicle.
  ✗ If the device is not automatically connected with the vehicle after approx. 30 seconds:
    – Switch on the vehicle again or repeat the **New Pairing** procedure.

In the **Riders Headset** menu, a suitable rider headset can be paired with the vehicle.

7.28.35 Headset Type (optional)

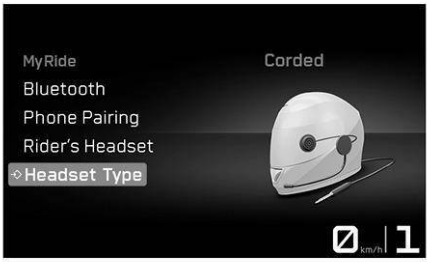

Condition: Motorcycle is stationary

- Press the **SET** button when the menu is closed.
- Press the **UP** or **DOWN** button until **Settings** is highlighted. Press **SET** button to open the menu.
- Press the **UP** or **DOWN** button until **KTMconnect** (optional) is highlighted. Press the **SET** button to open the submenu.
- Press the **UP** or **DOWN** button until **Headset Type** is highlighted. Press the **SET** button to change the rider audio device type.

The connection mode for the rider headset can be selected in the **Headset Type** menu.

The headset is connected to the vehicle wirelessly via **Bluetooth®** in **Bluetooth Headset** mode.

The headset is connected directly to the smartphone in **Corded Headset** mode.

Note

The **Riders Headset** menu item is only available in **Headset Type Bluetooth**.

7.28.36 Shift Light

Condition: Motorcycle is stationary, **ODO** > 1,000 km (621 miles)

- Press the **SET** button when the menu is closed.
- Press the **UP** or **DOWN** button until **Settings** is highlighted. Press **SET** button to open the menu.
- Press the **UP** or **DOWN** button until **Shift Light** is highlighted. Press the **SET** button to open the submenu.

The shift warning light can be configured in the **Shift Light** sub-menu.

7.28.37 Shift light state

Condition: Motorcycle is stationary, **ODO** > 1,000 km (621 miles)

- Press the **SET** button when the menu is closed.
- Press the **UP** or **DOWN** button until **Settings** is highlighted. Press **SET** button to open the menu.
- Press the **UP** or **DOWN** button until **Shift Light** is highlighted. Press the **SET** button to open the submenu.
- Activate the menu item using the **UP** or **DOWN** button.
- Press the **SET** button to switch the shift warning light on or off.

7.28.38 RPM1

Condition: Motorcycle is stationary, **ODO** > 1,000 km (621 miles)

- Press the **SET** button when the menu is closed.
- Press the **UP** or **DOWN** button until **Settings** is highlighted. Press **SET** button to open the menu.
- Press the **UP** or **DOWN** button until **Shift Light** is highlighted. Press the **SET** button to open the submenu.
- Press the **UP** or **DOWN** button until **RPM1** is highlighted. Press the **SET** button to open the submenu.
- Activate the menu item using the **UP** or **DOWN** button.
- Set the value for **SET** by pressing the **RPM1** button.

Note

RPM1 can be set in intervals of 500 between 5,500 and 10,000 rpm.

RPM1 must not be larger than **RPM2**.

If the engine speed reaches the set value **RPM1**, the shift warning light flashes.

7.28.39 RPM2

Condition: Motorcycle is stationary, **ODO** > 1,000 km (621 miles)

- Press the **SET** button when the menu is closed.
- Press the **UP** or **DOWN** button until **Settings** is highlighted. Press **SET** button to open the menu.
- Press the **UP** or **DOWN** button until **Shift Light** is highlighted. Press the **SET** button to open the submenu.
- Press the **UP** or **DOWN** button until **RPM2** is highlighted. Press the **SET** button to open the submenu.
- Activate the menu item using the **UP** or **DOWN** button.
- Set the value for **SET** by pressing the **RPM2** button.

Note

RPM2 can be set in intervals of 500 between 7,000 and 10,000 rpm.

RPM2 must not be smaller than **RPM1**.

If the engine speed reaches the set value **RPM2**, the shift warning light flashes and the color changes.

7.28.40 Setting the time and date

Condition: Motorcycle is stationary

I00245-01

- Press the **SET** button when the menu is closed.
- Press **UP** or **DOWN** button until **Settings** appears. Pressing the **SET** button opens the menu.
- Press the **UP** or **DOWN** button until **Clock & Date** is highlighted. Press the **SET** button to open the submenu.

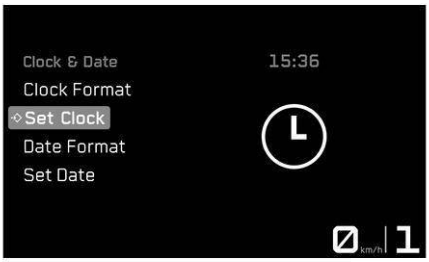

I00247-01

Setting the clock

- Press the **UP** or **DOWN** button until **Set Clock** is marked.
- Pressing the **SET** button opens the menu.
- Press the **UP** or **DOWN** button until **Hours** is highlighted.
- Pressing the **SET** button opens the menu.
- Press the **UP** or **DOWN** button until the hour is set. Press the **SET** button to select the hour.
- Press the **UP** or **DOWN** button until **Minutes** is highlighted.
- Pressing the **SET** button opens the menu.
- Press the **UP** or **DOWN** button until the minute is set. Press the **SET** button to select the minute.
- Press the **BACK** button to exit the menu.

I00249-01

Setting the date

- Press the **UP** or **DOWN** button until **Set Date** is marked.
- Pressing the **SET** button opens the menu.
- Press the **UP** or **DOWN** button until **Day** is highlighted.
- Pressing the **SET** button opens the menu.
- Press the **UP** or **DOWN** button until the day is set. Press the **SET** button to select the day.
- Press the **UP** or **DOWN** button until **Month** is highlighted.
- Pressing the **SET** button opens the menu.
- Press the **UP** or **DOWN** button until the month is set. Press the **SET** button to select the month.
- Press the **UP** or **DOWN** button until **Year** is highlighted.
- Pressing the **SET** button opens the menu.
- Press the **UP** or **DOWN** button until the year is set. Press the **SET** button to select the year.
- Press the **BACK** button to exit the menu.

7.28.41 Clock format

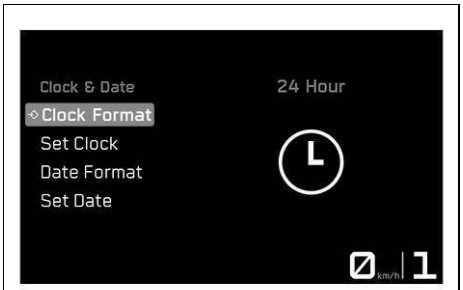

Condition: Motorcycle is stationary

- Press the **SET** button when the menu is closed.
- Press the **UP** or **DOWN** button until **Settings** is highlighted. Press **SET** button to open the menu.
- Press the **UP** or **DOWN** button until **Clock & Date** is highlighted. Press the **SET** button to open the submenu.
- Press the **UP** or **DOWN** button until **Clock Format** is highlighted. Press the **SET** button to open the submenu.
- Activate the menu item using the **UP** or **DOWN** button.
- Press the **SET** button to select the time format.

7.28.42 Date format

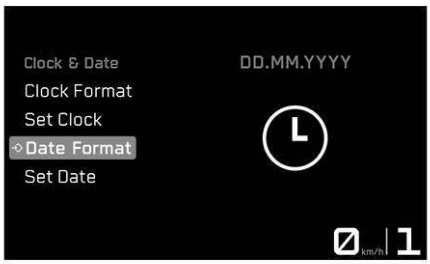

Condition: Motorcycle is stationary

- Press the **SET** button when the menu is closed.
- Press the **UP** or **DOWN** button until **Settings** is highlighted. Press **SET** button to open the menu.
- Press the **UP** or **DOWN** button until **Clock & Date** is highlighted. Press the **SET** button to open the submenu.
- Press the **UP** or **DOWN** button until **Date Format** is highlighted. Press the **SET** button to open the submenu.
- Activate the menu item using the **UP** or **DOWN** button.
- Press the **SET** button to select the date format.

7.28.43 Units

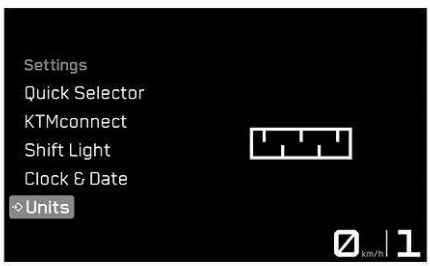

Condition: Motorcycle is stationary

- Press the **SET** button when the menu is closed.
- Press the **UP** or **DOWN** button until **Settings** is highlighted. Press **SET** button to open the menu.
- Press the **UP** or **DOWN** button until **Units** is highlighted. Press the **SET** button to open the submenu.

The **Units** submenu allows settings to be made for units or various values.

7.28.44 Distance

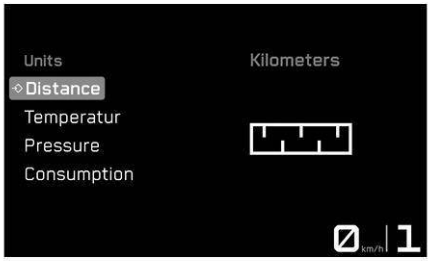

Condition: Motorcycle is stationary

- Press the **SET** button when the menu is closed.
- Press the **UP** or **DOWN** button until **Settings** is highlighted. Press **SET** button to open the menu.
- Press the **UP** or **DOWN** button until **Units** is highlighted. Press the **SET** button to open the submenu.
- Press the **UP** or **DOWN** button until **Distance** is marked. Press the **SET** button to open the submenu.
- Activate the menu item using the **UP** or **DOWN** button.
- Press the **SET** button to confirm the desired unit.

7.28.45 Temperature

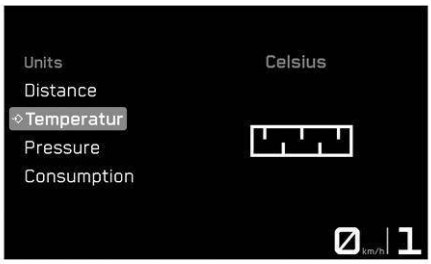

Condition: Motorcycle is stationary

- Press the **SET** button when the menu is closed.
- Press the **UP** or **DOWN** button until **Settings** is highlighted. Press **SET** button to open the menu.
- Press the **UP** or **DOWN** button until **Units** is highlighted. Press the **SET** button to open the submenu.
- Press the **UP** or **DOWN** button until **Temperature** is marked. Press the **SET** button to open the submenu.
- Activate the menu item using the **UP** or **DOWN** button.
- Press the **SET** button to confirm the desired unit.

7.28.46 Pressure

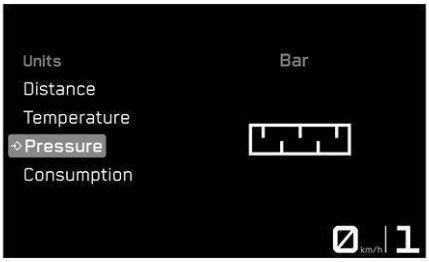

Condition: Motorcycle is stationary

- Press the **SET** button when the menu is closed.
- Press the **UP** or **DOWN** button until **Settings** is highlighted. Press **SET** button to open the menu.
- Press the **UP** or **DOWN** button until **Units** is highlighted. Press the **SET** button to open the submenu.
- Press the **UP** or **DOWN** button until **Pressure** is marked. Press the **SET** button to open the submenu.
- Activate the menu item using the **UP** or **DOWN** button.
- Press the **SET** button to confirm the desired unit.

7.28.47 Consumption

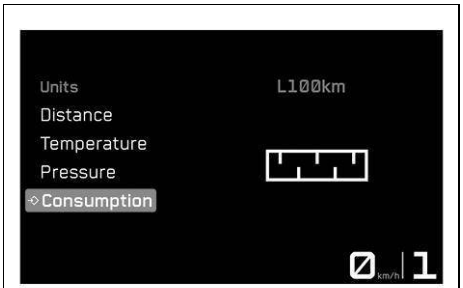

Condition: Motorcycle is stationary

- Press the **SET** button when the menu is closed.
- Press the **UP** or **DOWN** button until **Settings** is highlighted. Press **SET** button to open the menu.
- Press the **UP** or **DOWN** button until **Units** is highlighted. Press the **SET** button to open the submenu.
- Press the **UP** or **DOWN** button until **Consumption** is marked. Press the **SET** button to open the submenu.
- Activate the menu item using the **UP** or **DOWN** button.
- Press the **SET** button to confirm the desired unit.

7.28.48 Language

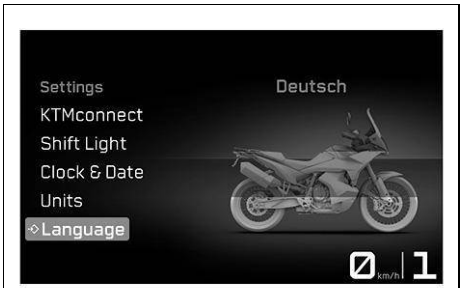

Condition: Motorcycle is stationary

- Press the **SET** button when the menu is closed.
- Press the **UP** or **DOWN** button until **Settings** is highlighted.
- Press the **SET** button to open the menu.
- Press the **UP** or **DOWN** button until **Language** is highlighted. Press the **SET** button to open the submenu.
- Activate the menu item using the **UP** or **DOWN** button.
- Press the **SET** button to confirm the desired language.

Note

The menu languages are US English, UK English, German, Italian, French, and Spanish.

7.28.49 DRL

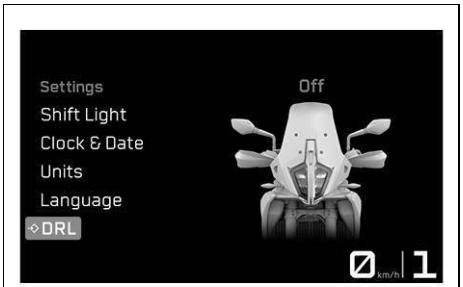

Condition: Motorcycle is stationary

- Press the **SET** button when the menu is closed.
- Press the **UP** or **DOWN** button until **Settings** is highlighted.
- Press the **SET** button to open the menu.
- Press the **UP** or **DOWN** button until **DRL** is highlighted. Press the **SET** button to open the submenu.

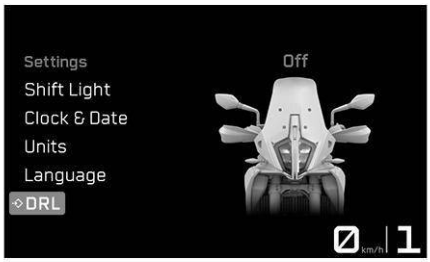

WARNING

Danger of accidents When visibility is poor, the daytime running light is not a substitute for the low beam.

Automatic switching between the daytime running light and low beam may only be partially available when visibility is impaired due to fog, snow or rain.

- Ensure that the appropriate type of lighting is always selected.
- If necessary switch off the daytime running lights using the menu before going on a ride or when stopped so that the low beam is switched on permanently.
- Make sure that the daytime running light is deactivated with the diagnostic tool when the menu item is not available, but the low beam is required.
- Note the legal regulations regarding the daytime running light.

- Activate the menu item using the **UP** or **DOWN** button.
- Press the **SET** button to switch the daytime running light on or off.

7.28.50 Heating (function optional)

Condition: Motorcycle is stationary

- Press the **SET** button when the menu is closed.
- Press the **UP** or **DOWN** button until **Settings** is highlighted. Press the **SET** button to open the menu.
- Press the **UP** or **DOWN** button until **Heating** is highlighted. Press the **SET** button to open the submenu.

The grip heater, heated rider seat and heated passenger seat can be configured in submenu **Heating**.

Note

In the **Settings** menu, the **Heating** submenu solely controls the visibility of **Heated Grips** and **Seat Heating** in the **Motorcycle** menu.

7.28.51 Heated Grips (function optional)

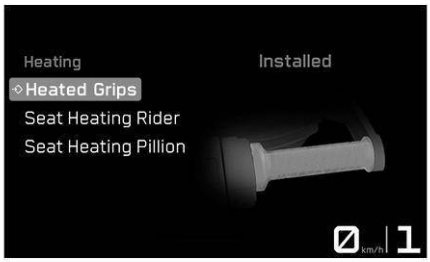

Condition: Model with grip heater, Motorcycle is stationary

- Press the **SET** button when the menu is closed.
- Press the **UP** or **DOWN** button until **Settings** is highlighted. Press the **SET** button to open the menu.
- Press the **UP** or **DOWN** button until **Heating** is highlighted. Press the **SET** button to open the submenu.
- Press the **UP** or **DOWN** button until **Heated Grips** is marked. Press the **SET** button to open the submenu.
- Activate the menu item using the **UP** or **DOWN** button.
- Press the **SET** button to switch the heated grip on or off.

7.28.52 Seat Heating Rider (function optional)

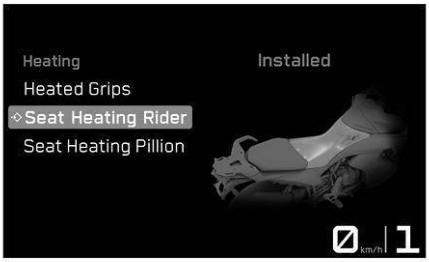

Condition: Model with seat heating, Motorcycle is stationary

- Press the **SET** button when the menu is closed.
- Press the **UP** or **DOWN** button until **Settings** is highlighted. Press the **SET** button to open the menu.
- Press the **UP** or **DOWN** button until **Heating** is highlighted. Press the **SET** button to open the submenu.
- Press the **UP** or **DOWN** button until **Seat Heating Rider** is marked. Press the **SET** button to open the submenu.
- Activate the menu item using the **UP** or **DOWN** button.
- Press the **SET** button to switch the front rider's seat heating on or off.

7.28.53 Seat Heating Pillion (function optional)

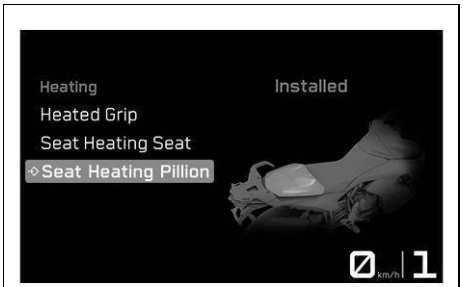

Condition: Model with seat heating, Motorcycle is stationary

- Press the **SET** button when the menu is closed.
- Press the **UP** or **DOWN** button until **Settings** is highlighted. Press the **SET** button to open the menu.
- Press the **UP** or **DOWN** button until **Heating** is highlighted. Press the **SET** button to open the submenu.
- Press the **UP** or **DOWN** button until **Seat Heating Pillion** is marked. Press the **SET** button to open the submenu.
- Activate the menu item using the **UP** or **DOWN** button.
- Press the **SET** button to switch the passenger seat heating on or off.

7.28.54 Extra Functions

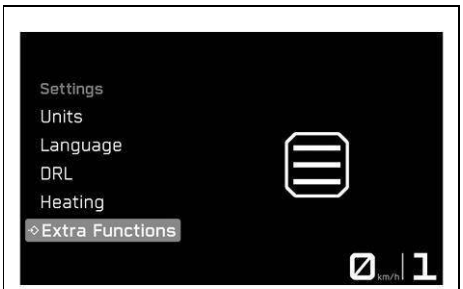

Condition: Motorcycle is stationary, Motorcycle with optional supplementary function

- Press the **SET** button when the menu is closed.
- Press the **UP** or **DOWN** button until **Settings** is highlighted.
- Press the **SET** button to open the menu.
- Press the **UP** or **DOWN** button until **Extra Functions** is highlighted. Press the **SET** button to open the submenu.
- Use the **UP** or **DOWN** button to navigate through the extra functions.

Note

The optional extra functions are listed.

The current **KTM PowerParts** and available software are listed on the KTM website.

7.28.55 Demo mode

Condition: Motorcycle is stationary, Motorcycle with demo mode

- Press the **SET** button when the menu is closed.
- Press the **UP** or **DOWN** button until **Settings** is highlighted.
- Press the **SET** button to open the menu.
- Press the **UP** or **DOWN** button until **Demo Mode** is highlighted. Press the **SET** button to open the submenu.
- Use the **UP** or **DOWN** button to navigate through the demo mode functions.

Note

The activated demo mode functions (p. 35) are listed.

After the demo mode expires, the optional software functions are available from authorized partners.

8.1 Handlebar position

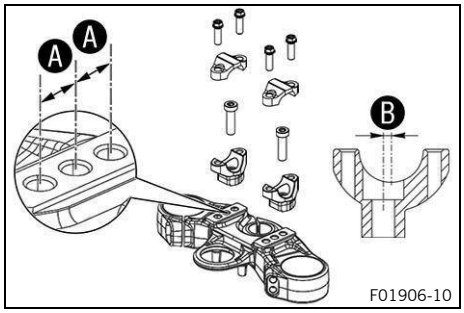

On the upper triple clamp, there are three holes at a distance of Ⓐ to each other.
The holes on the handlebar supports are placed at a distance of Ⓑ from the center.

Hole distance Ⓐ	15 mm (0.59 in)
Hole distance Ⓑ	3.5 mm (0.138 in)

The handlebar can be mounted in six different positions. This allows the handlebar to be mounted in the most comfortable position for the rider.

8.2 Adjusting the handlebar position

WARNING

Danger of accidents A repaired handlebar poses a safety risk.

If the handlebar is bent or straightened, the material becomes fatigued. The handlebar may break as a result.

– Change the handlebar if the handlebar is damaged or bent.

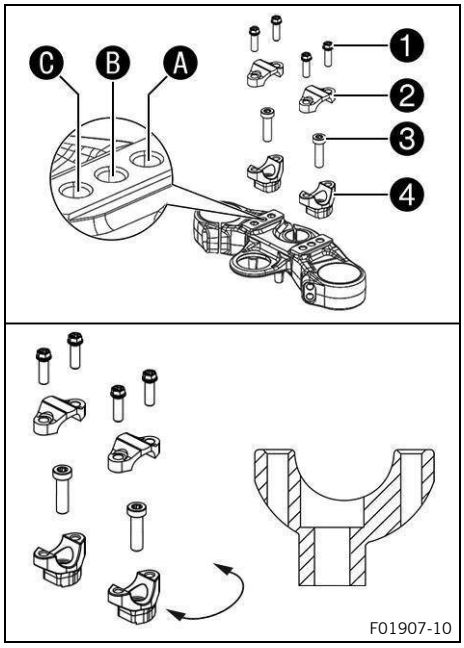

– Remove screws ❶. Take off the handlebar clamps ❷. Position the handlebar so that screws ❸ are accessible.

Protect the components against damage by covering them.
Do not kink the cables or lines.

– Remove screws ❸. Take off handlebar supports ❹.
– Move the handlebar supports into the desired position Ⓐ, Ⓑ or Ⓒ. Mount and tighten screws ❸.

Mount the left and right handlebar supports in the same position.

Screw, handlebar mount	
M10	45 Nm (33.2 ft·lb$_f$) **Loctite® 243**

– Position the handlebar.

Make sure the cables and wiring are positioned correctly.

– Position the handlebar clamps. Mount screws ❶ and tighten evenly.

Handlebar clamp screw	
M8	20 Nm (14.8 ft·lb$_f$)

8.3 Adjusting the basic position of the clutch lever

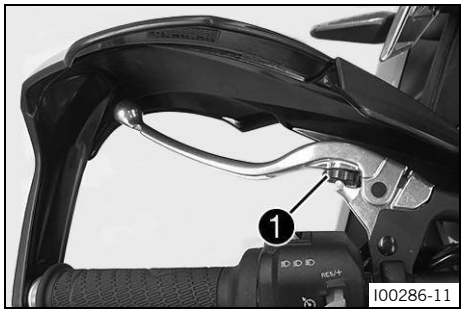

– Push clutch lever forward.
– Adjust the basic position of the clutch lever to your hand size by turning adjusting screw 1.

Only turn the adjusting screw by hand, and do not use force.
Do not make any adjustments while riding.

Note

When the adjusting screw is turned clockwise, the clutch lever moves closer to the handlebar.

When the adjusting screw is turned counterclockwise, the clutch lever moves away from the handlebar.

The range of adjustment is limited.

8.4 Adjusting the basic position of the hand brake lever

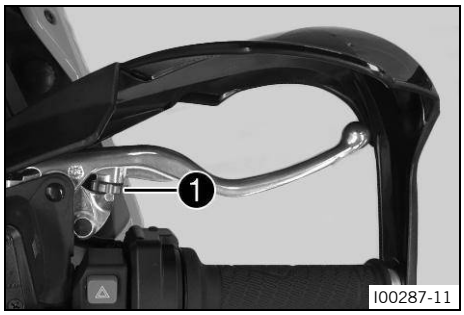

– Push hand brake lever forward.
– Adjust the basic position of the hand brake lever to your hand size by turning adjusting screw 1.

Only turn the adjusting screw by hand, and do not use force.
Do not make any adjustments while riding.

Note

Turn the adjusting screw clockwise to decrease the distance between the hand brake lever and the handlebar.

Turn the adjusting screw counterclockwise to increase the distance between the hand brake lever and the handlebar.

The range of adjustment is limited.

8.5 Adjusting foot brake lever stub

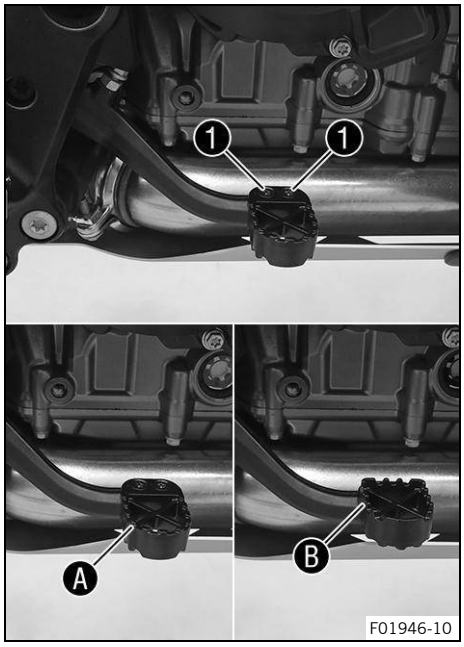

– Remove screws ❶ with the foot brake lever stub.
– Move the foot brake lever stub into desired position Ⓐ or Ⓑ. Mount and tighten screws ❶.

Screw, foot brake lever stub	
M5	10 Nm (7.4 ft·lb$_f$) **Loctite® 243**

8.6 Adjusting the basic position of the brake pedal

WARNING
Danger of accidents The brake system fails in the event of overheating.
If there is no free travel on the brake lever, pressure builds up in the brake system.
– Set the free travel on the brake lever as specified.

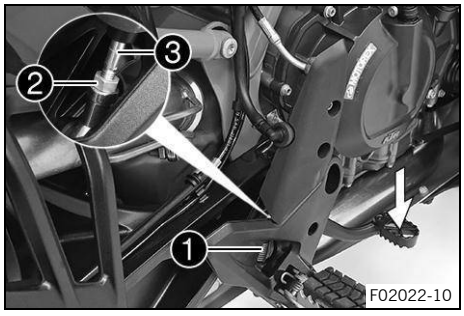

– Detach spring ❶.
– Loosen nut ❷.

Tip
Press the foot brake lever downwards to make this easier.

– Turn the push rod ❸ to set the basic position of the foot brake lever.

The screw must be screwed in by at least five full turns.

Note
The range of adjustment is limited.
Screwing the push rod into the ball joint adjusts the foot brake lever downwards.
Screwing the push rod out of the ball joint adjusts the brake lever upwards.

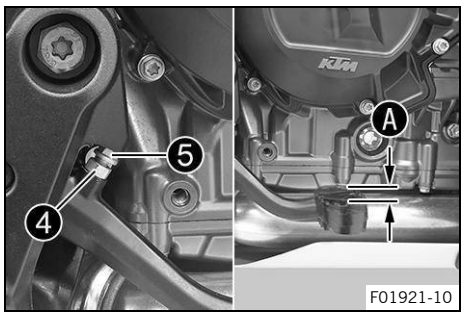

– Loosen nut ❹ and turn screw ❺ correspondingly until the free travel Ⓐ is present. If necessary, adjust the basic position of the brake pedal.

Free travel of brake pedal	3 mm … 5 mm (0.12 in … 0.20 in)

– Hold screw ❺ and tighten nut ❹.

Nut, foot brake lever adjustment	
M6	6 Nm (4.4 ft·lb$_f$)

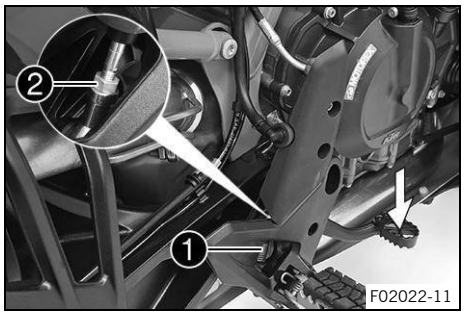

– Tighten nut ❷.

Nut, push rod, foot brake lever	
M6	6 Nm (4.4 ft·lb$_f$)

Tip
Press the foot brake lever downwards to make this easier.

– Attach spring ❶.

8.7 Checking the basic position of the gear shift lever

Note
When driving, the gear shift lever must not touch the rider's boot when in the basic position.
If the shift lever is permanently touching the boot, the transmission will be subject to excessive load; this can cause malfunctions on the QUICKSHIFTER+ (optional).

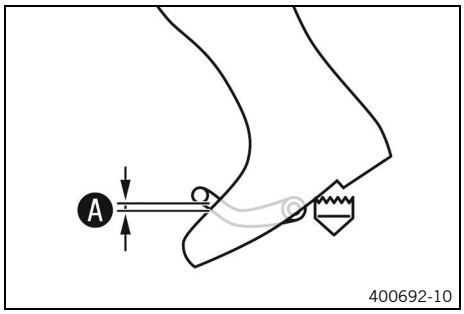

– Sit on the vehicle in the riding position and measure the distance Ⓐ between the upper edge of your boot and the shift lever.

Distance between the gear shift lever and upper edge of boot	10 mm … 20 mm (0.39 in … 0.79 in)

» If the distance does not meet the specifications:
  – Adjust the basic position of the gear shift lever. (p. 74)

8.8 Adjusting the basic position of the gear shift lever

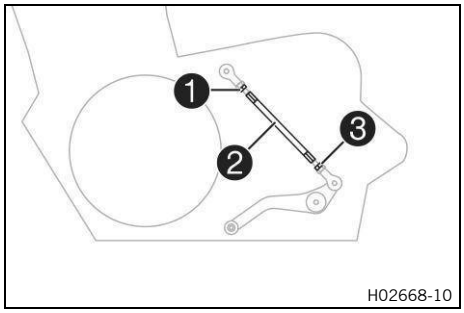

– Loosen nut ❶ while holding stud ❷.
– Loosen nut ❸ while holding stud ❷.

Note
Nut ❸ has an LH thread.

– Turn stud ❷ to adjust the shift lever.

The gear shift lever must not come into contact with any other vehicle components during the shift procedure.

Note
The range of adjustment is limited.

– Tighten nut ❸ while holding stud ❷.

Nut, shift rod	
M6LH	6 Nm (4.4 ft·lb_f)

– Tighten nut ❶ while holding stud ❷.

Nut, shift rod	
M6	6 Nm (4.4 ft·lb_f)

9.1 Notes on preparing for first use

DANGER

Danger of accidents A rider who is not fit to ride poses a danger to themself and to others.

– Do not operate the vehicle if you are not fit to ride due to alcohol, drugs, or medication.
– Do not operate the vehicle if you are physically or mentally incapable of doing so.

WARNING

Danger of accidents The brake system fails in the event of overheating.

If the brake pedal is not released, the brake pads grind continuously.

– Take your foot off the brake pedal when you are not braking.

WARNING

Danger of accidents Non-approved or non-recommended tyres and wheels impact the handling characteristic.

– Only use tires and wheels approved and recommended by the vehicle manufacturer with the corresponding speed rating.

WARNING

Danger of accidents New tires have reduced road grip.

The contact surface on new tires is not yet roughened.

– Run in new tires with moderate riding and only gradually increase the lean angle.

Run-in distance	200 km (124.3 mi)

WARNING

Danger of accidents Different tire profiles on the front and rear wheels can make it more difficult to control the vehicle.

– Make sure that only tires of the same tread type are mounted to the front and rear wheel.

WARNING

Risk of injury Missing or inadequate protective clothing increases the risk of injury.

– Wear appropriate protective clothing such as helmet, boots, gloves as well as pants and a jacket with protectors on all rides.
– Always wear protective clothing that is in good condition and meets the legal regulations.

Note

When using the vehicle, remember that others may feel disturbed by excessive noise.

– Ensure that the pre–delivery inspection has been carried out by an authorized contractual partner.
  ✓ The delivery certificate is transferred upon vehicle handover.
– Read the entire owner's manual before riding for the first time.
– Get to know the controls.
– Adjust the basic position of the clutch lever. (p. 72)
– Adjust the basic position of the hand brake lever. (p. 72)
– Adjust the basic position of the brake pedal. (p. 73)
– Get used to the handling characteristics of the motorcycle on suitable terrain before undertaking a more challenging ride.
– Also, ride as slowly as possible and in a standing position to get a better feel for the motorcycle.
– Hold the handlebar firmly with both hands and keep your feet on the footpegs when riding.
– Run in the engine. (p. 77)

9.2 Running in the engine

– During the running-in phase, do not exceed the specified engine speed.

Maximum engine speed	
During the first: 1,000 km (621.4 mi)	6,500 rpm (108.33 Hz)
After the first: 1,000 km (621.4 mi)	9,800 rpm (163.33 Hz)

Avoid fully opening the throttle.

Note
If the maximum engine speed is exceeded before the first service, the shift warning light flashes.

9.3 Loading the vehicle

WARNING
Fire hazard The hot exhaust system may burn luggage.
– Fasten your luggage in such a way that it cannot be burned or singed by the hot exhaust system.

WARNING
Danger of accidents A high payload alters the handling characteristic and increases the stopping distance.
– Adapt your speed to your payload.

WARNING
Danger of accidents Carrying luggage alters handling characteristics.
– Adapt your speed to your payload.
– Ride more slowly if your vehicle is loaded with cases or other luggage.

Maximum speed with luggage	150 km/h (93.2 mph)

WARNING
Danger of accidents Items of luggage that have slipped or are incorrectly fastened can obscure the lighting system.
– Check that your luggage is fixed properly at regular intervals.
– Make sure that the lighting system is not covered by luggage.

WARNING
Danger of accidents Total weight and axle loads influence the handling characteristic.
The total weight consists of: operational vehicle with a full tank, rider and, if applicable, a passenger with protective clothing and helmet, and, if applicable, mounted luggage.
– Do not exceed the maximum permissible total weight or the axle loads.

WARNING
Danger of accidents Improper mounting of cases, tank rucksacks or other luggage impairs the handling characteristics.
Luggage mounted incorrectly can slip while the vehicle is in motion.
– Mount and secure all luggage according to the manufacturer's instructions.
– Check that your luggage is fixed properly at regular intervals.

WARNING

Danger of accidents The luggage system will be damaged if it is overloaded.

– Read the manufacturer information on maximum payload when mounting cases.

– If luggage is carried, ensure it is fixed firmly as close as possible to the center of the vehicle and ensure even weight distribution between the front and rear wheels.

The maximum permissible total weight and the maximum permissible axle loads must not be exceeded.	
Maximum permissible total weight	450 kg (992.1 lb)
Maximum permissible front axle load	175 kg (385.8 lb)
Maximum permissible rear axle load	275 kg (606.3 lb)

9.4 Preparing the vehicle for difficult operating conditions

Note

Use of the vehicle under difficult conditions, such as on sand, dust or on wet and muddy roads/terrain, can result in significantly increased wear of components, such as the powertrain, brake system, or suspension components. For this reason, it may be necessary to inspect or replace parts before the next scheduled service interval.

Note

In dusty conditions, it may be necessary to check and replace the air filter more frequently, possibly even daily.

– Check the electrical socket connector for humidity and corrosion and to ensure it is firmly seated.
  » If moisture, corrosion, or damage is found:
    – Clean and dry the socket connector, or change it if necessary.

Difficult operating conditions are:

– Sand.
– Dust
– Wet or muddy roads
– Temperatures above +40 °C
– Temperatures below -10 °C

10.1 checks and maintenance measures when preparing for use

Note
Before every trip, check the condition of the vehicle and ensure that it is roadworthy.
The vehicle must be in perfect technical condition when it is being operated.

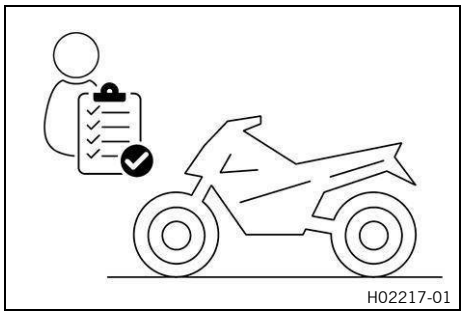

- Check the engine oil level. (p. 153)
- Check the brake fluid level for the front brake. (p. 121)
- Check the brake fluid level for the rear brake. (p. 124)
- Check that the brake pads of the front brake are secured. (p. 123)
- Check that the brake pads of the rear brake are secured. (p. 125)
- Check that the brake system is functioning properly.
- Check the coolant level in the compensating tank. (p. 148)
- Check the chain for dirt. (p. 99)
- Check the chain tension. (p. 100)
- Check the tire condition. (p. 133)
- Check the tire pressure. (p. 134)
- Check the settings of all controls and ensure that they can be operated smoothly.
- Check that the electrical equipment is functioning properly.
- Check that luggage is properly secured.
- Sit on the motorcycle and check the rear mirror setting.
- Check the fuel level.
- In dusty operating conditions: Check the air filter box and air filter.

10.2 Starting the vehicle

DANGER
Danger of poisoning Exhaust gases are toxic and inhaling them may result in unconsciousness and death.
- Always ensure that there is sufficient ventilation when running the engine.
- Use suitable exhaust extraction when starting or running the engine in an enclosed space.

WARNING
Danger of accidents Electronic components and safety devices will be damaged if the 12-V battery is discharged or missing.
If the 12-V battery is discharged or defective, malfunctions in the vehicle electronics can occur, especially when starting.
- Never operate the vehicle with a discharged 12-V battery or without a 12-V battery.

NOTE
Engine failure Running a cold engine at high engine speeds negatively impacts the service life of the engine.
- Always warm up the engine at low engine speeds.

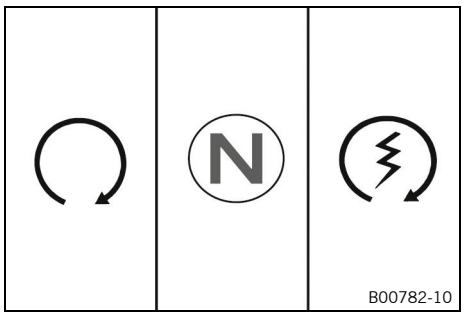

– Take the motorcycle off the side stand and sit on the motorcycle.
– Make sure that the start button/kill switch is in the middle position ◯.
– Switch on the ignition by turning the ignition key to position ◯.

To avoid malfunctions in the control unit communication, do not switch the ignition off and on in rapid succession.

✓ After you switch on the ignition, you can hear the fuel pump working for about two seconds. The function check of the combination instrument is run at the same time.
✓ The ABS warning light lights up and goes out again after starting off.

– Shift the transmission into Leerlaufstellung N.
✓ The green idle indicator lamp **N** lights up.
– Briefly press the start button/kill switch into lower position ⚡.

Do not press the start button until the combination instrument function check has finished.
Do not open the throttle to start.
If the starting attempt is unsuccessful, wait for 15 seconds before making another attempt at starting.
After 6 unsuccessful starting attempts, do not try again, and check the vehicle for other malfunctions instead.

Note
This motorcycle is equipped with a safety starting system.
You can only start the engine if the transmission is in neutral or if the clutch lever is pulled when a gear is engaged.
If the side stand is folded out and you shift into gear and release the clutch lever, the engine stops.

10.3 Starting off

– Pull the clutch lever, shift into first gear, release the clutch lever slowly and at the same time carefully open the throttle.

10.4 Quickshifter+ (optional)

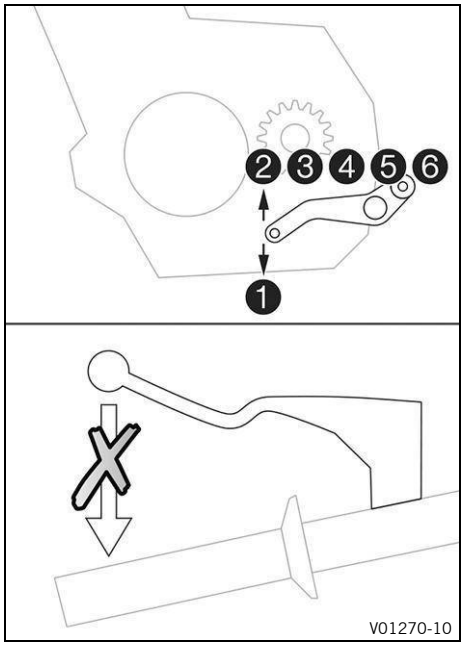

If the **QUICKSHIFTER+** is activated, you can shift up and down without actuating the clutch.

Because there is no need to close the throttle grip, uninterrupted gear shifts are possible.

The QUICKSHIFTER+ uses the shift shaft position to check whether or not a shift should be initiated, and sends a corresponding signal to the engine control unit.

If the QUICKSHIFTER+ is disabled in the combination instrument, the clutch needs to be actuated in the normal way for each shift.

10.5 Shifting, riding

WARNING

Risk of injury The passenger may fall from the vehicle if they act incorrectly.

– Ensure that the passenger sits correctly on the passenger seat, places his or her feet on the passenger foot pegs and holds on to the rider or the grab handles.

WARNING

Danger of accidents Not adapting the riding style constitutes a major risk.

– Comply with traffic regulations and ride defensively and with foresight to detect sources of danger as early as possible.

WARNING

Danger of accidents Total weight and axle loads influence the handling characteristic.

The total weight consists of: operational vehicle with a full tank, rider and, if applicable, a passenger with protective clothing and helmet, and, if applicable, mounted luggage.

– Do not exceed the maximum permissible total weight or the axle loads.

WARNING

Danger of accidents Improper mounting of cases, tank rucksacks or other luggage impairs the handling characteristics.

Luggage mounted incorrectly can slip while the vehicle is in motion.

– Mount and secure all luggage according to the manufacturer's instructions.
– Check that your luggage is fixed properly at regular intervals.

WARNING

Danger of accidents Adjustments to the vehicle distract attention from traffic activity.

– Make all adjustments when the vehicle is at a standstill.

WARNING
Danger of accidents Abrupt load alterations can cause the vehicle to become out of control.
– Avoid abrupt load alterations and sudden braking actions unless a hazardous situation arises.

WARNING
Danger of accidents Cold tires have reduced road grip.
– Ride the first miles carefully on every journey at moderate speed until the tires reach operating temperature.

WARNING
Danger of accidents New tires have reduced road grip.
The contact surface on new tires is not yet roughened.
– Run in new tires with moderate riding and only gradually increase the lean angle.

Run-in distance	200 km (124.3 mi)

WARNING
Danger of accidents A fall can damage the vehicle more seriously than it may first appear.
– Check the vehicle after a fall as you do when preparing for use.

WARNING
Danger of accidents An incorrect ignition key position causes malfunctions.
– Do not change the ignition key position while riding.

WARNING
Danger of accidents If you downshift at high engine speed, the rear wheel blocks and the engine races.
– Do not downshift to a lower gear at high engine speeds.

NOTE
Engine failure Overheating damages the engine.
– If the coolant temperature warning is displayed, stop immediately and take care not to endanger yourself or other traffic participants in the process.
– Allow the engine and cooling system to cool down.
– Check and, if necessary, correct the coolant level on the cooling system while it is in a cooled state.

NOTE
Engine failure Unfiltered intake air has a negative effect on the service life of the engine.
Dust and dirt can enter the engine if there is no air filter or if the air filter is mounted incorrectly.
– Only operate the vehicle if an air filter is correctly fitted.

NOTE
Transmission damage Incorrect use of the QUICKSHIFTER+ will damage the transmission.
The QUICKSHIFTER+ can only be used if the function is enabled in the combination instrument.
The QUICKSHIFTER+ is not active if you pull the clutch lever.
– Only use the QUICKSHIFTER+ in the permitted speed range shown.

Note
If you hear unusual noises while riding, stop immediately in a safe manner, switch off the engine, and contact an authorized contractual partner.

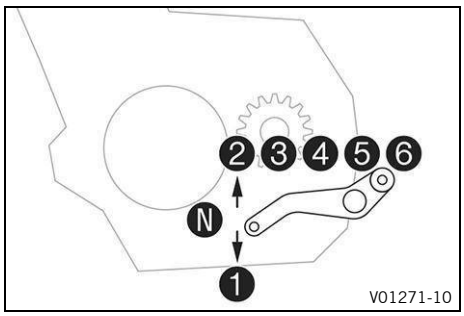

- Shift into a higher gear when conditions allow (incline, road situation, etc.).
- Release the throttle while simultaneously pulling the clutch lever, shift into the next gear, release the clutch lever, and open the throttle.

Note
You can see the positions of the 6 forward gears in the figure. The neutral or idle position is between the first and second gears. First gear is used for starting off or for steep inclines.
The operating temperature is reached when 5 bars of the temperature display light up.

- After reaching maximum speed by fully opening the throttle twist grip, turn the throttle back so that it is ¾ open. This will reduce the speed slightly, but the fuel consumption will be considerably lower.
- Only accelerate as much as the road and weather conditions allow. In particular, you should not change gear on bends and should only accelerate very cautiously.
- Brake if necessary and close the throttle at the same time in order to shift down.
- Pull clutch lever and shift into a lower gear, release the clutch lever slowly, and open the throttle or shift again.
- If the engine stalls (e.g., at a crossroads), just pull clutch lever and press the start button/emergency OFF switch into the lower position. The transmission must not be shifted into neutral.
- Switch off the engine if you are likely to be running at idle speed or stationary for a long time.
- If the oil pressure warning lamp lights up during a trip, stop immediately and switch off the engine. Contact an authorized contractual partner.
- If malfunction indicator lamp lights up during a trip, please contact an authorized contractual partner as soon as possible.
- If the general warning lamp lights up during a trip, the display shows a message.

Note
Very important messages are stored in the **Warning** menu.

- If the ice warning appears in the combination instrument, the roads may be icy. Adjust your speed to the road conditions.

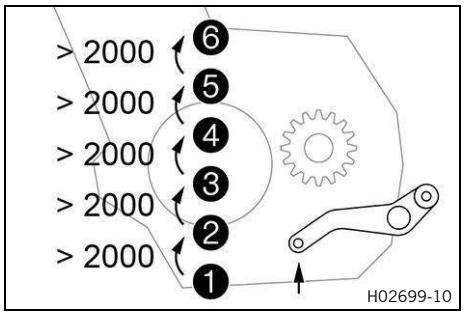

- If the **QUICKSHIFTER+** (optional) is activated in the dashboard, you can shift up in the rev range shown without pulling the clutch lever.

Note
The minimum engine speed in rpm before shifting up is shown in the figure.
Pull the shift lever to the stop quickly without changing the throttle twist grip position.

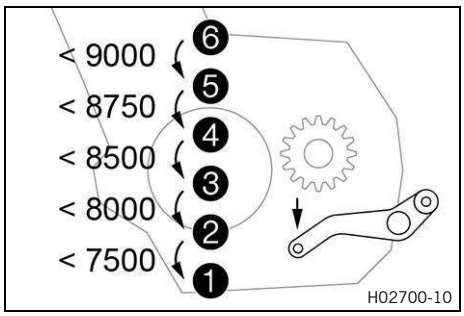

– If the **QUICKSHIFTER+** (optional) is activated in the dashboard, you can shift down in the rev range shown without pulling the clutch lever.

Note
The maximum engine speed in rpm before shifting down is shown in the figure.
Press the shift lever to the stop quickly without changing the throttle twist grip position.

10.6 MSR (optional)

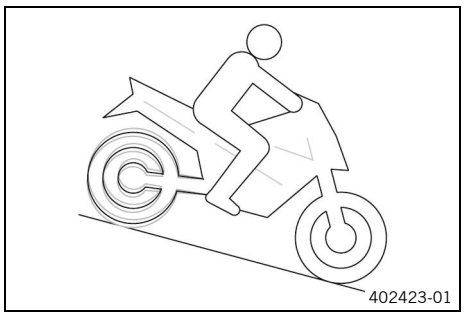

The **MSR** is an optional auxiliary function of the engine control.
If the engine braking effect is too great, the **MSR** prevents the rear wheel from locking or sliding away on a sloping position.
To avoid slip of the rear wheel, the **MSR** only opens the throttle valve as far as absolutely necessary.
The **MSR** is applied on surfaces, where the friction coefficient is to low to open the slipper clutch.
To further increase ride safety, the **MSR** is slope dependent.

Note
When ABS mode **Offroad** is active, the **MSR** is not active.

10.7 Braking

WARNING
Danger of accidents A spongy pressure point on the front or rear brake reduces the brake action.
– Do not drive the vehicle if the brake system has a spongy pressure point.

WARNING
Danger of accidents The brake system fails in the event of overheating.
If the brake pedal is not released, the brake pads grind continuously.
– Take your foot off the brake pedal when you are not braking.

WARNING
Danger of accidents Braking with excessive force locks the wheels.
The ABS effectiveness is only ensured if it is switched on.
– Leave the ABS switched on in order to benefit from the protective effect.

WARNING
Danger of accidents Moisture and dirt impair the brake system.
– Brake carefully several times to dry out and remove dirt from the brake pads and the brake discs.

WARNING
Danger of accidents The rear wheel can lock due to the engine braking effect.
– Pull the clutch when performing emergency braking or braking on slippery surfaces.

WARNING
Danger of accidents Salt on the roads impairs the brake system.
– Brake carefully several times to remove salt from the brake linings and the brake discs.

WARNING
Danger of accidents ABS may increase the stopping distance in certain situations.
– Adapt your braking to the riding situation and the road conditions.

WARNING
Danger of accidents Higher total weight increases the stopping distance.
– Take the longer stopping distance into account when carrying a passenger or luggage with you.

WARNING
Danger of accidents Driving aids can reduce the probability of a fall only within physical limits.
It is not always possible to compensate for certain riding situations, for example with luggage loaded with a high center of gravity, varying road surfaces, steep descents or full braking without disengaging the gear.
– Adapt your riding style to the road conditions and your driving ability.

– When braking, release the throttle and apply the front and rear brakes at the same time.

Note
When the **ABS** is enabled, maximum braking power can be applied even on surfaces with low road grip such as sandy, wet, or slippery terrain without the danger of the wheels locking.

WARNING
Danger of accidents Banked or laterally sloping ground reduces the maximum possible delay.
– If possible finish braking before going into a bend.

– Always finish braking before you go into a bend. Shift into a lower gear that suits the speed.
– Use the brake action of the engine on long downhill stretches. To do so, shift back one or two gears, but do not overrev the engine. This means that significantly less braking is required and means the brake system does not overheat.

10.8 Stop, park

WARNING
Risk of injury People who act without authorization endanger themselves and others.
– Never leave the vehicle unattended while the engine is running.
– Lock the steering and remove the ignition key if you leave the vehicle unattended.

WARNING
Danger of burns Some vehicle components become hot when the vehicle is operated.
– Do not touch any parts such as the exhaust system, radiator, engine, damper, or brake system before the vehicle parts have cooled down.
– Allow the vehicle parts to cool down before performing any work on the vehicle.

NOTE
Fire hazard Hot vehicle components pose a fire hazard and explosion risk.
– Do not park the vehicle near materials which are highly flammable or explosive.
– Allow the vehicle to cool down before covering it.

NOTE

Material damage The vehicle may be damaged if parked incorrectly.

Damage can occur if the vehicle rolls away or falls over.

The components for parking the vehicle are designed only for the weight of the vehicle.

- Park the vehicle on a firm and level surface.
- Make sure that nobody sits on the vehicle when it is parked on a stand.

- Brake the motorcycle.
- Shift the transmission into Leerlaufstellung N.
- Switch off the ignition by turning the ignition key to position ⊗.

Note

If the engine is switched off with the emergency OFF switch and the ignition remains switched on at the ignition lock, power continues to flow to most electrical power consumers. This discharges the 12-V battery. You should therefore always switch off the engine with the ignition lock – the kill switch is intended for emergencies only.

- Park the motorcycle on a firm surface.
- Swing side stand forward with your foot as far as it will go and lean the vehicle on it.
- Lock the steering by turning the handlebar to the left, pressing down the ignition key to position ⊗ and turning it to position 🔒. To make the steering lock engage more easily, move the handlebar a little to the left and right. Remove the ignition key.

10.9 Transportation

NOTE

Fire hazard Hot vehicle components pose a fire hazard and explosion risk.

- Do not park the vehicle near materials which are highly flammable or explosive.
- Allow the vehicle to cool down before covering it.

NOTE

Material damage The vehicle may be damaged if parked incorrectly.

Damage can occur if the vehicle rolls away or falls over.

The components for parking the vehicle are designed only for the weight of the vehicle.

- Park the vehicle on a firm and level surface.
- Make sure that nobody sits on the vehicle when it is parked on a stand.

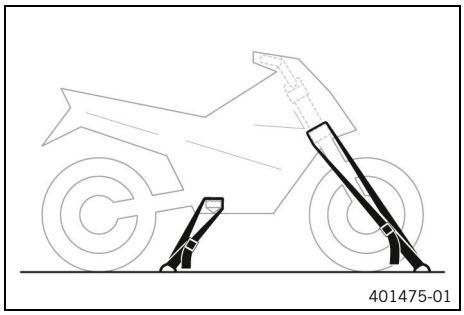

- Switch off the engine.
- Use tension belts or other suitable devices to secure the motorcycle against falling over or rolling away.

10.10 Towing in the event of a breakdown

NOTE

Danger of damage Damage to the powertrain and transmission can occur when towing with a towing vehicle.

- Do not use towing equipment where the wheels of the broken down vehicle remain on the road and rotate as it is towed.
- Always transport a broken down vehicle on a trailer or on the loading area of a transport vehicle.

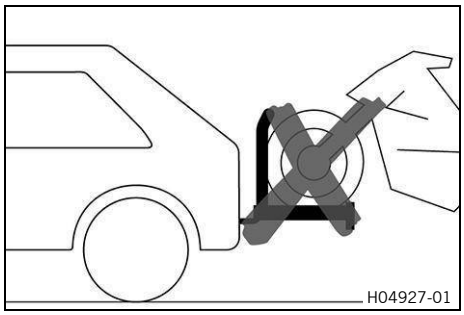

- Ensure that the broken down vehicle is properly secured on the trailer or transport vehicle.
- Observe local regulations for the recovery of broken down vehicles.

10.11 Refueling

DANGER

Fire hazard Fuel is highly flammable.

The fuel in the fuel tank expands when warm and can escape if overfilled.

- Do not refuel the vehicle in the vicinity of open flames, glowing, or smoldering objects.
- Make sure that nobody smokes in the vicinity of the vehicle during the refueling process.
- Switch off the engine for refueling.
- Make sure that no fuel is spilled; particularly not on hot parts of the vehicle.
- If any fuel is spilled, wipe it up immediately.
- Do not overfill the fuel tank.

WARNING

Danger of poisoning Fuel is harmful to health.

- Do not allow fuel to come into contact with skin, eyes, or clothing.
- Consult a doctor immediately if fuel has been ingested.
- Do not inhale fuel vapors.
- Rinse the affected area immediately with plenty of water in the event of contact with skin.
- Rinse eyes thoroughly with water and consult a doctor immediately if fuel comes into contact with eyes.
- If fuel spills on to your clothing, change the clothing.
- Store fuel properly in a suitable container and keep out of the reach of children.

NOTE

Material damage Inadequate fuel quality can lead to losses in performance and consequential damage.

- Refuel only with clean fuel that meets the specified standards.

NOTE

Environmental hazard Improper handling of fuel is dangerous to the environment.

- Do not allow fuel to enter the groundwater, the soil, or the sewage system.

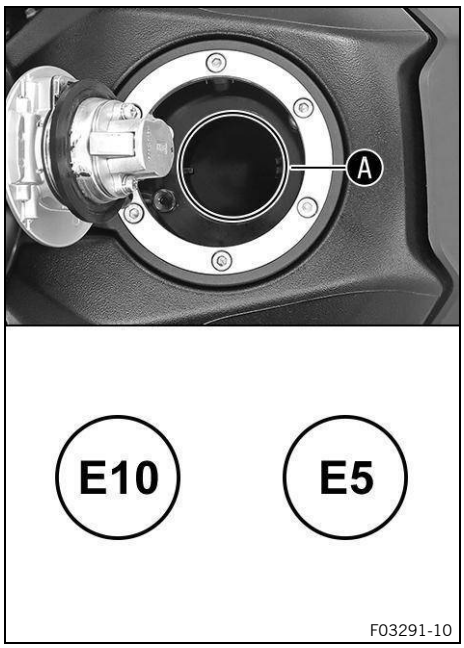

– Switch off the engine.
– Open the fuel tank cap. (p. 26)
– Fill the fuel tank with fuel up to the lower edge A of the filler neck.

Total fuel tank capacity, approx.	
Super unleaded (ROZ 95) (p. 184)	19.5 l (5.15 liq. gal_{US})

– Close the fuel tank cap. (p. 27)

11.1 Service work

Any further work that results from the service work must be ordered separately and invoiced separately.
Different service intervals may apply in your country, depending on the local operating conditions.
Individual service intervals and scopes may change in the course of technical developments. The most up-to-date service schedule is available for authorized contractual partners for the electronic proof of service. Your authorized contractual partner will be happy to advise you.
* In dusty operating conditions: Check the air filter regularly and replace if necessary.

	after 1,000 km (621.4 mi)	every 15,000 km (9,320.6 mi)	every 30,000 km (18,641.1 mi)	Every 12 months	Every 24 months	Every 48 months
Read out the fault memory using the diagnostics tool.	○	●	●	●	●	●
Program the shift shaft sensor.	○	●	●	●	●	●
Check that the electrical equipment is functioning properly.	○	●	●	●	●	●
Check that the brake pads of the front brake are secured. (p. 123)	○	●	●	●	●	●
Check that the brake pads of the rear brake are secured. (p. 125)	○	●	●	●	●	●
Check the brake discs. (p. 120)	○	●	●	●	●	●
Check the brake lines for damage and tightness.	○	●	●	●	●	●
Check the brake fluid level for the front brake. (p. 121)	○	●	●	●		
Change the brake fluid for the front brake.					●	●
Check the brake fluid level for the rear brake. (p. 124)	○	●	●	●		
Change the brake fluid for the rear brake.					●	●
Check the free travel of the clutch lever. (p. 156)	○	●	●	●	●	●
Check the free travel of the brake pedal. (p. 123)	○	●	●	●	●	●
Change the engine oil and the oil filter, clean the oil screens. (p. 153)	○	●	●	●	●	●
Check all hoses (e.g. fuel, cooling, bleeder, drainage, etc.) and boots for cracking, leaks, and correct routing.		●	●	●	●	●
Empty the drainage hoses.	○	●	●	●	●	●
Check the cables for damage and that there are no kinks in the routing.		●	●	●	●	●
Check the frame.			●			
Check the swingarm.			●			
Check the swingarm bearing for play.		●	●			
Check the steering head bearing play.	○	●	●			
Check the wheel bearing for play.		●	●			
Check the shock absorber and fork for leaks. Perform a fork service and shock absorber service as needed, when possible and depending on how the vehicle is used.	○	●	●	●	●	●
Check the tire condition. (p. 133)	○	●	●	●	●	●
Check the tire pressure. (p. 134)	○	●	●	●	●	●
Check the rim run-out.	○	●	●	●	●	●

	after 1,000 km (621.4 mi)	every 15,000 km (9,320.6 mi)	every 30,000 km (18,641.1 mi)	Every 12 months	Every 24 months	Every 48 months
Retighten the spokes.	○					
Check the spoke tension. (p. 135)		●	●	●	●	●
Check the chain, rear sprocket, engine sprocket, and chain guide. (p. 102)		●	●	●	●	●
Check the chain tension. (p. 100)	○	●	●	●	●	●
Grease all moving parts (e.g. side stand, hand lever, chain, etc.) and check for smooth operation.	○	●	●	●	●	●
Change the spark plugs.			●			
Check the valve clearance.			●			
Change the air filter, clean the air filter box. *		●	●			
Check the fuel pressure.		●	●	●	●	●
Check the headlight setting. (p. 146)	○	●	●			
Check the tightness of the safety-relevant screws and nuts which are easily accessible.	○	●	●	●	●	●
Clean the dust boots of the fork legs. (p. 113)		●	●			
Check the coolant fill level and antifreeze.	○	●	●	●	●	
Change the coolant.						●
Check that the radiator fan is functioning properly.	○	●	●	●	●	●
Final check: Check the vehicle is roadworthy and take a test ride.	○	●	●	●	●	●
Read out the fault memory after the test ride using the diagnostics tool.	○	●	●	●	●	●
Set the service interval display.	○	●	●	●	●	●
Enter the electronic proof of service in the contractual partner portal.	○	●	●	●	●	●

○ One-time interval
● Periodic interval

12.1 Fork/shock absorber

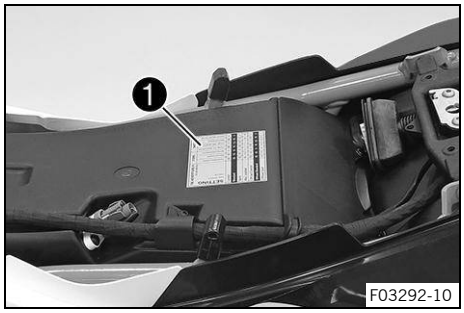

The fork and the shock absorber offer many options of adapting the chassis to the riding style and payload.

Note
The recommendations for the suspension setting are shown in table ❶. The table is located under the seat on the air filter box.

These adjustments are guidelines and should always be the basis for a suspension setting. If the guidelines are not adhered to, the riding characteristics could deteriorate, particularly at high speeds.

12.2 Adjusting the compression damping of the fork

Note
The hydraulic compression damping determines the fork suspension behavior.

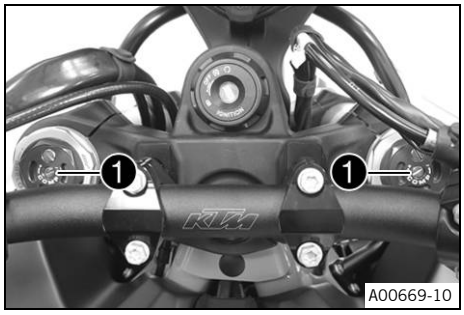

– Turn adjusters ❶ clockwise all the way to the stop.

Note
Adjusters ❶ **COMP** are located at the top end of the fork legs.
Make the same adjustment on both fork legs.

– Turn counterclockwise by the number of clicks corresponding to the fork type.

Compression damping	
Comfort	20 clicks
Standard	16 clicks
Sport	12 clicks
Full payload	8 clicks

Note
Turning clockwise increases damping; turning counterclockwise reduces damping during compression.

12.3 Adjusting the rebound damping of the fork

Note
The hydraulic rebound damping determines the fork suspension behavior.

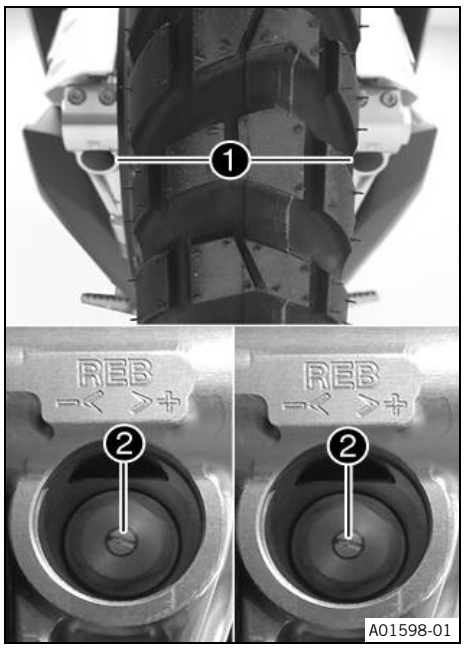

– Take off protection caps ❶.
– Turn adjusters ❷ clockwise all the way to the stop.

Note
Adjusters ❷ **REB** are located at the bottom end of the fork legs.
Make the same adjustment on both fork legs.

– Turn counterclockwise by the number of clicks corresponding to the fork type.

Rebound damping	
Comfort	18 clicks
Standard	18 clicks
Sport	18 clicks
Full payload	18 clicks

Note
Turning clockwise increases damping; turning anticlockwise reduces damping on rebound.

– Fit protection caps ❶.

12.4 Adjusting the spring preload of the fork

Preparatory work

– Raise the motorcycle with the rear lifting gear. (p. 97)
– Remove the front top fender. (p. 112)
– Lift the motorcycle with the front lifting gear. (p. 97)

Main work

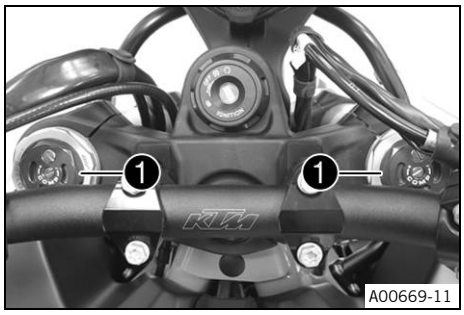

– Turn adjusters ❶ counterclockwise all the way.

Make the same adjustment on both fork legs.

– Turn the adjusting screws clockwise.

Spring preload – preload adjuster	
Comfort	8 clicks
Standard	10 clicks
Sport	10 clicks
Payload	16 clicks

Note
Turn clockwise to increase the spring preload; turn counterclockwise to reduce the spring preload.
Adjusting the spring preload has no influence on the absorption setting of the rebound.
Basically, however, you should set the rebound damping higher with a higher spring preload.

Reworking

– Take the motorcycle off the front lifting gear. (p. 98)
– Install the front top fender. (p. 112)
– Remove the rear of the motorcycle from the lifting gear. (p. 97)

12.5 Bleeding the fork legs

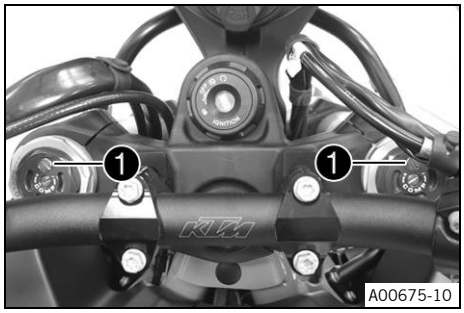

Main work

– Loosen bleeder screw 1.
  ✓ Any excess pressure escapes from the inner fork.
– Tighten the bleeder screw.

Carry out this operation on both fork legs.

12.6 Compression damping of the shock absorber

The compression damping of the shock absorber is divided into two ranges: high-speed and low-speed.

High-speed and low-speed refer to the compression speed of the rear wheel suspension and not to the vehicle speed.

The high-speed compression adjuster, for example, has an effect when riding over an asphalt edge: the rear wheel suspension compresses quickly.

The low-speed compression has an effect, for example, when riding over long bumps: the rear wheel suspension compresses slowly.

These two ranges can be adjusted separately, although the transition between high-speed and low-speed is gradual. As a result, changes in the high-speed range affect the compression damping in the low-speed range and vice versa.

12.7 Adjusting the low-speed compression damping of the shock absorber

CAUTION

Risk of injury Parts of the shock absorber will move erratically if the shock absorber is detached incorrectly. The shock absorber is filled with highly compressed nitrogen.

– Please follow the description provided.

Note

The effect of the low-speed compression adjustment can be seen in slow to normal compression of the shock absorber.

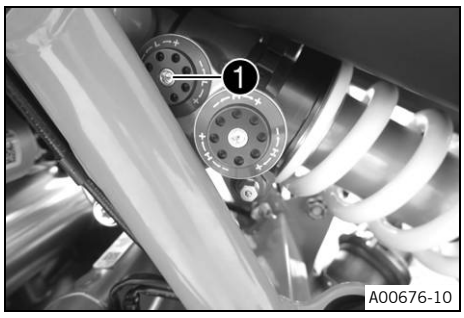

– Turn adjusting screw ❶ clockwise up to the last perceptible click.
– Turn counterclockwise by the number of clicks corresponding to the shock absorber type.

Low-speed compression damping	
Comfort	16 clicks
Standard	12 clicks
Sport	10 clicks
Full payload	10 clicks

Note
Turning clockwise increases damping; turning anticlockwise reduces damping.

12.8 Adjusting the high-speed compression damping of the shock absorber

CAUTION
Risk of injury Parts of the shock absorber will move erratically if the shock absorber is detached incorrectly. The shock absorber is filled with highly compressed nitrogen.
– Please follow the description provided.

Note
The effect of the high-speed compression adjustment can be seen in the fast compression of the shock absorber.

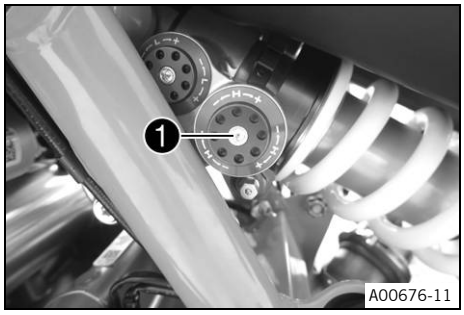

– Turn adjusting screw ❶ all the way clockwise with a socket wrench.
– Turn counterclockwise by the number of turns corresponding to the shock absorber type.

High-speed compression damping	
Comfort	40 clicks
Standard	40 clicks
Sport	40 clicks
Full payload	40 clicks

Note
Turning clockwise increases damping; turning anticlockwise reduces damping.

12.9 Adjusting the rebound damping of the shock absorber

CAUTION

Risk of injury Parts of the shock absorber will move erratically if the shock absorber is detached incorrectly. The shock absorber is filled with highly compressed nitrogen.

– Please follow the description provided.

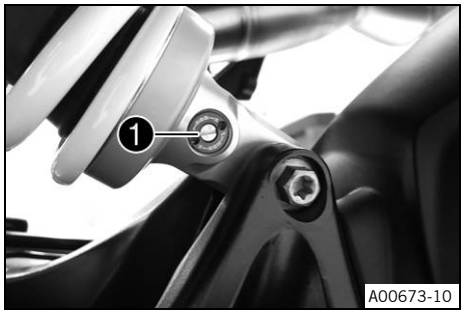

– Turn adjusting screw 1 clockwise up to the last perceptible click.
– Turn counterclockwise by the number of clicks corresponding to the shock absorber type.

Rebound damping	
Comfort	18 clicks
Standard	15 clicks
Sport	15 clicks
Full payload	15 clicks

Note

Turning clockwise increases damping; turning anticlockwise reduces damping on rebound.

12.10 Adjusting the spring preload of the shock absorber

WARNING

Danger of accidents Modifications to the suspension settings that are not properly coordinated can impair the handling and overload components.

– Only make adjustments within the recommended range.
– Ride slowly to start with after making adjustments to get the feel of the new handling characteristics.

Note

The spring preload defines the initial status of the spring operation on the shock absorber.

The best spring preload setting is achieved when it is set for the weight of the rider and that of any luggage and a passenger, thus ensuring an ideal compromise between handling and stability.

Condition: The swingarm is relieved of weight

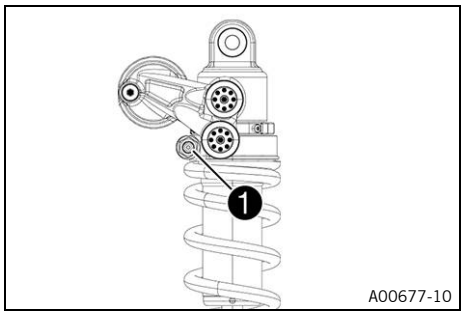

– Turn adjusting screw 1 counterclockwise all the way.

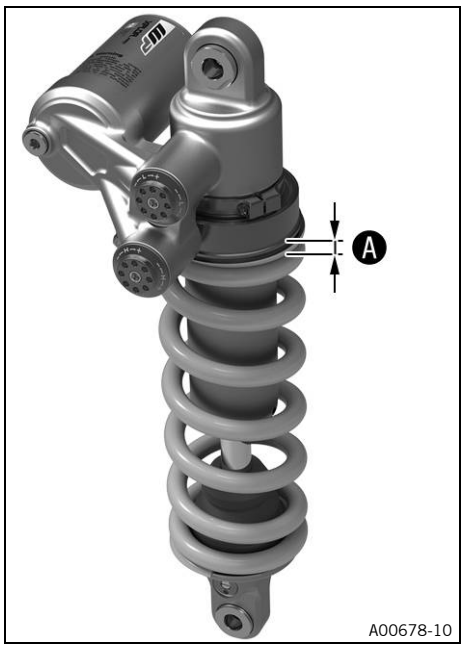

– Tighten the spring to specified dimension ❶ by turning screw Ⓐ.

Preload	
Comfort	8 mm (0.31 in)
Standard	8 mm (0.31 in)
Sport	8 mm (0.31 in)
Full payload	12 mm (0.47 in)

Note
Turn clockwise to increase the spring preload; turn counterclockwise to reduce the spring preload.

13.1 Raising the motorcycle with rear lifting gear

NOTE

Material damage The vehicle may be damaged if parked incorrectly.
Damage can occur if the vehicle rolls away or falls over.
The components for parking the vehicle are designed only for the weight of the vehicle.
– Park the vehicle on a firm and level surface.
– Make sure that nobody sits on the vehicle when it is parked on a stand.

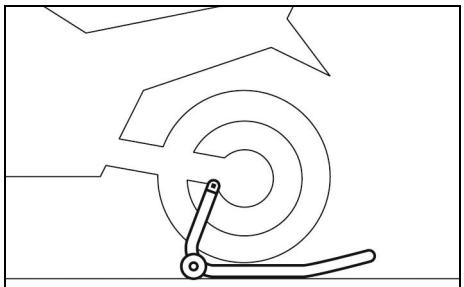

– Mount retaining adapter on the link fork.
– Insert the adapter in the rear lifting gear.

Retaining adapter (61029955144)
Rear wheel work stand (69329955000)

– Stand motorcycle upright, align lifting gear to the link fork with the adapters, and raise motorcycle.

13.2 Removing the rear of the motorcycle from the lifting gear

NOTE

Material damage The vehicle may be damaged if parked incorrectly.
Damage can occur if the vehicle rolls away or falls over.
The components for parking the vehicle are designed only for the weight of the vehicle.
– Park the vehicle on a firm and level surface.
– Make sure that nobody sits on the vehicle when it is parked on a stand.

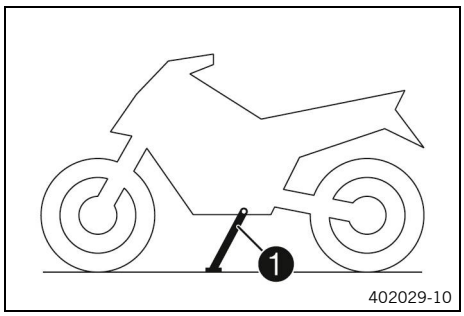

– Secure the motorcycle against falling over.
– Remove the rear lifting gear and lean the vehicle on side stand ❶.
– Remove the retaining adapter from the link fork.

13.3 Lifting the motorcycle with the front lifting gear

NOTE

Material damage The vehicle may be damaged if parked incorrectly.
Damage can occur if the vehicle rolls away or falls over.
The components for parking the vehicle are designed only for the weight of the vehicle.
– Park the vehicle on a firm and level surface.
– Make sure that nobody sits on the vehicle when it is parked on a stand.

Preparatory work

– Raise the motorcycle with the rear lifting gear. (p. 97)
– Remove the front top fender. (p. 112)

Main work

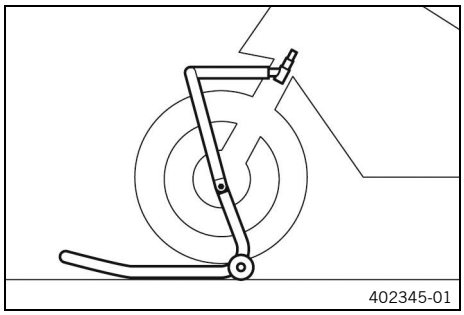

– Move the handlebar to the straight-ahead position.
– Use suitable lifting gear when attaching the steering stem.
– Align the front lifting gear with the fork legs.

Always raise the motorcycle at the rear first.

– Lift the motorcycle at the front.

13.4 Taking the motorcycle off the front lifting gear

NOTE

Material damage The vehicle may be damaged if parked incorrectly.
Damage can occur if the vehicle rolls away or falls over.
The components for parking the vehicle are designed only for the weight of the vehicle.
– Park the vehicle on a firm and level surface.
– Make sure that nobody sits on the vehicle when it is parked on a stand.

Main work

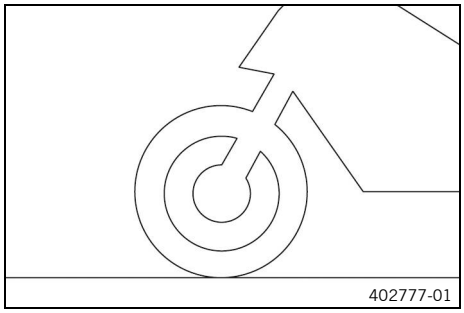

– Secure the motorcycle against falling over.
– Remove the front lifting gear.

Reworking

– Install the front top fender. (p. 112)

13.5 Removing the seat

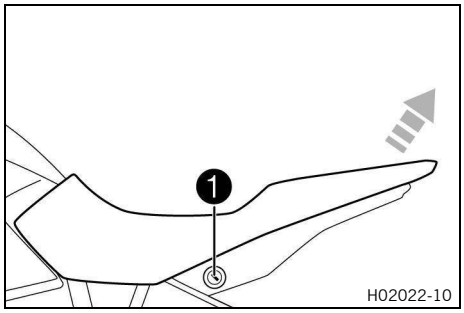

- Insert the ignition key in seat lock ❶ and turn it clockwise.
- Lift up the seat at the rear, pull it back, and lift off.
- Remove the ignition key.

13.6 Mounting the seat

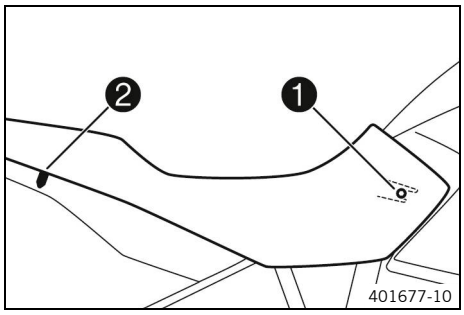

- Hook holding lug ❶ of the seat onto the fuel tank, lower the rear and push it forward.
- Insert locking pin ❷ into the lock housing and push down the rear of the seat until the locking pin engages with a click.
- Check that the seat is correctly mounted.

13.7 Checking the chain for dirt

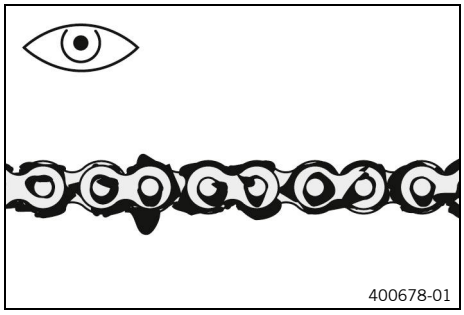

- Check the chain for coarse dirt accumulation.
  - » If the chain is very dirty:
    - Clean the chain. (p. 99)

13.8 Cleaning the chain

WARNING

Danger of accidents Oil, grease or wax on the brake discs reduces the brake action.

- Always keep the brake discs free of oil, fat and wax.
- Clean the brake discs with brake cleaner when necessary.

WARNING

Danger of accidents Lubricants on the tires reduces the road grip.

- Remove lubricants from the tires using a suitable cleaning agent.

NOTE

Environmental hazard Hazardous substances cause environmental damage.

- Dispose of oils, grease, filters, fuel, cleaning agents, brake fluid, etc. correctly and in accordance with the applicable regulations.

Note
The service life of the chain depends largely on its maintenance.

Preparatory work

– Raise the motorcycle with the rear lifting gear. (p. 97)

Main work

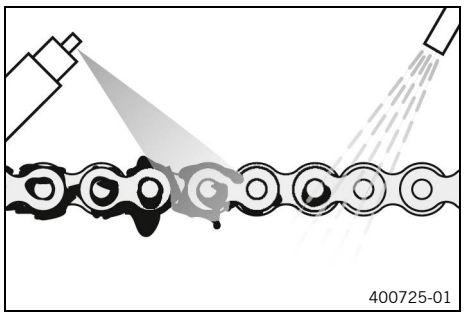

– Rinse off the loose dirt with a gentle jet of water.
– Remove old grease residues with a chain cleaner.

Chain cleaner (p. 187)

– After drying, apply chain spray.

Street chain spray (p. 185)

Reworking

– Remove the rear of the motorcycle from the lifting gear. (p. 97)

13.9 Checking the chain tension

WARNING
Danger of accidents Incorrect chain tension can damage components and result in an accident.
If the chain is tension is too high, the chain, front sprocket, rear sprocket, transmission, and rear wheel bearings wear more quickly. Some components may break if overloaded.
If the chain is too loose, the chain may fall off the front sprocket or the rear sprocket. This can damage the rear wheel or the engine.
– Check the chain tension regularly.
– Set the chain tension in accordance with the specification.

Preparatory work

– Raise the motorcycle with the rear lifting gear. (p. 97)

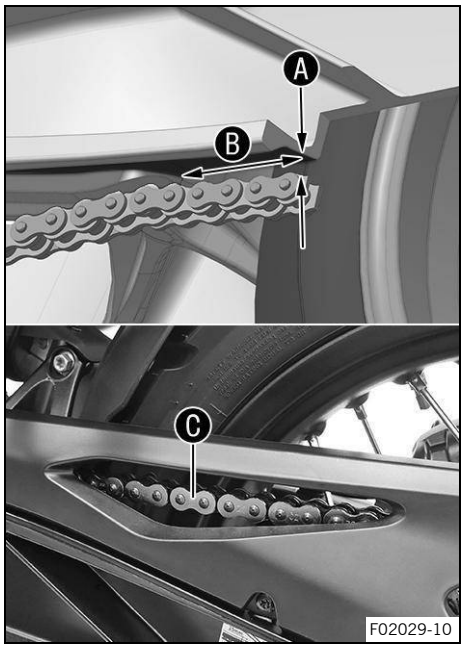

Main work

– Shift the transmission into Leerlaufstellung N.
– Push the chain behind the chain sliding piece up and determine the chain tension A between the link fork and the upper edge of the chain.

Distance B from the chain sliding piece	2.5 cm (0.98 in)
Measure the distance from the flat part of the link fork directly above the chain, not from the edge of the link fork.	
Chain tension	2 mm … 5 mm (0.08 in … 0.20 in)
The top part of chain C must be taut.	
Chain wear is not always even, so repeat this measurement at different positions on the chain.	

» If the chain tension does not meet the specification:
  – Adjust the chain tension. (p. 101)

– Remove the rear of the motorcycle from the lifting gear. (p. 97)

13.10 Adjusting the chain tension

WARNING

Danger of accidents Incorrect chain tension can damage components and result in an accident.

If the chain is tension is too high, the chain, front sprocket, rear sprocket, transmission, and rear wheel bearings wear more quickly. Some components may break if overloaded.

If the chain is too loose, the chain may fall off the front sprocket or the rear sprocket. This can damage the rear wheel or the engine.

– Check the chain tension regularly.
– Set the chain tension in accordance with the specification.

Preparatory work

– Raise the motorcycle with the rear lifting gear. (p. 97)
– Check the chain tension. (p. 100)

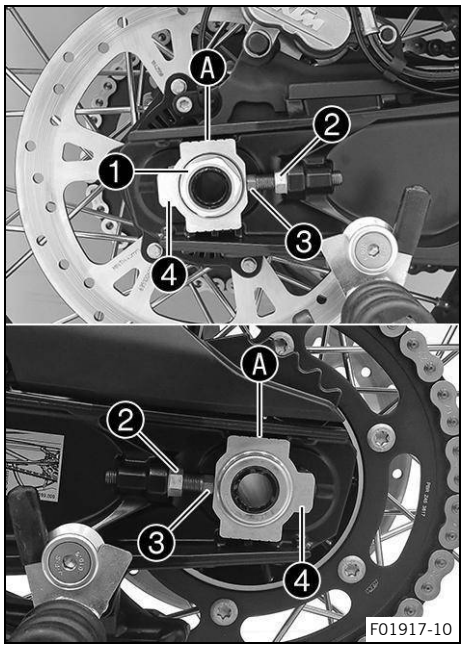

Main work

– Loosen nut ❶.
– Loosen nuts ❷.
– Adjust the chain tension by turning adjusting screws ❸ left and right.

Chain tension	2 mm … 5 mm (0.08 in … 0.20 in)
In order for the rear wheel to be correctly aligned, the markings on the left and right chain adjusters must be in the same position relative to reference markings Ⓐ.	
The upper part of the chain must be taut.	
Chain wear is not always even, so repeat this measurement at different positions on the chain.	

– Tighten nuts ❷.
– Make sure that chain adjusters ❹ are fitted correctly on adjusting screws ❸.
– Tighten nut ❶.

Nut, wheel spindle, rear	
M25×1.5	90 Nm (66.4 ft·lb_f) Long-life grease

Reworking

– Check the chain tension. (p. 100)

13.11 Checking the chain, rear sprocket, front sprocket, and chain guide

Preparatory work

– Raise the motorcycle with the rear lifting gear. (p. 97)

Main work

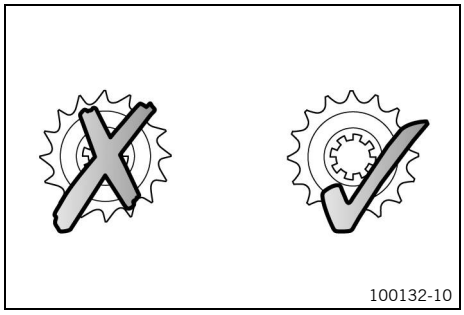

– Shift the transmission into Leerlaufstellung N.
– Check the chain, rear sprocket, and front sprocket for wear.
  » If the chain, rear sprocket, or front sprocket is worn:
    – Change the drivetrain kit.

Always replace the front sprocket, rear sprocket, and chain together.

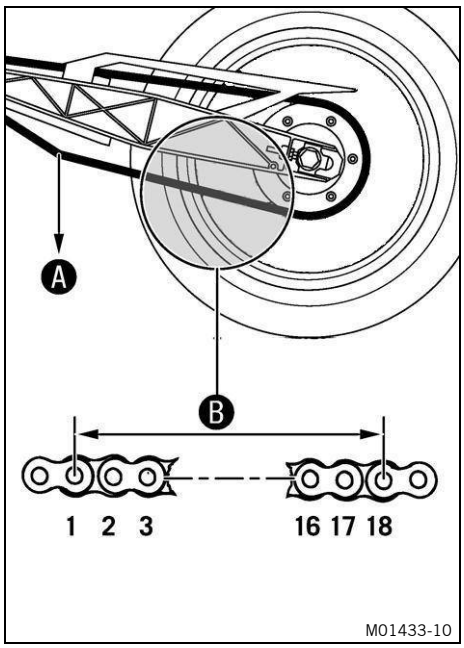

– Pull on the lower chain section with specified weight A.

Weight, chain wear measurement	15 kg (33.1 lb)

– Measure distance B of chain rollers in the lower chain section.

Maximum distance B of chain rollers at the longest chain section	272 mm (10.71 in)
Chain wear is not always even, so repeat this measurement at different positions on the chain.	

» If distance B is greater than the specified measurement:
  – Change the drivetrain kit.

When installing a new chain, also replace the rear sprocket and front sprocket.

Note
New chains wear out faster on old, worn sprockets.
For safety reasons, the chain has no chain joint.

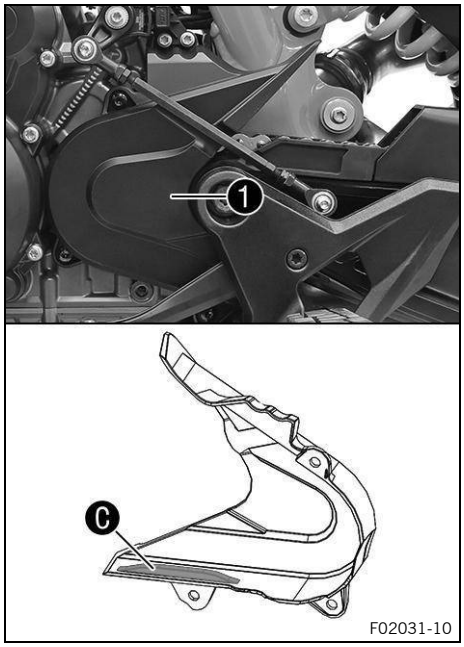

– Check the engine sprocket cover 1 for wear.
» If the engine sprocket cover is highly worn in the marked area C:
  – Change the engine sprocket cover.
– Check the engine sprocket cover 1 for tightness.
» If the engine sprocket cover is loose:
  – Tighten the screws on the engine sprocket cover.

Screw, front sprocket cover	
M5	5 Nm (3.7 ft·lb_f) **Loctite® 243**

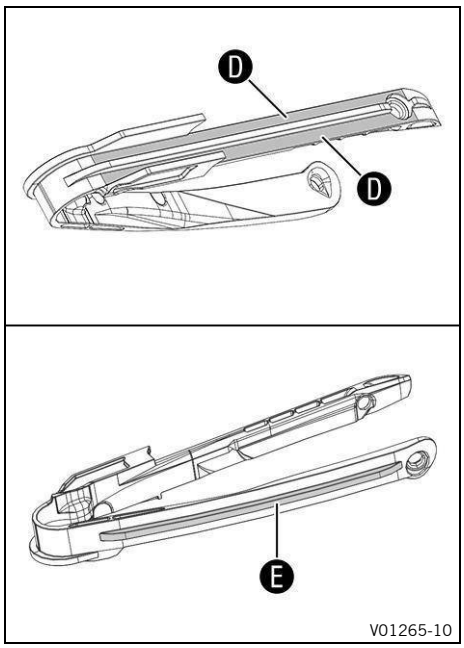

– Check the chain slider at the top for wear.
  » If continuous signs of wear to the chain are visible on the chain slider in the areas D marked:
    – Change the chain slider.
  » If the chain sliding guard is highly worn on the underside in the marked area E:
    – Change the chain slider.
– Check that the chain slider is firmly seated.
  » If the chain slider is loose:
    – Tighten the screws of the chain slider.

Remaining screws on chassis	
M5	5 Nm (3.7 ft·lb_f)

Reworking

– Remove the rear of the motorcycle from the lifting gear. (p. 97)

13.12 Removing the left side cover

Preparatory work

– Remove the seat. (p. 99)

Main work

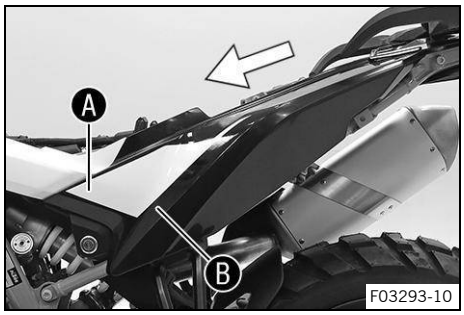

– Remove left side cover from the rubber bushings in the areas A and B.
– Pull off the left side cover sideways and remove it toward the front.

13.13 Installing the left side cover

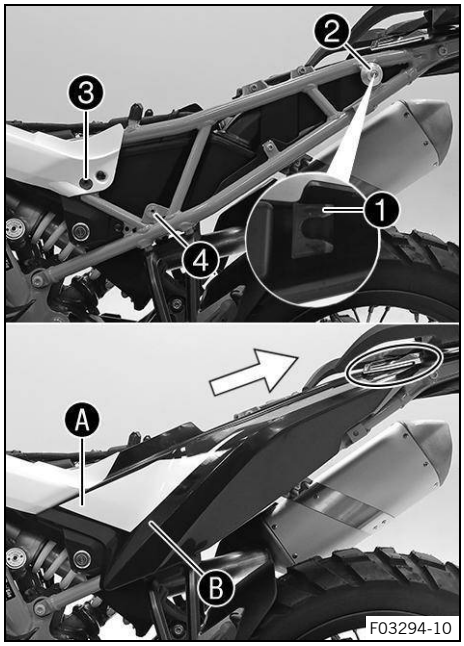

Main work

– Position the left side cover with holding lug ❶ on bushing ❷ and push backward.
  ✓ The left side cover engages under the tail part.
– Press the left side cover in area Ⓐ into rubber bushing ❸ and press into rubber bushing Ⓑ in area ❹.

Reworking

– Mount the seat. (p. 99)

13.14 Removing the right side cover

Preparatory work

– Remove the seat. (p. 99)

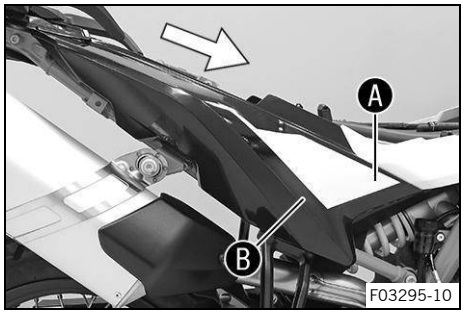

Main work

– Remove the side cover from the rubber bushings in areas Ⓐ and Ⓑ.
– Pull off the right side cover sideways and remove it toward the front.

13.15 Installing the right side cover

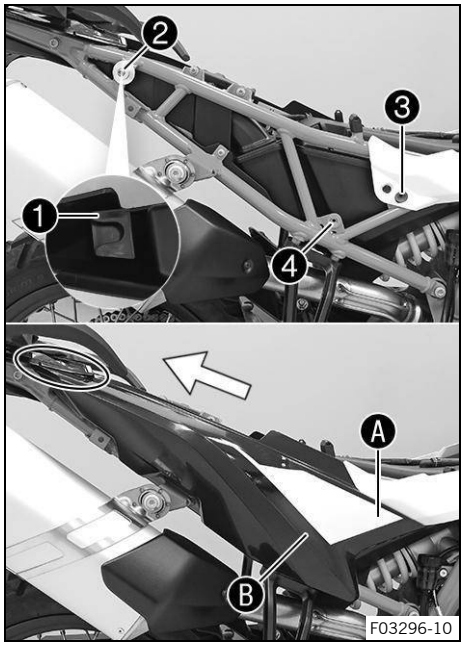

Main work

– Position the right side cover with holding lug ❶ on bushing ❷ and push backward.
  ✓ The right side cover engages under the tail part.
– Press the right side cover in the area Ⓐ into rubber bushing ❸ and press into rubber bushing Ⓑ in area ❹.

Reworking

– Mount the seat. (p. 99)

13.16 Removing the battery cover

Preparatory work

– Remove the seat. (p. 99)

Main work

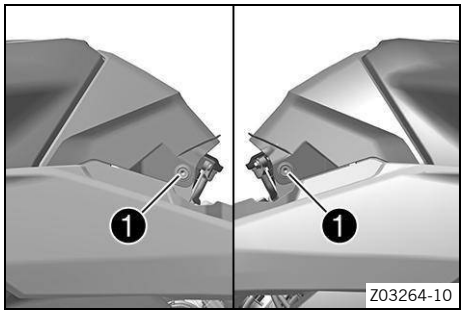

– Remove screws ❶ and bushings.
– Remove the battery cover from above.

13.17 Installing the battery cover

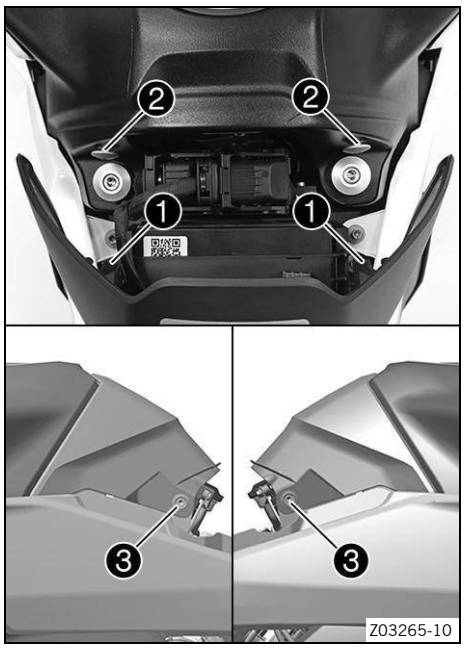

Main work

– Position the battery cover with holding lugs ❶ on bushings ❷ and push downward.
  ✓ The battery cover engages on the left and right under the fuel tank spoiler.
– Mount screw ❸ and bushing and tighten.

Screw, seat installation	
M6	6 Nm (4.4 ft·lb$_f$)

Reworking

– Mount the seat. (p. 99)

13.18 Removing left fuel tank spoiler

Preparatory work

– Remove the seat. (p. 99)
– Remove the left side cover. (p. 104)
– Remove the battery cover. (p. 106)

Main work

– Remove screw ❶.
– Remove ❷ screws.

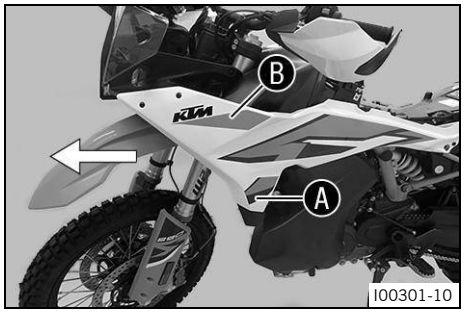

– Remove the left fuel tank spoiler from the rubber bushing in area Ⓐ.
– Pull the left fuel tank spoiler in area Ⓑ out of the bracket.
– Pull off the left fuel tank spoiler sideways and take it off toward the front.

13.19 Installing the left fuel tank spoiler

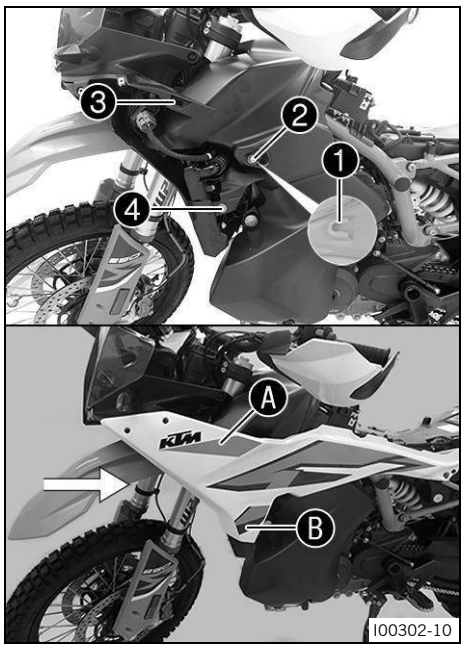

Main work

- Position the left fuel tank spoiler with holding lug ❶ on bushing ❷ and push backward laterally.
- Press the left fuel tank spoiler into bracket Ⓐ in area ❸.
- Press the left fuel tank spoiler into rubber bushing ❹ in area Ⓑ.

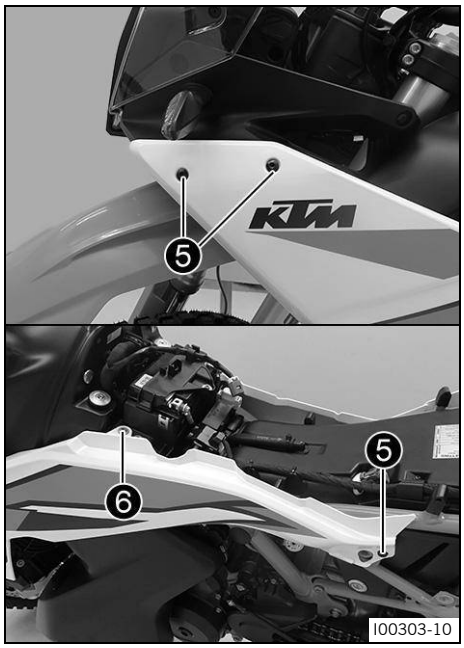

- Mount screws ❺, but do not tighten yet.

Screw, trim	
M5	3 Nm (2.2 ft·lb$_f$)

- Mount screw ❻, but do not tighten yet.

Screw, fuel tank spoiler	
M6	5 Nm (3.7 ft·lb$_f$)

✓ The front edge of the left fuel tank spoiler is evenly aligned.

- Tighten all the screws of the left fuel tank spoiler.

Reworking

- Install the battery cover. (p. 107)
- Install the left side cover. (p. 105)
- Mount the seat. (p. 99)

13.20 Removing the right fuel tank spoiler

Preparatory work

- Remove the seat. (p. 99)
- Remove the right side cover. (p. 105)
- Remove the battery cover. (p. 106)

Main work

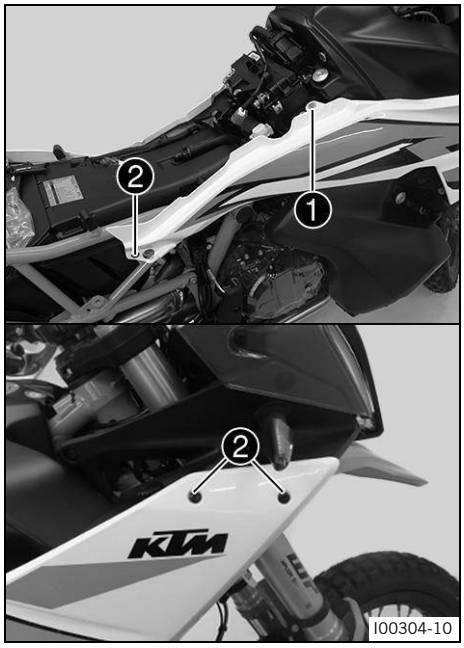

- Remove screw ❶.
- Remove ❷ screws.

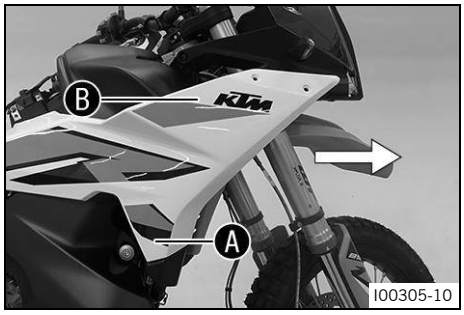

- Remove the fuel tank spoiler from the rubber bushing in area Ⓐ.
- Pull the right fuel tank guard in area Ⓑ out of the bracket.
- Pull off the right fuel tank spoiler sideways and take off toward the front.

13.21 Installing the right fuel tank spoiler

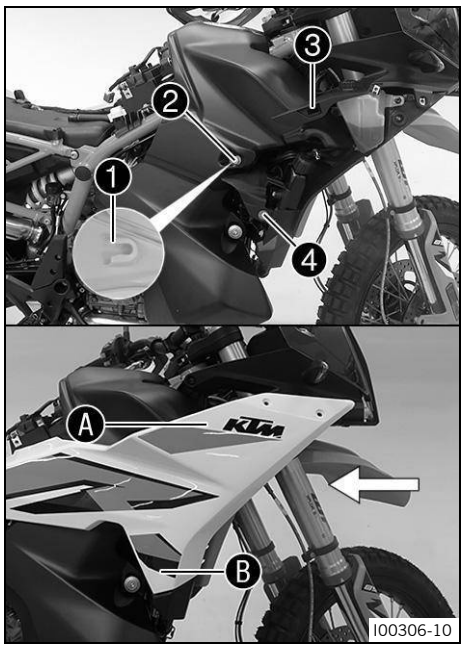

Main work

- Position the right fuel tank spoiler with holding lug ❶ on bushing ❷ and push backward laterally.
- Press the right fuel tank spoiler into bracket Ⓐ in area ❸.
- Press the right fuel tank spoiler into rubber bushing ❹ in area Ⓑ.

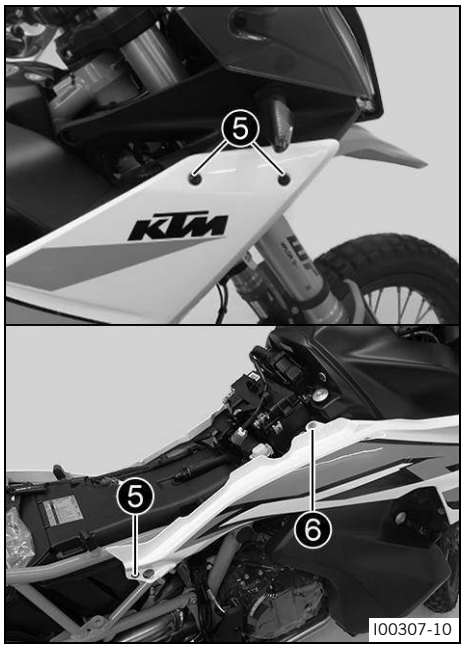

- Mount screws ❺, but do not tighten yet.

Screw, trim	
M5	3 Nm (2.2 ft·lb$_f$)

- Mount screw ❻, but do not tighten yet.

Screw, fuel tank spoiler	
M6	5 Nm (3.7 ft·lb$_f$)

✓ The front edge of the right fuel tank spoiler is evenly aligned.

- Tighten all the screws of the right fuel tank spoiler.

Reworking

- Install the battery cover. (p. 107)
- Install the right side cover. (p. 106)
- Mount the seat. (p. 99)

13.22 Removing the front top fender

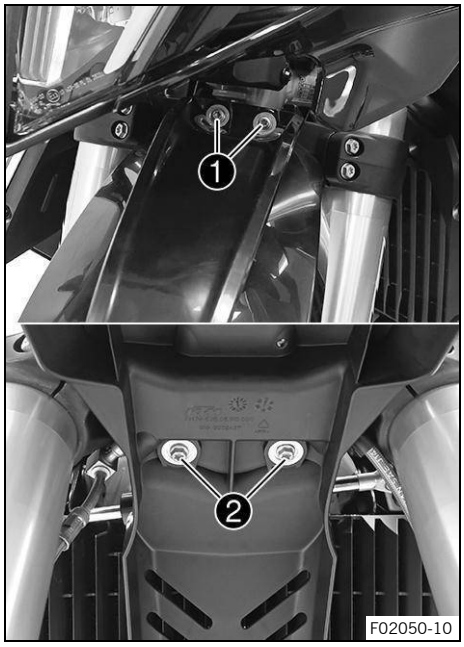

– Remove ❶ screws.
– Remove ❷ screws.
– Take the fender off to the front.

13.23 Installing the front top fender

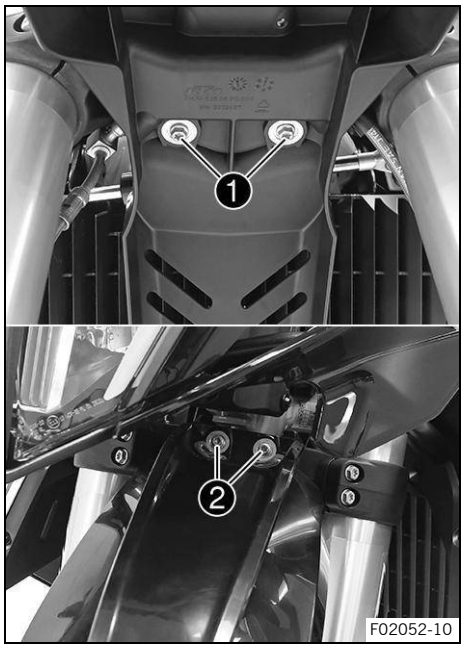

– Position the front fender. Mount screws ❶, but do not tighten yet.

Remaining screws on chassis	
M6	10 Nm (7.4 ft·lb$_f$)

– Mount screws ❷, but do not tighten yet.

Remaining screws on chassis	
M6	10 Nm (7.4 ft·lb$_f$)

✓ The fender is evenly aligned to the front.
– Tighten all screws on the front fender.

13.24 Removing the fork protector

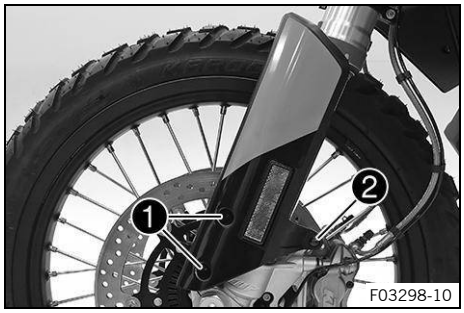

- Remove ❶ screws.
- Remove screw ❷.
- Take off the fork protector at the front.
- Repeat these steps on the opposite side.

13.25 Installing the fork protector

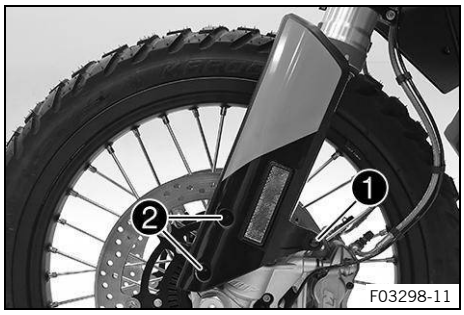

- Position the fork protector. Mount screw ❶, but do not tighten yet.

Screw, fork protector	
M5×12	3 Nm (2.2 ft·lb$_f$)

- Mount screws ❷, but do not tighten yet.

Screw, fork protector	
M5×17	3 Nm (2.2 ft·lb$_f$)

✓ The fork protector is evenly aligned to the front.
- Tighten all screws of the fork protector.
- Repeat these steps on the opposite side.

13.26 Cleaning the dust boots of the fork legs

Preparatory work

- Raise the motorcycle with the rear lifting gear. (p. 97)
- Remove the front top fender. (p. 112)
- Lift the motorcycle with the front lifting gear. (p. 97)

Main work

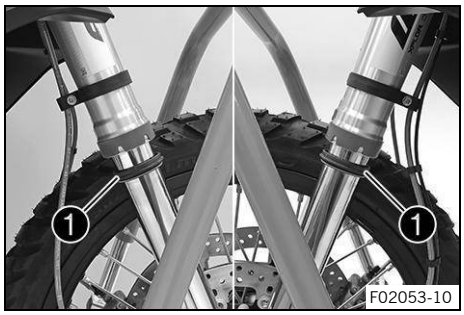

- Push dust boot ❶ downward on both fork legs.

Note

The dust boots should remove dust and coarse dirt particles from the inner fork tubes.

Over time, dirt can accumulate behind the dust boots.

If this dirt is not removed, the oil seals behind can start to leak.

WARNING

Danger of accidents Oil, grease or wax on the brake discs reduces the brake action.

- Always keep the brake discs free of oil, fat and wax.
- Clean the brake discs with brake cleaner when necessary.

– Clean and oil the dust boots and the inner fork tube of both fork legs.

Universal oil spray (p. 185)

– Press the dust boots back into their installation position.
– Remove excess oil.

Reworking

– Take the motorcycle off the front lifting gear. (p. 98)
– Install the front top fender. (p. 112)
– Remove the rear of the motorcycle from the lifting gear. (p. 97)

13.27 Removing the windshield

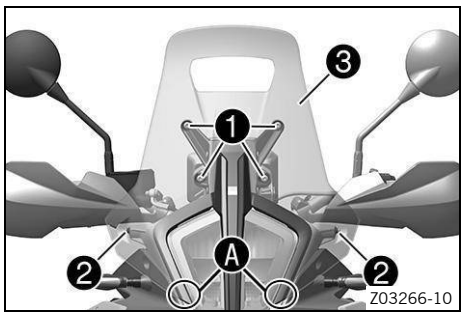

– Remove screws 1.
– Remove screws 2 and detach windshield 3 in areas A.

13.28 Installing the windshield

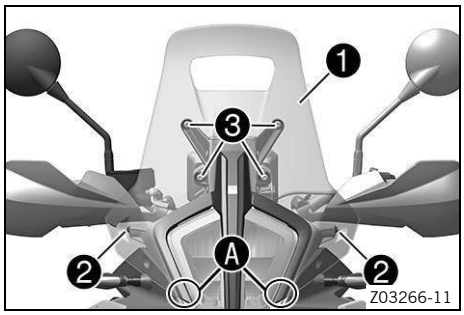

– Mount windshield 1 in areas A.
– Mount and tighten screws 2.

Remaining screws on chassis	
M5	5 Nm (3.7 ft·lb$_f$)

– Mount and tighten screws 3.

Remaining screws on chassis	
M5	5 Nm (3.7 ft·lb$_f$)

13.29 Removing the skid plate

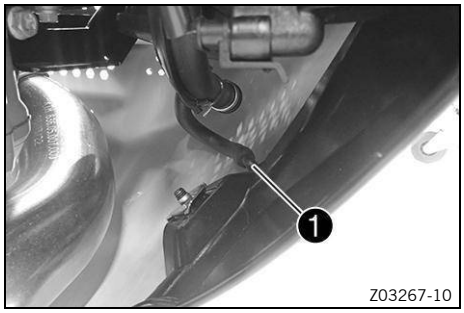

– Pull out hose ❶ from the angle piece.

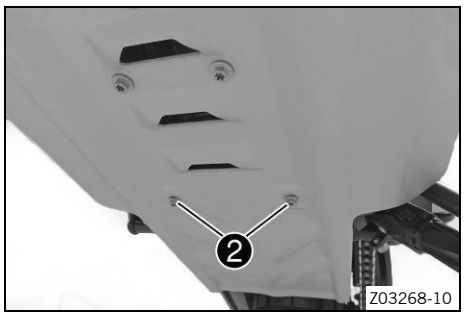

– Remove ❷ screws.

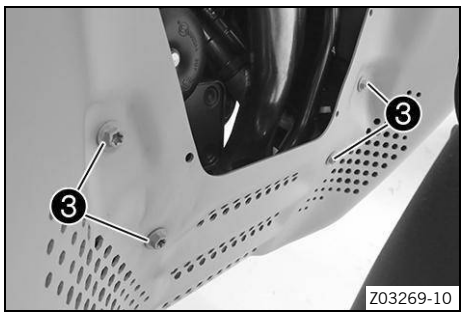

– Remove ❸ screws.

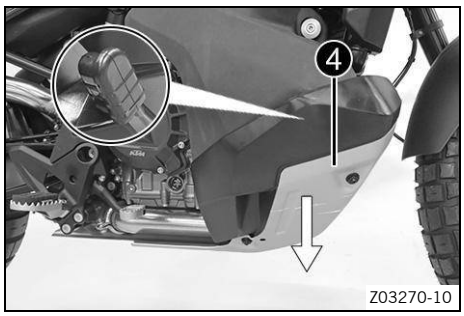

– Remove engine guard ❹.
– Pull the damping rubbers out of the cut-outs on both sides.

13.30 Installing the skid plate

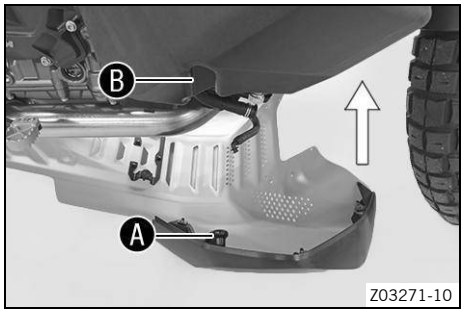

– Position the motor guard.
  ✓ Damping rubbers Ⓐ engage in cut-outs Ⓑ on both sides.

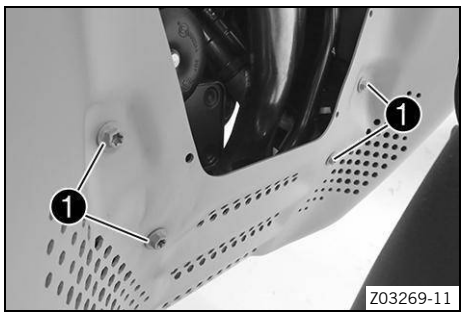

– Mount screws ❶, but do not tighten yet.

Screw, engine guard	
M6×10	10 Nm (7.4 ft·lb$_f$) **Loctite® 243**

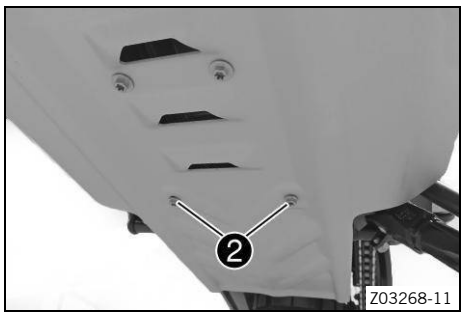

– Mount screws ❷, but do not tighten yet.

Screw, engine guard	
M6	8 Nm (5.9 ft·lb$_f$)

– Tighten all the screws of the skid plate.

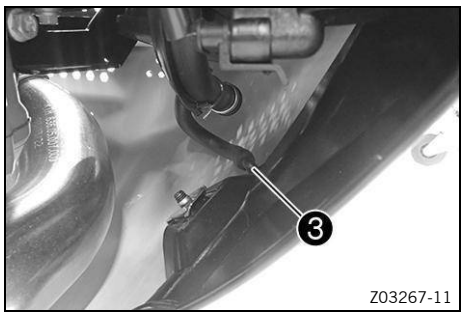

– Attach hose ❸ to the angle piece.

13.31 Removing the muffler

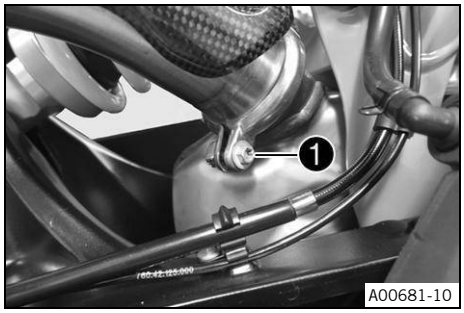

– Remove screw 1.
– Remove the clamp.

– Remove screw 2 with the washer.
– Take off the main silencer.

Note
Both the accessory main silencer as well as the original main silencer are included in the scope of supply.

13.32 Installing muffler

– Position the main silencer with the gasket.

Note
Both the accessory main silencer as well as the original main silencer are included in the scope of supply.

– Mount screw 1 with washer, but do not tighten yet.

Screw, main silencer holder	
M8	25 Nm (18.4 ft·lb$_f$)

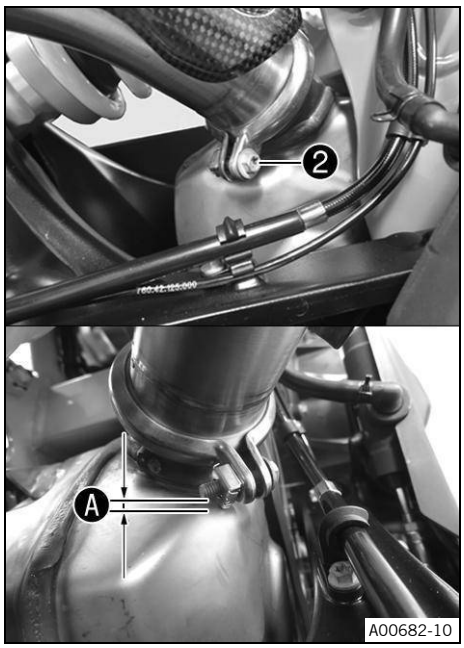

– Position the clamp.

Distance A	1 mm (0.04 in)
The clamp must not touch the brake line when the rear wheel suspension compresses.	

– Mount and tighten screw 2.

Screw, presilencer exhaust clamp	
M6	8 Nm (5.9 ft·lb$_f$) Copper paste

– Tighten screw 1.

Screw, main silencer holder	
M8	25 Nm (18.4 ft·lb$_f$)

14.1 Anti-lock braking system

WARNING

Danger of accidents Changes to the vehicle impair the function of the ABS.

- Do not make any changes to the suspension travel.
- Only use spare parts on the brake system which have been approved and recommended by the vehicle manufacturer.
- Only use tires and wheels approved and recommended by the vehicle manufacturer with the corresponding speed rating.
- Maintain the specified tire pressure.
- Ensure that service work and repairs are performed professionally.

WARNING

Danger of accidents Driving aids can reduce the probability of a fall only within physical limits.

It is not always possible to compensate for certain riding situations, for example with luggage loaded with a high center of gravity, varying road surfaces, steep descents or full braking without disengaging the gear.

- Adapt your riding style to the road conditions and your driving ability.

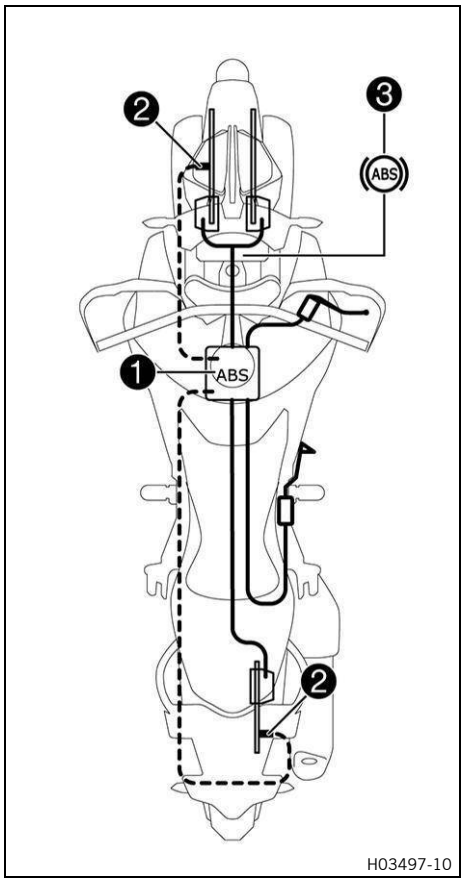

The **ABS** module ❶, which consists of a hydraulic unit, ABS control unit, and return pump, is installed under the fuel tank. One wheel speed sensor ❷ is located in each case on the front and the rear wheel.

WARNING

Danger of accidents An incorrectly selected ABS mode makes it more difficult to control the vehicle.

The ABS modes are each only suitable for certain conditions.

- Always select an ABS mode that suits the ground and the riding situation.

ABS is a safety system that prevents locking of the wheels when riding straight ahead without the influence of lateral forces, as far as the laws of physics allow.

ABS has two operating modes: ABS mode **Road** and ABS mode **Offroad** (optional).

In the **Road** ABS mode, the brakes are also applied to the rear wheel when the front brake is applied. ABS regulates both wheels.

In ABS mode **Offroad** (optional), the front brake slows the front wheel. The rear brake slows the rear wheel. There is no ABS control on the rear wheel.

Note

In ABS mode **Offroad** (optional), the ABS regulates the front wheel later and the rear wheel can lock, resulting in a risk of falling.

The ABS operates with two independent brake circuits (front and rear brakes). When the ABS control unit detects a locking tendency in a wheel, ABS begins regulating the brake pressure. The control function causes a slight pulsing of the hand and foot brake levers.

Note

If driving aids, e.g. the cruise control system or **MSC** have initiated or supported a braking maneuver, the brake lever pressure point may change slightly during the next braking maneuver due the system.

The performance and function of the brake system are not impaired by this.

The ABS warning light ❸ must light up after the ignition is switched on and go out after starting off. If it does not go out after starting off or if it lights up while riding, this indicates a malfunction in the ABS. In this case, the ABS is no longer enabled and the wheels may lock during braking. The brake system itself stays functional; only ABS control is not available.

The ABS warning light may also light up if the rotating speeds of the front and rear wheels differ greatly under extreme riding conditions, for example when doing a wheelie or if the rear wheel spins. This causes the ABS to switch off.

To reactivate the ABS, stop the vehicle and switch off the ignition. The ABS is reactivated when the vehicle is switched on again. The ABS warning light goes out after starting off.

14.2 Checking the brake discs

WARNING

Danger of accidents Worn-out brake discs reduce the braking action.

– Make sure that worn-out brake discs are replaced immediately.

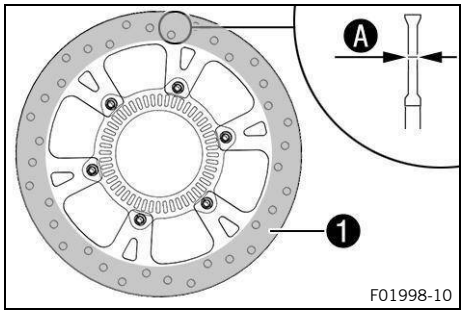

– Check the brake disc thickness of the front and rear brake disc at several places on the disc to see if they conform to measurement Ⓐ.

Brake disc wear limit	
front	4.5 mm (0.177 in)
rear	4.5 mm (0.177 in)

Note

Wear will reduce the thickness of the brake disc at contact surface ❶ of the brake linings.

» If the brake disc thickness is less than the specified value.
  – Change the front brake discs.
  – Change the brake discs on the rear brake.

– Check the front and rear brake discs for damage, cracks, and deformation.
  » If the brake disc shows signs of damage, cracks, or deformation:
    – Change the front brake discs.
    – Change the brake discs on the rear brake.

14.3 Checking the brake fluid level for the front brake

WARNING

Danger of accidents Brake fluid which is too old or of the wrong type impairs the function of the brake system.

– Make sure that brake fluid for the front and rear brake is changed in accordance with the service schedule.
– Make sure that only clean, approved brake fluid from a tightly sealed container is used.

WARNING

Danger of accidents An insufficient brake fluid level will cause the brake system to fail.

If the brake fluid level drops below the specified marking or the specified value, the brake system has a leak or the brake pads are worn down.

– Have the brake system checked and make sure that the problem has been eliminated before the vehicle is used again.

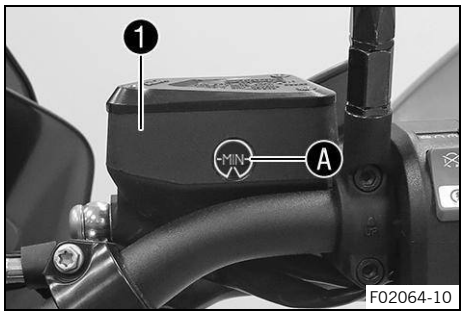

– Move brake reservoir 1 mounted on the handlebar to a horizontal position.
– Check the brake fluid level in the brake fluid reservoir.
  » If the brake fluid level has dropped below **MIN** marking A:
    – Add brake fluid for the front brake. (p. 121)

14.4 Adding brake fluid for the front brake

WARNING

Danger of accidents Brake fluid which is too old or of the wrong type impairs the function of the brake system.

– Make sure that brake fluid for the front and rear brake is changed in accordance with the service schedule.
– Make sure that only clean, approved brake fluid from a tightly sealed container is used.

WARNING

Danger of accidents An insufficient brake fluid level will cause the brake system to fail.

If the brake fluid level drops below the specified marking or the specified value, the brake system has a leak or the brake pads are worn down.

– Have the brake system checked and make sure that the problem has been eliminated before the vehicle is used again.

WARNING

Health hazard Brake fluid is a harmful substance.

- Keep brake fluid out of the reach of children.
- Wear suitable protective clothing and safety glasses.
- Do not allow brake fluid to come into contact with the skin, the eyes, or clothing.
- Consult a doctor immediately if brake fluid has been ingested.
- Rinse the affected area with plenty of water in the event of contact with the skin.
- Rinse eyes thoroughly with water immediately and consult a doctor if brake fluid comes into contact with the eyes.
- If brake fluid spills on to your clothing, change the clothing.

NOTE

Environmental hazard Hazardous substances cause environmental damage.

- Dispose of oils, grease, filters, fuel, cleaning agents, brake fluid, etc. correctly and in accordance with the applicable regulations.

Note

Avoid contact between brake fluid and painted parts. Brake fluid corrodes paint.

Preparatory work

- Check that the brake pads of the front brake are secured. (p. 123)

Main work

- Move the brake reservoir mounted on the handlebar to a horizontal position.
- Remove screws ❶.
- Take off cover ❷ with membrane ❸.
- Add brake fluid up to the marking ❹.

Brake fluid DOT 5.1 (p. 185)

- Position cover ❷ with membrane ❸.
- Mount screws ❶ and tighten in the order Ⓐ Ⓑ Ⓒ.

Brake fluid reservoir cover, front	
	2 Nm (1.5 ft·lb$_f$)

Immediately clean up any brake fluid that has overflowed or spilled with water.

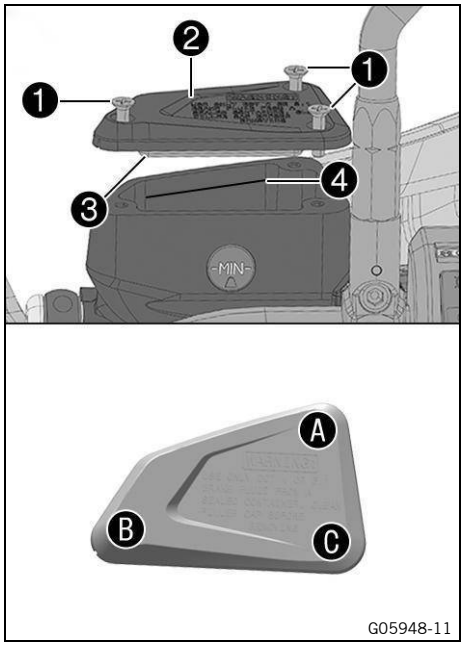

14.5 Checking that the brake pads of the front brake are secured

WARNING

Danger of accidents Worn brake pads reduce the brake action.

– Make sure that worn brake pads are replaced immediately.

WARNING

Danger of accidents Damaged brake discs reduce the braking action.

If the brake linings are not changed in time, the brake lining carriers grind against the brake disc. As a consequence, the brake action is greatly reduced and the brake discs are destroyed.

– Check the brake linings regularly.

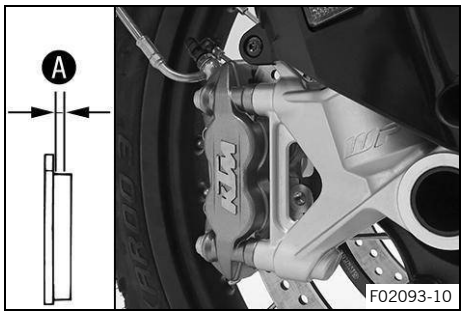

– Check all brake linings on both brake calipers to ensure they have the minimum thickness A.

Minimum pad thickness A	≥ 1 mm (≥ 0.04 in)

» If the minimum thickness is less than specified:

– Change the front brake pads.

– Check all the brake linings on both the brake calipers for damage and cracking.

» If there is damage or cracking:

– Change the front brake pads.

– Check that the brake pads are secured.

» If the brake pads are not secured correctly:

– Secure brake pads, replace with new parts if necessary.

14.6 Checking the free travel of the brake pedal

WARNING

Danger of accidents The brake system fails in the event of overheating.

If there is no free travel on the brake lever, pressure builds up in the brake system.

– Set the free travel on the brake lever as specified.

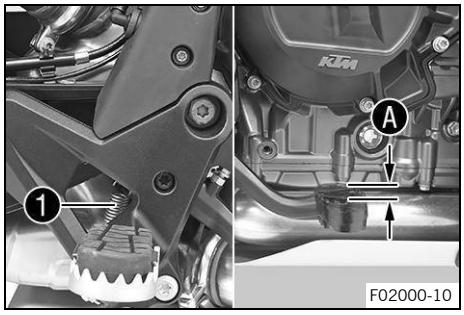

– Detach spring 1.

– Move the brake pedal back and forth between the end stop and the brake pedal cylinder piston actuation and check free travel A.

Free travel of brake pedal	3 mm … 5 mm (0.12 in … 0.20 in)

» If the free travel does not meet the specifications:

– Adjust the basic position of the brake pedal. (p. 73)

– Attach spring 1.

14.7 Checking the brake fluid level for the rear brake

WARNING

Danger of accidents Brake fluid which is too old or of the wrong type impairs the function of the brake system.

- Make sure that brake fluid for the front and rear brake is changed in accordance with the service schedule.
- Make sure that only clean, approved brake fluid from a tightly sealed container is used.

WARNING

Danger of accidents An insufficient brake fluid level will cause the brake system to fail.

If the brake fluid level drops below the specified marking or the specified value, the brake system has a leak or the brake pads are worn down.

- Have the brake system checked and make sure that the problem has been eliminated before the vehicle is used again.

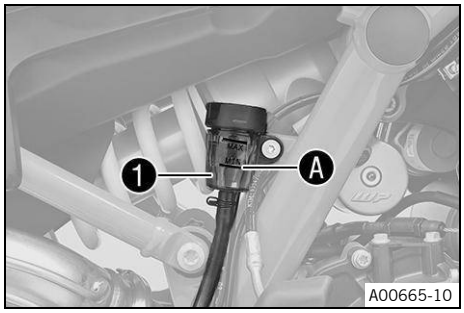

- Stand the vehicle upright.
- Check brake fluid level in brake fluid reservoir 1.
  - » If the fluid level reaches the **MIN** marking A:
    - Add brake fluid for the rear brake. (p. 124)

14.8 Adding brake fluid for the rear brake

WARNING

Danger of accidents Brake fluid which is too old or of the wrong type impairs the function of the brake system.

- Make sure that brake fluid for the front and rear brake is changed in accordance with the service schedule.
- Make sure that only clean, approved brake fluid from a tightly sealed container is used.

WARNING

Danger of accidents An insufficient brake fluid level will cause the brake system to fail.

If the brake fluid level drops below the specified marking or the specified value, the brake system has a leak or the brake pads are worn down.

- Have the brake system checked and make sure that the problem has been eliminated before the vehicle is used again.

WARNING

Health hazard Brake fluid is a harmful substance.

- Keep brake fluid out of the reach of children.
- Wear suitable protective clothing and safety glasses.
- Do not allow brake fluid to come into contact with the skin, the eyes, or clothing.
- Consult a doctor immediately if brake fluid has been ingested.
- Rinse the affected area with plenty of water in the event of contact with the skin.
- Rinse eyes thoroughly with water immediately and consult a doctor if brake fluid comes into contact with the eyes.
- If brake fluid spills on to your clothing, change the clothing.

NOTE

Environmental hazard Hazardous substances cause environmental damage.

– Dispose of oils, grease, filters, fuel, cleaning agents, brake fluid, etc. correctly and in accordance with the applicable regulations.

Note

Avoid contact between brake fluid and painted parts. Brake fluid corrodes paint.

Preparatory work

– Check that the brake pads of the rear brake are secured. (p. 125)

Main work

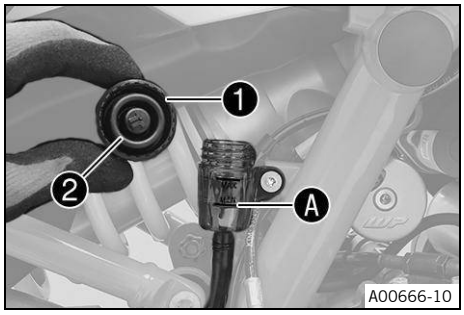

– Stand the vehicle upright.
– Remove screw cover 1 with insert and membrane 2.
– Add brake fluid up to the **MAX** marking A.

Brake fluid DOT 5.1 (p. 185)

– Mount and tighten screw cover 1 with the insert and membrane 2.

Brake fluid reservoir cover, rear	
	1.5 Nm (1.11 ft·lb$_f$)

Immediately clean up any brake fluid that has overflowed or spilled using water.

14.9 Checking that the brake pads of the rear brake are secured

WARNING

Danger of accidents Worn brake pads reduce the brake action.

– Make sure that worn brake pads are replaced immediately.

WARNING

Danger of accidents Damaged brake discs reduce the braking action.

If the brake linings are not changed in time, the brake lining carriers grind against the brake disc. As a consequence, the brake action is greatly reduced and the brake discs are destroyed.

– Check the brake linings regularly.

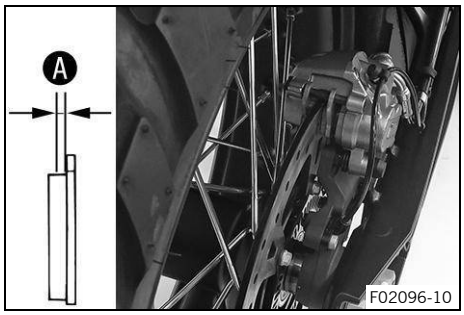

– Check the brake linings for minimum thickness A.

Minimum pad thickness A	≥ 1 mm (≥ 0.04 in)

» If the minimum thickness is less than specified:
  – Change the rear brake pads.

– Check the brake linings for damage and cracking.
» If there is damage or cracking:
  – Change the rear brake pads.

- Check that the brake pads are secured.
  - » If the brake pads are not secured correctly:
    - Secure brake pads, replace with new parts if necessary.

15.1 Removing the front wheel

Preparatory work

– Raise the motorcycle with the rear lifting gear. (p. 97)
– Remove the front top fender. (p. 112)
– Lift the motorcycle with the front lifting gear. (p. 97)

Main work

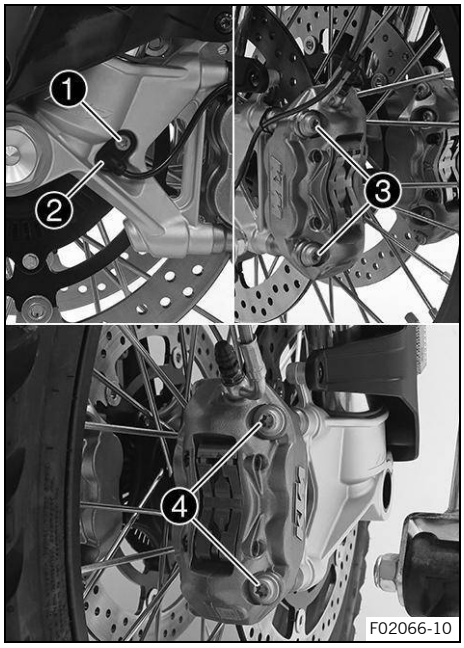

– Remove screw ❶ and pull wheel speed sensor ❷ out of the hole.
– Remove screws ❸ and ❹.
– Press back the brake linings by slightly tilting the left and right brake caliper laterally on the brake disc.
– Pull the left and right brake caliper carefully back from the brake disc and hang to the side.

> Do not operate the hand brake lever if the brake calipers have been removed.

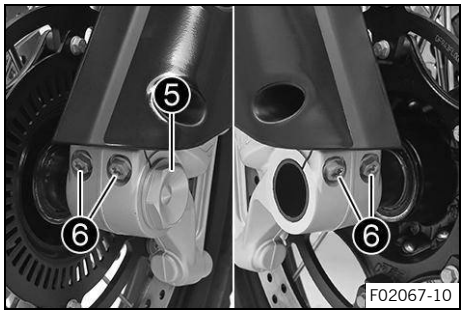

– Loosen screw ❺ by four turns.
– Loosen screws ❻.
– Press on screw ❺ to push the wheel spindle out of the fork shoe.
– Remove screw ❺.

WARNING

Danger of accidents Damaged brake discs reduce the braking action.

– Always lay the wheel down in such a way that the brake disc is not damaged.

– Hold front wheel and remove wheel spindle. Take the front wheel out of the fork.

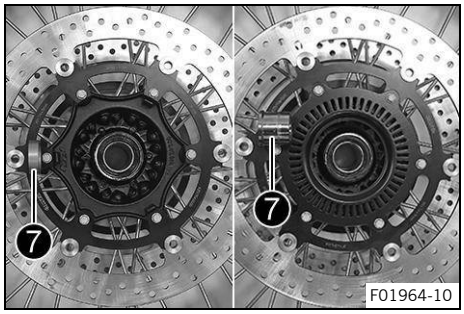

– Remove spacers ❼.

15.2 Installing the front wheel

WARNING

Danger of accidents Oil, grease or wax on the brake discs reduces the brake action.

– Always keep the brake discs free of oil, fat and wax.
– Clean the brake discs with brake cleaner when necessary.

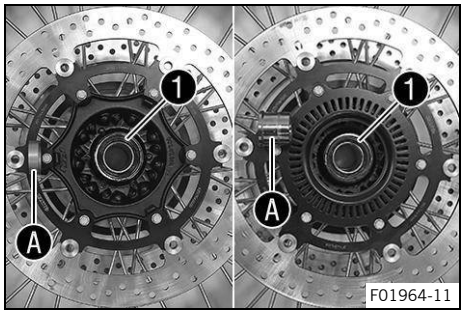

Main work

– Check the wheel bearings for damage and wear.
  » If the wheel bearings are damaged or worn:
    – Change the front wheel bearing.
– Clean and grease radial shaft seal ❶ and contact surfaces Ⓐ on the spacers.

Long-life grease (p. 185)

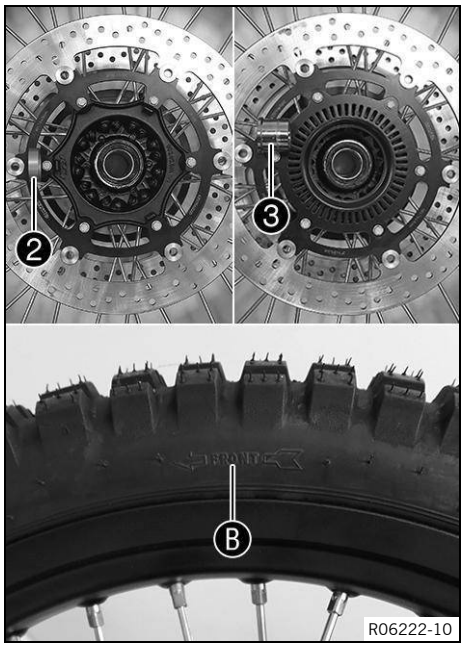

– Insert narrow spacer ❷ on the right in the direction of travel.
– Insert wide spacer ❸ on the left in the direction of travel.

Note

Arrow Ⓑ indicates the direction of travel of the front wheel.

The wheel speed sensor wheel is on the left viewed in the direction of travel.

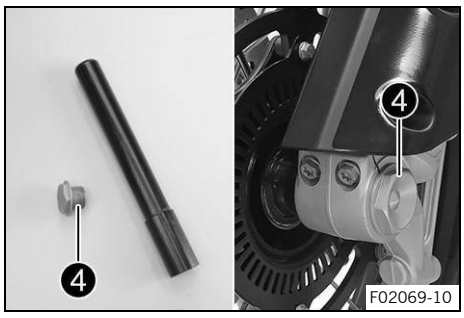

– Clean screw ❹ and the wheel spindle.
– Grease wheel spindle lightly.

Long-life grease (p. 185)

– Jack up the front wheel into the fork, position it, and insert the wheel spindle.
– Mount and tighten screw ❹.

Screw, wheel spindle, front	
M25×1.5	45 Nm (33.2 ft·lb$_f$) Long-life grease

Tip
Temporarily tighten one of the axle clamp screws so that the axle does not rotate with it.
Loosen the axle clamp screw again before compression to allow the fork legs to align.

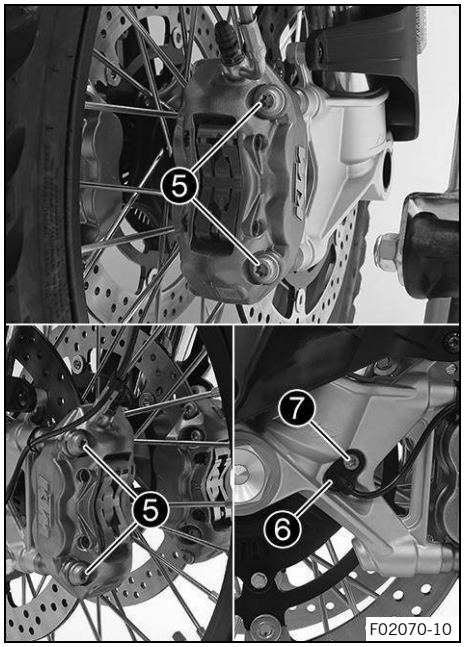

– Position both brake calipers.
✓ The brake linings are correctly positioned.
– Mount screws ❺ on both sides but do not tighten yet.

Screw, front brake caliper	
M10×1.25	45 Nm (33.2 ft·lb$_f$) **Loctite® 243**

– Operate the hand brake lever repeatedly until the brake pads are in contact with the brake disc and a pressure point is reached. Secure the hand brake lever in the activated position.
✓ The brake calipers straighten.
– Tighten screws ❺ on both sides.

Screw, front brake caliper	
M10×1.25	45 Nm (33.2 ft·lb$_f$) **Loctite® 243**

– Position wheel speed sensor ❻ in the hole.
– Mount and tighten screw ❼.

Screw, front wheel speed sensor	
M6	6 Nm (4.4 ft·lb$_f$)

– Remove the locking piece of the hand brake lever.
– Take the motorcycle off the front lifting gear. (p. 98)
– Remove the rear of the motorcycle from the lifting gear. (p. 97)

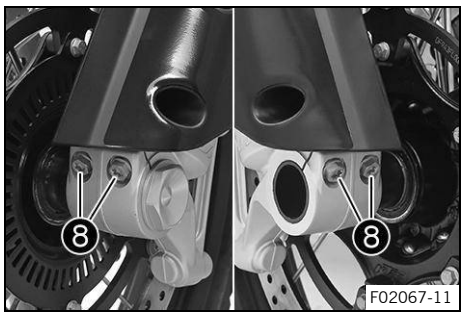

– Operate the front brake and compress the fork a few times firmly.
  ✓ The fork legs straighten.
– Tighten screws ❽.

Screw, fork shoe	
M8	15 Nm (11.1 ft·lb$_f$)

Reworking

– Install the front top fender. (p. 112)

15.3 Removing the rear wheel

Preparatory work

– Raise the motorcycle with the rear lifting gear. (p. 97)

Main work

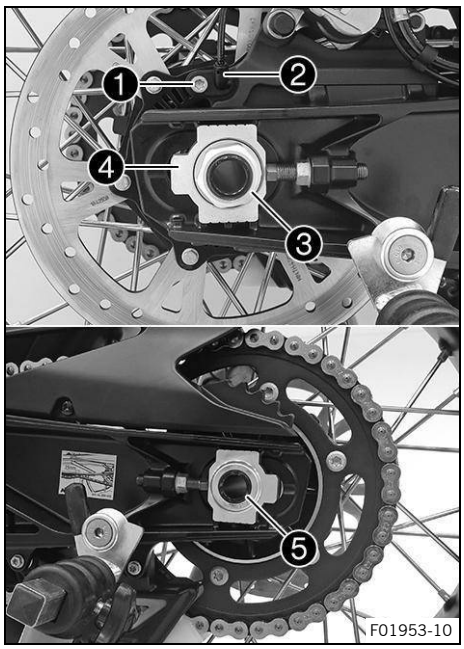

– Manually press the brake caliper toward the brake disc to push back the brake pistons.
– Remove screw ❶ and pull wheel speed sensor ❷ out of the hole.
– Remove nut ❸. Remove chain tension adjuster ❹.
– Pull out wheel spindle ❺ far enough to allow the rear wheel to be pushed forward.

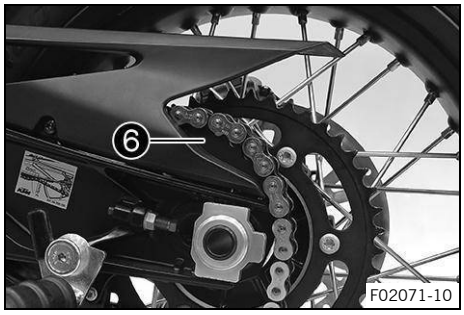

– Push the rear wheel forward as far as possible.
– Take the chain off the rear sprocket and place it on chain sprocket guard ❻.

Protect the components against damage by covering them.

– Hold the rear wheel and remove wheel spindle.
– Pull the rear wheel back until the brake caliper bracket is suspended freely between the brake disc and rim.

WARNING

Danger of accidents Damaged brake discs reduce the braking action.

– Always lay the wheel down in such a way that the brake disc is not damaged.

– Take the rear wheel out of the swingarm.

Do not actuate the brake pedal when the rear wheel is removed.

15.4 Installing the rear wheel

WARNING

Danger of accidents Oil, grease or wax on the brake discs reduces the brake action.

– Always keep the brake discs free of oil, fat and wax.
– Clean the brake discs with brake cleaner when necessary.

WARNING

Danger of accidents There is no braking effect to start with at the rear brake after installing the rear wheel.

– Actuate the foot brake several times before going on a ride until you can feel a firm pressure point.

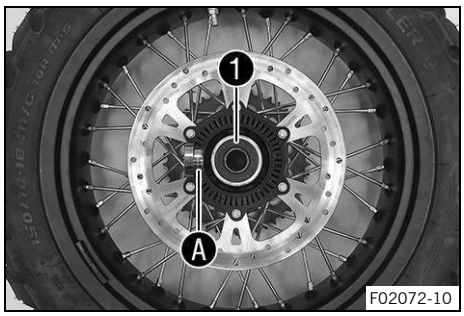

Main work

– Check the rear hub damping rubber pieces. (p. 132)
– Check the wheel bearing for damage and wear.
  » If the wheel bearing is damaged or worn:
    – Change the rear wheel bearing.
– Remove spacer.
– Clean and grease shaft seal ring 1 and contact surface A of the spacer.

  Long-life grease (p. 185)

– Insert a spacer.
– Clean and grease the thread of the wheel spindle and nut.

  Long-life grease (p. 185)

– Clean and lightly grease the wheel spindle.

  Long-life grease (p. 185)

– Clean the contact areas on the brake caliper bracket and link fork.

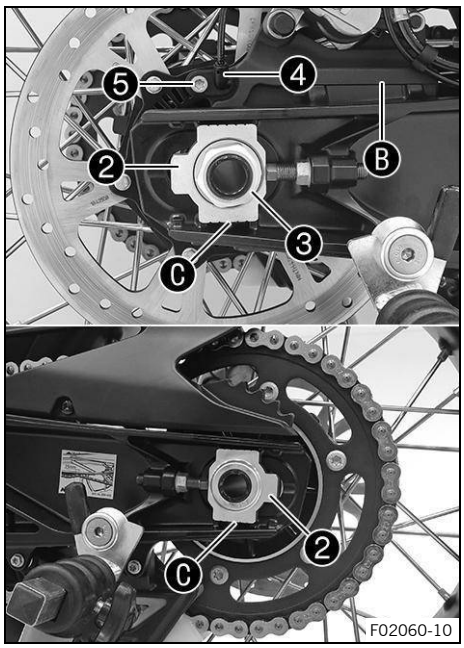

- Engage the thrust bearing of brake caliper bracket B and the link fork.
- Jack up the rear wheel into the link fork, position it, and insert the wheel spindle.
  ✓ The brake pads are positioned correctly.
- Place the chain on the sprocket.
- Position chain tension adjuster 2. Mount nut 3 but do not tighten yet.

Mount the left and right chain adjusters in the same position.

- Make sure that chain adjusters 2 are fitted correctly on the adjusting screws. Tighten nut 3.

In order for the rear wheel to be correctly aligned, the markings on the left and right chain adjusters must be in the same position relative to reference markings C.

Nut, wheel spindle, rear	
M25×1.5	90 Nm (66.4 ft·lb$_f$) Long-life grease

- Position wheel speed sensor 4 in the hole.
- Mount and tighten screw 5.

Screw, rear wheel speed sensor	
M6	6 Nm (4.4 ft·lb$_f$)

- Actuate the brake pedal repeatedly until the brake pads are in contact with the brake disc and a pressure point is achieved.

Reworking

- Check the chain tension. (p. 100)
- Remove the rear of the motorcycle from the lifting gear. (p. 97)

15.5 Checking the rear hub damping rubber pieces

Note

The engine power is transmitted from the rear sprocket to the rear wheel via the 6 damping rubber pieces. These wear out during operation. If the damping rubber pieces are not changed in time, the rear sprocket carrier and the rear hub will be damaged.

Preparatory work

- Raise the motorcycle with the rear lifting gear. (p. 97)
- Remove the rear wheel. (p. 130)

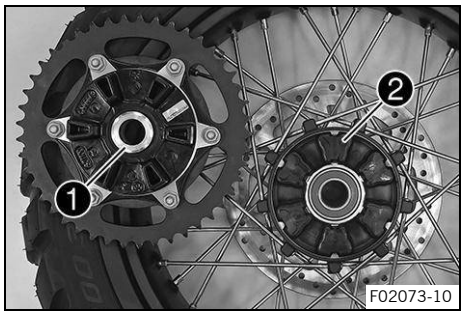

Main work

– Check bearing ❶.
  » If the bearing is damaged or worn:
    – Change the bearing of the rear sprocket carrier.
– Check damping rubber pieces ❷ of the rear hub for damage and wear.
  » If the damping rubber pieces of the rear hub are damaged or worn:
    – Change all the damping rubber pieces of the rear hub.

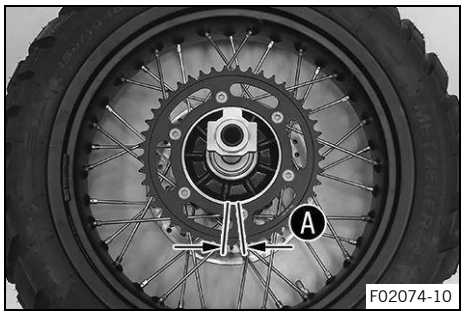

– Lay the rear wheel on a workbench with the rear sprocket facing upwards and insert the wheel spindle in the hub.
– To check play Ⓐ, hold the rear wheel tight and try to turn the rear sprocket with your hand.

Play of damping rubber pieces on rear wheel	≤ 5 mm (≤ 0.20 in)
Measure the play on the outside of the rear sprocket.	

  » If clearance Ⓐ is larger than the specified value:
    – Change all the damping rubber pieces of the rear hub.

Reworking

– Install the rear wheel. (p. 131)
– Check the chain tension. (p. 100)
– Remove the rear of the motorcycle from the lifting gear. (p. 97)

15.6 Checking the tire condition

WARNING

Danger of accidents If a tire bursts while riding, the vehicle becomes uncontrollable.

– Ensure that damaged or worn tires are replaced immediately.

WARNING

Danger of accidents Non-approved or non-recommended tyres and wheels impact the handling characteristic.

– Only use tires and wheels approved and recommended by the vehicle manufacturer with the corresponding speed rating.

WARNING

Danger of accidents New tires have reduced road grip.

The contact surface on new tires is not yet roughened.

– Run in new tires with moderate riding and only gradually increase the lean angle.

Run-in distance	200 km (124.3 mi)

WARNING

Danger of accidents Different tire profiles on the front and rear wheels can make it more difficult to control the vehicle.

– Make sure that only tires of the same tread type are mounted to the front and rear wheel.

Note

Tire type, tire condition, and tire pressure influence the braking and handling characteristics of the vehicle. Worn tires have a negative effect on handling characteristics, especially on wet surfaces.

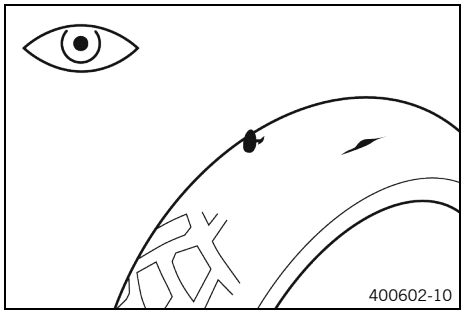

– Check the front and rear tires for cuts, embedded objects, and other damage.
  » If the tires have cuts, run-in objects, or other damage:
    – Change the tires.
– Check the tread depth.

Minimum tread depth	≥ 2 mm (≥ 0.08 in)

Note

Observe the minimum tread depth required by national law.

  » If the tread depth is less than the minimum tread depth:
    – Change the tires.

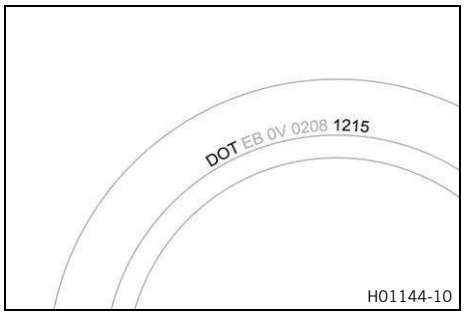

– Check the tire age.

Note

The tire date of manufacture is usually contained in the tire label and is indicated by the last four digits of the **DOT** number. The first two digits indicate the week of manufacture and the last two digits the year of manufacture.

KTM recommends that the tires be changed after 5 years at the latest, regardless of the actual state of wear.

  » If the tires are older than five years:
    – Change the tires.

15.7 Checking the tire pressure

Note

Low tire pressure leads to abnormal wear and the tire overheating.

Correct tire pressure ensures optimal riding comfort and maximum tire service life.

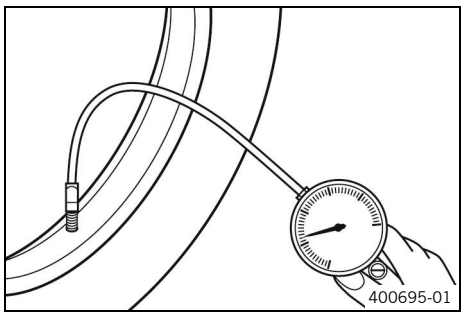

– Remove the protection cap.
– Check the tire pressure when the tires are cold.

Tire pressure when solo	
front	2.4 bar (34.8 psi)
rear	2.4 bar (34.8 psi)

Off-road tire pressure	
front	1.8 bar (26.1 psi)
rear	1.8 bar (26.1 psi)

Tire pressure with full payload / passenger	
front	2.6 bar (37.7 psi)
rear	2.9 bar (42.1 psi)

» If the tire pressure does not meet specifications:
  – Correct tire pressure.
– Mount the protection cap.

15.8 Checking the spoke tension

WARNING

Danger of accidents Incorrectly tensioned spokes impair the handling characteristic and can result in secondary damage.

If the spokes are too tight, they can break due to being overloaded.

Loose spokes can cause lateral or radial run-out in the wheel and other spokes will loosen as a result.

– Check the spoke tension regularly, especially on a new vehicle.

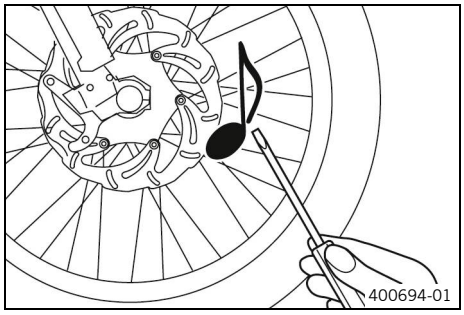

– Briefly tap each spoke with a screwdriver.

You should hear a high-pitched sound.

Note

The frequency of the sound depends on the spoke length and spoke diameter.

If spokes of the same length and diameter vibrate with a different tone, this is an indication that the spoke tensions differ.

» If the spoke tension differs:
  – Correct the spoke tension.

15.9 Tubeless tire system

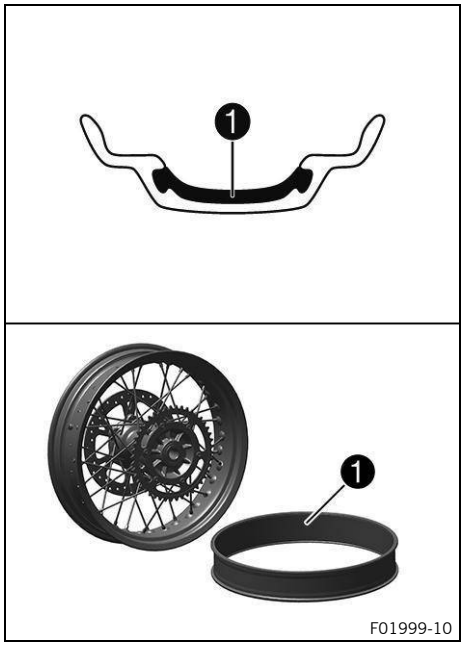

This vehicle uses a tubeless tire system in which a rim seal band ❶ is used instead of the conventional tube.

The advantage of the tubeless system is that there is no danger of a faulty tube. This greatly reduces the risk of a sudden loss in pressure.

The moments of inertia of these wheels are smaller than in conventional spoked wheels with a tube. This results in better handling and riding comfort.

The rigid rim design results in a wire spoke wheel that is almost entirely maintenance-free.

KTM recommends that the rim seal band be changed after 5 years at the latest, regardless of the actual state of wear.

15.10 Using tire repair spray

WARNING

Danger of accidents Incorrect use of tire repair spray will result in the repaired tire losing pressure.

Tire repair spray cannot be used for all types of damage.

- Observe the instructions and specifications of the manufacturer of the tire repair spray.
- After repairing a tire with tire repair spray, ride slowly and carefully.
- Ride no further than the nearest authorized dealer and have the tire replaced.

16.1 daytime running light

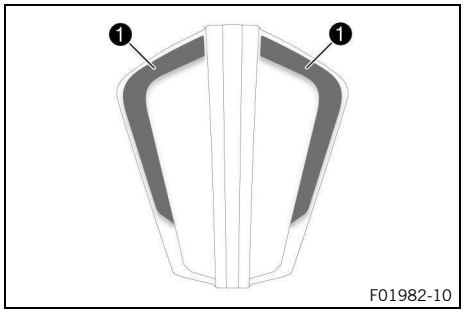

WARNING

Danger of accidents When visibility is poor, the daytime running light is not a substitute for the low beam.

Automatic switching between the daytime running light and low beam may only be partially available when visibility is impaired due to fog, snow or rain.

- Ensure that the appropriate type of lighting is always selected.
- If necessary switch off the daytime running lights using the menu before going on a ride or when stopped so that the low beam is switched on permanently.
- Make sure that the daytime running light is deactivated with the diagnostic tool when the menu item is not available, but the low beam is required.
- Note the legal regulations regarding the daytime running light.

The daytime running light ❶ (**DRL**) is integrated in the main headlight.

The daytime running light ❶ (**DRL**) must only be switched on when visibility conditions are good.

The daytime running light ❶ (**DRL**) is activated on the dashboard.

This is controlled by the ambient light sensor in the combination instrument. When visibility conditions are good, the low beam is switched off and the daytime running light is switched on.

Note

The position light lights up with all types of lighting.

16.2 Removing the 12 V battery

WARNING

Danger of accidents Electronic components and safety devices will be damaged if the 12-V battery is discharged or missing.

If the 12-V battery is discharged or defective, malfunctions in the vehicle electronics can occur, especially when starting.

- Never operate the vehicle with a discharged 12-V battery or without a 12-V battery.

WARNING

Risk of injury Battery acid and battery gases cause chemical burns.

- Keep 12–V batteries out of the reach of children.
- Wear suitable protective clothing and safety glasses.
- Avoid contact with battery acid and battery gases.
- Keep sparks or open flames away from the 12 V battery.
- Only charge 12 V batteries in well-ventilated rooms.
- Rinse the affected area immediately with plenty of water in the event of contact with skin.
- Rinse eyes with water for at least 15 minutes and consult a doctor immediately if battery acid and battery gases get into the eyes.

Preparatory work

– Remove the seat. (p. 99)
– Remove the battery cover. (p. 106)

Main work

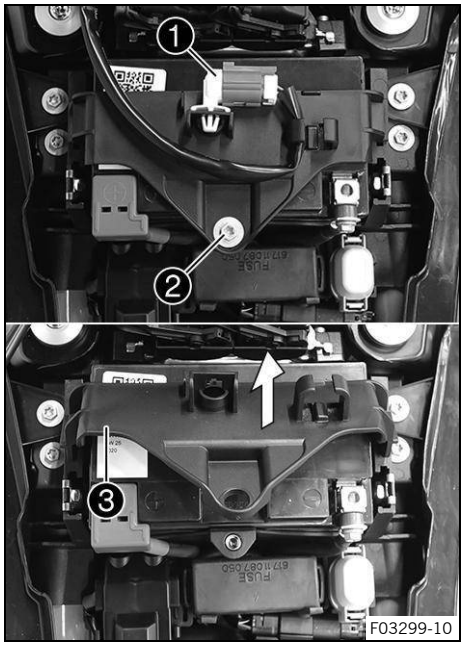

– Pull the diagnostics connector ❶ out of the bracket and hang to the side.
– Remove screw ❷.
– Raise the battery mounting element ❸ at the rear and remove in upward direction.

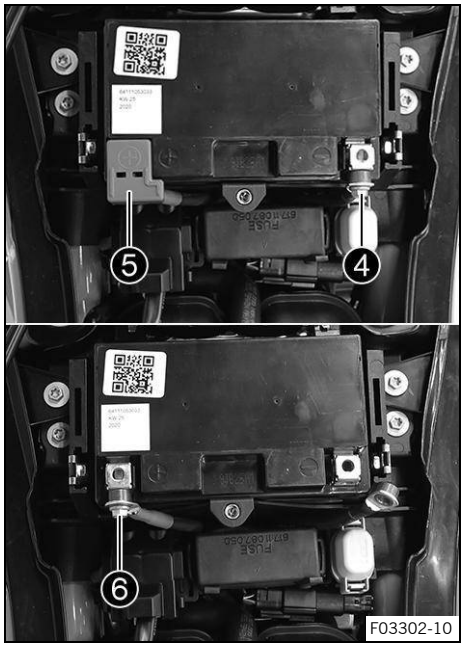

– Disconnect negative cable ❹ from the 12 V battery.
– Remove positive terminal cover ❺.
– Disconnect positive cable ❻ from the 12-V battery.
– Pull the 12-V battery upwards and out of the battery compartment.

16.3 Installing the 12 V battery

WARNING

Danger of accidents Electronic components and safety devices will be damaged if the 12-V battery is discharged or missing.

If the 12-V battery is discharged or defective, malfunctions in the vehicle electronics can occur, especially when starting.

– Never operate the vehicle with a discharged 12-V battery or without a 12-V battery.

WARNING

Risk of injury Battery acid and battery gases cause chemical burns.

– Keep 12–V batteries out of the reach of children.
– Wear suitable protective clothing and safety glasses.
– Avoid contact with battery acid and battery gases.
– Keep sparks or open flames away from the 12 V battery.
– Only charge 12 V batteries in well-ventilated rooms.
– Rinse the affected area immediately with plenty of water in the event of contact with skin.
– Rinse eyes with water for at least 15 minutes and consult a doctor immediately if battery acid and battery gases get into the eyes.

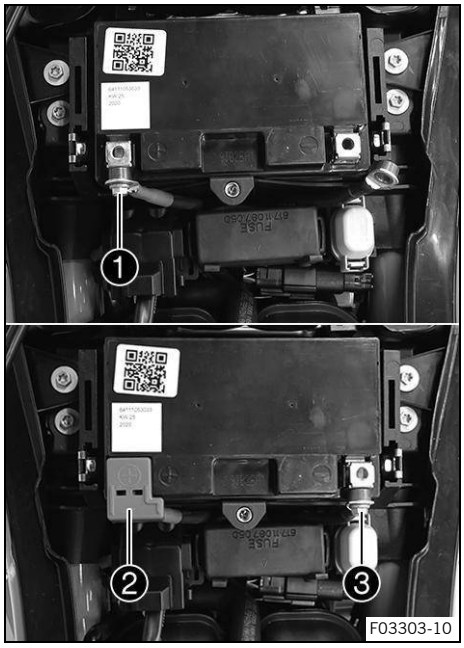

Main work

– Position the 12-V battery in the battery compartment.

12 V battery (HTZ12A-BS)

✓ The battery terminals face opposite the direction of travel.

– Connect positive cable ❶ to the 12 V battery.

Screw, battery terminal	
M6	4.5 Nm (3.32 ft·lb$_f$)

– Mount positive terminal cover ❷.
– Connect negative cable ❸ to the 12 V battery.

Screw, battery terminal	
M6	4.5 Nm (3.32 ft·lb$_f$)

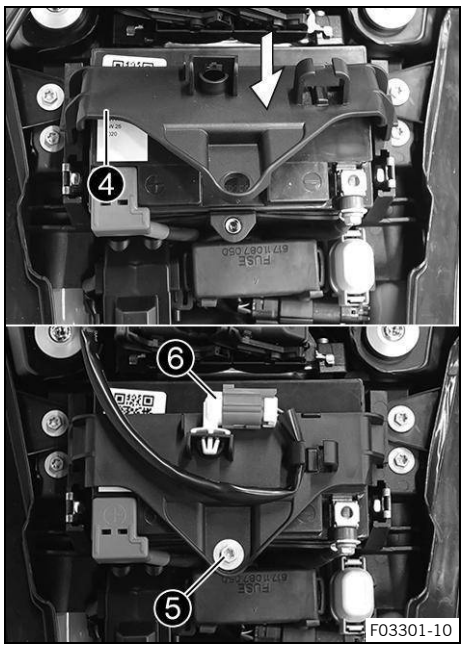

– Hang battery holding bracket ❹ to the left and right in the holding lugs and push downward at the rear.
– Mount and tighten screw ❺.

Screw, battery holding bracket	
M6	4.5 Nm (3.32 ft·lb_f)

– Position the diagnostics connector ❻ in the holder.

Reworking

– Install the battery cover. (p. 107)
– Mount the seat. (p. 99)
– Set the time and date. (p. 64)

16.4 Charging the 12 V battery

WARNING

Risk of injury Battery acid and battery gases cause chemical burns.

– Keep 12–V batteries out of the reach of children.
– Wear suitable protective clothing and safety glasses.
– Avoid contact with battery acid and battery gases.
– Keep sparks or open flames away from the 12 V battery.
– Only charge 12 V batteries in well-ventilated rooms.
– Rinse the affected area immediately with plenty of water in the event of contact with skin.
– Rinse eyes with water for at least 15 minutes and consult a doctor immediately if battery acid and battery gases get into the eyes.

NOTE

Environmental hazard 12–V batteries contain environmentally-hazardous materials.

– Do not dispose of 12–V batteries as household waste.
– Dispose of 12–V batteries at a collection point for used batteries.

NOTE

Environmental hazard Hazardous substances cause environmental damage.

– Dispose of oils, grease, filters, fuel, cleaning agents, brake fluid, etc. correctly and in accordance with the applicable regulations.

Note

Even when there is no load on the 12-V battery, it discharges steadily each day.

The state of charge and the method of charging are very important for the service life of the 12 V battery.

Rapid recharging with a high charging current shortens the service life of the battery.

If the charging current, charging voltage, or charging time is exceeded, electrolyte escapes through the safety valves. This reduces the capacity of the 12-V battery.

If the 12-V battery is left in a discharged state for an extended period, it will become deeply discharged and sulfating occurs, destroying the battery.

The 12 V battery is maintenance-free. The acid level does not have to be checked.

Preparatory work

– Remove the seat. (p. 99)
– Remove the battery cover. (p. 106)

Main work

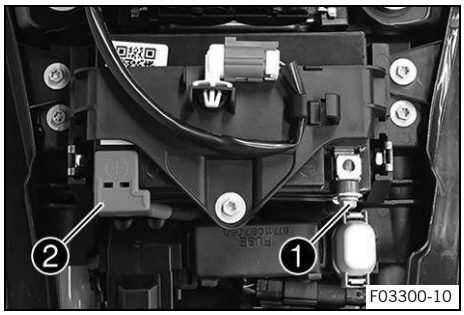

– Disconnect negative cable ❶ from the 12 V battery to avoid damaging the onboard electronics.
– Remove positive terminal cover ❷.

– Connect a charger to the 12 V battery. Connect the battery charger to the mains connection.

Charge the 12-V battery to a maximum of 10% of the capacity specified on the battery housing.

Battery charger (58429074200)

Note

It is impossible to overcharge the 12–V battery using this battery charger.

Note

This battery charger is not suitable for lithium-ion batteries.

– Disconnect the battery charger from the mains connection and the 12-V battery after charging.

The charging current, charging voltage, and charging time must not be exceeded.	
If the 12 V battery is depleted from starting the vehicle repeatedly, the battery must be charged immediately.	
Recharge the 12 V battery regularly when the motorcycle is not being used.	3 months

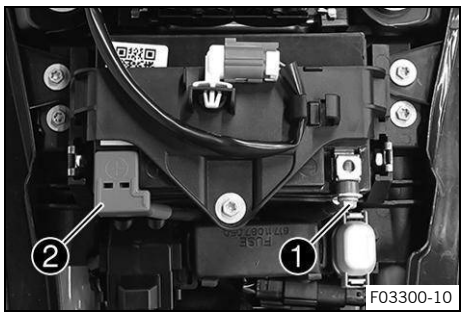

– Mount positive terminal cover ❷.
– Connect negative cable ❶ to the 12 V battery.

Screw, battery terminal	
M6	4.5 Nm (3.32 ft·lb$_f$)

Reworking

– Install the battery cover. (p. 107)
– Mount the seat. (p. 99)
– Set the time and date. (p. 64)

16.5 Changing the main fuse

WARNING

Fire hazard Incorrect fuses overload the electrical system.

– Use only fuses with the prescribed amperage.
– Do not bypass or repair fuses.

Note

The main fuse protects all electrical power loads of the vehicle. The main fuse is under the seat.

Preparatory work

– Remove the seat. (p. 99)

Main work

– Remove protection cap ❶.

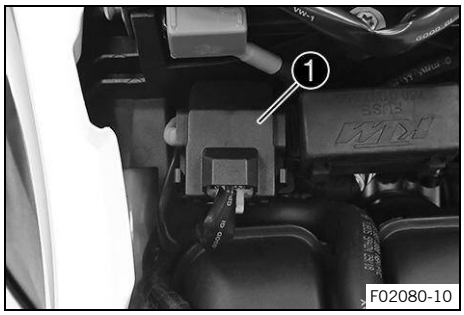

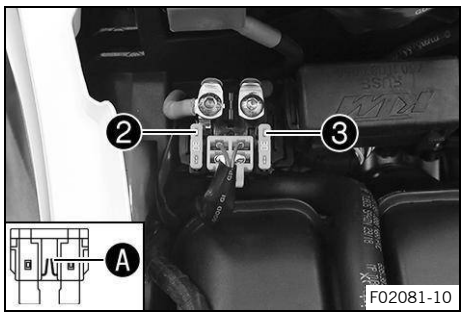

– Remove faulty main fuse ❷.

Note
A faulty fuse has a burned-out fuse wire Ⓐ.
A spare fuse ❸ is located in the starter relay.

– Insert the main fuse.

Fuse (58011109130)

Tip
Insert a new spare fuse into the starter relay to have it available when needed.

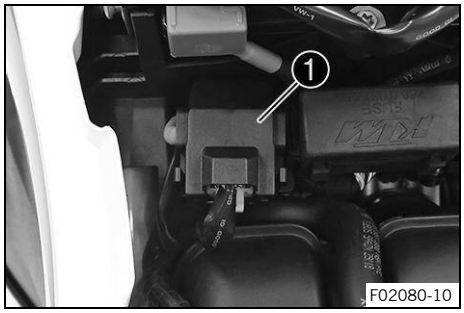

– Mount protection cap ❶.

Reworking

– Mount the seat. (p. 99)
– Set the time and date. (p. 64)

16.6 Changing the ABS fuses

WARNING
Fire hazard Incorrect fuses overload the electrical system.
– Use only fuses with the prescribed amperage.
– Do not bypass or repair fuses.

Note
Two fuses for the ABS are located under the seat. These fuses protect the return pump and the hydraulic unit of the ABS. The third fuse, which protects the ABS control unit, is located in the fuse box.

Preparatory work

– Remove the seat. (p. 99)

Main work

– Select one of the following alternatives.

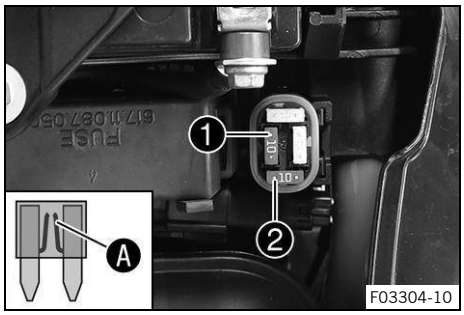

Changing the fuse of the ABS hydraulic unit

– Remove the protection cap and fuse ❶.

Note
A faulty fuse has a burned-out fuse wire Ⓐ.

– Insert the spare fuse with the correct rating.

Fuse (75011088010)

Tip
Insert spare fuse ❷ in the fuse box so that it is available if needed.

– Mount the protection cap.

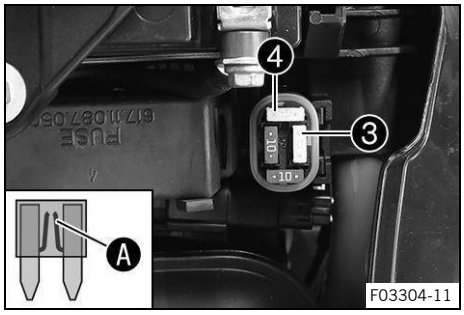

Changing the fuse of the ABS return pump

– Remove the protection cap and fuse ❸.

Note
A faulty fuse has a burned-out fuse wire Ⓐ.

– Insert the spare fuse with the correct rating.

Fuse (75011088025)

Tip
Insert spare fuse ❹ in the fuse box so that it is available if needed.

– Mount the protection cap.

Reworking

– Mount the seat. (p. 99)

16.7 Changing the fuses of individual electrical power consumers

WARNING
Fire hazard Incorrect fuses overload the electrical system.
– Use only fuses with the prescribed amperage.
– Do not bypass or repair fuses.

Note
The fuse box containing the fuses of individual electrical power consumers is located under the seat.

Preparatory work

– Remove the seat. (p. 99)

Main work

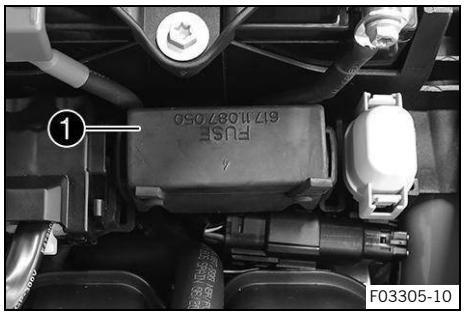

– Open fuse box cover ❶.

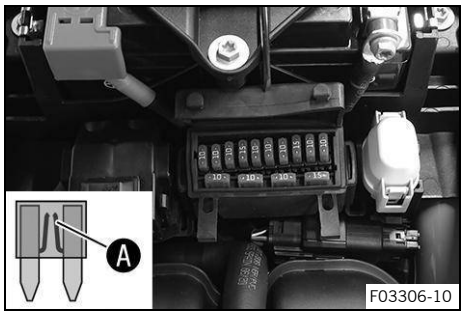

– Remove the faulty fuse.

Fuse **1** - 10 A - ignition, alarm system (optional)
Fuse **2** - 10 A - ignition, engine control unit, electronic fuel injection, fuel vapor retention system, lambda sensor, immobilizer
Fuse **3** - 10 A - fuel pump
Fuse **4** - 15 A - radiator fan
Fuse **5** - 10 A - horn, combination instrument, brake light
Fuse **6** - 10 A - high beam, low beam, position light, tail light, license plate lamp
Fuse **7** - 10 A - ACC1
Fuse **8** - 15 A - ACC2, HCU (optional)
Fuse **9** - 10 A - ABS control unit, diagnostics connector, 5D sensor, TPMS (function optional)
Fuse **10** - 10 A - light control unit
Fuse **SPARE** - 10 A – spare fuses
Fuse **SPARE** - 15 A – spare fuses

Note
A faulty fuse has a burned-out fuse wire Ⓐ.

– Insert the spare fuse with the correct rating.

Fuse (75011088010)
Fuse (75011088015)

Tip
Put a spare fuse in the fuse box so that it is available if needed.

– Check the function of the electrical power consumers.
– Close the fuse box cover.

Reworking

– Mount the seat. (p. 99)

16.8 Checking the headlight setting

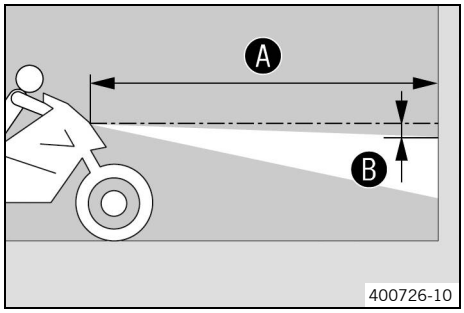

– Park the vehicle on a horizontal surface in front of a light-colored wall and make a mark at the height of the center of the low beam headlight.
– Make another mark at a distance B under the first marking.

Distance B	5 cm (2.0 in)

– Position the vehicle upright at distance A from the wall and switch on the low beam.

Distance A	5 m (16 ft – 5 in)

– Get on the motorcycle, together with any luggage or passenger.
– Check the headlight adjustment.

The light-dark boundary must lie exactly on the lower marking when the motorcycle is ready to operate with the rider mounted along with any luggage and a passenger if applicable.

» If the boundary between light and dark does not meet specifications:
  – Adjust headlight range. (p. 146)

16.9 Adjusting the headlight range

Preparatory work

– Check the headlight setting. (p. 146)

Main work

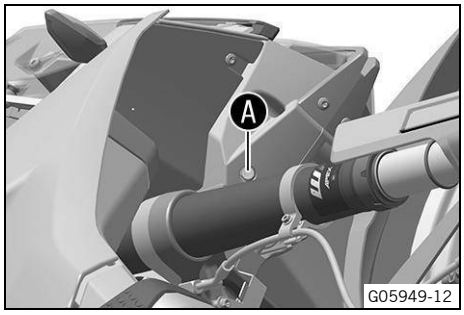

– Turn adjusting screw A to adjust the headlight range.

Note
Turn clockwise to reduce the headlight range; turn counterclockwise to increase the headlight range.
If you have a load, you may have to correct the headlight range.

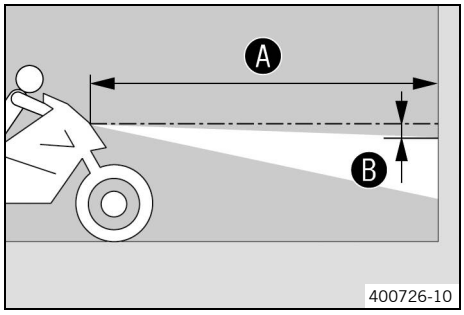

– Set the headlight to marking B.

The light-dark boundary must lie exactly on the lower marking B when the motorcycle is ready to operate with the rider mounted along with any luggage and a passenger if applicable.

16.10 Diagnostic connector

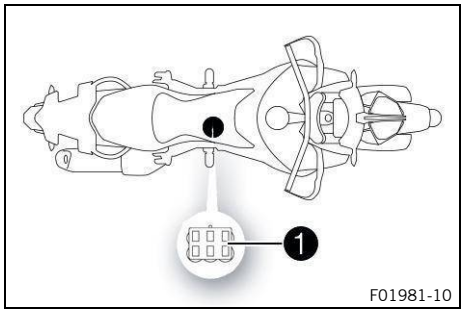

Diagnostics connector ❶ is located under the battery cover.

16.11 Front ACC1 and ACC2

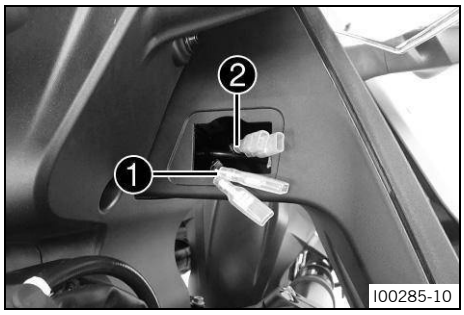

Installation location

- The front power supplies ACC1 ❶ and ACC2 ❷ are located in the right mask support.

Note
The front power supplies ACC1 and ACC2 can be accessed behind the cover of the right mask support.

16.12 Rear ACC1 and ACC2

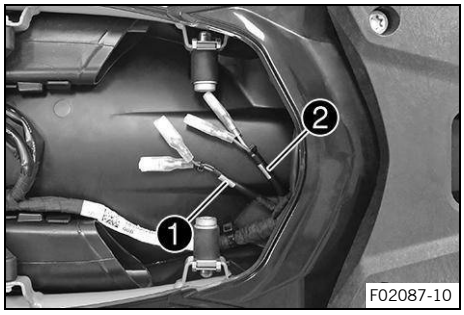

Installation location

- Power supplies ACC1 ❶ and ACC2 ❷ rear are located under the seat.

17.1 Cooling system

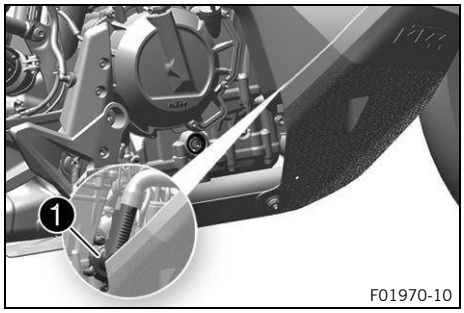

Water pump ❶ in the engine circulates the coolant.
The pressure resulting from the warming of the cooling system is regulated by a valve in radiator cap ❷. Heat expansion causes excess coolant to flow into compensating tank ❸. When the temperature falls, this surplus coolant is sucked back into the cooling system. This ensures that operating the vehicle at the specified coolant temperature will not result in a risk of malfunctions.

115 °C (239.0 °F)

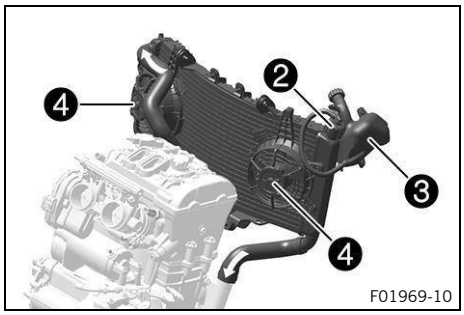

The coolant is cooled by the air stream and two radiator fans ❹, which are activated at high temperature.
The lower the vehicle speed, the lower the cooling effect. Dirty cooling fins also reduce the cooling effect.

17.2 Checking the coolant level in the compensating tank

WARNING
Health hazard Coolant is harmful to health.
- Keep coolant out of the reach of children.
- Do not allow coolant to come into contact with skin, eyes, or clothing.
- Consult a doctor immediately if coolant has been ingested.
- Rinse the affected area immediately with plenty of water in the event of contact with skin.
- Rinse eyes thoroughly with water and consult a doctor immediately if coolant comes into contact with eyes.
- If coolant spills on to your clothing, change the clothing.
- Store coolant properly in a suitable container and keep out of the reach of children.

WARNING
Danger of scalding The coolant heats up and is under high pressure when the vehicle is operated.
- Do not open the radiator, the radiator hoses, or other cooling system components if the engine or the cooling system are at operating temperature.
- Allow the cooling system and the engine to cool down before you open the radiator, the radiator hoses, or other components of the cooling system.
- In the event of scalding, rinse the area affected immediately with lukewarm water.

Condition: The engine is cold, Radiator is completely full

- Park the motorcycle on a horizontal surface.

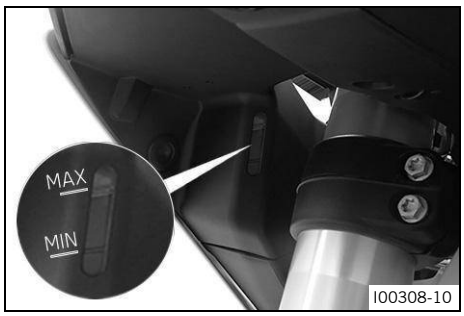

– Check the coolant level in the compensating tank.

The coolant level must be between **MIN** and **MAX**.

» If there is no coolant in the compensating tank:
  – Check the transmission and cooling system for leaks.

Do not start the motorcycle.

  – Fill/bleed the cooling system.

» If the coolant level in the reservoir is not correct, but the reservoir is not yet empty:
  – Correct the coolant level in the compensating tank. (p. 149)

17.3 Correcting the coolant level in the compensating tank

WARNING

Health hazard Coolant is harmful to health.

– Keep coolant out of the reach of children.
– Do not allow coolant to come into contact with skin, eyes, or clothing.
– Consult a doctor immediately if coolant has been ingested.
– Rinse the affected area immediately with plenty of water in the event of contact with skin.
– Rinse eyes thoroughly with water and consult a doctor immediately if coolant comes into contact with eyes.
– If coolant spills on to your clothing, change the clothing.
– Store coolant properly in a suitable container and keep out of the reach of children.

WARNING

Danger of scalding The coolant heats up and is under high pressure when the vehicle is operated.

– Do not open the radiator, the radiator hoses, or other cooling system components if the engine or the cooling system are at operating temperature.
– Allow the cooling system and the engine to cool down before you open the radiator, the radiator hoses, or other components of the cooling system.
– In the event of scalding, rinse the area affected immediately with lukewarm water.

Condition: The engine is cold, Radiator is completely full

Preparatory work

– Check the coolant level in the compensating tank. (p. 148)

Main work

– Remove compensating tank cover 1.

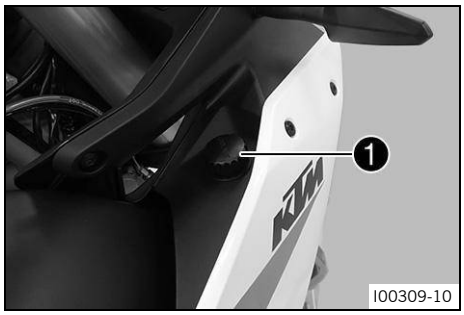

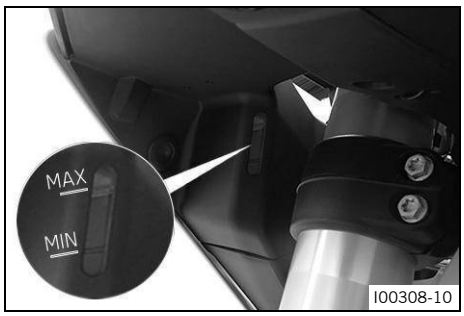

– Add coolant until the coolant reaches the specified level.

The coolant level must be between **MIN** and **MAX**.

coolant	
Coolant (p. 186) Antifreeze protection to at least: −25 °C (−13.0 °F)	1.60 l (0.423 liq. gal_{US})

– Mount cover ❶ of the compensating tank.

Compensating tank cover	
	1.1 Nm (0.81 $ft{\cdot}lb_f$)

18.1 Ride Mode

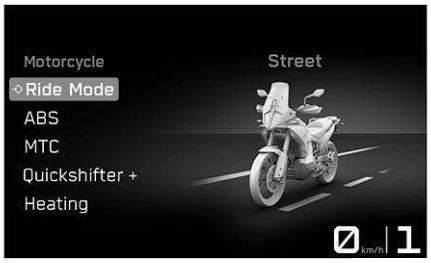

I00212-01

Condition	Meaning
Street	Homologated performance with balanced response; the motorcycle traction control allows normal slip on the rear wheel.
Rain	Reduced homologated performance with soft response for improved rideability on surfaces with low road grip; the motorcycle traction control allows very little slip on the rear wheel.
Offroad	Reduced homologated performance for better rideability on unpaved roads; the motorcycle traction control allows high slip on the rear wheel.
Rally (optional)	Homologated performance and extremely direct response. The motorcycle traction control and the characteristics of the throttle response can be set individually.

WARNING

Danger of accidents An incorrectly selected ride mode makes it more difficult to control the vehicle.

The riding modes are each only suitable for certain conditions.

– Always select a riding mode that suits the surface on which you are riding, the weather and the riding situation.

Various vehicle tunings can be selected in the dashboard in the **Ride Mode** submenu: **Street**, **Rain**, **Offroad** and **Rally** (optional).

The most recently selected ride mode appears on the display.

The ride mode can also be changed while riding with the throttle grip closed.

18.2 Motorcycle traction control

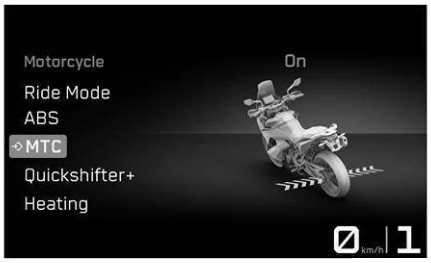

I00214-01

The motorcycle traction control (**MTC**) lowers the engine torque in case of loss of traction in the rear wheel. Depending on the ride mode (p. 151), different amounts of slip are allowed when traction control is activated.

Note

When motorcycle traction control is switched off, the rear wheel may spin during strong acceleration and on surfaces with low grip, resulting in a risk of falling.

After the ignition is switched on, motorcycle traction control is enabled again.

In the combination instrument, the motorcycle traction control can be switched on or off via the **MTC** submenu (optional).

Note

When the motorcycle traction control is active, the TC indicator lamp flashes.

When motorcycle traction control is switched off, the TC indicator lamp lights up.

18.3 slip adjustment (optional)

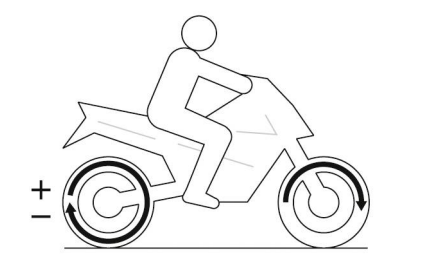

402790-01

The spin adjuster is a motorcycle traction control function.

The slip adjustment allows the motorcycle traction control to be tuned through nine levels to the desired characteristic map.

Level 1 allows maximum slip on the rear wheel, and level 9 allows the minimum.

The slip adjustment can be set while riding with a closed menu using the **UP** or **DOWN** button.

Note

The slip adjustment is only available in **Rally** ride mode (optional).

18.4 Throttle Response (optional)

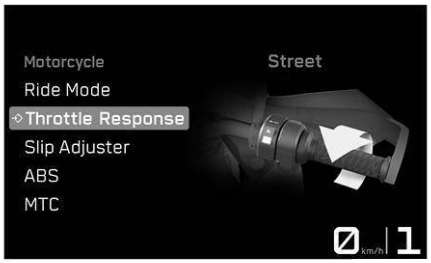

I00219-01

In the combination instrument the characteristics of the throttle response can be adjusted via the **Throttle response** submenu.

The **Throttle response** can also be set while riding with a closed throttle grip.

Note

Throttle response is only available in ride mode **Rally** (optional).

Condition	Meaning
Street	Balanced response.
Offroad	Very direct response.
Rally	Extremely direct response

19.1 Checking the engine oil level

Condition: Engine is at operating temperature

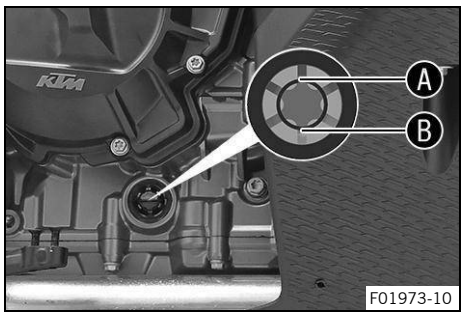

– Stand the motorcycle upright on a level surface.
– Check the engine oil level.

After switching off the engine, wait one minute before checking the level.
The engine oil must be between marking Ⓐ and marking Ⓑ of the oil level viewer.

» If the engine oil level is below the marking Ⓑ:
  – Add engine oil. (p. 155)
» If the engine oil level is above the marking Ⓐ:
  – Correct engine oil level.

19.2 Changing the engine oil and oil filter, cleaning the oil screens

WARNING

Danger of scalding Engine and gear oil heat up when the motorcycle is operated.
– Wear suitable protective clothing and safety gloves.
– In the event of scalding, rinse the area affected immediately with lukewarm water.

NOTE

Environmental hazard Hazardous substances cause environmental damage.
– Dispose of oils, grease, filters, fuel, cleaning agents, brake fluid, etc. correctly and in accordance with the applicable regulations.

Condition: Engine is at operating temperature

Preparatory work

– Remove the skid plate. (p. 115)

Main work

– Rest the motorcycle on its side stand on a horizontal surface.
– Position an appropriate container under the engine.
– Remove filler plug ❶ with the O-ring.

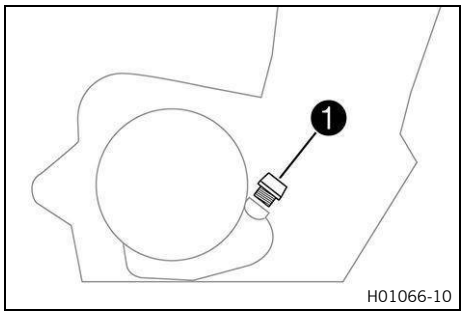

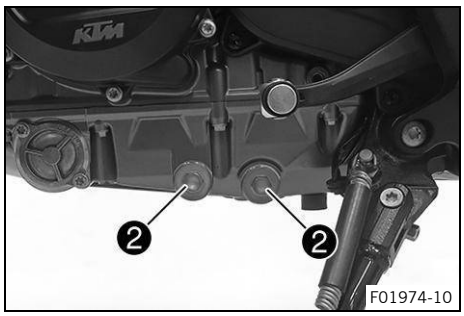

– Remove oil drain plugs ❷ along with the magnets, the O-rings, and the oil screens.

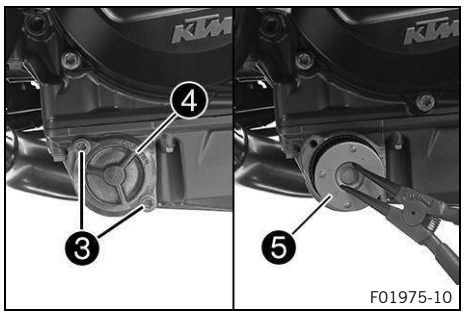

– Remove screws ❸. Take off oil filter cover ❹ with the O-ring.
– Pull oil filter ❺ out of the oil filter housing.

Lock ring plier (51012011000)

– Allow the engine oil to drain completely.
– Thoroughly clean the parts and the sealing surfaces.

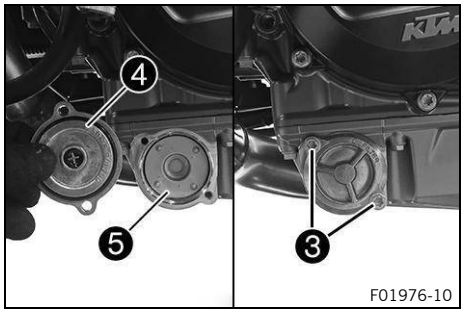

– Insert new oil filter ❺.

Only insert the oil filter by hand.

– Oil the new O-ring of the oil filter cover. Position oil filter cover ❹.
– Mount and tighten screws ❸.

Screw, oil filter cover	
M5	6 Nm (4.4 ft·lb$_f$)

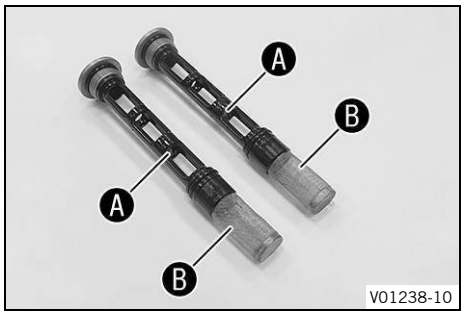

– Thoroughly clean magnets Ⓐ and oil screens Ⓑ of the oil drain plugs.

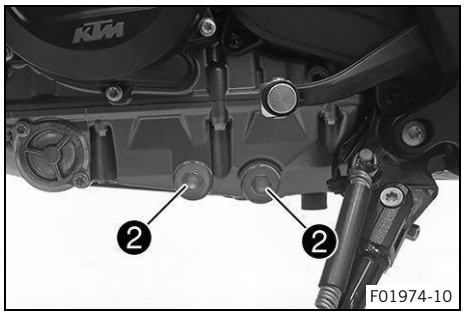

– Mount and tighten oil drain plugs ❷ with magnets, O-rings, and oil screens.

Plug, oil screen	
M20×1.5	20 Nm (14.8 ft·lb$_f$)

– Fill up with engine oil at the clutch cover.

engine oil	
engine oil (SAE 10W/50) (p. 185) fully synthetic	2.8 l (0.74 liq. gal$_{US}$)

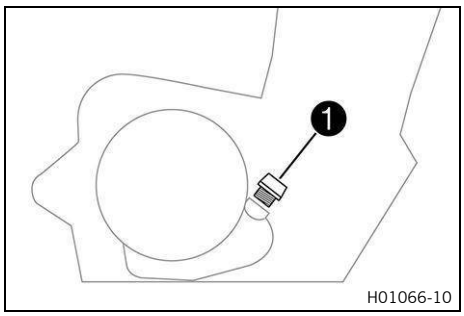

– Mount and tighten filler plug ❶ with the O-ring.

DANGER
Danger of poisoning Exhaust gases are toxic and inhaling them may result in unconsciousness and death.
– Always ensure that there is sufficient ventilation when running the engine.
– Use suitable exhaust extraction when starting or running the engine in an enclosed space.

– Start the engine and check it for leaks.

Reworking
– Check the engine oil level. (p. 153)
– Install the skid plate. (p. 116)

19.3 Adding engine oil

Note
Too little engine oil or poor-quality engine oil will result in premature wear of the engine.

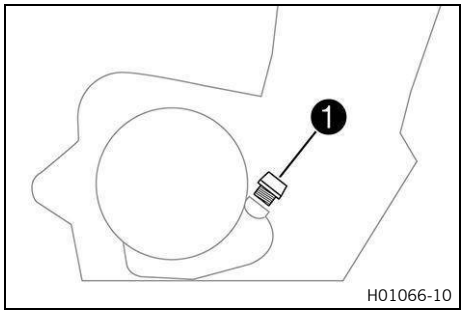

Main work
– Remove oil plug ❶ with O-ring.
– Fill engine oil to the middle of the level viewer.

engine oil	
engine oil (SAE 10W/50) (p. 185) fully synthetic	2.8 l (0.74 liq. gal_{US})

Note
In order to achieve optimal engine oil performance, it is not advisable to mix different engine oils.
KTM recommends changing the engine oil if necessary.

– Mount and tighten oil plug ❶ with O-ring.

DANGER
Danger of poisoning Exhaust gases are toxic and inhaling them may result in unconsciousness and death.
– Always ensure that there is sufficient ventilation when running the engine.
– Use suitable exhaust extraction when starting or running the engine in an enclosed space.

– Start the engine and check it for leaks.

Reworking

– Check the engine oil level. (p. 153)

19.4 Checking the free travel of the clutch lever

NOTE

Clutch damage If there is no free travel by the clutch lever, the clutch will slip.

– Check the free travel of the clutch lever each time before using the vehicle.
– Adjust the free travel of the clutch lever when necessary in accordance with the specification.

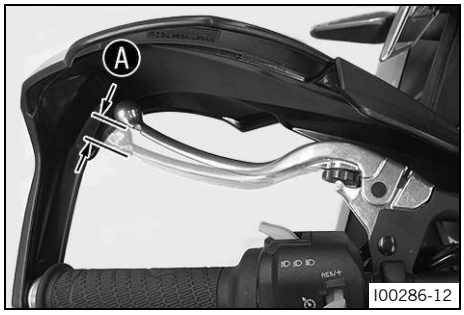

– Check the clutch lever for smooth operation.
– Move the handlebar to the straight-ahead position.
– Pull the clutch lever until resistance is perceptible, and determine the free travel A.

Free travel A of clutch lever	5 mm (0.20 in)

» If the free travel of the clutch lever does not meet specifications:
  – Set the free travel of the clutch lever. (p. 156)

– Move the handlebar back and forth over the entire steering range.

The free travel of the clutch lever must not change.

» If the free travel of the clutch lever changes:
  – Check the routing of the clutch cable.

19.5 Adjusting the free travel of the clutch lever

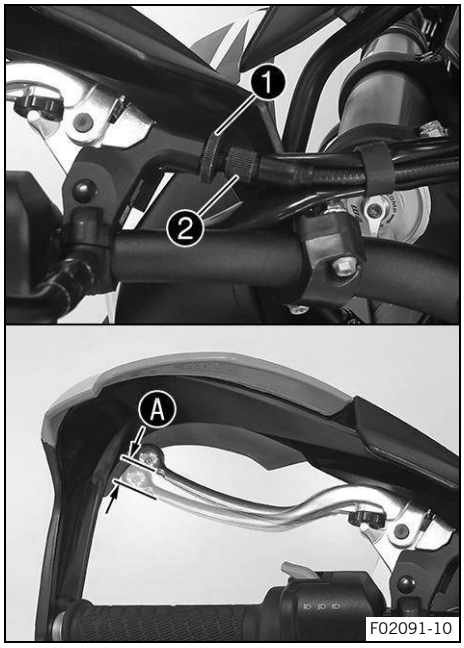

– Move the handlebar to the straight-ahead position.
– Loosen lock nut 1.
– Adjust the free travel A by turning adjusting screw 2.

Free travel A of clutch lever	5 mm (0.20 in)

– Tighten lock nut 1.

20.1 Cleaning the motorcycle

NOTE

Material damage Components can be damaged or destroyed if a high-pressure cleaner is used incorrectly.

The high pressure forces water into the electrical components, socket connectors, clutch cables, and bearings, etc.

Too high a pressure can cause malfunctions and destroy components.

– Do not direct the water jet directly on to electrical components, socket connectors, clutch cables, or bearings.
– Maintain a minimum distance between the nozzle of the high-pressure cleaner and the component.

Minimum distance	60 cm (23.6 in)

NOTE

Environmental hazard Hazardous substances cause environmental damage.

– Dispose of oils, grease, filters, fuel, cleaning agents, brake fluid, etc. correctly and in accordance with the applicable regulations.

Note

Clean the motorcycle regularly to maintain its value and appearance over a long period.

Avoid direct sunshine when cleaning the motorcycle.

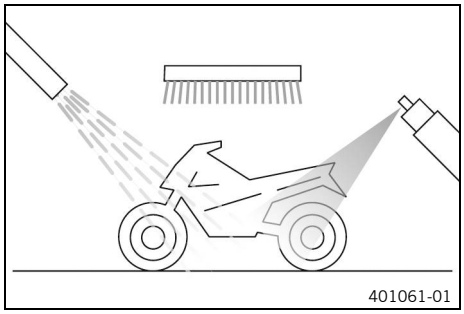

– Seal the exhaust system to prevent water from entering into it.
– Remove loose dirt first with a soft jet of water.
– Spray the heavily soiled parts with a standard commercial motorcycle cleaner and clean using a brush.

Never apply motorcycle cleaner to a dry vehicle; always rinse the vehicle with water first.

Environmentally neutral universal cleaning agent
(p. 187)

Note

Use warm water containing standard motorcycle cleaner and a soft sponge.

If the vehicle was driven in road salt, clean it with cold water. Warm water enhances the corrosive effects of salt.

– After rinsing the motorcycle with a gentle spray of water, allow it to dry thoroughly.
– Remove the cover from the exhaust system.

WARNING

Danger of accidents Moisture and dirt impair the brake system.

– Brake carefully several times to dry out and remove dirt from the brake pads and the brake discs.

– After cleaning, ride the vehicle a short distance until the engine warms up.

Note
The heat produced causes water to evaporate at inaccessible locations in the engine and on the brake system.

– After the motorcycle has cooled off, lubricate all moving parts and pivot points.

WARNING
Danger of accidents Oil, grease or wax on the brake discs reduces the brake action.
– Always keep the brake discs free of oil, fat and wax.
– Clean the brake discs with brake cleaner when necessary.

– Clean the chain. (p. 99)
– Treat bare metal (except for brake discs and the exhaust system) with an anticorrosive.

Preserving materials (p. 187)

– Treat all painted parts with a mild paint care product.

Do not polish parts that were matte when delivered as this would strongly impair the material quality.

Shine spray with beading effect (p. 187)

– Treat the plastic parts and powder-coated parts with a mild cleaning agent and care product.

Cleaning agents for plastics, glass, lacquers, metals, windshields and visors (p. 187)

– Oil the ignition and steering lock, tank lock, and seat lock.

Universal oil spray (p. 185)

20.2 Checks and maintenance steps for winter operation

WARNING
Danger of accidents Salt on the roads impairs the brake system.
– Brake carefully several times to remove salt from the brake linings and the brake discs.

WARNING
Danger of accidents Oil, grease or wax on the brake discs reduces the brake action.
– Always keep the brake discs free of oil, fat and wax.
– Clean the brake discs with brake cleaner when necessary.

Note
If you use the motorcycle in winter, salt can be expected on the roads. You should therefore take precautions against aggressive road salt.

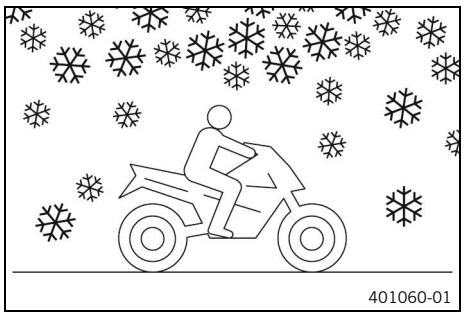

– Clean the motorcycle. (p. 157)
– Clean brake system.

After **EVERY** trip on salted roads, thoroughly clean the brake calipers and brake linings, after they have cooled down and without removing them, with cold water and dry them carefully.
After riding on salted roads, thoroughly clean the motorcycle with cold water and dry it well.

Note
Warm water enhances the corrosive effects of salt.

– Treat the engine, swingarm, and all other bare or zinc-plated parts (except the brake discs) with a wax-based anticorrosive.

Corrosion inhibitor must not come in contact with the brake discs as this would greatly reduce the braking force.

– Clean the chain. (p. 99)

21.1 Storage

Note

If the vehicle will not be ridden for an extended period, additional steps are recommended.

Before storing the motorcycle, check all parts for function and wear. If service, repairs, or replacements are necessary, you should do this during the storage period (less overload of the authorized partner). This allows you to avoid long waiting periods when the next season starts.

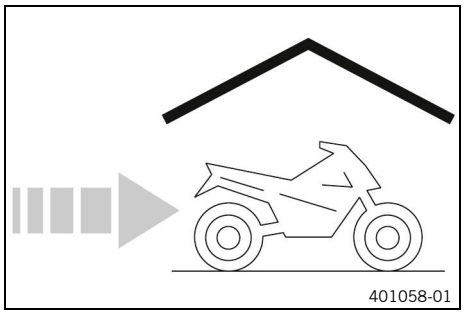

– When refueling for the last time before taking the motorcycle out of service, add fuel additive.

Fuel additive (p. 184)

– Refuel. (p. 87)

Tip

Fill the fuel tank completely as specified, using fuel with the lowest possible ethanol content.

– Clean the motorcycle. (p. 157)
– Change the engine oil and the oil filter, clean the oil screens. (p. 153)
– Check the coolant fill level and antifreeze.
– Check the tire pressure. (p. 134)
– Remove the 12 V battery. (p. 137)

Storage temperature of the 12 V battery without direct sunlight	0 °C … 35 °C (32.0 °F … 95.0 °F)

– Charge the 12 V battery. (p. 140)
– Store the vehicle in a dry location that is not subject to large fluctuations in temperature.

Cover the motorcycle with a tarp or cover that is permeable to air.
Do not use non-porous materials because they prevent humidity from escaping and thus cause corrosion.

Note

Avoid running the engine of a motorcycle in storage for a short time only. Since the engine cannot warm up properly, the water vapor produced during combustion condenses and causes valves and the exhaust system to rust.

21.2 Preparing for use after storage

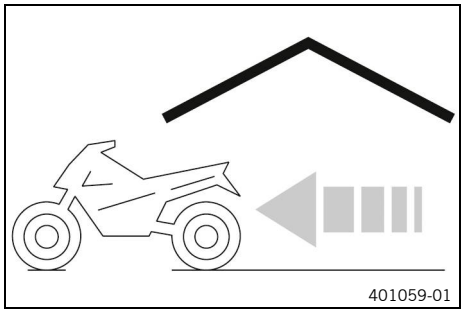

- Take the motorcycle off the front lifting gear. (p. 98)
- Remove the rear of the motorcycle from the lifting gear. (p. 97)
- Install the 12 V battery. (p. 139)
- Set the time and date. (p. 64)
- Perform checks and maintenance measures when preparing for use. (p. 79)
- Take a test ride.

22.1 troubleshooting

Cause	Finding	Remedy
The engine does not turn over when the start button is actuated	Operating error 12 V battery discharged Fuse **1**, **2** or **3** blown Main fuse blown Combination switch cable damaged No ground connection present on the starter motor	– Carry out the starting procedure. (p. 79) – Charge the 12 V battery. (p. 140) – Check the open-circuit current. – Change the fuses of individual electrical power consumers. (p. 144) – Change the main fuse. (p. 142) – Check the combination switch cable for damage. – Check the ground connection.
The engine only turns over if the clutch lever is pulled	The vehicle is in gear The vehicle is in gear and the side stand is folded out	– Shift the transmission into Leerlaufstellung N. – Shift the transmission into Leerlaufstellung N.
The engine turns but does not start	Operating error Lack of fuel Fuse **3** blown Quick-lock coupling not joined Fuel taps on the fuel tank cover closed Malfunction in the electronic fuel injection Throttle opened while starting	– Carry out the starting procedure. (p. 79) – Refuel. (p. 87) – Change the fuses of individual electrical power consumers. (p. 144) – Join quick-lock couplings. – Open the fuel taps on the fuel tank cover. – Read out the fault memory using the diagnostics tool. – When starting, **DO NOT** open the throttle. – Carry out the starting procedure. (p. 79)
Engine has too little power	Air filter is very dirty Fuel screen is very dirty Fuel filter is very dirty Malfunction in the electronic fuel injection	– Remove the air filter. – Install the air filter. – Change the fuel screen. – Check the fuel pressure. – Read out the fault memory using the diagnostics tool.
Engine overheats	Too little coolant in cooling system Radiator fins very dirty Foam formation in the cooling system Buckled or damaged radiator hose Thermostat defective Fuse **4** blown Defect in radiator fan system	– Check the transmission and cooling system for leaks. – Check the coolant level in the compensating tank. (p. 148) – Clean the radiator fins. – Drain the coolant. – Fill/bleed the cooling system. – Change the radiator hose. – Check the thermostat. – Change the fuses of individual electrical power consumers. (p. 144)

Cause	Finding	Remedy
		– Check the radiator fan system.
The malfunction indicator light lights up or flashes	Malfunction in the electronic fuel injection	– Read out the fault memory using the diagnostics tool.
N The idling speed indicator lamp does not light up when the transmission is in neutral	Gear position sensor not programmed	– Read out the fault memory using the diagnostics tool.
The engine dies during the trip	Lack of fuel Fuse **1**, **2** or **3** blown	– Refuel. (p. 87) – Change the fuses of individual electrical power consumers. (p. 144)
The ABS warning light lights up	ABS fuse blown Large difference in wheel speeds of the front and rear wheels Wheel speed sensor wheel bent or damaged Wheel speed sensor damaged Malfunction in ABS	– Change the ABS fuses. (p. 143) – Stop the vehicle, switch off the ignition, and start it again. – Check the wheel speed sensor wheel for damage. – Check the wheel speed sensor for damage. – Read out the ABS fault memory using the diagnostic tool.
High oil consumption	Engine vent hose bent The engine oil level is too high The engine oil is too thin (low viscosity)	– Route the vent hose without bends or change it if necessary. – Check the engine oil level. (p. 153) – Change the engine oil and the oil filter, clean the oil screens. (p. 153)
Headlight and position light are not functioning	Fuse **6** blown	– Change the fuses of individual electrical power consumers. (p. 144)
Turn signal, brake light, and horn are not functional	Fuse **5** blown	– Change the fuses of individual electrical power consumers. (p. 144)
Time is not displayed or not correctly displayed	Fuse **1** blown	– Change the fuses of individual electrical power consumers. (p. 144)
12 V battery discharged	Ignition was not switched off when vehicle was parked The 12-V battery is not being charged by the alternator	– Charge the 12 V battery. (p. 140) – Check the charging voltage.
The dashboard shows nothing on the display	Fuse **1** or **2** blown	– Change the fuses of individual electrical power consumers. (p. 144) – Set the time and date. (p. 64)

23.1 Engine

23.1.1 Technical data - engine

Design	2-cylinder 4-stroke in-line engine, water-cooled
Displacement	890 cm³ (54.31 in³)
Stroke	68.8 mm (2.709 in)
Bore	90.7 mm (3.571 in)
Compression ratio	13.5:1
Control	DOHC, 4 valves per cylinder controlled via cam lever, chain drive
Valve diameter, intake	37 mm (1.46 in)
Valve diameter, exhaust	30 mm (1.18 in)
Valve clearance, cold	
Intake at: 20 °C (68.0 °F)	0.10 mm … 0.15 mm (0.0039 in … 0.0059 in)
Exhaust at: 20 °C (68.0 °F)	0.15 mm … 0.20 mm (0.0059 in … 0.0079 in)
Crankshaft bearing	Plain bearing
Big (bottom) end bearing	Plain bearing
Piston	Forged light alloy
Piston rings	1 compression ring, 1 lower compression ring, 1 oil ring with spring expander
Engine lubrication	Pressure circulation lubrication with 2 trochoidal pumps
Primary transmission	39:75
Clutch	Slipper clutch in oil bath/mechanically operated
Transmission	6 speed transmission, claw shift
Gear ratios	
1st gear	13:37
2nd gear	17:34
3rd gear	20:31
4th gear	22:28
5th gear	24:26
6th gear	23:22
Mixture formation	Electronic fuel injection
Ignition system	Contactless controlled fully electronic ignition with digital ignition adjustment
Alternator	• 14 V • 406 W (0.544 hp)
Spark plug	NGK LMAR9AI–10

Plug gap of spark plug	1.0 mm (0.039 in)
Cooling	Liquid cooling, permanent circulation of coolant by water pump
Idle speed	1,550 rpm … 1,650 rpm (25.83 Hz … 27.50 Hz)
Starting aid	Starter motor

23.1.1.1 Coolant capacity

coolant	
Coolant (p. 186) Antifreeze protection to at least: −25 °C (−13.0 °F)	1.60 l (0.423 liq. gal_{US})

23.1.1.2 Filling quantity of engine oil

engine oil	
engine oil (SAE 10W/50) (p. 185) fully synthetic	2.8 l (0.74 liq. gal_{US})

23.2 Chassis

23.2.1 Technical data - chassis

Frame	Lattice frame made of chrome molybdenum steel tubing, powder-coated
Fork	**WP XPLOR PRO**
Shock absorber	**WP XPLOR PRO**
Suspension travel:	
front	270 mm (10.63 in)
rear	270 mm (10.63 in)
Brake system	
front	Double disc brake with radially mounted four-piston brake calipers, floating brake discs
rear	Single disc brake with dual-piston brake caliper, floating brake disc
Brake discs - diameter	
front	320 mm (12.60 in)
rear	260 mm (10.24 in)
Brake disc wear limit	
front	4.5 mm (0.177 in)
rear	4.5 mm (0.177 in)
Tire pressure when solo	

front	2.4 bar (34.8 psi)
rear	2.4 bar (34.8 psi)
Tire pressure with full payload / passenger	
front	2.6 bar (37.7 psi)
rear	2.9 bar (42.1 psi)
Final drive	16:45
Chain	5/8 x 1/4” (520) X–ring
Steering head angle	63.7° (1.112 rad)
Wheelbase	1,535 mm (60.43 in)
Seat Height unloaded	945.5 mm (37.224 in)
Ground clearance unloaded	298 mm (11.73 in)
Weight without fuel approx.	199 kg (438.7 lb)
Maximum permissible front axle load	175 kg (385.8 lb)
Maximum permissible rear axle load	275 kg (606.3 lb)
Maximum permissible total weight	450 kg (992.1 lb)

23.2.2 Technical data - tires

Tire front	Rear tire
90/90 B 21 54H M+S TL Mitas Enduro Trail+	**150/70 B 18 70H M+S TL** Mitas Enduro Trail+
The tires specified represent one of the possible series production tires. For alternative manufacturers, if any, contact an authorized manufacturer or qualified tire dealership. If local road approval regulations apply, these and the respective technical specifications must be observed.	

23.2.2.1 Fuel capacity

Total fuel tank capacity, approx.	
Super unleaded (ROZ 95) (p. 184)	19.5 l (5.15 liq. gal_{US})

23.2.2.2 Fuel capacity

Fuel reserve, approx.	3.55 l (0.938 liq. gal_{US})

23.3 Electrics

23.3.1 Battery

12 V battery	HTZ12A-BS	Battery voltage: 12 V Nominal capacity: 10 Ah Maintenance-free

23.3.2 Fuses

Fuse	75011088010	10 A
Fuse	75011088015	15 A
Fuse	75011088025	25 A
Fuse	58011109130	30 A

23.3.3 Lamps

Low beam/high beam	LED
Daytime running light/position light	LED
Dashboard illumination and indicator lights	LED
Brake/tail light	LED
License plate lighting	LED

23.4 Fork

23.4.1 Technical data - fork

Fork part number	A610C155X403200

Fork	**WP XPLOR PRO**
Compression damping	
Comfort	20 clicks
Standard	16 clicks
Sport	12 clicks
Full payload	8 clicks
Rebound damping	
Comfort	18 clicks
Standard	18 clicks
Sport	18 clicks
Full payload	18 clicks
Spring preload – preload adjuster	
Comfort	8 clicks
Standard	10 clicks
Sport	10 clicks
Payload	16 clicks
Spring length with preload spacer(s)	488 mm (19.21 in)
Spring rate	

Weight of rider: 65 kg … 75 kg (143.3 lb … 165.3 lb)	6.2 N/mm (35.40 lb_f/in)
Weight of rider: 75 kg … 85 kg (165.3 lb … 187.4 lb)	6.4 N/mm (36.54 lb_f/in)
Weight of rider: 85 kg … 95 kg (187.4 lb … 209.4 lb)	6.6 N/mm (37.69 lb_f/in)
Weight of rider: 95 kg … 105 kg (209.4 lb … 231.5 lb)	6.8 N/mm (38.83 lb_f/in)
Fork length	942 mm (37.09 in)

23.4.2 Fork capacity

Oil capacity, outer assembly	
Fork oil (48601166S1) (SAE 4) (p. 185)	440 ml (14.88 fl. oz_{US})
Oil capacity, cartridge	
Fork oil (48601166S1) (SAE 4) (p. 185)	175 ml (5.92 fl. oz_{US})

23.5 Shock absorber

23.5.1 Technical data - shock absorber

Shock absorber part number	A610C455X305200

Shock absorber	**WP XPLOR PRO**
Low-speed compression damping	
Comfort	16 clicks
Standard	12 clicks
Sport	10 clicks
Full payload	10 clicks
High-speed compression damping	
Comfort	40 clicks
Standard	40 clicks
Sport	40 clicks
Full payload	40 clicks
Rebound damping	
Comfort	18 clicks
Standard	15 clicks
Sport	15 clicks
Full payload	15 clicks
Installation position	390 mm (15.35 in)
Static sag	35 mm (1.38 in)
Rider sag	90 mm (3.54 in)

Spring length	220 mm (8.66 in)
Spring rate	
Weight of rider: 65 kg … 75 kg (143.3 lb … 165.3 lb)	89 N/mm (508.2 lb_f/in)
Weight of rider: 75 kg … 85 kg (165.3 lb … 187.4 lb)	92 N/mm (525.3 lb_f/in)
Weight of rider: 85 kg … 95 kg (187.4 lb … 209.4 lb)	95 N/mm (542.5 lb_f/in)
Weight of rider: 95 kg … 105 kg (209.4 lb … 231.5 lb)	98 N/mm (559.6 lb_f/in)
Gas assisted	16 bar (232 psi)

23.6 Tightening torque

23.6.1 engine tightening torques

Hose clip, intake flange M4	2.5 Nm (1.84 ft·lb_f)
Remaining screws for engine M5	6 Nm (4.4 ft·lb_f)
Screw, gear position sensor M5	5 Nm (3.7 ft·lb_f) **Loctite® 243**
Screw, oil filter cover M5	6 Nm (4.4 ft·lb_f)
Oil nozzle for piston cooling M5	2 Nm (1.5 ft·lb_f)
Screw, cam lever axial lock M5	6 Nm (4.4 ft·lb_f) **Loctite® 243**
Screw, crankshaft position sensor M5	6 Nm (4.4 ft·lb_f) **Loctite® 243**
Screw, thermostat case M5	6 Nm (4.4 ft·lb_f) **Loctite® 243**
Oil nozzle in cylinder head M5	2 Nm (1.5 ft·lb_f)
Engine vent nozzle M5	2 Nm (1.5 ft·lb_f)
Screw, shift drum retaining bracket M5	6 Nm (4.4 ft·lb_f) **Loctite® 243**
Pressure plate screw M5	3 Nm (2.2 ft·lb_f) **Loctite® 243**

Screw, shift shaft sensor M5	6 Nm (4.4 ft·lb$_f$) **Loctite® 243**
Securing screw, balancer shaft M5	5 Nm (3.7 ft·lb$_f$) **Loctite® 243**
Screw, swing angle sensor M5	6 Nm (4.4 ft·lb$_f$) **Loctite® 243**
Remaining screws for engine M6	10 Nm (7.4 ft·lb$_f$)
Screw, clutch pressure plate M6	8 Nm (5.9 ft·lb$_f$)
Screw, oil pump cover M6	10 Nm (7.4 ft·lb$_f$) **Loctite® 243**
Detent arm screw M6	10 Nm (7.4 ft·lb$_f$) **Loctite® 243**
Screw, upper guide rail M6	8 Nm (5.9 ft·lb$_f$) **Loctite® 243**
Screw, clutch cover M6	10 Nm (7.4 ft·lb$_f$)
Screw, engine case M6×30	12 Nm (8.9 ft·lb$_f$)
Screw, engine case M6×60	12 Nm (8.9 ft·lb$_f$)
Shift star screw M6	10 Nm (7.4 ft·lb$_f$) **Loctite® 243**
Screw, shift lever M6	14 Nm (10.3 ft·lb$_f$) **Loctite® 243**
Screw, starter motor M6	10 Nm (7.4 ft·lb$_f$)
Stator screw M6	10 Nm (7.4 ft·lb$_f$) **Loctite® 243**
Screw, valve cover M6	10 Nm (7.4 ft·lb$_f$)
Screw, water pump cover M6	10 Nm (7.4 ft·lb$_f$) **Loctite® 243**
Screw, water pump impeller M6	10 Nm (7.4 ft·lb$_f$) **Loctite® 243**

Chain shaft screw, cylinder head M6	10 Nm (7.4 ft·lb$_f$)
Screw, ignition cover M6×30	10 Nm (7.4 ft·lb$_f$)
Screw, ignition cover M6×35	10 Nm (7.4 ft·lb$_f$)
Screw, camshaft bearing bridge M6	10 Nm (7.4 ft·lb$_f$)
Screw, timing chain shaft M6	10 Nm (7.4 ft·lb$_f$)
Screw, bleeder flange **EJOT ALtracs®** – M6×12	8 Nm (5.9 ft·lb$_f$) **Loctite® 243**
Screw, shift shaft retaining bracket M6	10 Nm (7.4 ft·lb$_f$) **Loctite® 243**
Screw, main shaft bearing support M6	10 Nm (7.4 ft·lb$_f$) **Loctite® 243**
Screw, oil pump housing M6	10 Nm (7.4 ft·lb$_f$)
Screw, oil pan M6×30	10 Nm (7.4 ft·lb$_f$)
Screw, oil pan M6×35	10 Nm (7.4 ft·lb$_f$)
Screw, oil/water heat exchanger M6	10 Nm (7.4 ft·lb$_f$) **Loctite® 243**
Screw, ignition coil M6	8 Nm (5.9 ft·lb$_f$)
Screw, freewheel ring M6	14 Nm (10.3 ft·lb$_f$) **Loctite® 243**
Screw, clutch release lever M6	10 Nm (7.4 ft·lb$_f$) **Loctite® 243**
Screw, clutch cable retaining bracket M6	10 Nm (7.4 ft·lb$_f$) **Loctite® 243**
Nut, starter motor cable M6	5 Nm (3.7 ft·lb$_f$)
Stator screw M6	10 Nm (7.4 ft·lb$_f$)
Remaining screws for engine M8	20 Nm (14.8 ft·lb$_f$)
Screw, engine case M8×45	25 Nm (18.4 ft·lb$_f$) Long-life grease

Screw, engine case M8×55		25 Nm (18.4 ft·lb$_f$) Long-life grease
Screw, engine case M8×65		25 Nm (18.4 ft·lb$_f$) Long-life grease
Screw, engine case M8×90		25 Nm (18.4 ft·lb$_f$) Long-life grease
Slide rail screw M8		15 Nm (11.1 ft·lb$_f$) **Loctite® 243**
Stud, exhaust flange M8		15 Nm (11.1 ft·lb$_f$) **Loctite® 243**
Exhaust flange nut M8		15 Nm (11.1 ft·lb$_f$) Copper paste
Screw plug, locking screw M8		15 Nm (11.1 ft·lb$_f$)
Screw, oil pump idler gear M8		15 Nm (11.1 ft·lb$_f$) **Loctite® 243**
Oil nozzle for clutch lubrication M8		5 Nm (3.7 ft·lb$_f$) **Loctite® 243**
Screw, conrod bearing M8×0.75 engine oil	1.	5 Nm (3.7 ft·lb$_f$)
	2.	20 Nm (14.8 ft·lb$_f$)
	3.	90° (1.57 rad)
Knock sensor screw M8		20 Nm (14.8 ft·lb$_f$)
Screw with washer, engine case M8×65		25 Nm (18.4 ft·lb$_f$)
Screw with washer, engine case M8×90		25 Nm (18.4 ft·lb$_f$)
Screw, release for timing chain tensioner M10×1		8 Nm (5.9 ft·lb$_f$)
Cylinder head screw M10×1.25 engine oil	1.	5 Nm (3.7 ft·lb$_f$)
	2.	15 Nm (11.1 ft·lb$_f$)
	3.	90° (1.57 rad)
	4.	90° (1.57 rad)

Oil pressure sensor M10×1	10 Nm (7.4 ft·lb_f)
Spark plug M10	11 Nm (8.1 ft·lb_f)
Coolant temperature sensor M10×1.25	10 Nm (7.4 ft·lb_f)
Screw plug, cam lever shaft M10×1	8 Nm (5.9 ft·lb_f)
Screw plug, bearing support M10×1	12 Nm (8.9 ft·lb_f) **Loctite® 243**
Screw, rotor M12×1.5	90 Nm (66.4 ft·lb_f) Long-life grease
Screw plug, cylinder head oil drain M12×1.5	15 Nm (11.1 ft·lb_f)
Screw plug, water jacket M16×1.5	20 Nm (14.8 ft·lb_f) **Loctite® 243**
Nut, inner clutch hub M20×1.5	135 Nm (99.6 ft·lb_f)
Plug, oil screen M20×1.5	20 Nm (14.8 ft·lb_f)
Screw plug, timing chain tensioner M24×1.5	25 Nm (18.4 ft·lb_f)
Screw plug, alternator cover M24×1.5	8 Nm (5.9 ft·lb_f)
Screw plug, water pump drain hole **EJOT ALtracs® Plus** – 60×14	8 Nm (5.9 ft·lb_f) **Loctite® 243**

23.6.2 Chassis tightening torques

Nut, valve **ISO 10V2**	12 Nm (8.9 ft·lb_f) **Loctite® 2701**
Throttle valve body hose clamp	2.8 Nm (2.07 ft·lb_f)
Socket for electrical accessories	4 Nm (3.0 ft·lb_f)
Brake fluid reservoir cover, rear	1.5 Nm (1.11 ft·lb_f)
Brake fluid reservoir cover, front	2 Nm (1.5 ft·lb_f)
Compensating tank cover	1.1 Nm (0.81 ft·lb_f)
Screw, fixed grip, left M4	3 Nm (2.2 ft·lb_f)

Remaining nuts on chassis M4	3 Nm (2.2 ft·lb$_f$)
Remaining screws on chassis M4	3 Nm (2.2 ft·lb$_f$)
Remaining nuts on chassis M5	5 Nm (3.7 ft·lb$_f$)
Remaining screws on chassis M5	5 Nm (3.7 ft·lb$_f$)
Screw, foot brake lever stub M5	10 Nm (7.4 ft·lb$_f$) **Loctite® 243**
Screw, side stand sensor M5	2 Nm (1.5 ft·lb$_f$) **Loctite® 243**
Screw, trim M5	3 Nm (2.2 ft·lb$_f$)
Screw, heat guard M5	5 Nm (3.7 ft·lb$_f$) **Loctite® 243**
Screw, combination switch, left M5	2 Nm (1.5 ft·lb$_f$)
Screw, combination switch, right M5	5 Nm (3.7 ft·lb$_f$)
Screw, front sprocket cover M5	5 Nm (3.7 ft·lb$_f$) **Loctite® 243**
Screw, combination instrument M5	1 Nm (0.7 ft·lb$_f$)
Screw, air filter box M5	3 Nm (2.2 ft·lb$_f$)
Screw, brake fluid reservoir for rear brake M5	5 Nm (3.7 ft·lb$_f$) **Loctite® 243**
Screw, throttle twist grip M5	3.5 Nm (2.58 ft·lb$_f$)
Screw, license plate holder M5	5 Nm (3.7 ft·lb$_f$) **Loctite® 243**
Screw, headlight mask M5	3.5 Nm (2.58 ft·lb$_f$)
Screw, fork protector M5×12	3 Nm (2.2 ft·lb$_f$)
Screw, fork protector M5×17	3 Nm (2.2 ft·lb$_f$)
Spoke nipple M5	6 Nm (4.4 ft·lb$_f$)
Screw, fuel level sensor M5	3 Nm (2.2 ft·lb$_f$)

Screw, lower rear panel M5	3 Nm (2.2 ft·lb$_f$)
Screw, mask support M5	5 Nm (3.7 ft·lb$_f$)
Screw, instrument support on mask support, front M5	5 Nm (3.7 ft·lb$_f$)
Screw, instrument support on mask support, rear M5	5 Nm (3.7 ft·lb$_f$)
Screw, headlight mask intermediate part M5	3.5 Nm (2.58 ft·lb$_f$)
Screw, mask support cover M5	3.5 Nm (2.58 ft·lb$_f$)
Brake line holder on fork screw M5	1 Nm (0.7 ft·lb$_f$)
Screw, fuel tank insert M5	3 Nm (2.2 ft·lb$_f$)
Screw, fuel level sensor on tank M5	3 Nm (2.2 ft·lb$_f$)
Screw, ball joint of push rod on brake cylinder M6	6 Nm (4.4 ft·lb$_f$) **Loctite® 243**
Remaining nuts on chassis M6	10 Nm (7.4 ft·lb$_f$)
Remaining screws on chassis M6	10 Nm (7.4 ft·lb$_f$)
Screw, presilencer exhaust clamp M6	8 Nm (5.9 ft·lb$_f$) Copper paste
Screw, rear brake disc M6	14 Nm (10.3 ft·lb$_f$) **Loctite® 243**
Screw, front brake disc M6	14 Nm (10.3 ft·lb$_f$) **Loctite® 243**
Screw, magnetic holder on side stand M6	2 Nm (1.5 ft·lb$_f$) **Loctite® 243**
Screw, rear wheel speed sensor M6	6 Nm (4.4 ft·lb$_f$)
Screw, ignition lock (tamper-proof screw) M6	Tighten until the head tears off. **Loctite® 243**
Screw, front wheel speed sensor M6	6 Nm (4.4 ft·lb$_f$)
Screw, ground wire on frame M6	6 Nm (4.4 ft·lb$_f$)
Screw, clutch lever assembly M6	5 Nm (3.7 ft·lb$_f$)

Screw, radiator bracket, bottom M6		5 Nm (3.7 ft·lb$_f$)
Screw, 6-D sensor M6		5 Nm (3.7 ft·lb$_f$)
Screw, seat lock M6		10 Nm (7.4 ft·lb$_f$) **Loctite® 243**
Screw, battery terminal M6		4.5 Nm (3.32 ft·lb$_f$)
Screw, footrest bracket, rear M6		9 Nm (6.6 ft·lb$_f$) **Loctite® 243**
Screw, fuel tank spoiler attachment M6		4 Nm (3.0 ft·lb$_f$)
Screw, battery holding bracket M6		4.5 Nm (3.32 ft·lb$_f$)
Screw, seat installation M6		6 Nm (4.4 ft·lb$_f$)
Screw, ground wire on starter motor M6		10 Nm (7.4 ft·lb$_f$)
Cable on starter motor screw M6		5 Nm (3.7 ft·lb$_f$)
Screw, shift rod M6		10 Nm (7.4 ft·lb$_f$) **Loctite® 243**
Screw, shift shaft deflector on shift shaft M6		10 Nm (7.4 ft·lb$_f$) **Loctite® 243**
Nut, hand brake lever M6	Attach torque to nut.	10 Nm (7.4 ft·lb$_f$)
Screw, brake assembly M6		5 Nm (3.7 ft·lb$_f$)
Nut, push rod, foot brake lever M6		6 Nm (4.4 ft·lb$_f$)
Nut, shift rod M6		6 Nm (4.4 ft·lb$_f$)
Brake cylinder screw on the rear brake system M6		10 Nm (7.4 ft·lb$_f$) **Loctite® 243**
Screw, cross member in rear M6×13		10 Nm (7.4 ft·lb$_f$) **Loctite® 243**
Screw, engine guard M6		8 Nm (5.9 ft·lb$_f$)
Fuel tank cover screw M6×12		8 Nm (5.9 ft·lb$_f$)
Fuel tank cover screw M6×22		8 Nm (5.9 ft·lb$_f$)

Screw cap, fuel tank cover M6	8 Nm (5.9 ft·lb$_f$)
Nut, shift rod M6LH	6 Nm (4.4 ft·lb$_f$)
Screw, fuel pump M6	6 Nm (4.4 ft·lb$_f$)
Screw, brace for mask support center part M6	3 Nm (2.2 ft·lb$_f$) **Loctite® 243**
Screw, cross member in rear M6×12	6 Nm (4.4 ft·lb$_f$) **Loctite® 243**
Screw, engine guard retaining bracket M6	10 Nm (7.4 ft·lb$_f$) **Loctite® 243**
Screw, fuel cock M6	6 Nm (4.4 ft·lb$_f$)
Screw, fuel tank clamp M6	3 Nm (2.2 ft·lb$_f$)
Screw, mask support on steering head M6	10 Nm (7.4 ft·lb$_f$) **Loctite® 243**
Screw, voltage regulator M6	6 Nm (4.4 ft·lb$_f$)
Screw, cable on starter relay M6	4.5 Nm (3.32 ft·lb$_f$)
Screw, activated carbon filter on retaining bracket M6	8 Nm (5.9 ft·lb$_f$)
Screw, ABS module M6	8 Nm (5.9 ft·lb$_f$)
Handguard fitting M6	6 Nm (4.4 ft·lb$_f$)
Nut, foot brake lever adjustment M6	6 Nm (4.4 ft·lb$_f$)
Screw, mask support on frame M6	10 Nm (7.4 ft·lb$_f$) **Loctite® 243**
Screw, exhaust clamp on main silencer M6	8 Nm (5.9 ft·lb$_f$)
Battery cover attachment screw M6	5 Nm (3.7 ft·lb$_f$)
Foot brake lever, fitting M8	25 Nm (18.4 ft·lb$_f$) **Loctite® 2701**
Remaining nuts on chassis M8	25 Nm (18.4 ft·lb$_f$)
Remaining screws on chassis M8	25 Nm (18.4 ft·lb$_f$)

Screw, footrest bracket, rear M8	25 Nm (18.4 ft·lb$_f$) **Loctite® 243**
Screw, top triple clamp M8	15 Nm (11.1 ft·lb$_f$)
Screw, bottom triple clamp M8	12 Nm (8.9 ft·lb$_f$)
Screw, fork shoe M8	15 Nm (11.1 ft·lb$_f$)
Handlebar clamp screw M8	20 Nm (14.8 ft·lb$_f$)
Screw, steering damper on triple clamp M8	8 Nm (5.9 ft·lb$_f$) **Loctite® 243**
Screw, steering damper on holder M8	8 Nm (5.9 ft·lb$_f$) **Loctite® 243**
Screw, steering stem M8	20 Nm (14.8 ft·lb$_f$) **Loctite® 243**
Screw, presilencer on frame M8	15 Nm (11.1 ft·lb$_f$) **Loctite® 243**
Screw, main silencer fastening M8	15 Nm (11.1 ft·lb$_f$)
Screw, engine fixing arm linkage bracket M8	25 Nm (18.4 ft·lb$_f$) **Loctite® 243**
Screw, shift lever M8	25 Nm (18.4 ft·lb$_f$) **Loctite® 2701**
Screw, stand spring fastening M8	15 Nm (11.1 ft·lb$_f$) **Loctite® 2701**
Pin, rear brake caliper M8	22 Nm (16.2 ft·lb$_f$) **Loctite® 243**
Screw, grab handle M8	25 Nm (18.4 ft·lb$_f$) **Loctite® 243**
Securing bolt for brake pads M8	10 Nm (7.4 ft·lb$_f$)
Screw, seat bracket M8	25 Nm (18.4 ft·lb$_f$) **Loctite® 243**
Screw, engine guard frame M8	25 Nm (18.4 ft·lb$_f$) **Loctite® 243**

Nut, rear sprocket screw M8	35 Nm (25.8 ft·lb$_f$) **Loctite® 2701**
Screw, handguard M8	25 Nm (18.4 ft·lb$_f$)
Screw, foot brake lever return spring bolt M8	12 Nm (8.9 ft·lb$_f$) **Loctite® 2701**
Subframe screw M8	25 Nm (18.4 ft·lb$_f$) **Loctite® 243**
Screw, front brake caliper M8	25 Nm (18.4 ft·lb$_f$)
Screw, main silencer holder M8	25 Nm (18.4 ft·lb$_f$)
Screw, seat support in subframe M8×35	15 Nm (11.1 ft·lb$_f$) **Loctite® 243**
Nut, manifold on cylinder head M8	13 Nm (9.6 ft·lb$_f$)
Remaining nuts on chassis M10	45 Nm (33.2 ft·lb$_f$)
Remaining screws on chassis M10	45 Nm (33.2 ft·lb$_f$)
Screw, front brake caliper M10×1.25	45 Nm (33.2 ft·lb$_f$) **Loctite® 243**
Screw, front footrest bracket M10×30	45 Nm (33.2 ft·lb$_f$) **Loctite® 243**
Screw, handlebar mount M10	45 Nm (33.2 ft·lb$_f$) **Loctite® 243**
Screw, side stand M10	40 Nm (29.5 ft·lb$_f$) **Loctite® 243**
Banjo bolt, brake line M10×1	25 Nm (18.4 ft·lb$_f$)
Screw, front footrest bracket M10×40	45 Nm (33.2 ft·lb$_f$) **Loctite® 243**
Screw, front footrest bracket M10×65	45 Nm (33.2 ft·lb$_f$) **Loctite® 243**
Engine bracket screw M10	45 Nm (33.2 ft·lb$_f$) **Loctite® 243**

Subframe screw M10	50 Nm (36.9 ft·lb$_f$) **Loctite® 243**
Turn signal nut M10×1.25	4 Nm (3.0 ft·lb$_f$)
Screw, swingarm pivot M12	100 Nm (73.8 ft·lb$_f$)
Top shock absorber screw M12	80 Nm (59.0 ft·lb$_f$) **Loctite® 2701**
Bottom shock absorber screw M12	80 Nm (59.0 ft·lb$_f$) **Loctite® 2701**
Oxygen sensor M18×1.5	50 Nm (36.9 ft·lb$_f$)
Steering head screw M20×1.5	18 Nm (13.3 ft·lb$_f$)
Bushing, shock absorber support M20LH×1.5	10 Nm (7.4 ft·lb$_f$) Long-life grease
Nut, engine sprocket M20×1.5	100 Nm (73.8 ft·lb$_f$) **Loctite® 243**
Screw, swingarm adjusting screw M20×1.5	10 Nm (7.4 ft·lb$_f$)
Nut, wheel spindle, rear M25×1.5	90 Nm (66.4 ft·lb$_f$) Long-life grease
Screw, wheel spindle, front M25×1.5	45 Nm (33.2 ft·lb$_f$) Long-life grease
Screw, tail light **EJOT DELTA PT®** – 45×12 – Z	1.5 Nm (1.11 ft·lb$_f$)
Remaining screws on chassis **EJOT PT®** – K45×12	1 Nm (0.7 ft·lb$_f$)
Remaining screws on chassis **EJOT PT®** – K50×12	1 Nm (0.7 ft·lb$_f$)
Remaining screws on chassis **EJOT PT®** – K50×14	1 Nm (0.7 ft·lb$_f$)
Remaining screws on chassis **EJOT PT®** – K50×16	2 Nm (1.5 ft·lb$_f$)
Remaining screws on chassis **EJOT PT®** – K50×18	2 Nm (1.5 ft·lb$_f$)
Screw, inside cover on radiator **EJOT PT®** – K50×18	4.5 Nm (3.32 ft·lb$_f$)

24.1 Declarations of conformity

Note
The functional and equipment scope is model-dependent and may not include all wireless systems and application areas referred to.

JNS Instruments Ltd. hereby declares that the **252M1100** wireless system conforms with the relevant guidelines. The full text of the Declaration of Conformity is available at the following Internet address.
Certification website: https://www.ktm.com/252m1100

KTM AG hereby declares that the **Immo641** wireless system conforms with the relevant guidelines. The full text of the Declaration of Conformity is available at the following Internet address.
Certification website: https://www.ktm.com/immo641

Schrader Electronics Ltd hereby declares that the **Tyre Pressure Monitoring System** wireless system conforms with the relevant guidelines. The full text of the Declaration of Conformity is available at the following Internet address.
Certification website: https://www.ktm.com/tpms

25.1 Recycling

I02045-10

Further information is available at the following website.
Recycling information website: https://www.quefairedemesdechets.fr

A Technical terms

ABS	Anti-lock braking system	Safety system that prevents locking of the wheels when riding straight ahead without the influence of lateral forces.
ATIR	Automatic Turn Indicator Reset	Software, which automatically switches the turn signal off according to a time or travel distance counter.
DRL	Daytime Running Light	Light that increases the visibility of the vehicle during the day, but unlike the low beam is not focused and does not illuminate the road ahead.
	KTMconnect	System for remote communication with suitable cell phones and communication systems for telephony and audio
MSC	Motorcycle stability control	This is an auxiliary function for the ABS, which can prevent locking and slipping of the wheels during braking while leaning at an angle, within physical limitations
MTC	Motorcycle Traction Control	Additional engine management function, where the engine torque is reduced in the event of rear wheel slip.
OBD	On-board diagnosis	Vehicle system that monitors the specified parameters of the vehicle electronics.
	QUICKSHIFTER+	Engine electronics function for shifting up and down without clutch actuation

B Fuels

Super unleaded

Standards	
• ROZ 95	→ DIN EN 228

Fuel additive

Recommended supplier
MOTOREX®
• **FUEL STABILIZER**

C Operating supplies

Street chain spray

Recommended supplier

MOTOREX®

- **CHAINLUBE ROAD STRONG**

Fork oil

Order details

- 48601166S1

Standards

- SAE 4 → SAE

Universal oil spray

Recommended supplier

MOTOREX®

- **JOKER 440 SYNTHETIC**

Copper paste

Long-life grease

Recommended supplier

MOTOREX®

- **Bike Grease 2000**

engine oil

Recommended supplier

MOTOREX®

- **POWER SYNT 4T**

Standards

→ JASO T903 MA2

- SAE 10W/50 → SAE

Properties

- fully synthetic

Brake fluid DOT 5.1

Recommended supplier

MOTOREX®

- **BRAKE FLUID DOT 5.1**

Standards

→ DOT

Coolant

Recommended supplier

MOTOREX®

- **COOLANT M3.0**

Properties

• Antifreeze protection to at least	−25 °C (−13.0 °F)

D Cleaning agents

Shine spray with beading effect

Recommended supplier

MOTOREX®

- **MOTO SHINE MS1**

Chain cleaner

Recommended supplier

MOTOREX®

- **CHAIN CLEAN**

Preserving materials

Recommended supplier

MOTOREX®

- **MOTO PROTECT**

Cleaning agents for plastics, glass, lacquers, metals, windshields and visors

Recommended supplier

MOTOREX®

- **QUICK CLEANER**

Environmentally neutral universal cleaning agent

Recommended supplier

MOTOREX®

- **MOTO CLEAN UNIVERSAL**

E Icons

E.1 Symbol colors

E.1.1 Red symbols

Red symbols indicate a fault status that requires immediate intervention.

	The oil pressure warning light lights up red

E.1.2 Yellow and orange symbols

Yellow and orange symbols indicate a malfunction status that requires prompt intervention. Active driving aids are also represented by yellow or orange symbols.

	Ice warning is active on the display.
	ABS warning light lights up yellow
	The ABS rear warning light lights up yellow
	The malfunction indicator light lights up yellow
	TC indicator lamp lights up/flashes yellow
	The cruise control system indicator lamp (optional) lights up yellow
	Hazard blinker indicator lamp flashes yellow
	General warning light lights up yellow

E.1.3 Green and blue symbols

Green and blue symbols convey information.

	The turn signal indicator light flashes green with a steady blinking interval
	The high beam indicator lamp lights up blue
	The cruise control system indicator lamp (optional) lights up green
	The idle indicator lamp lights up green

1

12 V battery
- charging 140
- installation 139
- removing 137

A

ABS fuses
- changing 143

ACC1
- front 147
- rear 147

ACC2
- front 147
- rear 147

Accessories 16
Auxiliary substances 16

B

Battery cover
- installation 107
- removing 106

Brake discs
- checking 120

Brake fluid
- adding front brake 121
- adding to rear brake 124

Brake fluid level
- checking on front brake 121
- checking on rear brake 124

Brake lining retainers
- checking on front brake 123
- checking on rear brake 125

Brake pad
- checking on front brake 123

Brake pads
- checking on rear brake 125

Brake pedal
- adjusting the basic position 73
- checking the free travel 123

Brakes 84
Braking 84

Breakdown
- towing 87

C

Chain
- checking 102
- cleaning 99
- dirt, checking for 99

Chain tension
- adjusting 101
- checking 100

Changing gear 81
Clothing 12

Clutch lever
- adjusting the basic position 72

Coolant level
- checking in the compensating tank 148
- correcting in the compensating tank 149

Cornering MTC 152
Customer service 16

D

dashboard
- **ABS** 48
- activation and testing 34
- **Audio** 57
- **Bike info** 52
- **Bluetooth** 61
- call 58
- **Clock format** 65
- **Date format** 66
- **Demo mode** 70
- **Distance** 66
- **DRL** 67
- **Extra Functions** 69
- favorites 55, 59
- **Favorites–display 1–4** 59
- **Fuel Cons** 67
- **Headset Type** (optional) 63
- **Heated Grips** (function optional) 68
- **Heated Grips** (optional) 50
- **«heating»** (function optional) 68
- indicator lamps 37
- **KTMconnect** (optional) 60
- **Language** 67
- last search 55
- **Motorcycle** 47
- **MTC** (optional) 49
- **MTC+MSR** (optional) 49
- navigation 54
- overview 34
- **Pairing** 61
- **Pressure** 67
- **Quick Selector 1** 60
- **Quick selector 2** 60
- **QUICKSHIFTER+** (optional) 50
- **Ride Mode** 47, 151
- **Rider' Headset** (optional) 62

Seat Heating Pillion (function optional) 69
Seat Heating Rider (function optional) 69
Seat Heating Rider (optional) 50
Settings 59
skip Waypoint 56
Slip Adjuster (optional) 51
stop Navigation 57
Temperature 66
Throttle Response (optional) 51
trip 53
Trip 1 53
Trip 2 54
Units 66
volume 56
Warning 53
warnings 36

Defined use 13
Difficult operating conditions 16, 78

Driving
starting off 80

E

Electric starter 24

Engine
running in 77

Engine oil
adding 155
changing 153

Engine oil level
checking 153

Environment 13

F

Figures 16

Foot brake lever stub
adjusting 73

Fork
adjusting the spring preload 92
Bleeding the fork legs 93
compression damping, adjusting 91
rebound, adjusting 91

Fork legs
cleaning the dust boots 113

Fork protector
installation 113
removing 113

Free travel of clutch lever
adjusting 156
checking 156

Front fender
installation 112
removing 112

Front sprocket
checking 102

Front wheel
installing 128
removing 127

Fuel tank cap
closing 27
opening 26

Fuel tank spoiler left
installation 109
removing 107

Fuel tank spoiler right
installation 111
removing 110

Fuse
of the individual electrical power consumers, changing 144

G

Gear shift lever
adjusting the basic position 74
checking the basic position 74

H

Handbrake lever
adjusting the basic position 72

Handlebar position
adjusting 71

Headlight
adjusting headlight range 146
setting, checking 146

I

Ignition lock 25
Implied warranty 16
Improper use 14
Indicator lamps 37
Intended use 13

K

Key number 19
Kill switch 24

L

Loading the vehicle 77
Luggage 77

M

Main fuse
changing 142

Manufacturer warranty 16

Manufacturer's warranty 16

Motorcycle
cleaning 157
lifting gear at rear, raising with 97
raising the front with lifting gear 97
removing the front from the lifting gear 98
removing the rear from the lifting gear 97

Motorcycle traction control 152

Muffler
installation 117
removing 117

O

Oil filter
changing 153

Oil screens
cleaning 153

Operating conditions
use in difficult conditions 16

Operation 12

Owner's manual 13

P

Parking 85

Preparing for use
after storage 161
checks and maintenance measures when preparing for use 79
notes on preparing for first use 76

Protective clothing 12

R

Rear hub damping rubbers
checking 132

Rear sprocket
checking 102

Rear wheel
installation 131
removing 130

Recycling 182

Refueling
fuel 87

Resources 16

Riding 81

S

Safe use 12

Seat
mounting 99
removing 99

Serial number
lock system 19

Service 16

Shock absorber
adjusting the high-speed compression damping 94
adjusting the low-speed compression damping 93
adjusting the rebound damping 95
adjusting the spring preload 95

Side fairing left
installation 105
removing 104

Side fairing right
installation 106
removing 105

Skid plate
installation 116
removing 115

spare parts 16

Spoke tension
checking 135

Starting 79

Steering
locking 25
unlocking 26

Steering lock 25

Stopping 85

Storage 160

Storage compartment, left
closing 29
opening 28

Storage compartment, right
closing 30
opening 29

T

Tampering 11

time
adjusting 64

Tire condition
checking 133

Tire pressure
checking 134
towing 87
Transportation 86

V

Vehicle identification number 19
VIN 19

W

Windshield
installation 114
removing 114
Winter operation
checks and maintenance steps 158
Work rules 12

3240371en

20/04/2026

KTM Sportmotorcycle GmbH
5230 Mattighofen/Austria
https://www.ktm.com