Owner's manual 2027

EX 300

Item no.: 3215289en

Dear GASGAS customer,

Congratulations on your decision to purchase a GASGAS motorcycle. You are now the owner of a state-of-the-art sports vehicle which, with proper care, will bring you pleasure for a long time to come.

We hope you enjoy your bike and have a safe journey at all times!

You can enter the serial numbers of your vehicle below to find the serial numbers more quickly if required:

Vehicle identification number (p. 14)	Stamp of the contractual partner
Engine number (p. 14)	

The owner's manual contained the latest information for this model series at the time of publication. However, minor differences due to further developments in design cannot be ruled out completely.
All specifications are non-binding. GASGAS GmbH specifically reserves the right to modify or delete technical specifications, prices, colors, forms, materials, services, designs, equipment, etc., without prior notice and without specifying reasons, to adapt these to local conditions, as well as to stop production of a particular model without prior notice. GASGAS accepts no liability for delivery options, differences from illustrations and descriptions, misprints, and other errors. The models portrayed partly contain special equipment that does not belong to the regular scope of supply.

© 2026 GASGAS GmbH, Mattighofen Austria
All rights reserved. Figures: Visus Studios/INDG/GASGAS
Written permission from the copyright owner is required before any duplication or reproduction.

ISO 9001

GASGAS applies quality assurance processes that lead to the highest possible product quality as defined in the ISO 9001 international quality management standard.

12 100 6061

REG.NO. 12 100 6061

Issuing institution:

TÜV SÜD Management Service GmbH

GASGAS GmbH
Stallhofnerstraße 3
5230 Mattighofen, Austria

This document is valid for:

EX 300 US (F0475127)

3215289en

31/08/2026

Table of contents

1 Means of representation 7

1.1 Conventions 7
1.1.1 Icons 7
1.1.2 Formatting 7
1.1.3 Abbreviations 7

2 Safety 8

2.1 Safety instructions 8
2.2 Ban on tampering 8
2.3 Safe use 8
2.4 Protective clothing 9
2.5 Work rules 9
2.6 Environment 10
2.7 Owner's manual 10
2.8 Defined use – intended use 10
2.9 Improper use 10

3 Important notes 11

3.1 Manufacturer's warranty, implied warranty 11
3.2 Auxiliary material, operating material 11
3.3 GASGAS Technical Accessories spare parts 11
3.4 Service 11
3.5 Figures 11
3.6 Customer service 11

4 View of the vehicle 12

4.1 View of vehicle, front left (example) 12
4.2 View of vehicle, rear right (example) 13

5 Serial number 14

5.1 Vehicle identification number 14
5.2 Frame label 14
5.3 Engine number 14
5.4 Fork part number 14
5.5 Shock absorber part number 15

6 Controls 16

6.1 Clutch lever 16
6.2 Handbrake lever 16
6.3 Throttle grip 16
6.4 Kill switch 16
6.5 Electric starter 17
6.6 Overview of indicator lights 17
6.7 Dashboard 17
6.8 Opening the fuel tank cap 18
6.9 Closing the fuel tank cap 18
6.10 Cold start button 19
6.11 Idle speed adjustment screw 19
6.12 Gear shift lever 19
6.13 Brake pedal 20
6.14 Side stand 20

7 Preparing for use 21

7.1 Notes on preparing for first use 21
7.2 Running in the engine 22
7.3 Starting performance of lithium-ion batteries at low temperatures 23
7.4 Preparing the vehicle for difficult operating conditions 23
7.5 Preparing the vehicle for rides on dry sand 23
7.6 Preparing the vehicle for rides on wet sand 24
7.7 Preparing for rides on wet and muddy surfaces 25
7.8 Preparing vehicle for rides at high temperature or slow speed 25
7.9 Preparing the vehicle for low temperatures or snow 25

8 Riding instructions 26

8.1 Checks and maintenance measures when preparing for use 26
8.2 Starting the vehicle 26
8.3 Starting off 27
8.4 Shifting, riding 27
8.5 Braking 28
8.6 Stop, park. 29
8.7 Transportation 29
8.8 Refueling 30

9 Service schedule 31

9.1 Service schedule 31

10 Tuning the chassis 34

10.1 Checking the basic chassis setting with the rider's weight 34
10.2 Compression damping of the shock absorber 34
10.3 Adjusting the low-speed compression damping of the shock absorber 34
10.4 Adjusting the high-speed compression damping of the shock absorber 35
10.5 Adjusting the rebound damping of the shock absorber 35
10.6 Measuring the dimension of the unloaded rear wheel 36
10.7 Checking the static sag of the shock absorber 37
10.8 Checking the rider sag of the shock absorber 37
10.9 Adjusting the preload for the shock absorber 38
10.10 Adjusting the rider sag 39
10.11 Checking the basic setting of the fork 40
10.12 Adjusting the compression damping of the fork 40

10.13 Adjusting the rebound damping of the fork ... 40
10.14 Handlebar position ... 41
10.15 Adjusting the handlebar position ... 41

11 Service work on the chassis ... 44

11.1 Raising the motorcycle with a lift stand ... 44
11.2 Removing the motorcycle from the lift stand ... 44
11.3 Bleeding the fork legs ... 44
11.4 Cleaning the dust boots of the fork legs ... 45
11.5 Removing the fork protector ... 46
11.6 Installing the fork protector ... 46
11.7 Removing the right side panel ... 46
11.8 Installing the right side panel ... 47
11.9 Removing the frame protector ... 47
11.10 Installing the frame protector ... 47
11.11 Removing the fork legs ... 48
11.12 Installing the fork legs ... 48
11.13 Removing the lower triple clamp ... 49
11.14 Installing the lower triple clamp ... 50
11.15 Checking the steering head bearing play ... 52
11.16 Adjusting the steering head bearing play ... 52
11.17 Lubricating the steering head bearing ... 53
11.18 Removing the number plate ... 53
11.19 Mounting the number plate ... 54
11.20 Removing the front top fender ... 54
11.21 Installing the front top fender ... 54
11.22 Removing the shock absorber ... 55
11.23 Installing the shock absorber ... 56
11.24 Removing the seat ... 57
11.25 Mounting the seat ... 58
11.26 Removing air filter box cover ... 59
11.27 Installing air filter box cover ... 59
11.28 Removing the air filter ... 60
11.29 Installing the air filter ... 61
11.30 Cleaning the air filter and air filter box ... 61
11.31 Preparing the air filter box cover for securing ... 62
11.32 Removing the muffler ... 62
11.33 Installing muffler ... 63
11.34 Changing the damping material on the main silencer ... 63
11.35 Removing the fuel tank ... 64
11.36 Installing the fuel tank ... 66
11.37 Checking the chain for dirt ... 67
11.38 Cleaning the chain ... 68
11.39 Checking the chain tension ... 68
11.40 Adjusting the chain tension ... 69
11.41 Checking the chain, rear sprocket, front sprocket, and chain guide ... 70
11.42 Checking the frame ... 73
11.43 Checking the swingarm ... 73
11.44 Checking the throttle cable routing ... 73
11.45 Checking the hand grip ... 74
11.46 Adjusting the basic position of the clutch lever ... 75
11.47 Checking/correcting the fluid level of hydraulic clutch ... 75
11.48 Changing the hydraulic clutch fluid ... 76

12 Brake system ... 78

12.1 Checking the free travel on the hand brake lever ... 78
12.2 Adjusting the basic position of the hand brake lever ... 78
12.3 Checking the brake discs ... 78
12.4 Checking the brake fluid level for the front brake ... 79
12.5 Adding brake fluid for the front brake ... 80
12.6 Checking that the brake pads of the front brake are secured ... 81
12.7 Changing the brake pads of the front brake ... 81
12.8 Checking the free travel of the brake pedal ... 84
12.9 Adjusting the basic position of the brake pedal ... 84
12.10 Checking the brake fluid level for the rear brake ... 85
12.11 Adding brake fluid for the rear brake ... 85
12.12 Checking that the brake pads of the rear brake are secured ... 86
12.13 Changing the rear brake pads ... 87

13 Wheels, tires ... 90

13.1 Removing the front wheel ... 90
13.2 Installing the front wheel ... 91
13.3 Removing the rear wheel ... 91
13.4 Installing the rear wheel ... 92
13.5 Checking the tire condition ... 93
13.6 Checking the tire pressure ... 94
13.7 Checking the spoke tension ... 94

14 Electrics ... 96

14.1 Removing the 12 V battery ... 96
14.2 Installing the 12 V battery ... 97
14.3 Charging the 12 V battery ... 98
14.4 Changing the main fuse ... 101
14.5 Changing the fuse of the fuel pump ... 102
14.6 Diagnostic connector ... 103

Table of contents

15 Exhaust control 104

15.1 Programming the end positions of the exhaust control 104

16 Cooling system 106

16.1 Cooling system 106
16.2 Checking the frost protection and coolant level 106
16.3 Checking the coolant level 107
16.4 Draining the coolant 108
16.5 Refilling the coolant 108
16.6 Changing the coolant 110

17 Tuning the engine 112

17.1 Checking the play in the throttle cable 112
17.2 Adjusting the throttle cable play 112
17.3 Adjusting the idle speed 113
17.4 Checking the basic position of the gear shift lever 114
17.5 Adjusting the basic position of the gear shift lever 114

18 Service work on the engine 116

18.1 Changing the fuel screen 116
18.2 Checking the gear oil level 117
18.3 Changing the gear oil 118
18.4 Adding gear oil 119

19 Cleaning, care 121

19.1 Cleaning the motorcycle 121

20 Storage 123

20.1 Storage 123
20.2 Preparing for use after storage 124

21 Troubleshooting 125

21.1 Troubleshooting 125

22 Flash codes 127

22.1 Flash code 127

23 Technical specifications 130

23.1 Engine 130
23.1.1 Technical data - engine 130
23.1.2 Capacities - engine 130
23.2 Chassis 131
23.2.1 Technical data - chassis 131
23.2.2 Technical data - tires 132
23.2.3 Capacities - vehicle 132
23.3 Electrics 132
23.3.1 Battery 132
23.3.2 Fuses 132
23.3.3 Lamps 132
23.4 Fork 132
23.4.1 Technical data - fork 132
23.4.2 Capacities - fork 133
23.5 Shock absorber 133
23.5.1 Technical data - shock absorber 133
23.5.2 Capacities - shock absorber 134
23.6 Tightening torque 134
23.6.1 Engine tightening torques 134
23.6.2 Chassis tightening torques 136

24 Recycling 140

24.1 Recycling 140

Notes 141

A Technical terms 141

B Operating material 142

C Fuels 144

D Electrics 145

E Cleaning agents 146

F Icons 147

F.1 Symbol colors 147
F.1.1 Yellow and orange symbols 147

Index 148

1.1 Conventions

1.1.1 Icons

✓	Indicates a desired result (e.g. of a work step or a function).
✗	Indicates an undesired result (e.g. of a work step or a function).
	All work marked with this symbol requires specialist knowledge and technical understanding. Ensure that this work is carried out or supervised by trained personnel from an authorized contractual partner, and that any special tools required are used.
	Indicates a page reference.
	Indicates information with more details.
	Indicates a tip, e.g. to simplify work.
»	Indicates the result from a test step.
◀	Indicates the end of an activity, including any rework.

1.1.2 Formatting

Proprietary name	Indicates a proprietary name.
Name ®	Indicates a protected name.
Brand ™	Indicates a brand available on the open market.
Underlined terms	Refer to technical details of the vehicle or indicate technical terms that are explained in the glossary.

1.1.3 Abbreviations

2-pc.	two-part
Part no.	Part number
or	respectively
approx.	circa
etc.	et cetera
poss.	possibly/possible
if necessary	if necessary
cmpl.	complete
min.	at least
no.	number
no fig.	no figure
s.	see
among others	among others/not limited to
and the like	and the like
etc.	et cetera
cf.	compare
e.g.	for example

2.1 Safety instructions

Function of the safety instruction

Safety instruction brings attention to dangers when handling the product. Hazards are classified, named, described, and supplemented with information on how to avoid them.

- If there is a safety instruction before a list of instructions, the danger exists throughout the entire activity.
- If there is a safety instruction immediately before an instruction, the next step presents a danger.

Safety instruction layout

All safety instructions are identified by a signal word and a warning symbol. The combination of signal word and warning symbol determines the degree of danger.

DANGER
Indicates an imminent danger that leads to serious injury or death.

WARNING
Indicates a potentially imminent danger that could lead to serious injury or death.

CAUTION
Indicates a potentially imminent danger that can lead to minor or slight injuries.

NOTE
Indicates a situation that can lead to damage to the product or the product environment.

NOTE
Indicates a situation that can lead to environmental damage.

2.2 Ban on tampering

No changes may be made to the noise control equipment and components.

Tampering that is prohibited

- Removing or disabling any devices or components used for noise control before the new vehicle is sold or delivered to the end customer.
- Removing or disabling any device or component used for noise control for purposes other than service, repair, or replacement during the service life of the vehicle.
- Use of the vehicle after a device or component used for noise control has been removed, disabled, or inadequately maintained.

Examples of prohibited tampering

- Removing or drilling through rear mufflers, baffle plates, manifolds, or other components that conduct exhaust gases.
- Removing or puncturing parts of the intake system.
- Replacing moving parts of the vehicle, or parts of the exhaust system or intake system, with parts other than those specified by the manufacturer.

2.3 Safe use

DANGER
Danger of accidents A rider who is not fit to ride poses a danger to themself and to others.
– Do not operate the vehicle if you are not fit to ride due to alcohol, drugs, or medication.
– Do not operate the vehicle if you are physically or mentally incapable of doing so.

DANGER
Danger of poisoning Exhaust gases are toxic and inhaling them may result in unconsciousness and death.
- Always ensure that there is sufficient ventilation when running the engine.
- Use suitable exhaust extraction when starting or running the engine in an enclosed space.

WARNING
Danger of burns Some vehicle components become hot when the vehicle is operated.
- Do not touch any parts such as the exhaust system, radiator, engine, damper, or brake system before the vehicle parts have cooled down.
- Allow the vehicle parts to cool down before performing any work on the vehicle.

The vehicle should only be used when it is in perfect technical condition, for its intended purpose, and in a safe and environmentally-friendly manner.
The vehicle must only be used by trained persons.
Have any faults that impair safety immediately remedied by an authorized contractual partner.
Observe the information and warning stickers on the vehicle.

2.4 Protective clothing

WARNING
Risk of injury Missing or inadequate protective clothing increases the risk of injury.
- Wear appropriate protective clothing such as helmet, boots, gloves as well as pants and a jacket with protectors on all rides.
- Always wear protective clothing that is in good condition and meets the legal regulations.

In the interest of your own safety, GASGAS recommends operating the vehicle only with suitable protective clothing.

2.5 Work rules

Unless specified otherwise, the ignition must be switched off during all work (models with ignition lock, models with transponder key) or the engine must be at a standstill (models without ignition lock or transponder key).
Special tools are required for some work. The tools are not part of the vehicle, but can be ordered using the number in parentheses. Example: bearing puller (15112017000)
Unless otherwise noted, normal conditions apply to all tasks and descriptions.

Ambient temperature	20 °C (68.0 °F)
Ambient air pressure	1,013 mbar (14.69 psi)
Relative air humidity	60 ±5 %

During assembly, use new parts to replace parts which cannot be reused (e.g. self-locking screws and nuts, expansion screws, seals, sealing rings, O-rings, pins, and lock washers).
A thread lock (e.g. **Loctite®**) is required for some screw connections. Observe the manufacturer's specific instructions for use.
If thread lock (e.g. **Precote®**) has already been applied to a new part, do not apply any additional thread lock.
After disassembly, clean the parts that are to be reused and check them for damage and wear. Replace damaged or worn parts.
After completing a repair or service, check the operating safety of the vehicle.

2.6 Environment

If you use your motorcycle responsibly, you can ensure that problems and conflicts do not occur. To protect the future of the motorcycle sport, make sure that you use your motorcycle legally, be environmentally aware, and respect the rights of others.

When disposing of used oil, other operating and auxiliary fluids, and used components, comply with the laws and regulations of the respective country.

As motorcycles are not subject to the EU regulations governing the disposal of end-of-life vehicles, there are no legal regulations that pertain to the disposal of an end-of-life motorcycle. An authorized partner will be happy to help.

2.7 Owner's manual

It is important that you read this owner's manual carefully and completely before making your first trip. The owner's manual contains useful information and many tips on how to operate, handle, and service your vehicle. Only then will you find out how to customize the vehicle ideally for your own use and how you can protect yourself from injury.

Tip

Store the owner's manual on your terminal device, for example, so that you can read it whenever you need to.

If you would like to know more about the vehicle or have questions about the material, please contact an authorized partner.

The owner's manual is an important component of the vehicle. If the vehicle is sold, the owner's manual must be downloaded again by the new owner.

The owner's manual can be downloaded multiple times using the QR code or the link on the delivery certificate.

The owner's manual is also available for download from your authorized contractual partner and on the GASGAS website.

International GASGAS website: https://www.gasgas.com/

A printed copy can be ordered from the following address.

Website for printed copy: https://print.ktm.com

2.8 Defined use – intended use

This vehicle has been designed and built to withstand the typical stresses and strains of racing. This vehicle complies with the currently valid regulations and categories of the top international motorsports organizations.

Note

Only use this vehicle on designated tracks away from public roads.

This motorcycle is designed for use in offroad endurance competition and not primarily for use in motocross.

2.9 Improper use

The vehicle may only be used as intended.

Improper use can result in danger to people, property and the environment.

Any use of the vehicle beyond the intended and defined use constitutes misuse.

Improper use includes the use of operating and auxiliary materials that do not meet the required specifications for the respective use.

3.1 Manufacturer's warranty, implied warranty

The work prescribed in the service schedule must only be carried out by an authorized contractual partner and then confirmed in the electronic proof of service, as otherwise all warranty claims will be void. Damage or secondary damage caused by tampering with and/or conversions on the vehicle are not covered by the manufacturer's warranty.

3.2 Auxiliary material, operating material

Use operating materials and auxiliary materials in accordance with the operating instructions and specifications.

3.3 GASGAS Technical Accessories spare parts

For your own safety, only use spare parts and accessory products that are approved and/or recommended by GASGAS and have them installed by an authorized contractual partner. GASGAS accepts no liability for other products and any resulting damage or loss.

The part numbers of some spare parts and accessories are given in brackets in the respective descriptions. Your authorized contractual partner will be happy to advise you.

The current GASGAS Technical Accessories for your vehicle are available from your authorized contractual partner and on the GASGAS website.

International GASGAS website: https://www.gasgas.com/

3.4 Service

A prerequisite for perfect operation and prevention of premature wear is that the service, care, and tuning work on the engine and chassis is properly carried out as described in the owner's manual. An incorrect suspension setting can lead to damage and breakage of chassis components.

Use of the vehicle under arduous conditions, such as on sand or on wet, dusty and muddy surfaces, can result in significantly increased wear of components, such as the powertrain, brake system, air filter, or suspension components. For this reason, it may be necessary to inspect or replace parts before the next scheduled service interval.

Please adhere to the prescribed run-in times and service intervals at all times. Strictly adhering to this will ensure a much longer service life for your motorcycle.

The relevant mileage or time interval is whichever occurs first.

A list of services that have already been carried out on the vehicle can be found in the Service area on the international GASGAS website:

International GASGAS website: https://www.gasgas.com/

Authorized contractual partners will be happy to answer any questions regarding the services performed.

A list of authorized contractual partners can be found on the GASGAS website.

3.5 Figures

Some of the figures in this document contain optional extras.

For clarity, some components may be shown disassembled or may not be shown at all. Disassembly is not always absolutely necessary in order to carry out the activities described. The textual information takes precedence.

3.6 Customer service

Your authorized contractual partner will be happy to answer any questions you may have regarding your vehicle and GASGAS.

The list of authorized contractual partners can be found on the GASGAS website.

International GASGAS website: https://www.gasgas.com/

4.1 View of vehicle, front left (example)

1. Handbrake lever (p. 16)
2. Clutch lever (p. 16)
3. Fuel tank cap
4. Air filter box cover
5. Gear shift lever (p. 19)
6. Engine number (p. 14)

4.2 View of vehicle, rear right (example)

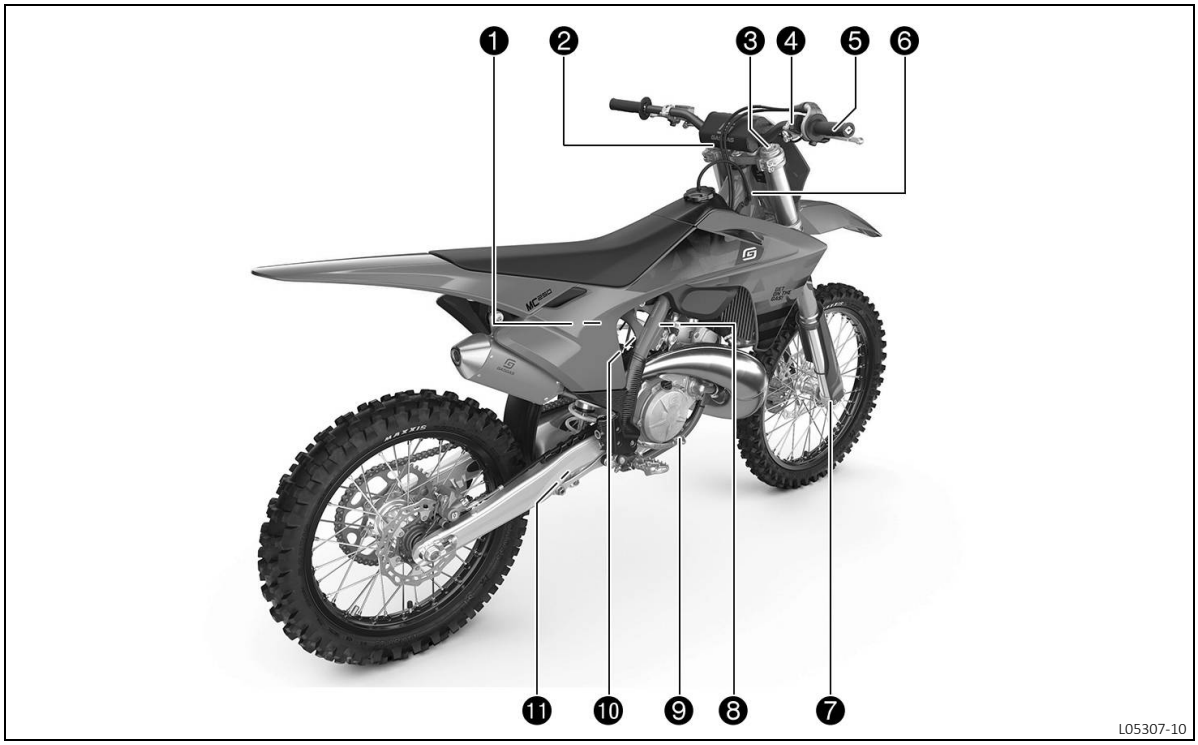

1. Shock absorber compression adjustment
2. Fork air pressure adjuster
3. Fork compression adjustment
4. Electric starter (p. 17)
4. Kill switch (p. 16)
5. Throttle grip (p. 16)
6. Vehicle identification number
7. Fork rebound adjustment
8. Idle speed adjustment screw (p. 19)
9. Brake pedal (p. 20)
10. Cold start button (p. 19)
11. Shock absorber rebound adjustment

5 Serial number

5.1 Vehicle identification number

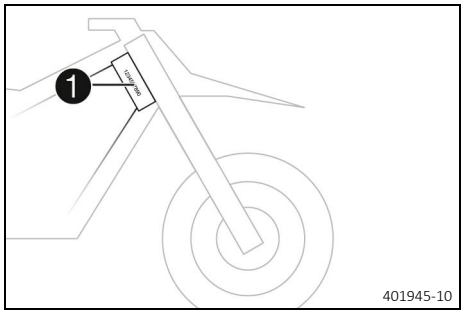

The vehicle identification number ❶ is stamped on the right-hand side of the steering head.

5.2 Frame label

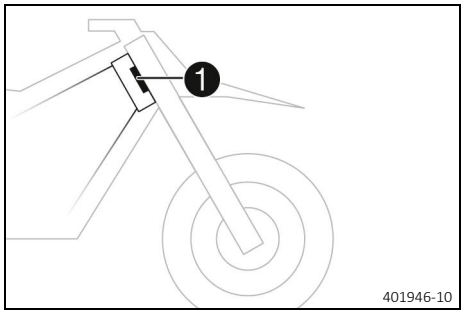

Frame label ❶ is attached to the front of the steering head.

5.3 Engine number

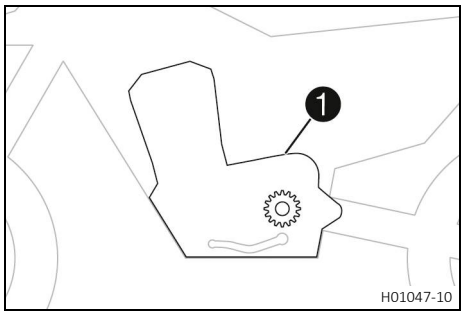

The engine number ❶ is stamped on the left side of the engine above the front sprocket.

5.4 Fork part number

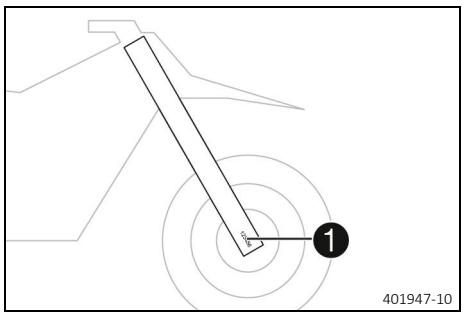

Fork part number ❶ is stamped on the inside of the fork shoe.

5.5 Shock absorber part number

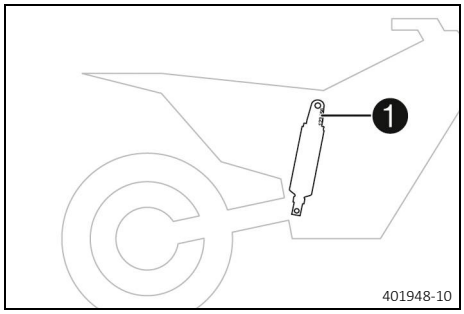

Shock absorber part number ❶ is stamped on the top right of the shock absorber.

6.1 Clutch lever

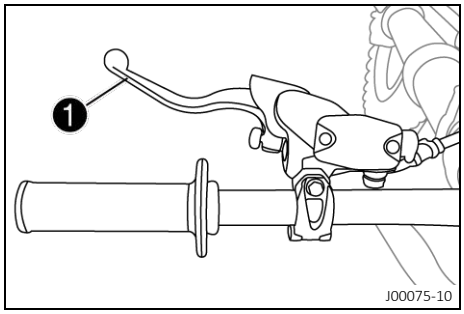

Clutch lever ❶ is fitted on the left side of the handlebar.
The clutch is activated hydraulically and adjusts itself automatically.

6.2 Handbrake lever

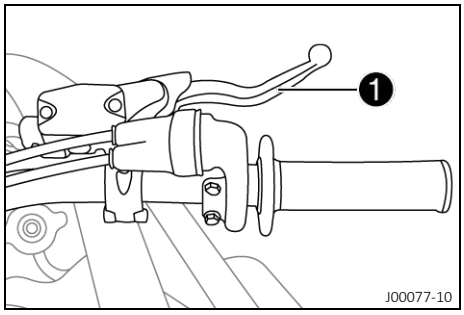

Hand brake lever ❶ is fitted on the right side of the handlebar.
The front brake is engaged using the hand brake lever.

6.3 Throttle grip

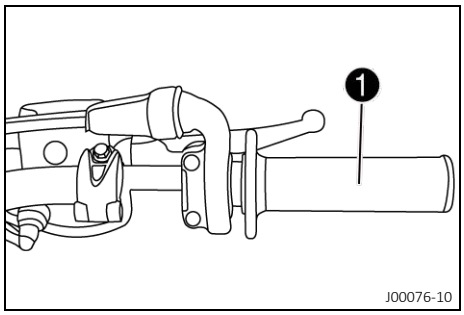

The throttle twist grip ❶ is fitted on the right side of the handlebar.

6.4 Kill switch

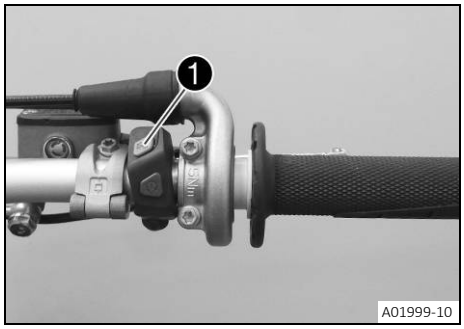

Kill switch ❶ is fitted on the right side of the handlebar.

Condition	Meaning
Kill button is not pressed.	In this position, the ignition circuit is closed, and the engine can be started.
The kill button is pressed and held.	In this position, the ignition circuit is interrupted, a running engine stops, and an engine at standstill will not start.

6.5 Electric starter

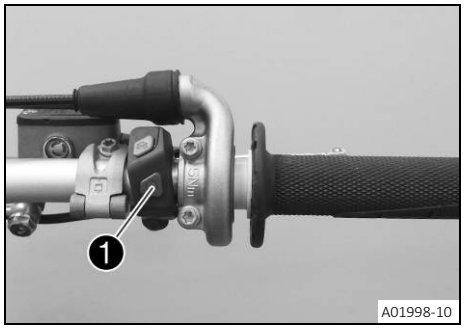

Electric starter ❶ is fitted on the right side of the handlebar.

Condition	Meaning
Electric starter in the basic position	No function.
Electric starter pressed.	In this position, the starter motor is actuated.

6.6 Overview of indicator lights

Condition		Meaning
Fi	Failure indicator lamp lights up or flashes red	The **OBD** has detected a malfunction in the vehicle electronics.
FUEL	**FUEL** is displayed	The fuel level has reached the reserve mark.

6.7 Dashboard

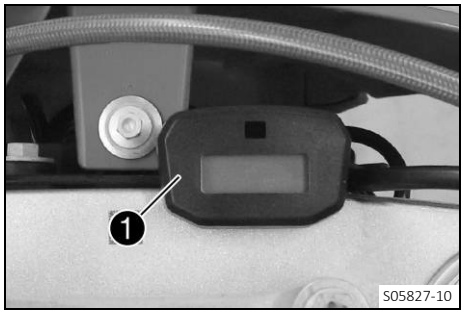

Dashboard ❶ is fitted in the front of the handlebar.

The dashboard shows the total operating hours of the engine.

The operating hours are counted when the engine is started and stopped when the engine is switched off.

Note

Nothing can be cleared or modified on the dashboard.

As soon as the diagnostics tool is connected, the hourmeter starts running.

Before longer diagnostic sessions, unplug the hourmeter behind the number plate.

6.8 Opening the fuel tank cap

DANGER

Fire hazard Fuel is highly flammable.

The fuel in the fuel tank expands when warm and can escape if overfilled.

- Do not refuel the vehicle in the vicinity of open flames, glowing, or smoldering objects.
- Make sure that nobody smokes in the vicinity of the vehicle during the refueling process.
- Switch off the engine for refueling.
- Make sure that no fuel is spilled; particularly not on hot parts of the vehicle.
- If any fuel is spilled, wipe it up immediately.
- Do not overfill the fuel tank.

WARNING

Danger of poisoning Fuel is harmful to health.

- Do not allow fuel to come into contact with skin, eyes, or clothing.
- Consult a doctor immediately if fuel has been ingested.
- Do not inhale fuel vapors.
- Rinse the affected area immediately with plenty of water in the event of contact with skin.
- Rinse eyes thoroughly with water and consult a doctor immediately if fuel comes into contact with eyes.
- If fuel spills on to your clothing, change the clothing.
- Store fuel properly in a suitable container and keep out of the reach of children.

NOTE

Environmental hazard Improper handling of fuel is dangerous to the environment.

- Do not allow fuel to enter the groundwater, the soil, or the sewage system.

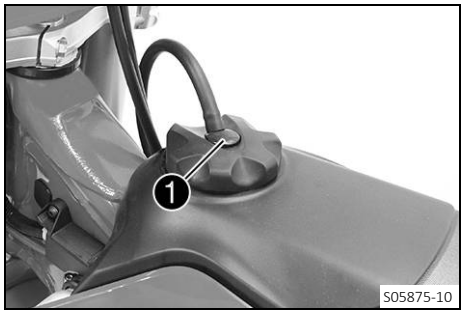

- Press release button ❶, turn the fuel tank cap counterclockwise, and lift it off.

6.9 Closing the fuel tank cap

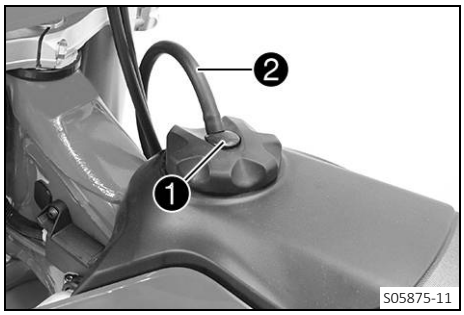

- Mount fuel tank cap ❶ and turn it clockwise until the fuel tank is tightly closed.

Route hose of fuel tank vent ❷ without kinks.

6.10 Cold start button

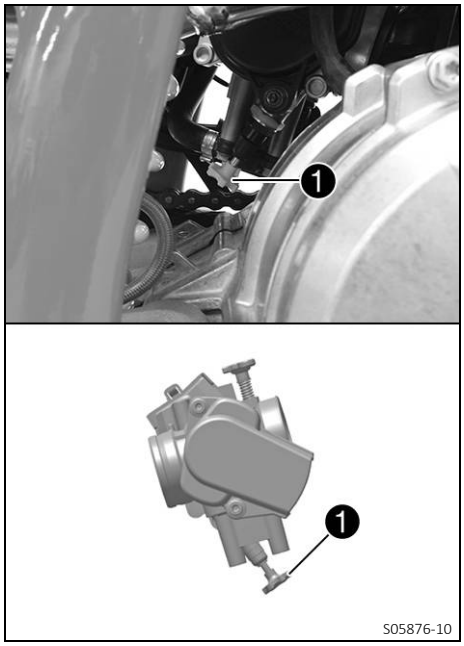

Cold start button 1 is fitted to the bottom of the throttle body.

The electronic fuel injection extends the injection time when the engine is cold and the ambient temperature is low. To help the engine burn the increased amount of fuel, it must be supplied with additional oxygen by pushing the cold start button.

After briefly opening up the throttle and then releasing the throttle twist grip again, or turning the throttle twist grip towards the front, the cold start button returns to its original position.

Note

Check whether the cold start button has returned to its basic position.

Condition	Meaning
The cold start button is pushed in all the way to the stop.	Cold start button activated
The cold start button is in the basic position.	Cold start button deactivated

6.11 Idle speed adjustment screw

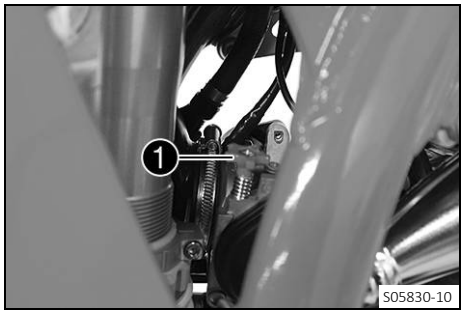

The idle setting of the throttle body substantially influences the vehicle's starting behavior, a stable idle speed, and the vehicle's response when the throttle is opened.

An engine with a correctly set idle speed is easier to start than an engine with the idle speed set incorrectly.

The idle speed is adjusted using idle speed adjustment screw 1.

Note

If the idle speed is high, the engine is slow to run, the engine brake is low and the throttle response is aggressive, the adjusting screw must be turned counterclockwise.

If the idle speed is low, the engine is running fast, the engine brake is high and the throttle response is not clean, the adjusting screw must be turned clockwise.

6.12 Gear shift lever

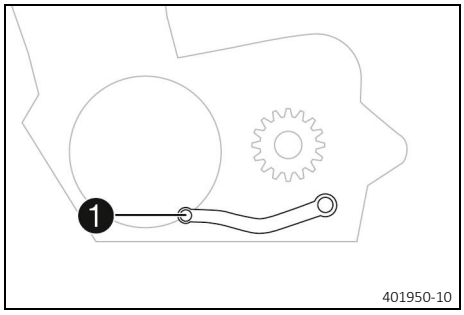

Gear shift lever 1 is mounted on the left of the engine.

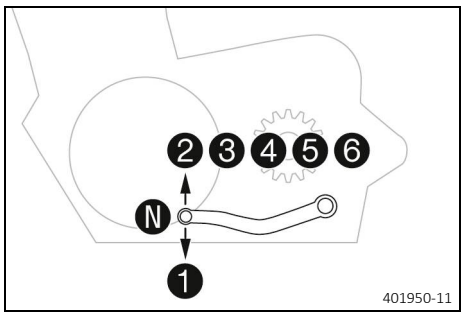

The gear positions can be seen in the figure.
The neutral or idle position is between the first and second gears.

6.13 Brake pedal

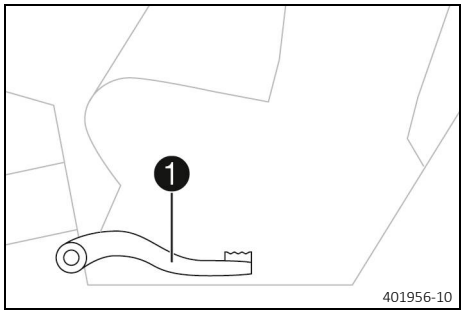

Brake pedal ❶ is located in front of the right footpeg.
The rear brake is operated with the brake pedal.

6.14 Side stand

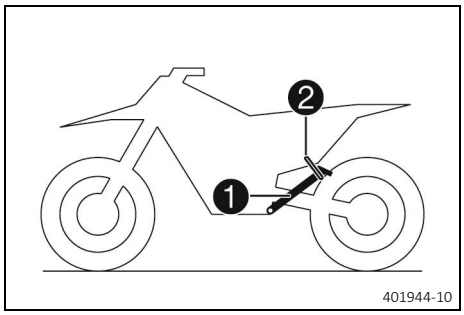

The side stand ❶ is located on the left of the vehicle.
The side stand is used for parking the motorcycle.

Note

When you are riding, side stand ❶ must be folded up and secured with rubber band ❷.

7.1 Notes on preparing for first use

DANGER
Danger of accidents A rider who is not fit to ride poses a danger to themself and to others.
– Do not operate the vehicle if you are not fit to ride due to alcohol, drugs, or medication.
– Do not operate the vehicle if you are physically or mentally incapable of doing so.

WARNING
Danger of accidents The vehicle is not designed to carry passengers.
– Do not ride with a passenger.

WARNING
Danger of accidents The brake system fails in the event of overheating.
If the brake pedal is not released, the brake pads grind continuously.
– Take your foot off the brake pedal when you are not braking.

WARNING
Danger of accidents Not adapting the riding style constitutes a major risk.
– Adapt the vehicle speed to the road conditions and your riding ability.

WARNING
Danger of accidents Total weight and axle loads influence the handling characteristic.
– Do not exceed the maximum permissible total weight or the axle loads.

WARNING
Risk of injury People who act without authorization endanger themselves and others.
– Never leave the vehicle unattended while the engine is running.
– Secure the vehicle against unauthorized access.

WARNING
Danger of accidents Different tire profiles on the front and rear wheels can make it more difficult to control the vehicle.
– Make sure that only tires of the same tread type are mounted to the front and rear wheel.

WARNING
Risk of injury Missing or inadequate protective clothing increases the risk of injury.
– Wear appropriate protective clothing such as helmet, boots, gloves as well as pants and a jacket with protectors on all rides.
– Always wear protective clothing that is in good condition and meets the legal regulations.

Note
When using the motorcycle, remember that others may be disturbed by excessive noise.

– Ensure that the pre-delivery inspection has been carried out by an authorized contractual partner.
  ✓ The delivery certificate is transferred upon vehicle handover.
– Read the entire owner's manual before riding for the first time.
– Get to know the controls.
– Adjust the basic position of the clutch lever. (p. 75)
– Adjust the basic position of the hand brake lever. (p. 78)
– Adjust the basic position of the brake pedal. (p. 84)
– Adjust the basic position of the gear shift lever. (p. 114)
– Get used to the handling characteristics of the motorcycle on suitable terrain before undertaking a more challenging ride.

Note
This vehicle is not approved for use on public roads.
When off-road, it is recommended that you be accompanied by another person with another vehicle so that you can help each other.

- Also, ride as slowly as possible and in a standing position to get a better feel for the motorcycle.
- Do not make any off-road trips that exceed your ability and experience.
- Hold the handlebar firmly with both hands and keep your feet on the footpegs when riding.
- Do not take any luggage.
- The maximum permissible total weight and the maximum permissible axle loads must not be exceeded.

Maximum permissible total weight	335 kg (738.5 lb)
Maximum permissible front axle load	145 kg (319.7 lb)
Maximum permissible rear axle load	190 kg (418.9 lb)

- Check the spoke tension. (p. 94)

The spoke tension must be checked after half an hour of operation.

- Run in the engine. (p. 22)

7.2 Running in the engine

- During the running-in time, do not exceed the specified engine power.

Maximum engine power	
during the first 3 operating hours	< 70 %
during the first 5 operating hours	< 100 %

Avoid fully opening the throttle.

- Check the idle speed regularly.

idle speed	1,500 rpm … 1,700 rpm (25.00 Hz … 28.33 Hz)

Note
The idle speed may change during the run-in time.

» If the idle speed changes:
  - Adjust the idle speed. (p. 113)

7.3 Starting performance of lithium-ion batteries at low temperatures

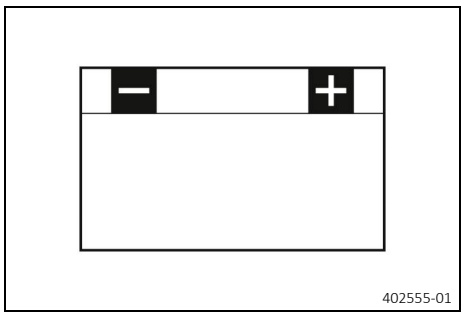

Lithium-ion batteries are far lighter than lead batteries, have a low self-discharge rate, and have more starting power at temperatures over 15 °C (60 °F). At low temperatures, however, the starting power of lithium-ion batteries drops to below that of lead batteries.

Several attempts to start may be required. Press the start button for 5 seconds, and wait 30 seconds between attempts. The pauses are necessary so that the heat created can be distributed through the lithium-ion battery without damaging the lithium-ion battery.

If the charged lithium-ion battery is unable to actuate the starter motor or does so only weakly at temperatures below 15 °C (60 °F), the battery is not faulty but needs to be warmed up internally to increase its starting power (current output).

The starting power increases as the battery warms up.

7.4 Preparing the vehicle for difficult operating conditions

Note

Use of the vehicle under difficult conditions, such as on sand or on wet and muddy surfaces, can result in significantly increased wear of components, such as the powertrain, brake system, or suspension components. For this reason, it may be necessary to inspect or replace parts before the next scheduled service interval.

- Prepare the air filter box cover for securing. (p. 62)
- Clean the air filter and air filter box. (p. 61)

  Check the air filter approx. every 30 minutes.
- Check the electrical socket connector for humidity and corrosion and to ensure it is firmly seated.
  - » If moisture, corrosion, or damage is found:
    - Clean and dry the socket connector, or change it if necessary.
- Riding on dry sand. (p. 23)
- Riding on wet sand. (p. 24)
- Rides on wet and muddy surfaces. (p. 25)
- Riding at high temperatures or slow speed. (p. 25)
- Riding at low temperatures and in snow. (p. 25)

7.5 Preparing the vehicle for rides on dry sand

- Mount the air filter dust protection.

  Read the accompanying mounting instructions.

  Air filter dust protection cover (A46006920000)

F03670-01

– Mount the air filter sand protection.

Read the accompanying mounting instructions.

Air filter sand protection (A46006922000)

600868-01

– Clean the chain.

Chain cleaner (p. 146)

– Mount the steel sprocket.
– Grease the chain.

Universal oil spray (p. 142)

– Clean the radiator fins.
– Straighten the bent radiator fins carefully.

Condition: Regular use in sand

– Change the piston every 10 operating hours.

7.6 Preparing the vehicle for rides on wet sand

F03668-01

– Mount the air filter water protection.

Read the accompanying mounting instructions.

Air filter water protection (A46006921000)

600868-01

– Clean the chain.

Chain cleaner (p. 146)

– Mount the steel sprocket.
– Grease the chain.

Universal oil spray (p. 142)

– Clean the radiator fins.
– Straighten the bent radiator fins carefully.

Condition: Regular use in sand

– Change the piston every 10 operating hours.

7.7 Preparing for rides on wet and muddy surfaces

F03668-01

– Mount the air filter water protection.

Read the accompanying mounting instructions.

Air filter water protection (A46006921000)

600868-01

– Mount the steel sprocket.
– Clean the motorcycle. (p. 121)
– Straighten the bent radiator fins carefully.

7.8 Preparing vehicle for rides at high temperature or slow speed

600868-01

– Adjust the secondary transmission to the road conditions.

Note
The engine oil quickly gets hot if the clutch has to be operated very often due to an excessively high secondary transmission.

– Clean the chain. (p. 68)
– Clean the radiator fins.
– Straighten the bent radiator fins carefully.
– Check the coolant level. (p. 107)

7.9 Preparing the vehicle for low temperatures or snow

F03668-01

– Mount the air filter water protection.

Read the accompanying mounting instructions.

Air filter water protection (A46006921000)

8.1 Checks and maintenance measures when preparing for use

Note
Before every trip, check the condition of the vehicle and ensure that it is safe to operate.
The vehicle must be in perfect technical condition when it is being operated.

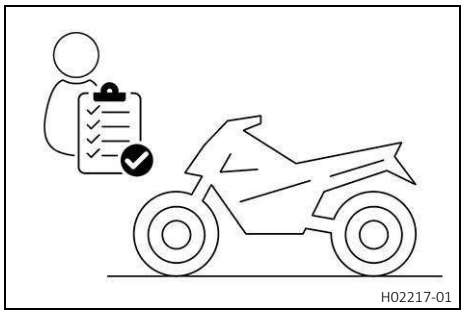

- Check the gear oil level. (p. 117)
- Check the brake fluid level for the front brake. (p. 79)
- Check the brake fluid level for the rear brake. (p. 85)
- Check that the brake pads of the front brake are secured. (p. 81)
- Check that the brake pads of the rear brake are secured. (p. 86)
- Check that the brake system is functioning properly.
- Check the coolant level. (p. 107)
- Check the chain for dirt. (p. 67)
- Check the chain, rear sprocket, engine sprocket, and chain guide. (p. 70)
- Check the chain tension. (p. 68)
- Check the tire condition. (p. 93)
- Check the tire pressure. (p. 94)
- Check the spoke tension. (p. 94)

  The spoke tension must be checked regularly as incorrect spoke tension will severely impair riding safety.
- Clean the dust boots of the fork legs. (p. 45)
- Bleed the fork legs. (p. 44)
- Check the air filter.
- Check the settings of all controls and ensure that they can be operated smoothly.
- Check all screws, nuts, and hose clamps regularly for tightness.
- Check the fuel level.

8.2 Starting the vehicle

DANGER
Danger of poisoning Exhaust gases are toxic and inhaling them may result in unconsciousness and death.
- Always ensure that there is sufficient ventilation when running the engine.
- Use suitable exhaust extraction when starting or running the engine in an enclosed space.

NOTE
Engine failure Running a cold engine at high engine speeds negatively impacts the service life of the engine.
- Always warm up the engine at low engine speeds.

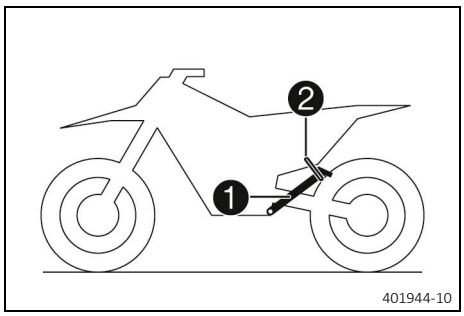

– Take the motorcycle off side stand ❶ and secure the side stand with rubber band ❷.
– Shift the transmission into the neutral position.

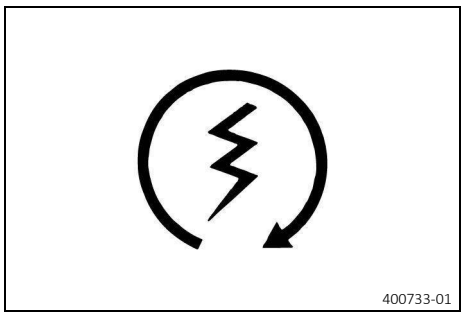

Condition: Ambient temperature: < 20 °C (< 68.0 °F)

– Press the cold start button in all the way to the stop.
– Deactivate the cold start button after approx. 10 seconds at high idle speed.

If the engine is warm, the cold start button must be deactivated.

– Press electric starter ⟲.

Press the electric starter for a maximum of 5 seconds.
Wait for 15 seconds before making another attempt at starting.
At low temperatures, wait for 30 seconds.
After 6 unsuccessful starting attempts, do not try again, and check the vehicle for other malfunctions instead.

Note
At temperatures below 6 °C (43 °F), several attempts at starting may be necessary to warm-up the lithium-ion battery and thereby increase the starting power.
The malfunction indicator light lights up during the starting process.

8.3 Starting off

Note
The plug-in stand must be removed before riding.
When you are riding, the side stand must be folded up and secured with the rubber band.

– Pull the clutch lever, shift into first gear, release the clutch lever slowly and at the same time carefully open the throttle.

8.4 Shifting, riding

WARNING
Engine failure The engine will not be lubricated unless there is 2-stroke oil in the oil tank.
If the oil level warning light lights up, the 2-stroke oil is sufficient for the remaining tank of fuel.
– As soon as the oil level warning light lights up, ride for no longer than until the remaining fuel in the tank is depleted.
– At the next opportunity add 2-stroke oil before you refuel.
– Time the oil pump if the 2-stroke oil hose has been removed or the 2-stroke oil tank has been fully depleted in error.

WARNING
Danger of accidents If you downshift at high engine speed, the rear wheel blocks and the engine races.
– Do not downshift to a lower gear at high engine speeds.

Note
If you hear unusual noises while riding, stop immediately, switch off the engine, and contact an authorized contractual partner.
First gear is used for starting off or for steep inclines.

– Shift into a higher gear when conditions allow (incline, riding situation, etc.). To do so, release the throttle while simultaneously pulling the clutch lever, shift into the next gear, release the clutch lever and open the throttle.
– If you pushed the cold start button while starting, open the throttle briefly and release the throttle twist grip or turn the throttle twist grip forward.
  ✓ The cold start button goes to the basic position.
– After reaching maximum speed by fully opening the throttle twist grip, turn the throttle back so that it is ¾ open. This will reduce the speed slightly, but the fuel consumption will be considerably lower.
– Only open the throttle as much as the engine can handle. Abruptly opening the throttle increases fuel consumption.
– To shift down, brake and close the throttle at the same time.
– Pull the clutch lever and shift into a lower gear, release the clutch lever slowly, and either open the throttle or shift again.
– Switch off the engine if you are likely to be running at idle speed or stationary for a long time.

≥ 1 min

– Avoid riding the clutch frequently or for too long. This causes the gear oil, engine, and cooling system to heat up.
– Ride at a low engine speed instead of at a high engine speed when riding the clutch.

8.5 Braking

WARNING
Danger of accidents A spongy pressure point on the front or rear brake reduces the brake action.
– Do not drive the vehicle if the brake system has a spongy pressure point.

WARNING
Danger of accidents Braking with excessive force locks the wheels.
– Adapt your braking to the riding situation and the road conditions.

WARNING
Danger of accidents Moisture and dirt impair the brake system.
– Brake carefully several times to dry out and remove dirt from the brake pads and the brake discs.

– On sandy, wet, or slippery surfaces, use mostly the rear brake.
– Always finish braking before you go into a bend. Shift into a lower gear that suits the speed.
– Use the brake action of the engine on long downhill stretches. Shift down one or two gears, but do not overrev the engine when doing so. This means that significantly less braking is required and means the brake system does not overheat.

8.6 Stop, park.

WARNING
Danger of burns Some vehicle components become hot when the vehicle is operated.
- Do not touch any parts such as the exhaust system, radiator, engine, damper, or brake system before the vehicle parts have cooled down.
- Allow the vehicle parts to cool down before performing any work on the vehicle.

WARNING
Risk of injury People who act without authorization endanger themselves and others.
- Never leave the vehicle unattended while the engine is running.
- Secure the vehicle against unauthorized access.

NOTE
Fire hazard Hot vehicle components pose a fire hazard and explosion risk.
- Do not park the vehicle near materials which are highly flammable or explosive.
- Allow the vehicle to cool down before covering it.

NOTE
Material damage The vehicle may be damaged if parked incorrectly.
Damage can occur if the vehicle rolls away or falls over.
The components for parking the vehicle are designed only for the weight of the vehicle.
- Park the vehicle on a firm and level surface.
- Make sure that nobody sits on the vehicle when it is parked on a stand.

- Brake the motorcycle.
- Shift the transmission into the neutral position.
- Press and hold kill button while the engine is idling until the engine stops.
- Rest the vehicle on the side stand.

8.7 Transportation

NOTE
Fire hazard Hot vehicle components pose a fire hazard and explosion risk.
- Do not park the vehicle near materials which are highly flammable or explosive.
- Allow the vehicle to cool down before covering it.

NOTE
Material damage The vehicle may be damaged if parked incorrectly.
Damage can occur if the vehicle rolls away or falls over.
The components for parking the vehicle are designed only for the weight of the vehicle.
- Park the vehicle on a firm and level surface.
- Make sure that nobody sits on the vehicle when it is parked on a stand.

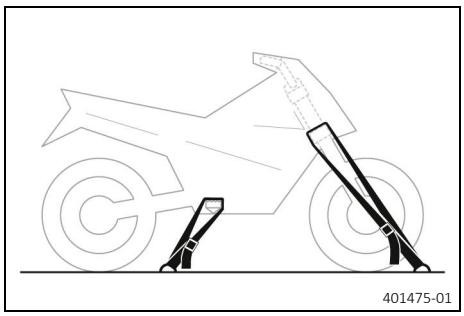

- Switch off the engine.
- Use tension belts or other suitable devices to secure the motorcycle against falling over or rolling away.

8.8 Refueling

DANGER

Fire hazard Fuel is highly flammable.

The fuel in the fuel tank expands when warm and can escape if overfilled.

- Do not refuel the vehicle in the vicinity of open flames, glowing, or smoldering objects.
- Make sure that nobody smokes in the vicinity of the vehicle during the refueling process.
- Switch off the engine for refueling.
- Make sure that no fuel is spilled; particularly not on hot parts of the vehicle.
- If any fuel is spilled, wipe it up immediately.
- Do not overfill the fuel tank.

WARNING

Danger of poisoning Fuel is harmful to health.

- Do not allow fuel to come into contact with skin, eyes, or clothing.
- Consult a doctor immediately if fuel has been ingested.
- Do not inhale fuel vapors.
- Rinse the affected area immediately with plenty of water in the event of contact with skin.
- Rinse eyes thoroughly with water and consult a doctor immediately if fuel comes into contact with eyes.
- If fuel spills on to your clothing, change the clothing.
- Store fuel properly in a suitable container and keep out of the reach of children.

NOTE

Environmental hazard Improper handling of fuel is dangerous to the environment.

- Do not allow fuel to enter the groundwater, the soil, or the sewage system.

- Switch off the engine.
- Open the fuel tank cap. (p. 18)

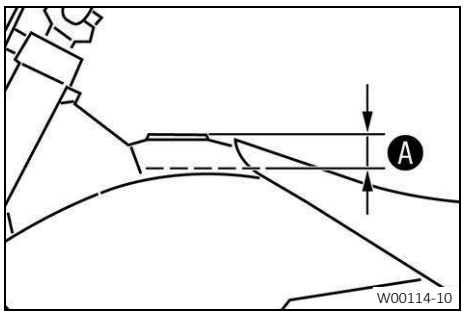

- Fill the fuel tank with fuel no higher than A.

Level A	35 mm (1.38 in)

Total fuel tank capacity, approx.	
Super unleaded (95 octane) mixed with 2-stroke engine oil (p. 144) Mixture ratio: 1:60	9 l (2.4 liq. gal_{US})

- Close the fuel tank cap. (p. 18)

9.1 Service schedule

Any further work that results from the service work must be ordered separately and invoiced separately.

Different service intervals may apply in your country, depending on the local operating conditions.

If the vehicle is used in particularly harsh conditions such as heavy rain, mud, sand, snow, extreme temperatures, frequent full load etc., shorter service intervals than those in the table may be necessary.

Individual service intervals and scopes may change in the course of technical developments. The most up-to-date service schedule is available for authorized contractual partners for the electronic proof of service. Your authorized contractual partner will be happy to advise you.

	After one operating hour	After 15 operating hours / Every 15 operating hours	Every 45 operating hours	Every 90 operating hours	Every 24 months
Read out the fault memory using the diagnostics tool.	○	●	●	●	●
Check that the electrical equipment is functioning properly.	○	●	●	●	
Check and charge the 12 V battery.	○	●	●	●	●
Check that the brake pads of the front brake are secured. (p. 81)	○	●	●	●	●
Check that the brake pads of the rear brake are secured. (p. 86)	○	●	●	●	●
Check the brake discs. (p. 78)	○	●	●	●	●
Check the brake lines for damage and tightness.	○	●	●	●	●
Check the brake fluid level for the front brake. (p. 79)	○	●	●		
Change the brake fluid for the front brake.				●	●
Check the brake fluid level for the rear brake. (p. 85)	○	●	●		
Change the brake fluid for the rear brake.				●	●
Check/correct the fluid level of the hydraulic clutch. (p. 75)			●		
Change the hydraulic clutch fluid. (p. 76)				●	●
Check the free travel on the hand brake lever. (p. 78)	○	●	●	●	●
Check the free travel of the brake pedal. (p. 84)	○	●	●	●	●
Check the idle speed.	○	●	●	●	●
Change the gear oil. (p. 118)	○	●	●	●	●
Check all hoses (e.g. fuel, cooling, bleeder, drainage, etc.) and boots for cracking, leaks, and correct routing.	○	●	●	●	●
Check the cables for damage and that there are no kinks in the routing.		●	●	●	●
Check that the clutch cables are undamaged, routed without kinks, and set correctly.		●	●	●	●
Check the frame. (p. 73)		●	●	●	
Check the swingarm. (p. 73)		●	●	●	
Check the swingarm bearing for play.			●	●	
Check the heim joint for play.			●	●	
Check the shock absorber linkage.		●	●	●	
Check the tire condition. (p. 93)		●	●	●	●
Check the tire pressure. (p. 94)	○	●	●	●	●

	After one operating hour	After 15 operating hours / Every 15 operating hours	Every 45 operating hours	Every 90 operating hours	Every 24 months
Check the wheel bearing for play.		●	●	●	
Check the hubs.		●	●	●	
Check the rim run-out.	○	●	●	●	
Check the spoke tension. (p. 94)	○	●	●	●	
Check the chain, rear sprocket, engine sprocket, and chain guide. (p. 70)	○	●	●	●	
Check the chain tension. (p. 68)	○	●	●	●	●
Grease all moving parts (e.g., hand lever, chain, etc.) and check for smooth operation.	○	●	●	●	●
Check the basic throttle valve position sensor setting.		○	●	●	●
Change the spark plug and spark plug connector.		●	●	●	
Change the fuel filter.				●	●
Check the clutch.		●	●	●	
Clean the air filter and air filter box. (p. 61)		●	●	●	●
Change the damping material on the main silencer. (p. 63)			●	●	
Carry out fork service.			●	●	
Service the shock absorber.			●	●	
Check all screws, nuts, and hose clamps for a tight fit.	○	●	●	●	●
Change the fuel screen. (p. 116)	○	●	●	●	●
Check the fuel pressure.	○		●	●	●
Check the frost protection and coolant level. (p. 106)			●	●	
Check the coolant level. (p. 107)	○	●			
Change the coolant. (p. 110)					●
Check the steering head bearing play. (p. 52)	○	●			
Lubricate the steering head bearing. (p. 53)			●	●	●
Check the starter drive.			●	●	●
Check the reed valve housing, diaphragm, and intake manifold.		●	●	●	
Perform minor engine service. (Change the piston. Check the cylinder head. Change the O-rings of the manifold and the cylinder head. Check the cylinder and Z-dimension. Clean the exhaust control. Check the exhaust control for function and smooth operation. Program the exhaust control end positions. Check the pressure sensor flange for cracks and damage.)		●	●	●	
Perform major engine service including removing and re-installing the engine. (Change the connecting rod, big (bottom) end bearing and crankshaft pin. Check the transmission and shift mechanism. Change all the engine bearings, the radial shaft seal rings, and the seals.)			●	●	
Final check: check vehicle for operating safety.	○	●	●	●	●
Take a test ride.	○	●	●	●	●
Read out the fault memory after the test ride using the diagnostics tool.	○	●	●	●	●
Enter the electronic proof of service in the contractual partner portal.	○	●	●	●	●

- ○ One-time interval
- ● Periodic interval

10.1 Checking the basic chassis setting with the rider's weight

Note
When adjusting the basic chassis setting, first adjust the shock absorber and then the fork.

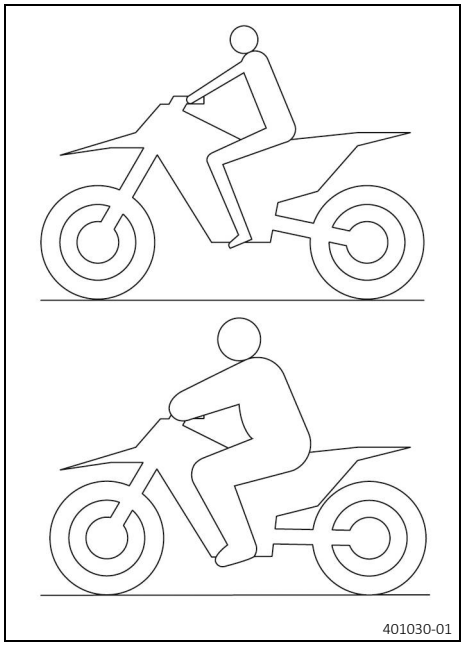

- For optimal motorcycle riding characteristics and to avoid damage to forks, shock absorbers, swingarm, and frame, the basic settings of the suspension components must match the rider's weight.
- As delivered, GASGAS offroad motorcycles are adjusted for an average rider's weight (with full protective clothing).

Standard rider's weight	75 kg … 85 kg (165.3 lb … 187.4 lb)

- If the rider's weight is above or below this range, the basic setting of the suspension components must be adjusted accordingly.
- Small weight differences can be compensated for by adjusting the preload, but in the case of large weight differences, the springs must be replaced.

10.2 Compression damping of the shock absorber

The compression damping of the shock absorber is divided into two ranges: high-speed and low-speed.
High-speed and low-speed refer to the compression speed of the rear wheel suspension and not to the vehicle speed.
The high-speed compression has an effect, for example, when landing after a jump: the rear wheel suspension compresses quickly.
The low-speed compression has an effect, for example, when riding over long bumps: the rear wheel suspension compresses slowly.
These two ranges can be adjusted separately, although the transition between high-speed and low-speed is floating. As a result, changes in the high-speed range affect the compression damping in the low-speed range and vice versa.

10.3 Adjusting the low-speed compression damping of the shock absorber

CAUTION
Risk of injury Parts of the shock absorber will move erratically if the shock absorber is detached incorrectly.
The shock absorber is filled with highly compressed nitrogen.
- Please follow the description provided.

Note
The effect of the low-speed compression adjustment can be seen in slow to normal compression of the shock absorber.

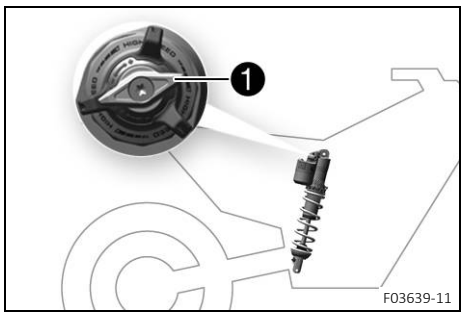

– Turn adjuster ❶ clockwise up to the last perceptible click.
– Turn counterclockwise by the number of clicks corresponding to the shock absorber type.

Low-speed compression damping	
Comfort	17 clicks
Standard	15 clicks
Sport	13 clicks

Note
Turning clockwise increases damping; turning anticlockwise reduces damping.

10.4 Adjusting the high-speed compression damping of the shock absorber

CAUTION
Risk of injury Parts of the shock absorber will move erratically if the shock absorber is detached incorrectly.
The shock absorber is filled with highly compressed nitrogen.
– Please follow the description provided.

Note
The effect of the high-speed compression adjustment can be seen in the fast compression of the shock absorber.

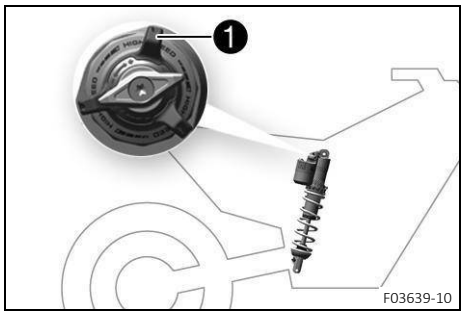

– Turn adjuster ❶ clockwise all the way to the stop.
– Turn counterclockwise by the number of turns corresponding to the shock absorber type.

High-speed compression damping	
Comfort	2 turns (720°)
Standard	1.5 turns (540°)
Sport	1 turn (360°)

Note
Turning clockwise increases damping; turning anticlockwise reduces damping.

10.5 Adjusting the rebound damping of the shock absorber

CAUTION
Risk of injury Parts of the shock absorber will move erratically if the shock absorber is detached incorrectly.
The shock absorber is filled with highly compressed nitrogen.
– Please follow the description provided.

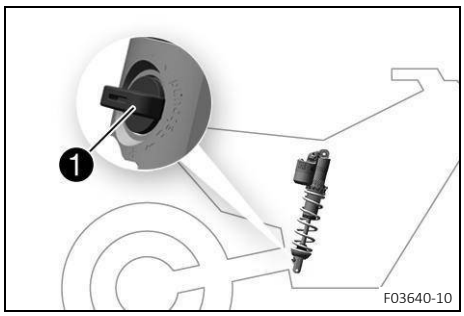

– Turn adjuster 1 clockwise up to the last perceptible click.
– Turn counterclockwise by the number of clicks corresponding to the shock absorber type.

Rebound damping	
Comfort	17 clicks
Standard	15 clicks
Sport	13 clicks

Note
Turning clockwise increases damping; turning anticlockwise reduces damping on rebound.

10.6 Measuring the dimension of the unloaded rear wheel

Preparatory work

– Raise the motorcycle with a lift stand. (p. 44)

Main work

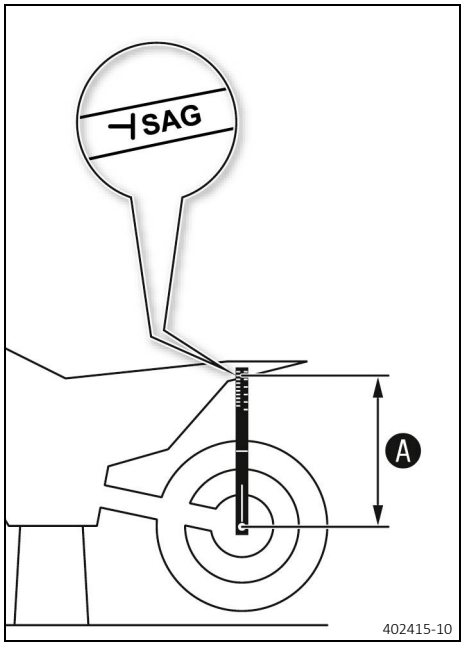

– Position the sag scale in the rear axle and measure the distance to **SAG** marking on the rear fender.

Sag scale (00029090200)

– Note the value as dimension A.

Reworking

– Remove the motorcycle from the lift stand. (p. 44)

10.7 Checking the static sag of the shock absorber

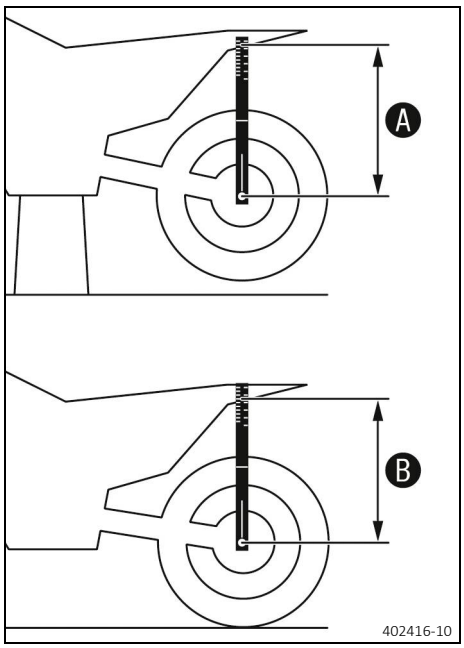

- Determine rear wheel dimension A. (p. 36)
- Hold the motorcycle upright with aid of an assistant.
- Measure the distance again between the rear axle and marking **SAG** on the rear fender using the sag gage.
- Note the value as dimension B.

Note

The static sag is the difference between measurements A and B.

- Check the static sag.

Static sag	35 mm (1.38 in)

» If the static sag is more or less than the specified value:
  - Adjust the preload for the shock absorber. (p. 38)

10.8 Checking the rider sag of the shock absorber

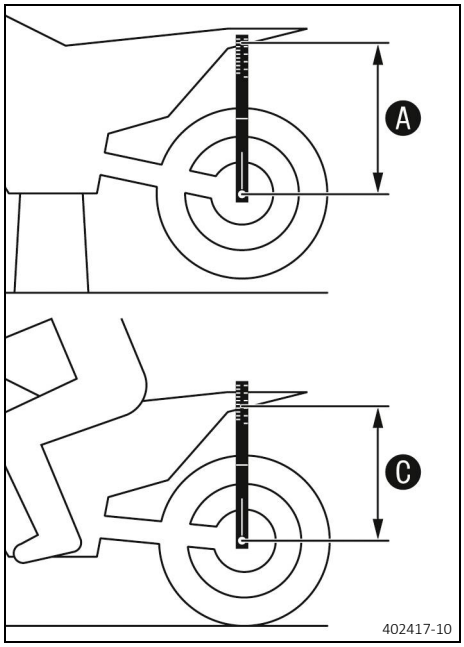

- Determine rear wheel dimension A. (p. 36)
- With another person holding the motorcycle, sit on the saddle with full protective clothing in a normal sitting position (feet on footrests) and bounce up and down a few times.
  ✓ The rear wheel suspension levels out.
- Another person again measures the distance between the rear axle and marking **SAG** on the rear fender using the sag gage.
- Note the value as dimension C.

Note

The rider sag is the difference between measurements A and C.

- Check the rider sag.

Rider sag	105 mm (4.13 in)

» If the rider sag differs from the specified measurement:
  - Adjust the rider sag. (p. 39)

10.9 Adjusting the preload for the shock absorber

CAUTION
Risk of injury Parts of the shock absorber will move erratically if the shock absorber is detached incorrectly. The shock absorber is filled with highly compressed nitrogen.
– Please follow the description provided.

Note
Before changing the preload, make a note of the present setting, e.g., by measuring the spring length.

Preparatory work
– Remove the frame protector. (p. 47)
– Remove the right side panel. (p. 46)
– Remove the muffler. (p. 62)
– Raise the motorcycle with a lift stand. (p. 44)
– Remove the shock absorber. (p. 55)
– After removing the shock absorber, clean it thoroughly.

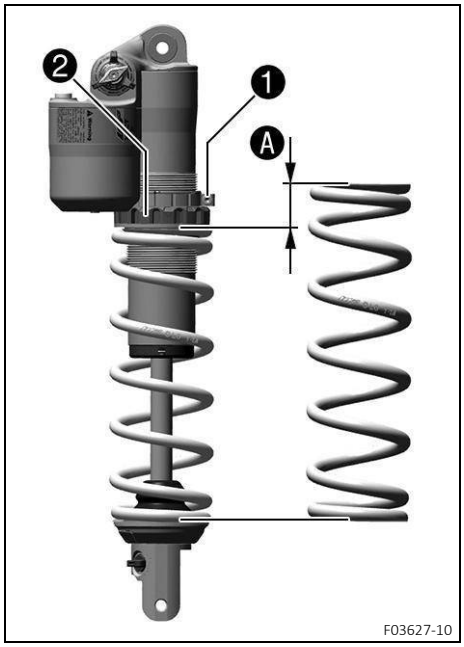

Main work
– Loosen screw 1.
– Turn adjusting ring 2 until the spring is no longer under tension.

Hook wrench (90129051000)

Note
If the spring cannot be fully released, the spring must be removed to accurately measure the spring length.

– Measure the total spring length while the spring is not under tension.
– Tension the spring by turning adjusting ring 2 to specified dimension A.

Preload	8 mm (0.31 in)

Note
Depending on the static sag and/or the rider sag, it may be necessary to increase or decrease the spring preload.

– Tighten screw 1.

Screw, shock absorber adjusting ring	
M5×20	5 Nm (3.7 ft·lb_f)

Make sure that the adjusting ring does not touch any other components when installed.

Reworking

- Install the shock absorber. (p. 56)
- Install the muffler. (p. 63)
- Install the right side panel. (p. 47)
- Install the frame protector. (p. 47)
- Check the free travel of the brake pedal. (p. 84)
- Remove the motorcycle from the lift stand. (p. 44)

10.10 Adjusting the rider sag

Preparatory work

- Remove the frame protector. (p. 47)
- Remove the right side panel. (p. 46)
- Remove the muffler. (p. 62)
- Raise the motorcycle with a lift stand. (p. 44)
- Remove the shock absorber. (p. 55)
- After removing the shock absorber, clean it thoroughly.

Main work

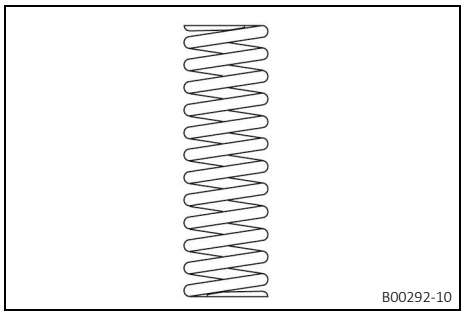

- Select and mount a suitable spring.

Spring rate	
Weight of rider: 65 kg … 75 kg (143.3 lb … 165.3 lb)	42 N/mm (239.8 lb_f/in)
Weight of rider: 75 kg … 85 kg (165.3 lb … 187.4 lb)	45 N/mm (257.0 lb_f/in)
Weight of rider: 85 kg … 95 kg (187.4 lb … 209.4 lb)	48 N/mm (274.1 lb_f/in)

Note
The spring rate is shown on the outside of the spring.

Reworking

- Install the shock absorber. (p. 56)
- Install the muffler. (p. 63)
- Install the right side panel. (p. 47)
- Install the frame protector. (p. 47)
- Check the free travel of the brake pedal. (p. 84)
- Remove the motorcycle from the lift stand. (p. 44)
- Check the static sag of the shock absorber. (p. 37)
- Check the rider sag of the shock absorber. (p. 37)
- Adjust the rebound damping of the shock absorber. (p. 35)

10.11 Checking the basic setting of the fork

Note
For various reasons, no exact rider sag can be determined for the fork.

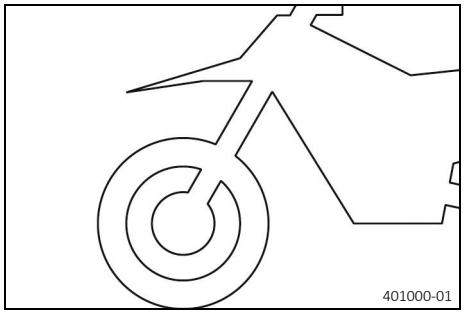

- Smaller differences in the rider's weight can be compensated for by the fork air pressure.
- However, if the fork frequently bottoms out (hard end stop on compression), the fork air pressure must be increased, within the specified values, to avoid damage to the fork and frame.
- If the fork feels unusually hard after extended periods of operation, the fork legs need to be bled.

10.12 Adjusting the compression damping of the fork

Note
The hydraulic compression damping determines the fork suspension behavior.

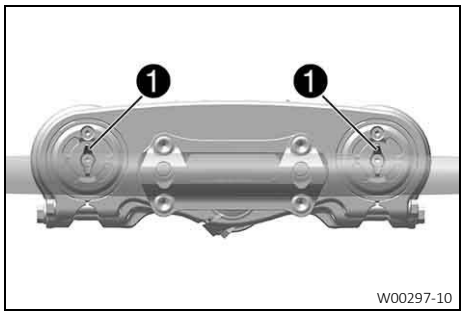

- Turn adjusters 1 clockwise all the way to the stop.

Make the same adjustment on both fork legs.

Note
Adjusters 1 are located at the top ends of the fork legs.

- Turn counterclockwise by the number of clicks corresponding to the fork type.

Compression damping	
Comfort	17 clicks
Standard	12 clicks
Sport	7 clicks

Note
Turning clockwise increases damping; turning counterclockwise reduces damping during compression.

10.13 Adjusting the rebound damping of the fork

Note
The hydraulic rebound damping determines the fork suspension behavior.

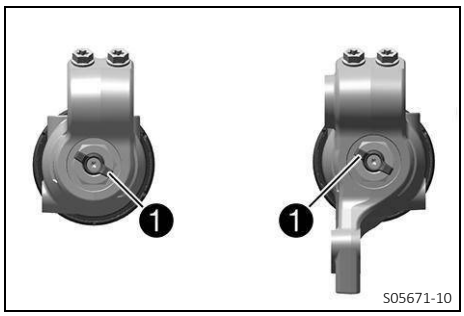

– Turn adjusters 1 clockwise all the way to the stop.

Make the same adjustment on both fork legs.

Note
Adjusters 1 are located at the bottom end of the fork legs.

– Turn counterclockwise by the number of clicks corresponding to the fork type.

Rebound damping	
Comfort	23 clicks
Standard	18 clicks
Sport	13 clicks

Note
Turning clockwise increases damping; turning anticlockwise reduces damping on rebound.

10.14 Handlebar position

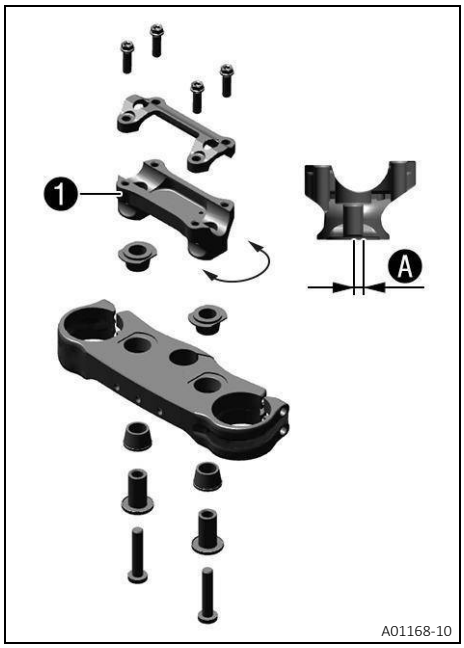

The holes on handlebar mount 1 are placed at a distance of A from the center.

Hole distance A	3.5 mm (0.138 in)

The handlebar can be mounted in 2 different positions. This allows the handlebar to be mounted in the most comfortable position for the rider.

Note
In addition, the handlebar can be mounted rigidly or on a rubber support.

10.15 Adjusting the handlebar position

WARNING
Danger of accidents A repaired handlebar poses a safety risk.
If the handlebar is bent or straightened, the material becomes fatigued. The handlebar may break as a result.
– Change the handlebar if the handlebar is damaged or bent.

Note
The handlebar can be mounted rigidly or on a rubber bearing.

Preparatory work

– Remove the handlebar pad.

Main work

– Remove screws ❶. Take off handlebar clamp ❷. Remove the handlebar and lay it to one side.

Protect the components against damage by covering them.
Do not kink the cables or lines.

– Remove screws ❼ and bushing ❻. Take off handlebar support ❸.

– Select one of the following alternatives.

Adjusting the handlebar position with handlebar clamp with rubber bushings

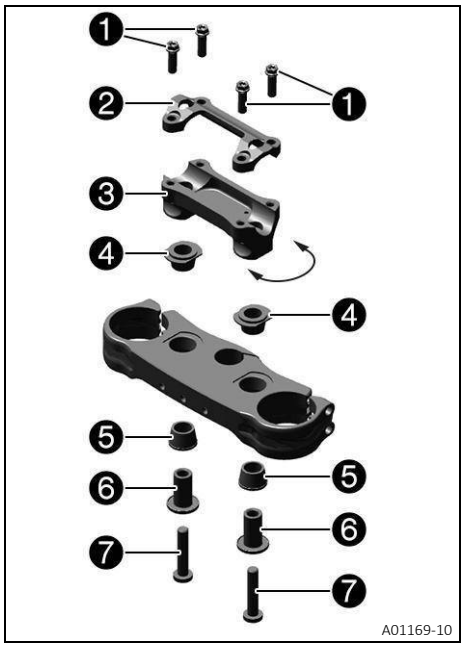

– Position the rubber bushings ❹ and ❺.
– Place the handlebar mount in the required position.

Note
The handlebar mount is longer and higher on one side.

– Mount and tighten the screws ❼ with bushing ❻.

Screw, handlebar mount	
M10×50	40 Nm (29.5 ft·lb$_f$) **Loctite® 243**

– Position the handlebar.

Make sure the cables and wiring are positioned correctly.

– Position handlebar clamp ❷.
– Mount screws ❶, but do not tighten yet.
– First bolt the handlebar clamp with screws ❶ onto the longer, higher side of the handlebar support so that both parts touch.
– Tighten screws ❶ evenly.

Screw, handlebar clamp	
M8×25	20 Nm (14.8 ft·lb$_f$)

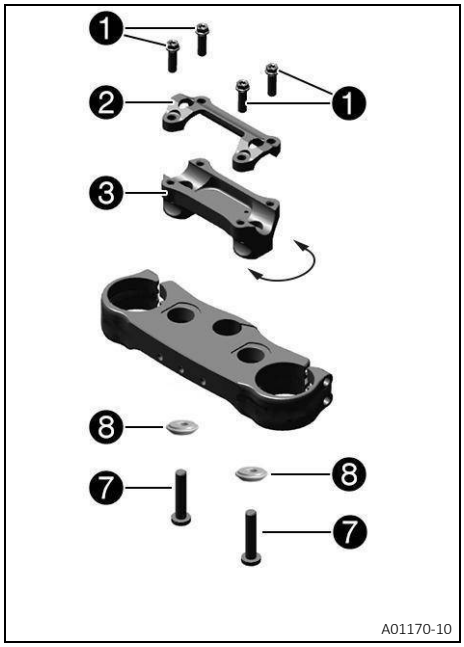

Adjusting the handlebar position with the rigid handlebar clamp

– Place the handlebar support ❸ in the required position.

> **Note**
> The handlebar mount is longer and higher on one side.

– Mount and tighten the screws ❼ with the bushings ❽.

Screw, handlebar mount	
M10×50	40 Nm (29.5 ft·lb$_f$) **Loctite® 243**

Rigid handlebar clamp bushing (A46001038010)

✓ The conical side of the bushing faces downward.

– Position the handlebar.

Make sure the cables and wiring are positioned correctly.

– Position handlebar clamp ❷.
– Mount screws ❶, but do not tighten yet.
– First bolt the handlebar clamp with screws ❶ onto the longer, higher side of the handlebar support so that both parts touch.
– Tighten screws ❶ evenly.

Screw, handlebar clamp	
M8×25	20 Nm (14.8 ft·lb$_f$)

Reworking

– Mount the handlebar pad.

11.1 Raising the motorcycle with a lift stand

NOTE

Material damage The vehicle may be damaged if parked incorrectly.

Damage can occur if the vehicle rolls away or falls over.

The components for parking the vehicle are designed only for the weight of the vehicle.

- Park the vehicle on a firm and level surface.
- Make sure that nobody sits on the vehicle when it is parked on a stand.

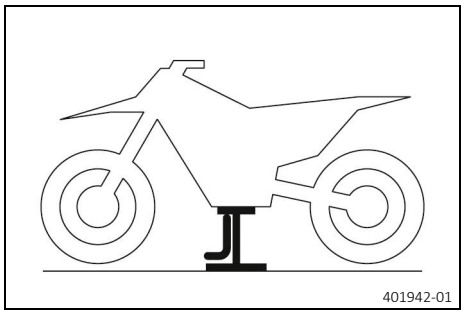

- Raise the motorcycle at the frame underneath the engine.

  Lift stand (81329955100)

  ✓ Neither wheel is in contact with the ground.
- Secure the motorcycle against falling over.

11.2 Removing the motorcycle from the lift stand

NOTE

Material damage The vehicle may be damaged if parked incorrectly.

Damage can occur if the vehicle rolls away or falls over.

The components for parking the vehicle are designed only for the weight of the vehicle.

- Park the vehicle on a firm and level surface.
- Make sure that nobody sits on the vehicle when it is parked on a stand.

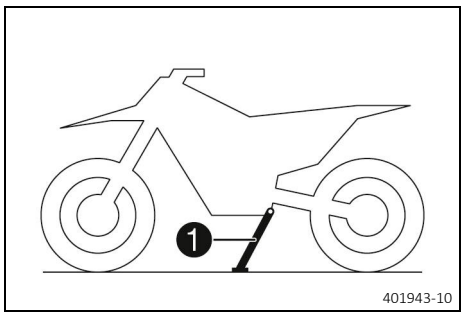

- Remove the motorcycle from the lift stand.
- Remove the lift stand.
- To park the motorcycle, press side stand 1 to the ground with your foot and lean the motorcycle on it.

  When you are riding, the side stand must be folded up and secured with the rubber band.

11.3 Bleeding the fork legs

Preparatory work

- Raise the motorcycle with a lift stand. (p. 44)

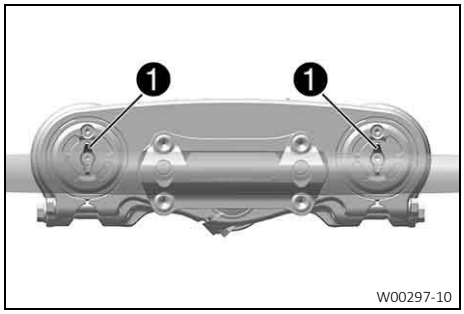

Main work

– Loosen bleeder screw 1.
  ✓ Any excess pressure escapes from the inner fork.
– Tighten the bleeder screw.

Reworking

– Remove the motorcycle from the lift stand. (p. 44)

11.4 Cleaning the dust boots of the fork legs

Preparatory work

– Raise the motorcycle with a lift stand. (p. 44)
– Remove the fork protector. (p. 46)

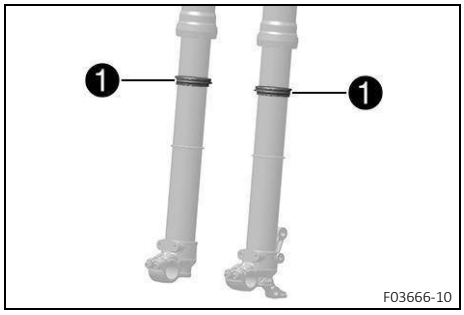

Main work

– Push dust boot 1 downward on both fork legs.

Note
The dust boots should remove dust and coarse dirt particles from the inner fork tubes. Over time, dirt can accumulate behind the dust boots. If this dirt is not removed, the oil seals behind can start to leak.

WARNING
Danger of accidents Oil, grease or wax on the brake discs reduces the brake action.
– Always keep the brake discs free of oil, fat and wax.
– Clean the brake discs with brake cleaner when necessary.

– Clean and oil the dust boots and the inner fork tube of both fork legs.

Universal oil spray (p. 142)

– Press the dust boots back into their installation position.
– Remove excess oil.

Reworking

– Install the fork protector. (p. 46)
– Remove the motorcycle from the lift stand. (p. 44)

11.5 Removing the fork protector

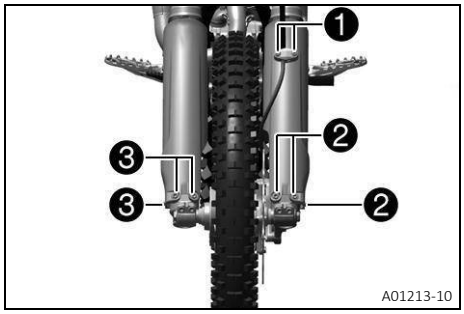

- Remove screws ❶ on the left fork leg.
- Take off the clamp.
- Remove screws ❷ on the left fork leg.
- Take off the left fork protector.
- Remove screws ❸ on the right fork leg.
- Remove the right fork protector.

11.6 Installing the fork protector

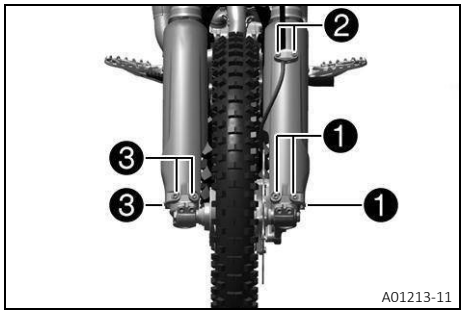

- Position the fork protector on the left fork leg.
- Mount and tighten screws ❶.

Remaining screws on chassis	
M6	10 Nm (7.4 ft·lb$_f$)

- Position the brake line and the clamp.
- Mount and tighten screws ❷.

Remaining screws on chassis	
EJOT PT® – K60×25 – Z	2 Nm (1.5 ft·lb$_f$)

- Position the fork protector on the right fork leg.
- Mount and tighten screws ❸.

Remaining screws on chassis	
M6	10 Nm (7.4 ft·lb$_f$)

11.7 Removing the right side panel

Preparatory work

- Remove the frame protector. (p. 47)

Main work

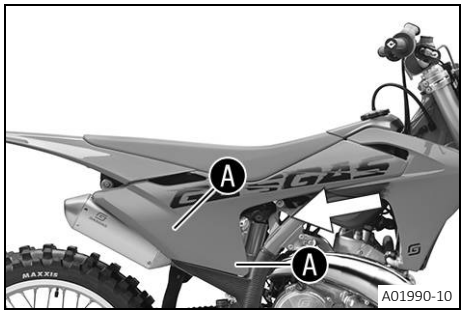

- Pull the right side panel off sideways in areas Ⓐ and remove toward the rear.

11.8 Installing the right side panel

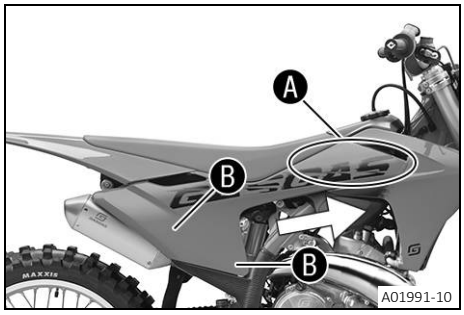

Main work

- Slide right side panel forward and hook into area A.
- Attach side panel in areas B.

Ensure that the side panel is correctly hooked in to areas A and B.

Reworking

- Install the frame protector. (p. 47)

11.9 Removing the frame protector

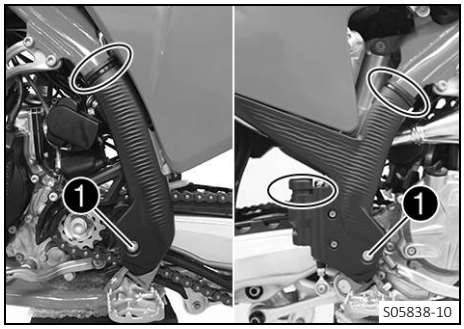

- Remove the cable ties.
- Remove screws 1 and bushings.
- Take off the left frame protector.
- Push the right frame protector to the front and take off at the bottom.

11.10 Installing the frame protector

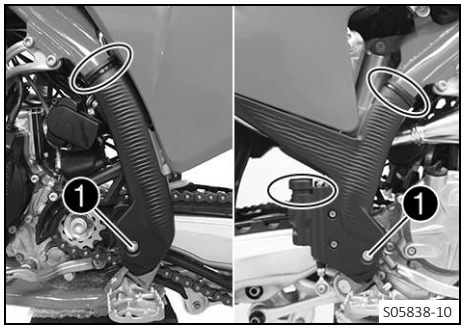

- Position the left frame protector.
- Insert the right frame protector from below and push it to the rear.
- Mount screw 1 and bushing and tighten.

Screw, frame protector	
M5×10	3 Nm (2.2 ft·lb$_f$)

- Secure the frame protector with cable ties.

Turn the head of the cable tie so far back that it does not touch any other components.

11.11 Removing the fork legs

Preparatory work

– Raise the motorcycle with a lift stand. (p. 44)
– Remove the front wheel. (p. 90)

Main work

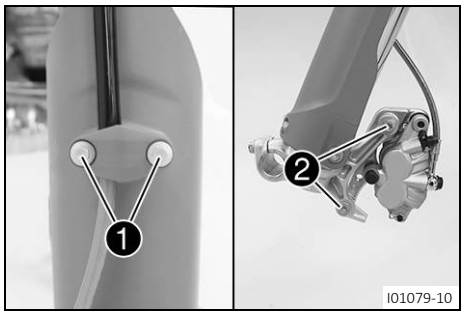

– Remove screw ❶ and take off the clamp.
– Remove screws ❷ and take off the brake caliper.
– Allow the brake caliper and the brake line to hang loosely to the side.

Do not actuate the hand brake lever when the front wheel is removed.

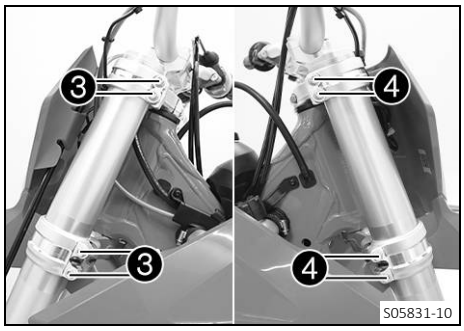

– Loosen screws ❸.
– Remove the left fork leg.
– Loosen screws ❹.
– Remove the right fork leg.

11.12 Installing the fork legs

Main work

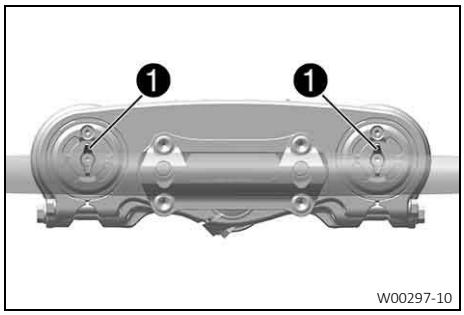

– Position the fork legs.
  ✓ Bleeder screws ❶ of both fork legs are positioned toward the front.

Note
Grooves are milled into the side of the upper end of the fork legs. The second milled groove (from the top) must be flush with the upper edge of the upper triple clamp.

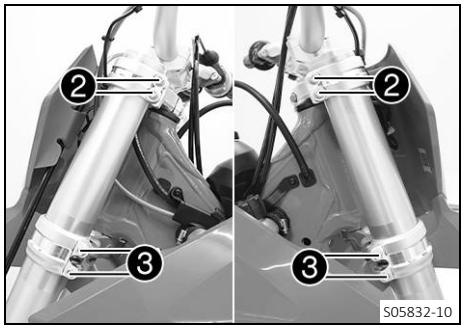

– Tighten screws ❷.

Screw, top triple clamp	
M8×40	20 Nm (14.8 ft·lb_f)

– Tighten screws ❸.

Screw, bottom triple clamp	
M8×50	15 Nm (11.1 ft·lb_f)

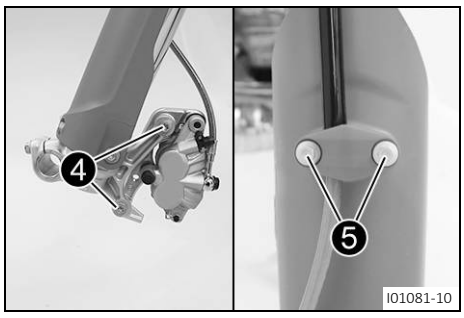

– Position the brake caliper.
– Mount and tighten screws ❹.

Screw, front brake caliper	
M8×30	25 Nm (18.4 ft·lb$_f$) **Loctite® 243**

– Position the brake line and the clamp.
– Mount and tighten screws ❺.

Remaining screws on chassis	
EJOT PT® – K60×25 – Z	2 Nm (1.5 ft·lb$_f$)

Reworking

– Install the front wheel. (p. 91)

11.13 Removing the lower triple clamp

Preparatory work

– Raise the motorcycle with a lift stand. (p. 44)
– Remove the front wheel. (p. 90)
– Remove the fork legs. (p. 48)
– Remove the number plate. (p. 53)
– Remove the front top fender. (p. 54)
– Remove the handlebar pad.

Main work

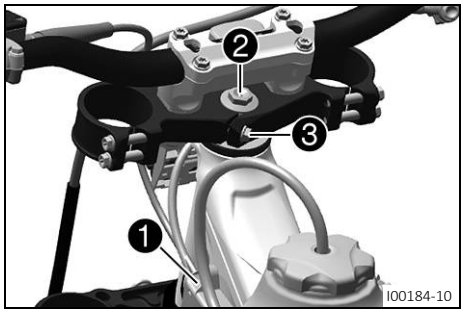

– Remove screw ❶.
– Detach the wiring harness.
– Remove screw ❷.
– Remove screw ❸.
– Take off the upper triple clamp with the handlebar and place to one side.

Protect the components against damage by covering them.
Do not kink the cables or lines.

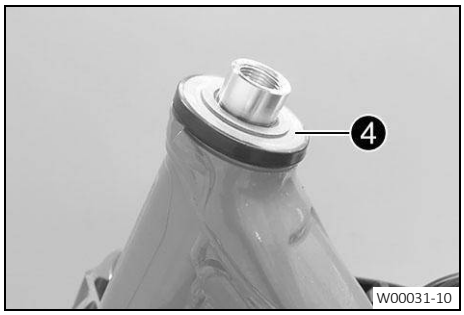

– Remove steering head seal ❹.
– Remove the steering stem from the lower triple clamp.
– Remove the upper steering head bearing.

11.14 Installing the lower triple clamp

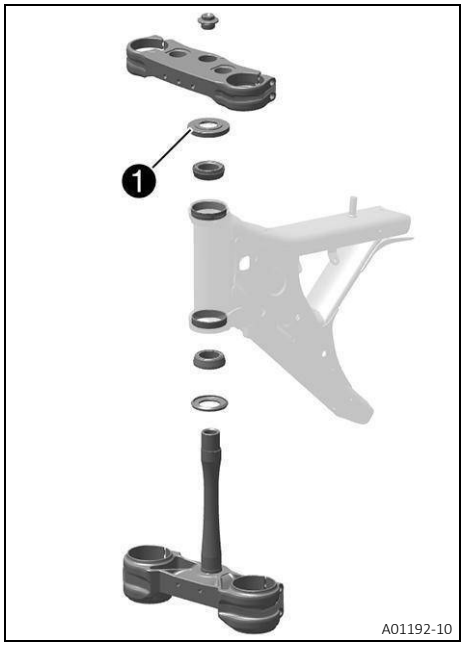

Main work

– Clean the bearing and sealing elements, check for damage, and grease.

High viscosity grease (p. 142)

– Insert the lower triple clamp with the steering stem. Mount the upper steering head bearing.

– Push on steering head seal 1.

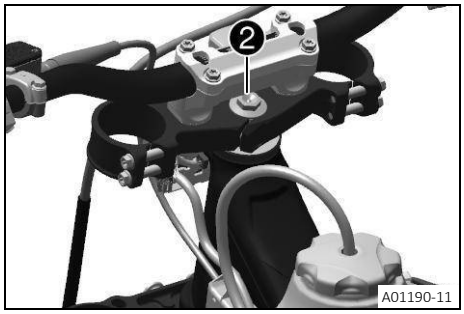

– Position the upper triple clamp and handlebar.

– Mount screw 2, but do not tighten it yet.

Screw, top steering head	
M20×1.5	12 Nm (8.9 ft·lb_f)

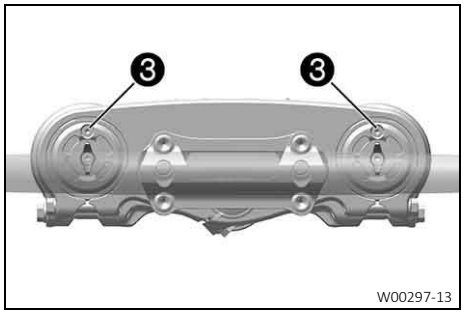

– Position the fork legs.

✓ Bleeder screws 3 of the fork legs are positioned toward the front.

Note

Grooves are milled into the side of the upper end of the fork legs. The second milled groove (from the top) must be flush with the upper edge of the upper triple clamp.

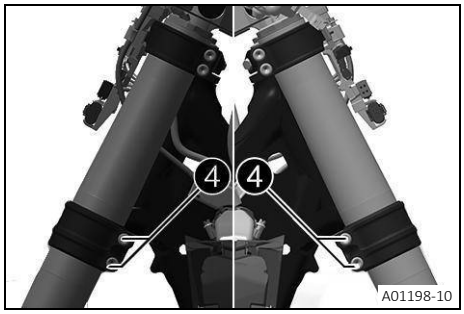

– Tighten screws 4.

Screw, bottom triple clamp	
M8×50	15 Nm (11.1 ft·lb_f)

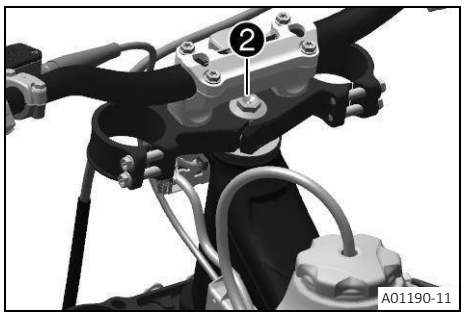

– Tighten screw ❷.

Screw, top steering head	
M20×1.5	12 Nm (8.9 ft·lb$_f$)

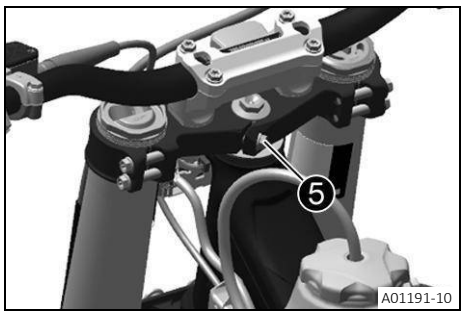

– Mount and tighten screw ❺.

Screw, upper steering stem	
M8×25	20 Nm (14.8 ft·lb$_f$) **Loctite® 243**

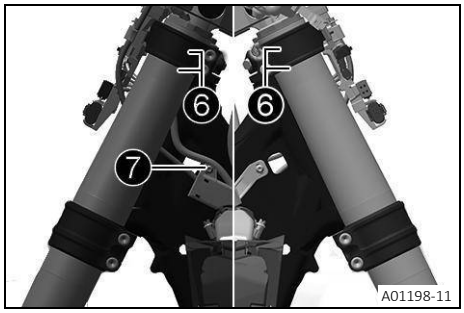

– Using a plastic hammer, tap lightly on the upper triple clamp to avoid stresses.
– Tighten screws ❻.

Screw, top triple clamp	
M8×40	20 Nm (14.8 ft·lb$_f$)

– Secure the wiring harness with the left cable bracket. Mount and tighten screw ❼.

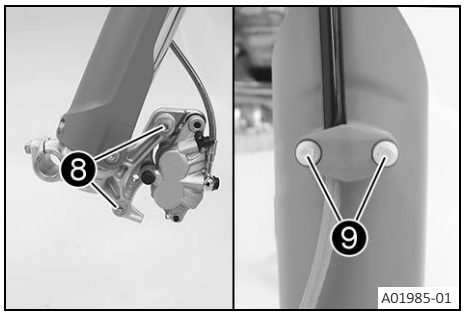

– Position the brake caliper. Mount and tighten screws ❽.

Screw, front brake caliper	
M8×30	25 Nm (18.4 ft·lb$_f$) **Loctite® 243**

– Position the brake line and the clamp. Mount and tighten screws ❾.

Remaining screws on chassis	
EJOT PT® – K60×25 – Z	2 Nm (1.5 ft·lb$_f$)

Reworking

– Install the front top fender. (p. 54)
– Mount the handlebar pad.
– Mount the number plate. (p. 54)
– Install the front wheel. (p. 91)
– Check the wiring harness, cables, and brake and clutch lines for freedom of movement and correct routing.

– Check the steering head bearing play. (p. 52)
– Remove the motorcycle from the lift stand. (p. 44)

11.15 Checking the steering head bearing play

WARNING
Danger of accidents Incorrect steering head bearing play can impair the handling characteristic and damage components.
– Correct incorrect steering head bearing play immediately.

Note
If the vehicle is operated for a lengthy period with play in the steering head bearing, the bearings and the bearing seats in the frame can become damaged.

Preparatory work
– Raise the motorcycle with a lift stand. (p. 44)

Main work

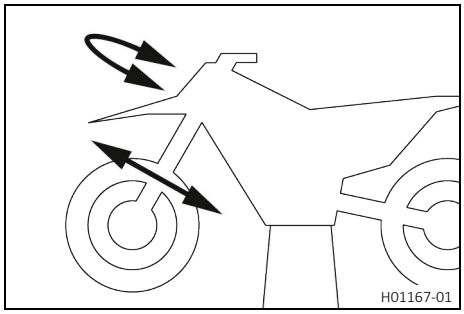

– Move the handlebar to the straight-ahead position. Move the fork legs to and fro in the direction of travel.

Play should not be detectable on the steering head bearing.

» If there is detectable play:
  – Adjust the steering head bearing play. (p. 52)
– Move the handlebar back and forth over the entire steering range.

It must be possible to move the handlebar easily over the entire steering range. There should be no detectable detent positions.

» If detent positions are detected:
  – Adjust the steering head bearing play. (p. 52)
  – Check the steering head bearing and adjust if necessary.

Reworking
– Remove the motorcycle from the lift stand. (p. 44)

11.16 Adjusting the steering head bearing play

Preparatory work
– Raise the motorcycle with a lift stand. (p. 44)
– Remove the handlebar pad.

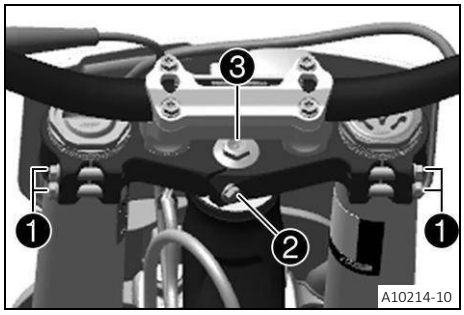

Main work

– Loosen screws ❶.
– Remove screw ❷.
– Loosen and retighten screw ❸.

Screw, top steering head	
M20×1.5	12 Nm (8.9 ft·lb$_f$)

– Using a plastic hammer, tap lightly on the upper triple clamp to avoid stresses.
– Tighten screws ❶.

Screw, top triple clamp	
M8×40	20 Nm (14.8 ft·lb$_f$)

– Mount and tighten screw ❷.

Screw, upper steering stem	
M8×25	20 Nm (14.8 ft·lb$_f$) **Loctite® 243**

Reworking

– Check the steering head bearing play. (p. 52)
– Remove the motorcycle from the lift stand. (p. 44)
– Mount the handlebar pad.

11.17 Lubricating the steering head bearing

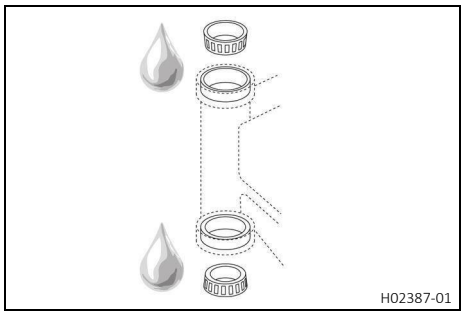

– Remove the lower triple clamp. (p. 49)
– Install the lower triple clamp. (p. 50)

Note
The steering head bearing is cleaned and lubricated in the course of removal and installation of the lower triple clamp.

11.18 Removing the number plate

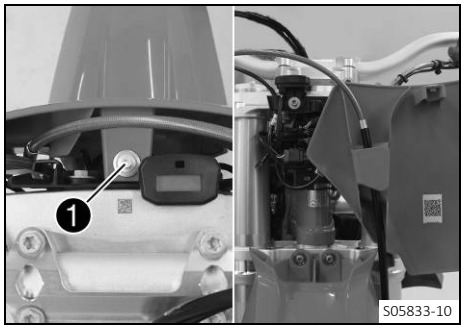

– Remove screw ❶.
– Unhook the number plate from the brake line and remove it.

11.19 Mounting the number plate

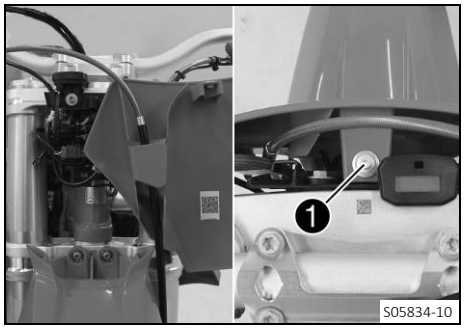

- Position the brake line in holders on the start number plate.
- Position the number plate.
- Mount and tighten screw 1.

Remaining screws on chassis	
EJOT PT® – K60×25	2 Nm (1.5 ft·lb$_f$)

✓ The holding lugs engage in the fender.

11.20 Removing the front top fender

Preparatory work

- Remove the number plate. (p. 53)

Main work

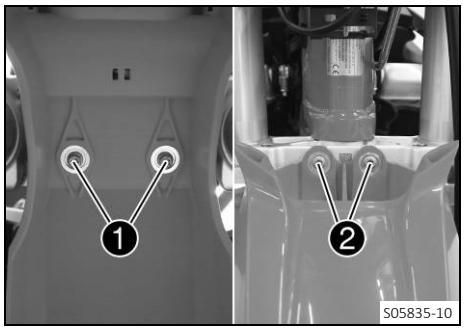

- Remove screws 1 and 2.
- Remove the front fender.

11.21 Installing the front top fender

Main work

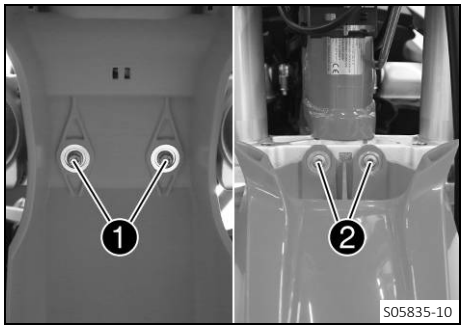

- Position the front fender.
- Mount and tighten screws 1 and 2.

Screw, fender on triple clamp	
M6×16	12 Nm (8.9 ft·lb$_f$)

Reworking

- Mount the number plate. (p. 54)

11.22 Removing the shock absorber

Preparatory work

- Remove the frame protector. (p. 47)
- Remove the right side panel. (p. 46)
- Remove the muffler. (p. 62)
- Raise the motorcycle with a lift stand. (p. 44)

Main work

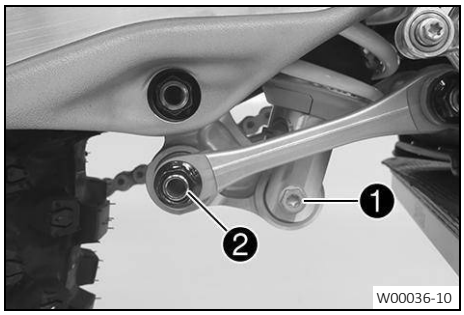

- Remove screw 1.
- Remove screw connection 2.

> **Tip**
> Raise the swingarm slightly to be able to remove the screws more easily.

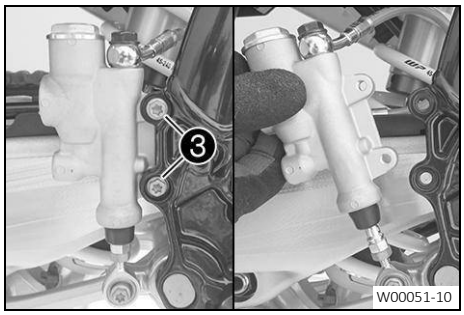

- Remove screws 3.
- Pull brake cylinder off of the push rod.

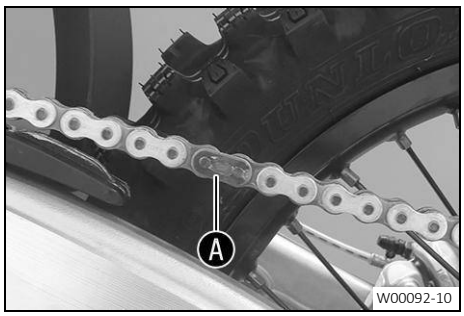

- Remove connecting link A on the chain.
- Take off the chain.

Protect the components against damage by covering them.

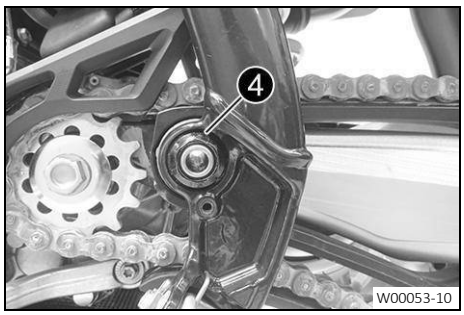

- Remove nut 4 and the swingarm pivot.
- Push the swingarm back and secure it against falling over.

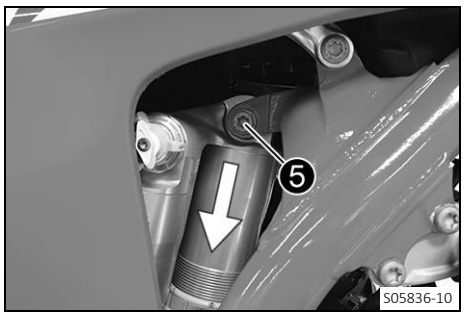

– Hold the shock absorber and remove screw ❺.
– Remove the shock absorber carefully at the bottom.

11.23 Installing the shock absorber

Main work

– Carefully position the shock absorber into the vehicle from the bottom.
– Mount and tighten screw ❶.

Top shock absorber screw	
M10	60 Nm (44.3 ft·lb$_f$) **Loctite® 2701**

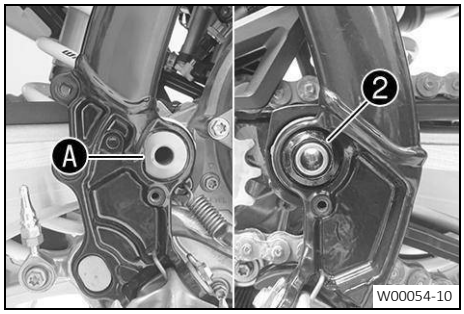

– Position the swingarm and fit the swingarm pivot.

Pay attention to flat area Ⓐ.

– Mount and tighten nut ❷.

Nut, swingarm pivot	
M16×1.5	100 Nm (73.8 ft·lb$_f$)

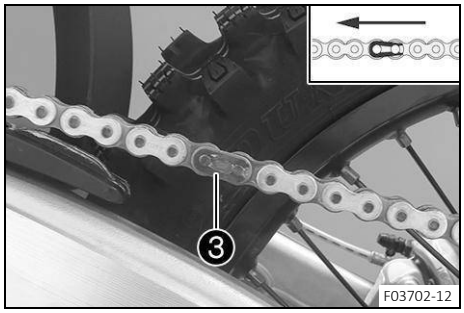

– Mount the chain.
– Connect the chain with connecting link ❸.

The closed side of the master link clip must face in the direction of travel.

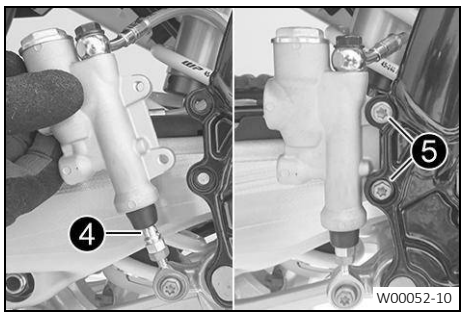

– Position the brake cylinder.

Ensure that the dust boot is properly seated.

✓ Push rod ❹ engages in the brake cylinder.

– Mount and tighten screws ❺.

Remaining screws on chassis	
M6	10 Nm (7.4 ft·lb$_f$)

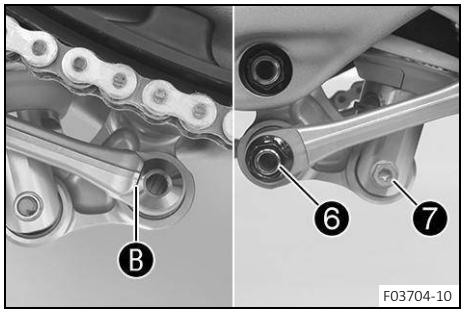

– Position the power valve control lever and linkage lever.

– Mount and tighten screw connection ❻.

Pay attention to flat area Ⓑ.

Nut, pull rod on triangular lever	
M14×1.5	60 Nm (44.3 ft·lb$_f$)

– Mount and tighten screw ❼.

Screw, shock absorber	
M10×52	60 Nm (44.3 ft·lb$_f$) **Loctite® 2701**

Tip
Raise the swingarm slightly to be able to mount the screw more easily.

Reworking

– Install the muffler. (p. 63)
– Install the right side panel. (p. 47)
– Install the frame protector. (p. 47)
– Check the free travel of the brake pedal. (p. 84)
– Remove the motorcycle from the lift stand. (p. 44)

11.24 Removing the seat

Preparatory work

– Remove air filter box cover. (p. 59)

Main work

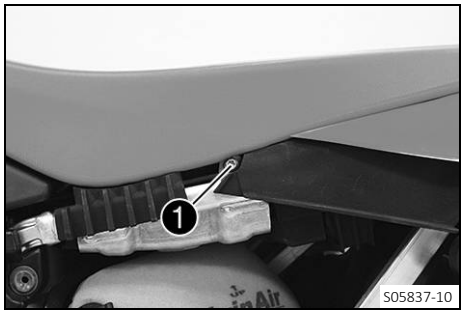

– Remove screw ❶.

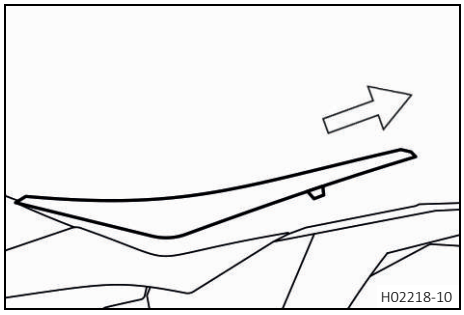

– Push the seat forward and take it off in an upward direction.

11.25 Mounting the seat

Main work

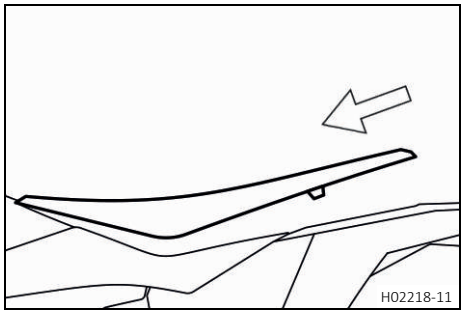

– Place the seat on the fuel tank and slide it backwards into the brackets.
– Make sure the seat is latched in place correctly.

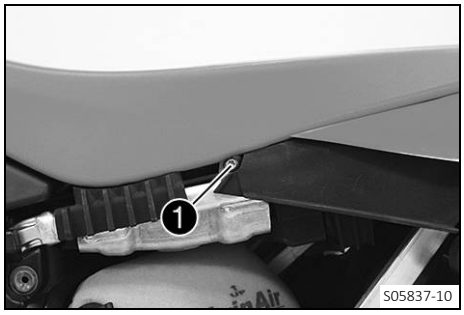

– Mount and tighten screw ❶.

Screw, seat installation	
M6	8 Nm (5.9 ft·lb_f)

Reworking

– Installing air filter box cover (p. 59)

11.26 Removing air filter box cover

Condition: Air filter box cover secured

– Remove screw 1.

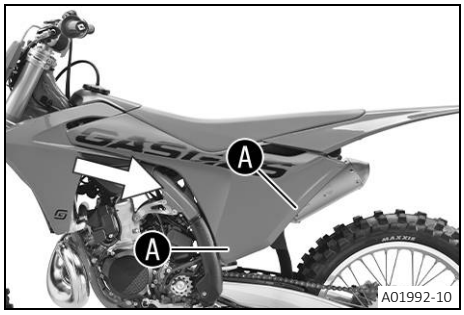

– Pull off the air filter box cover sideways in areas A and remove sideways toward the rear.

Condition: Air filter box cover not secured

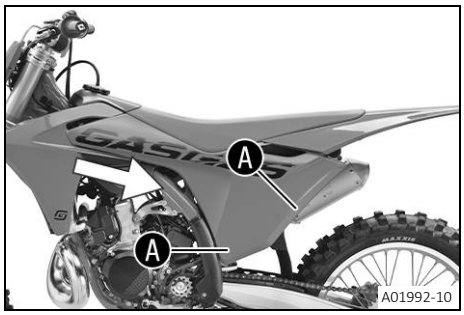

– Pull off the air filter box cover sideways in areas A and remove toward the rear.

11.27 Installing air filter box cover

Condition: Air filter box cover secured

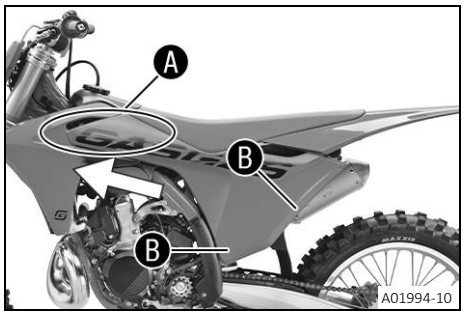

– Slide the air filter box cover forward and hook into area A.
– Engage the air filter box cover in areas B.

Ensure that the air filter box cover is correctly hooked in to areas A and B.

– Mount and tighten screw 1.

Screw, air filter box cover	
EJOT PT® – MK60×20 – Z	3 Nm (2.2 ft·lb$_f$)

Condition: Air filter box cover not secured

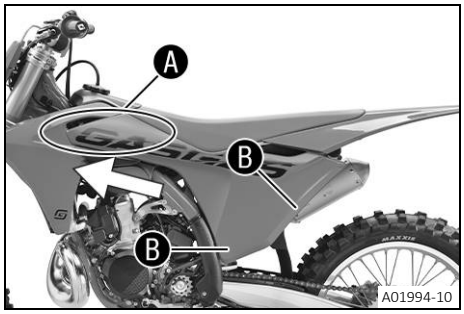

– Slide the air filter box cover forward and hook into area A.
– Engage the air filter box cover in areas B.

11.28 Removing the air filter

NOTE

Engine failure Unfiltered intake air has a negative effect on the service life of the engine.
Dust and dirt can enter the engine if there is no air filter or if the air filter is mounted incorrectly.

– Only operate the vehicle if an air filter is correctly fitted.

NOTE

Environmental hazard Hazardous substances cause environmental damage.

– Dispose of oils, grease, filters, fuel, cleaning agents, brake fluid, etc. correctly and in accordance with the applicable regulations.

Preparatory work

– Remove air filter box cover. (p. 59)

Main work

– Detach tab 1.
– Remove the air filter with the air filter support.

11.29 Installing the air filter

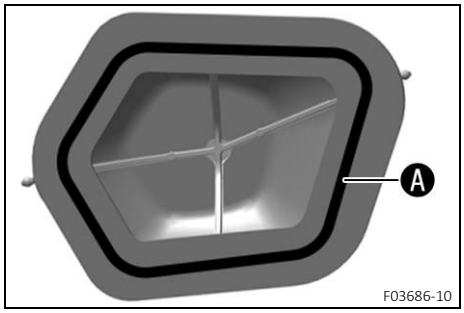

Main work

– Mount the clean air filter on the air filter support.

The marking on the air filter support must face upwards.

– Grease the air filter in area A.

Long-life grease (p. 142)

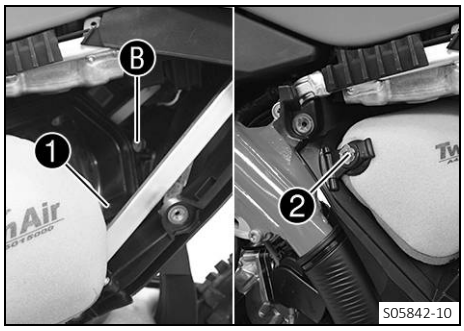

– Insert air filter and position retaining pin 1 in bushing B.

The marking on the air filter must face upwards.

✓ The air filter is correctly positioned.

– Attach tab 2.

✓ Retaining pin 3 is secured by tab 2.

Note
If the air filter is not mounted correctly, dust and dirt may enter the engine and result in damage.

Reworking

– Installing air filter box cover (p. 59)

11.30 Cleaning the air filter and air filter box

NOTE
Environmental hazard Hazardous substances cause environmental damage.

– Dispose of oils, grease, filters, fuel, cleaning agents, brake fluid, etc. correctly and in accordance with the applicable regulations.

Note
Do not clean the air filter with fuel or petroleum as these substances will damage the foam rubber.

Preparatory work

– Remove air filter box cover. (p. 59)

– Remove the air filter. (p. 60)

Main work

– Wash the air filter thoroughly in special cleaning liquid and allow it to dry properly.

Do not clean the air filter with fuel or petroleum as these substances will damage the foam rubber.
Only press the air filter to dry it, do not wring it out.

Air filter cleaning agent (p. 146)

– Oil the dry air filter with a high-grade air filter oil.

Oil for foam air filter (p. 143)

– Clean the air filter box.
– Clean the intake flange and check it for damage and that it is firmly seated.

Reworking

– Install the air filter. (p. 61)
– Installing air filter box cover (p. 59)

11.31 Preparing the air filter box cover for securing

Preparatory work

– Remove air filter box cover. (p. 59)

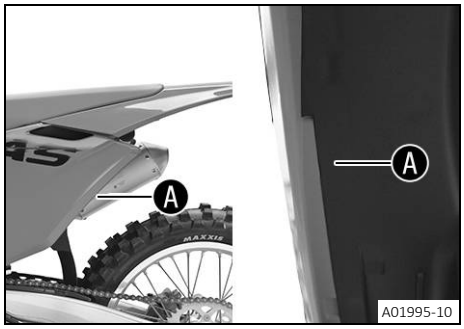

Main work

– Drill a hole at marking A.

Diameter	6 mm (0.24 in)

Reworking

– Installing air filter box cover (p. 59)

11.32 Removing the muffler

WARNING

Danger of burns The exhaust system gets hot when the vehicle is driven.

– Allow the exhaust system to cool down before performing any work on the vehicle.

Preparatory work

– Remove the frame protector. (p. 47)
– Remove the right side panel. (p. 46)

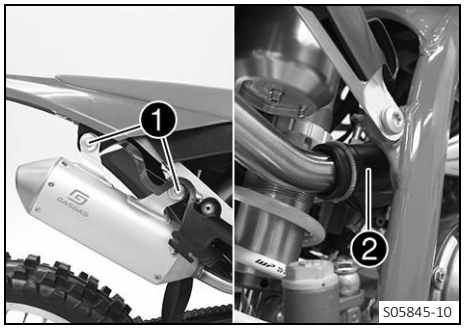

Main work

– Remove screws ❶ with the washers.
– Pull off the muffler from the expansion chamber at sleeve ❷.

11.33 Installing muffler

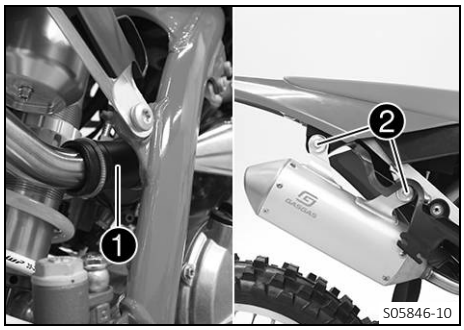

Main work

– Position the muffler in sleeve ❶.
– Mount and tighten screws ❷ with the washers.

Remaining screws on chassis	
M6	10 Nm (7.4 ft·lb$_f$)

Reworking

– Install the right side panel. (p. 47)
– Install the frame protector. (p. 47)

11.34 Changing the damping material on the main silencer

WARNING
Danger of burns The exhaust system gets hot when the vehicle is driven.
– Allow the exhaust system to cool down before performing any work on the vehicle.

Note
Over time, the fibers of the damping wool escape into the air, and the muffler “burns out”.
Not only does this make the noise level higher, but the performance characteristics also change.

Preparatory work

– Remove the frame protector. (p. 47)
– Remove the right side panel. (p. 46)
– Remove the muffler. (p. 62)

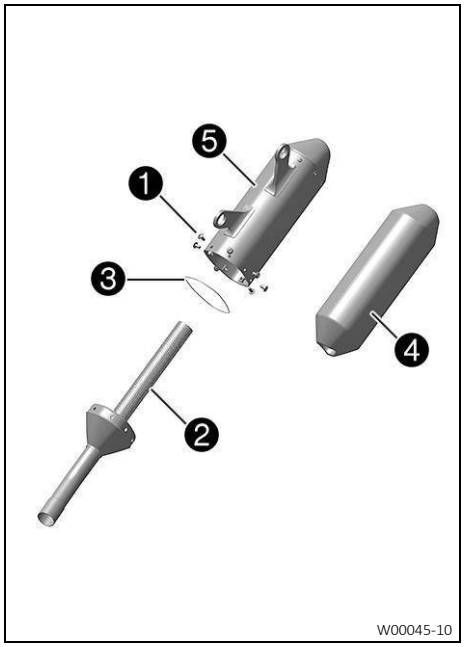

Main work

- Remove screws ❶. Pull out inner tube ❷ with O-ring ❸.
- Pull damping material ❹ off the inner tube.
- Clean the parts that need to be reinstalled and check for damage.
- Mount new damping material ❹ on the inner tube.
- Slide outer tube ❺ over the inner tube with the new damping material and the O-ring.
- Mount and tighten all screws ❶.

Screws on muffler	
M5	7 Nm (5.2 ft•lb_f)

Reworking

- Install the muffler. (p. 63)
- Install the right side panel. (p. 47)
- Install the frame protector. (p. 47)

11.35 Removing the fuel tank

DANGER

Fire hazard Fuel is highly flammable.

The fuel in the fuel tank expands when warm and can escape if overfilled.

- Do not refuel the vehicle in the vicinity of open flames, glowing, or smoldering objects.
- Make sure that nobody smokes in the vicinity of the vehicle during the refueling process.
- Switch off the engine for refueling.
- Make sure that no fuel is spilled; particularly not on hot parts of the vehicle.
- If any fuel is spilled, wipe it up immediately.
- Do not overfill the fuel tank.

WARNING

Danger of poisoning Fuel is harmful to health.

- Do not allow fuel to come into contact with skin, eyes, or clothing.
- Consult a doctor immediately if fuel has been ingested.
- Do not inhale fuel vapors.
- Rinse the affected area immediately with plenty of water in the event of contact with skin.
- Rinse eyes thoroughly with water and consult a doctor immediately if fuel comes into contact with eyes.
- If fuel spills on to your clothing, change the clothing.
- Store fuel properly in a suitable container and keep out of the reach of children.

NOTE

Environmental hazard Improper handling of fuel is dangerous to the environment.

- Do not allow fuel to enter the groundwater, the soil, or the sewage system.

Preparatory work

- Remove the frame protector. (p. 47)
- Remove the right side panel. (p. 46)
- Remove air filter box cover. (p. 59)
- Remove the seat. (p. 57)

Main work

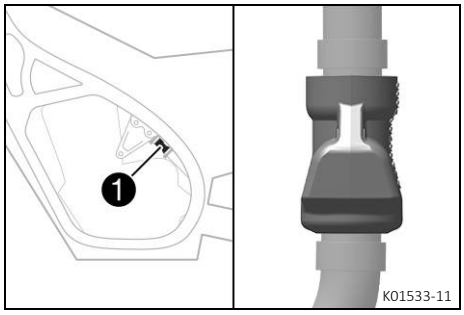

- Remove protection cap ❶ of the fuel line.

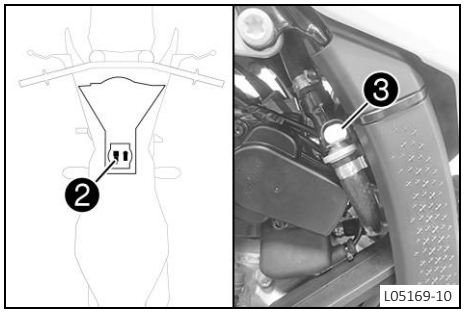

- Unplug socket connector ❷ of the fuel pump.
- Clean quick-lock coupling ❸ thoroughly with compressed air.

Dust must not enter the fuel line.
Dirt in the fuel line clogs the injector!

- Disconnect the quick-lock coupling.

Note
Remaining fuel may flow out of the fuel hose.

- Mount the wash cap set.

Wash cap set (81212016100)

- Pull the fuel tank vent hose off the fuel tank cap.

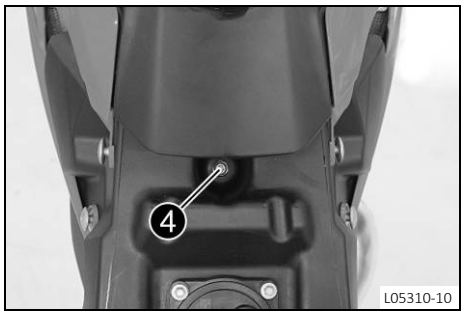

- Remove screw ❹ with the rubber bushing.

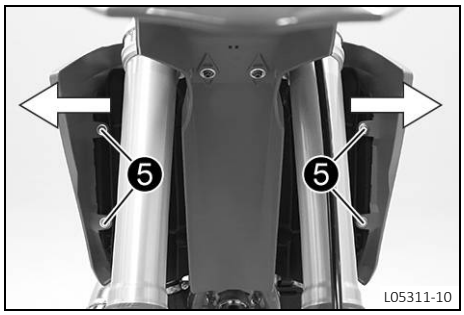

- Remove screws ❺ with the collar bushings.
- Pull both spoilers laterally off the radiator and lift off the fuel tank.

11.36 Installing the fuel tank

DANGER

Fire hazard Fuel is highly flammable.

The fuel in the fuel tank expands when warm and can escape if overfilled.

- Do not refuel the vehicle in the vicinity of open flames, glowing, or smoldering objects.
- Make sure that nobody smokes in the vicinity of the vehicle during the refueling process.
- Switch off the engine for refueling.
- Make sure that no fuel is spilled; particularly not on hot parts of the vehicle.
- If any fuel is spilled, wipe it up immediately.
- Do not overfill the fuel tank.

WARNING

Danger of poisoning Fuel is harmful to health.

- Do not allow fuel to come into contact with skin, eyes, or clothing.
- Consult a doctor immediately if fuel has been ingested.
- Do not inhale fuel vapors.
- Rinse the affected area immediately with plenty of water in the event of contact with skin.
- Rinse eyes thoroughly with water and consult a doctor immediately if fuel comes into contact with eyes.
- If fuel spills on to your clothing, change the clothing.
- Store fuel properly in a suitable container and keep out of the reach of children.

NOTE

Environmental hazard Improper handling of fuel is dangerous to the environment.

- Do not allow fuel to enter the groundwater, the soil, or the sewage system.

Main work

- Check the throttle cable routing. (p. 73)

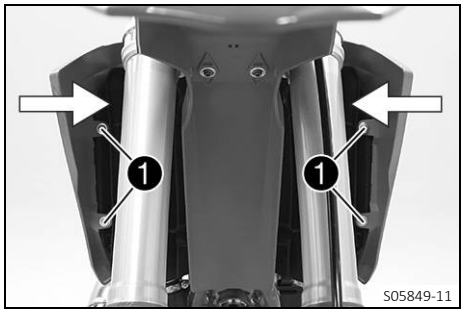

- Position the fuel tank and fit both spoilers to the side of the radiator.
- Make sure that no wires or cables are trapped or damaged.
- Attach the fuel tank vent hose to the fuel tank cap.
- Mount and tighten screws ❶ with the collar bushings.

Screw, fuel tank spoiler on radiator	
M6×12	6 Nm (4.4 ft·lb$_f$)

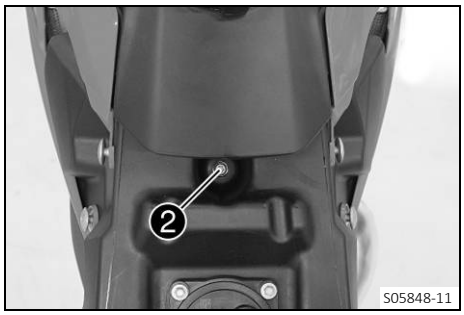

- Mount and tighten screw ❷ with the rubber bushing.

Remaining screws on chassis	
M6	10 Nm (7.4 ft·lb$_f$)

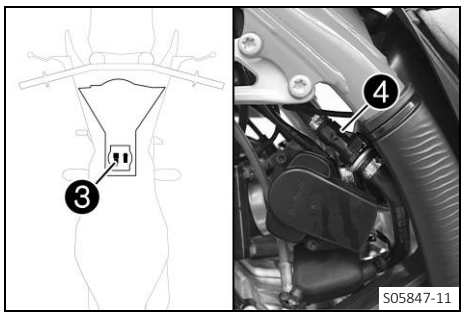

– Plug in fuel pump socket connector ❸.
– Remove the wash cap set and thoroughly clean the quick-lock coupling using compressed air.

Dust must not enter the fuel line.
Dirt in the fuel line clogs the injector!

– Spray silicone spray onto a lint-free cleaning cloth and lightly lubricate the O-ring of the quick-lock coupling.

Silicone spray (p. 143)

– Join quick-lock coupling ❹ of the fuel line.

Route the wire and fuel line at a safe distance from the exhaust system.

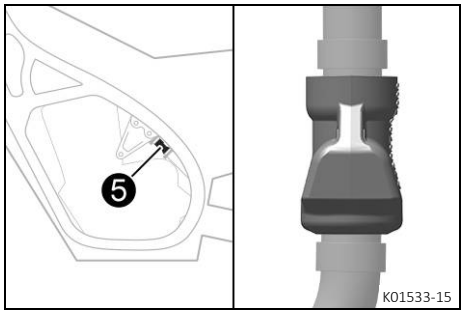

– Mount protection cap ❺ of the fuel line.

Reworking

– Mount the seat. (p. 58)
– Installing air filter box cover (p. 59)
– Install the right side panel. (p. 47)
– Install the frame protector. (p. 47)

11.37 Checking the chain for dirt

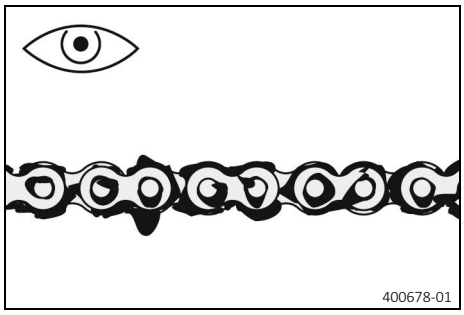

– Check the chain for coarse dirt accumulation.
  » If the chain is very dirty:
    – Clean the chain. (p. 68)

11.38 Cleaning the chain

WARNING
Danger of accidents Oil, grease or wax on the brake discs reduces the brake action.
– Always keep the brake discs free of oil, fat and wax.
– Clean the brake discs with brake cleaner when necessary.

WARNING
Danger of accidents Lubricants on the tires reduces the road grip.
– Remove lubricants from the tires using a suitable cleaning agent.

NOTE
Environmental hazard Hazardous substances cause environmental damage.
– Dispose of oils, grease, filters, fuel, cleaning agents, brake fluid, etc. correctly and in accordance with the applicable regulations.

Note
The service life of the chain depends largely on its maintenance.

Preparatory work
– Raise the motorcycle with a lift stand. (p. 44)

Main work
– Rinse off the loose dirt with a gentle jet of water.
– Remove old grease residues with a chain cleaner.

Chain cleaner (p. 146)

– After drying, apply chain spray.

Off-road chain spray (p. 142)

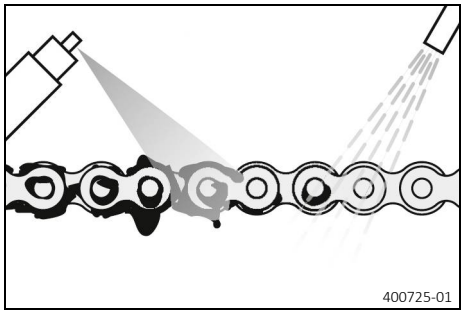

Reworking
– Remove the motorcycle from the lift stand. (p. 44)

11.39 Checking the chain tension

WARNING
Danger of accidents Incorrect chain tension can damage components and result in an accident.
If the chain is tension is too high, the chain, front sprocket, rear sprocket, transmission, and rear wheel bearings wear more quickly. Some components may break if overloaded.
If the chain is too loose, the chain may fall off the front sprocket or the rear sprocket. This can damage the rear wheel or the engine.
– Check the chain tension regularly.
– Set the chain tension in accordance with the specification.

Preparatory work

– Raise the motorcycle with a lift stand. (p. 44)

Main work

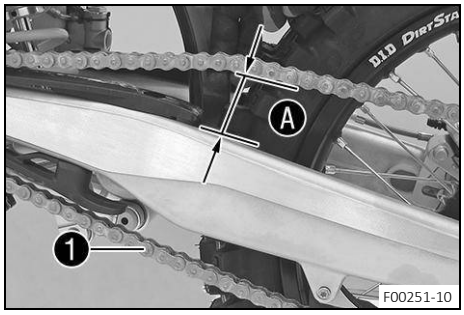

– Pull the chain at the end of the chain slider upward to measure chain tension A.

Chain tension	55 mm … 58 mm (2.17 in … 2.28 in)
Lower chain section 1 must be taut.	
Chain wear is not always even, so repeat this measurement at different positions on the chain.	

» If the chain tension does not meet the specification:

– Adjust the chain tension. (p. 69)

Reworking

– Remove the motorcycle from the lift stand. (p. 44)

11.40 Adjusting the chain tension

WARNING

Danger of accidents Incorrect chain tension can damage components and result in an accident.

If the chain is tension is too high, the chain, front sprocket, rear sprocket, transmission, and rear wheel bearings wear more quickly. Some components may break if overloaded.

If the chain is too loose, the chain may fall off the front sprocket or the rear sprocket. This can damage the rear wheel or the engine.

– Check the chain tension regularly.
– Set the chain tension in accordance with the specification.

Preparatory work

– Raise the motorcycle with a lift stand. (p. 44)
– Check the chain tension. (p. 68)

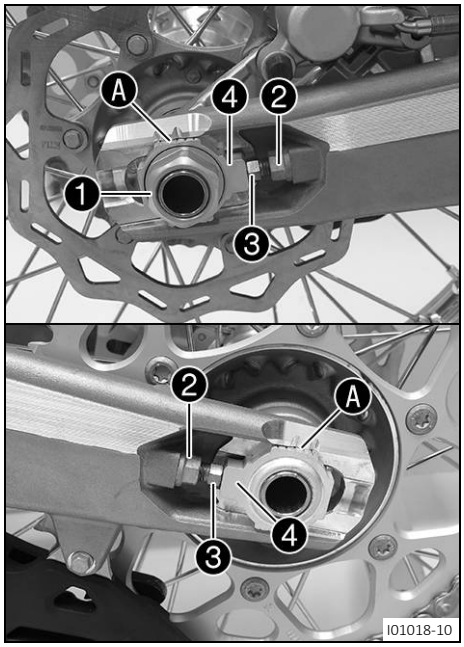

Main work

– Loosen nut ❶.
– Loosen nuts ❷.
– Adjust the chain tension by turning adjusting screws ❸ left and right.

Chain tension	55 mm … 58 mm (2.17 in … 2.28 in)
Turn adjusting screws ❸ on the left and right so that the markings on the left and right chain adjusters are in the same position relative to reference marks Ⓐ. The rear wheel is then correctly aligned.	

– Tighten nuts ❷.
– Make sure that chain adjusters ❹ are fitted correctly on adjusting screws ❸.
– Tighten nut ❶.

Nut, wheel spindle, rear	
M22×1.5	80 Nm (59.0 ft·lb_f)

Note

Chain adjusters ❹ can be turned by 180°.

Reworking

– Remove the motorcycle from the lift stand. (p. 44)

11.41 Checking the chain, rear sprocket, front sprocket, and chain guide

Preparatory work

– Raise the motorcycle with a lift stand. (p. 44)

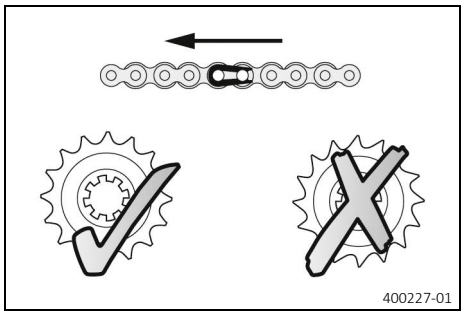

Main work

– Shift the transmission into the neutral position.
– Check the chain, rear sprocket, and front sprocket for wear.
  » If the chain, rear sprocket, or front sprocket is worn:
    – Change the drivetrain kit.

Always replace the front sprocket, rear sprocket, and chain together.

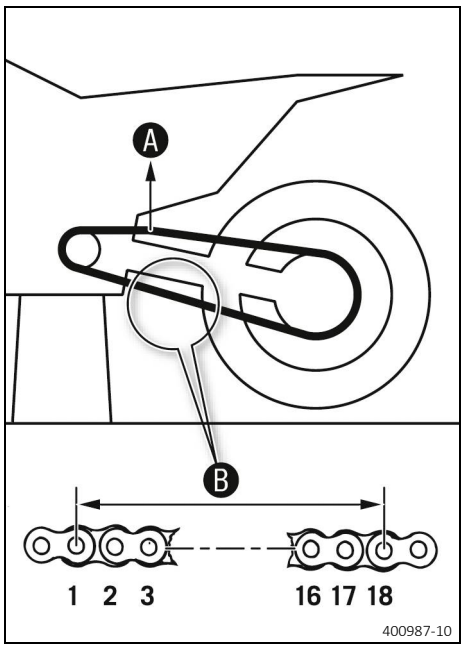

– Pull on the top section of the chain with the specified weight A.

Weight, chain wear measurement	10 kg … 15 kg (22.0 lb … 33.1 lb)

– Measure distance B of chain rollers in the lower chain section.

Maximum distance B of chain rollers at the longest chain section	272 mm (10.71 in)
Chain wear is not always even, so repeat this measurement at different positions on the chain.	

» If distance B is greater than the specified measurement:

– Change the drivetrain kit.

When installing a new chain, also replace the rear sprocket and front sprocket.

Note
New chains wear out faster on old, worn front or rear sprockets.

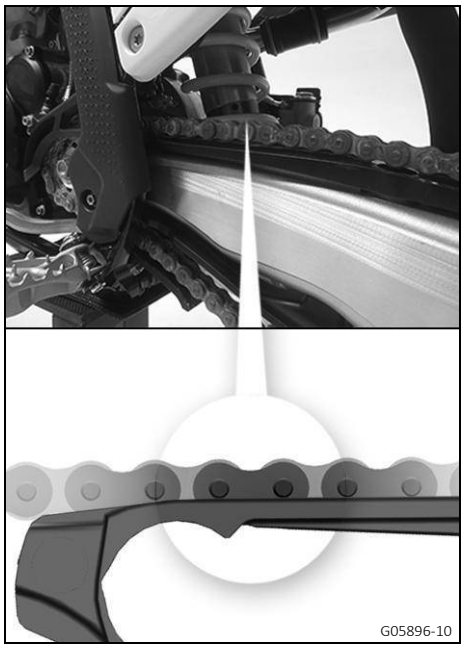

– Check the chain slider at the top for wear.

» If the lower edge of the chain pins is in line with, or below, the chain slider:

– Change the chain slider.

– Check that the chain slider is firmly seated.

» If the chain slider is loose:

– Tighten the screws of the chain slider.

Screw, chain slider guard	
M6×16	6 Nm (4.4 ft·lb_f) **Loctite® 243**

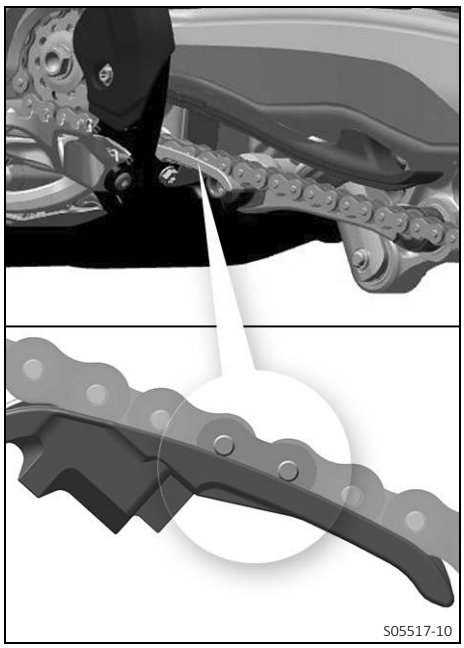

– Check the chain slider for wear.
  » If the lower edge of the chain pins is in line with or below the chain slider:
    – Change the chain slider.
– Check that the chain slider is firmly seated.
  » If the chain slider is loose:
    – Tighten the screws of the chain slider.

Screw, chain slider	
M8×20	15 Nm (11.1 ft·lb$_f$)

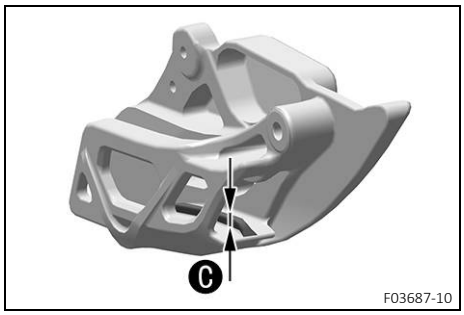

– Check the chain guide with a slide gage for dimension C.

Minimum thickness C of the chain guide	6 mm (0.24 in)

  » If the specifications have not been met:
    – Change the chain guide.

– Check that the chain guide is firmly seated.
  » If the chain guide is loose:
    – Tighten the screws on the chain guide.

Remaining screws on chassis	
M6	10 Nm (7.4 ft·lb$_f$)
Remaining nuts on chassis	
M6	10 Nm (7.4 ft·lb$_f$)

Reworking

– Remove the motorcycle from the lift stand. (p. 44)

11.42 Checking the frame

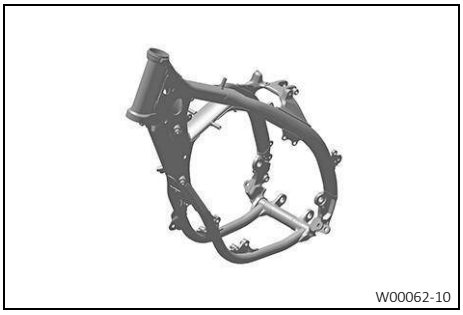
W00062-10

– Check the frame for damage, cracks, and deformation.
  » If the frame shows signs of damage, cracks, or deformation:
    – Change the frame.

Repairs on the frame are not permitted.

11.43 Checking the swingarm

W00063-10

– Check the swingarm for damage, cracks, and deformation.
  » If the swingarm shows signs of damage, cracks, or deformation:
    – Change the swingarm.

Repairs on the swingarm are not permitted.

11.44 Checking the throttle cable routing

WARNING
Danger of accidents The throttle cable can become kinked, jammed, or blocked if it has been routed incorrectly. If the throttle cable is kinked, jammed or blocked, the speed can no longer be controlled.
– Make sure that the throttle cable routing and the play in the throttle cable complies with the specification.

Preparatory work
– Remove the frame protector. (p. 47)
– Remove the right side panel. (p. 46)
– Remove air filter box cover. (p. 59)
– Remove the seat. (p. 57)
– Remove the fuel tank. (p. 64)

Main work

– Check the throttle cable routing.

Both throttle cables must be routed, side by side, on the back of the handlebars, above the fuel tank bearing on the right of the frame to the throttle body. The throttle cable must be secured on the fuel tank bearing with a rubber band.

» If the throttle cable routing is not as specified:
  – Correct the throttle cable routing.

Reworking

– Install the fuel tank. (p. 66)
– Mount the seat. (p. 58)
– Installing air filter box cover (p. 59)
– Install the right side panel. (p. 47)
– Install the frame protector. (p. 47)

11.45 Checking the hand grip

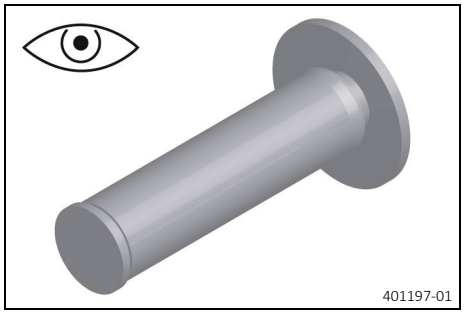

– Check the hand grips on the handlebar for damage, wear, and that they are firmly seated.

Note

The hand grips are vulcanized onto a sleeve on the left and onto the grip tube of the throttle grip on the right. The left sleeve is clamped onto the handlebar.

The hand grip can only be replaced with the sleeve or the gas pipe.

» If a hand grip is damaged or worn:
  – Replace the hand grip.

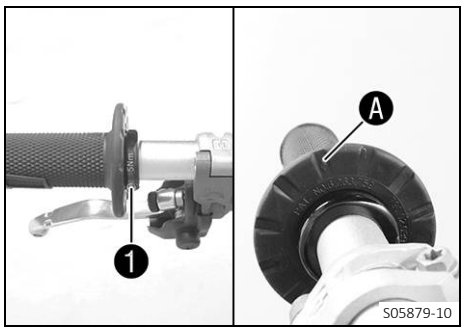

– Check that screw 1 is firmly seated.

Screw, fixed grip	
M4×12	5 Nm (3.7 ft·lb$_f$) **Loctite® 243**

Diamond A must be located at the top.

11.46 Adjusting the basic position of the clutch lever

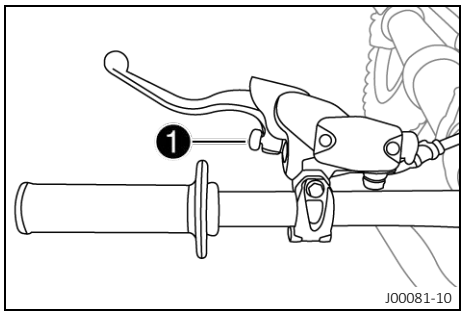

– Adjust the basic position of the clutch lever to your hand size by turning adjusting screw 1.

Only turn the adjusting screw by hand, and do not use force.
Do not make any adjustments while riding.

Note

When the adjusting screw is turned counterclockwise, the clutch lever moves closer to the handlebar.

When the adjusting screw is turned clockwise, the clutch lever moves away from the handlebar.

The range of adjustment is limited.

11.47 Checking/correcting the fluid level of hydraulic clutch

WARNING

Health hazard Brake fluid is a harmful substance.

– Keep brake fluid out of the reach of children.
– Wear suitable protective clothing and safety glasses.
– Do not allow brake fluid to come into contact with the skin, the eyes, or clothing.
– Consult a doctor immediately if brake fluid has been ingested.
– Rinse the affected area with plenty of water in the event of contact with the skin.
– Rinse eyes thoroughly with water immediately and consult a doctor if brake fluid comes into contact with the eyes.
– If brake fluid spills on to your clothing, change the clothing.

Note

The fluid level rises with increasing wear of the friction plates.

Avoid contact between brake fluid and painted parts. Brake fluid corrodes paint.

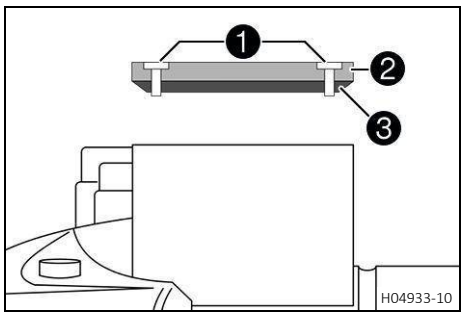

- Move the hydraulic clutch fluid reservoir mounted on the handlebar into a horizontal position.
- Remove screws ❶.
- Take off cover ❷ with diaphragm ❸.
- Check the fluid level.

Fluid level below reservoir rim	4 mm (0.16 in)

» If the fluid level does not meet the specifications:
  - Correct the fluid level of the hydraulic clutch.

Brake fluid DOT 5.1 (p. 143)

- Position the cover with diaphragm.
- Mount and tighten the screws.

Immediately clean up any brake fluid that has overflowed or spilled with water.

11.48 Changing the hydraulic clutch fluid

WARNING

Health hazard Brake fluid is a harmful substance.

- Keep brake fluid out of the reach of children.
- Wear suitable protective clothing and safety glasses.
- Do not allow brake fluid to come into contact with the skin, the eyes, or clothing.
- Consult a doctor immediately if brake fluid has been ingested.
- Rinse the affected area with plenty of water in the event of contact with the skin.
- Rinse eyes thoroughly with water immediately and consult a doctor if brake fluid comes into contact with the eyes.
- If brake fluid spills on to your clothing, change the clothing.

NOTE

Environmental hazard Hazardous substances cause environmental damage.

- Dispose of oils, grease, filters, fuel, cleaning agents, brake fluid, etc. correctly and in accordance with the applicable regulations.

Note

Avoid contact between brake fluid and painted parts. Brake fluid corrodes paint.

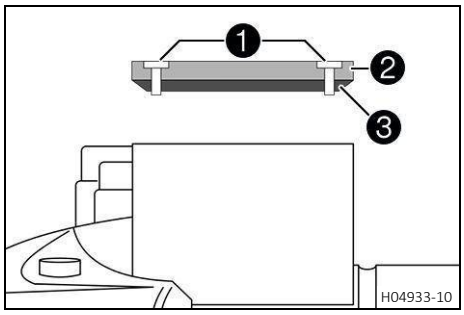

- Move the hydraulic clutch fluid reservoir mounted on the handlebar into a horizontal position.
- Remove screws ❶.
- Take off cover ❷ with diaphragm ❸.

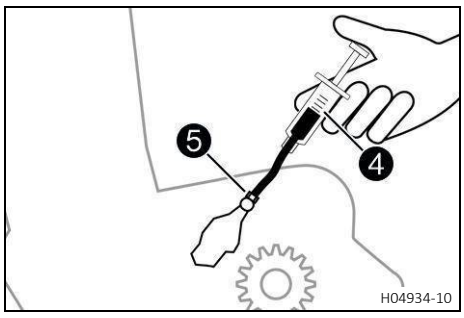

– Fill bleeding syringe ❹.

Syringe (50329050000)
Brake fluid DOT 5.1 (p. 143)

– Remove the protection cap.
– On the clutch slave cylinder, release bleed screw ❺ and mount bleeding syringe ❹.

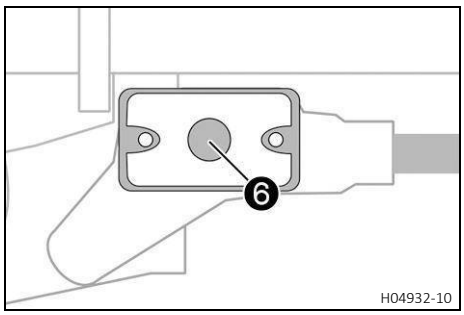

– Inject the liquid into the system until it escapes from bore ❻ of the master cylinder without bubbles.
– Occasionally extract the fluid from the master cylinder reservoir to prevent overflowing.
– Remove the bleeding syringe.
– Tighten bleed screw ❺.
– Mount the protection cap.
– Correct the fluid level of the hydraulic clutch.

Fluid level below reservoir rim	4 mm (0.16 in)

– Position the cover with diaphragm.
– Mount and tighten the screws.

Immediately clean up any brake fluid that has overflowed or spilled with water.

12.1 Checking the free travel on the hand brake lever

WARNING
Danger of accidents The brake system fails in the event of overheating.
If there is no free travel on the brake lever, pressure builds up in the brake system.
– Set the free travel on the brake lever as specified.

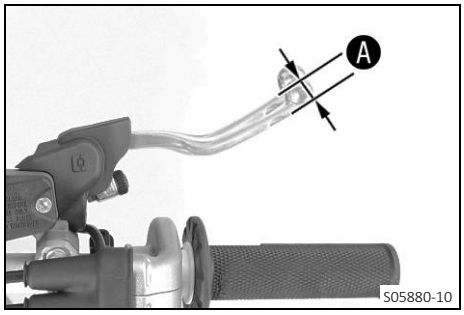

– Push the hand brake lever forward and check free travel A.

Free travel of hand brake lever	≥ 3 mm (≥ 0.12 in)

» If the free travel does not meet the specifications:
  – Check brake system for damage.

12.2 Adjusting the basic position of the hand brake lever

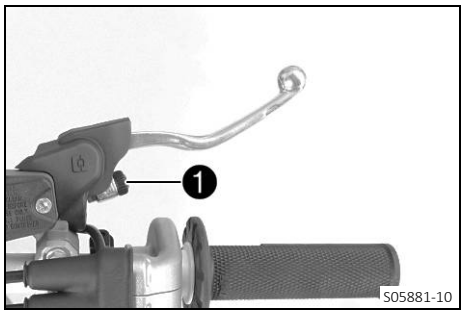

– Adjust the basic position of the hand brake lever to your hand size by turning adjusting screw 1.

Only turn the adjusting screw by hand, and do not use force.
Do not make any adjustments while riding.

Note
Turn the adjusting screw clockwise to increase the distance between the hand brake lever and the handlebar.
Turn the adjusting screw counterclockwise to decrease the distance between the hand brake lever and the handlebar.
The range of adjustment is limited.

12.3 Checking the brake discs

WARNING
Danger of accidents Worn-out brake discs reduce the braking action.
– Make sure that worn-out brake discs are replaced immediately.

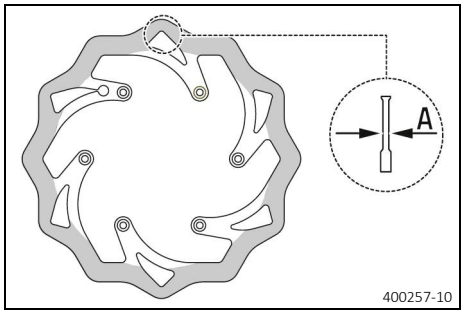

– Check the brake disc thickness of the front and rear brake disc at several places on the disc to see if they conform to measurement A.

Brake disc wear limit	
front	2.5 mm (0.098 in)
rear	3.5 mm (0.138 in)

Note
Wear reduces the thickness of the brake discs at the contact surface of the brake pads.

» If the brake disc thickness is less than the specification:
  – Change the brake discs of the front brake.
  – Change the brake discs on the rear brake.

– Check the front and rear brake discs for damage, cracks, and deformation.
  » If the brake disc shows signs of damage, cracks, or deformation:
    – Change the brake discs of the front brake.
    – Change the brake discs on the rear brake.

12.4 Checking the brake fluid level for the front brake

WARNING
Danger of accidents Brake fluid which is too old or of the wrong type impairs the function of the brake system.
– Make sure that brake fluid for the front and rear brake is changed in accordance with the service schedule.
– Make sure that only clean, approved brake fluid from a tightly sealed container is used.

WARNING
Danger of accidents An insufficient brake fluid level will cause the brake system to fail.
If the brake fluid level drops below the specified marking or the specified value, the brake system has a leak or the brake pads are worn down.
– Have the brake system checked and make sure that the problem has been eliminated before the vehicle is used again.

Preparatory work
– Check that the brake pads of the front brake are secured. (p. 81)

Main work
– Move the brake reservoir mounted on the handlebar to a horizontal position.
– Check the brake fluid level in sight glass 1.
  » If the brake fluid level has fallen below marking A:
    – Add brake fluid for the front brake. (p. 80)

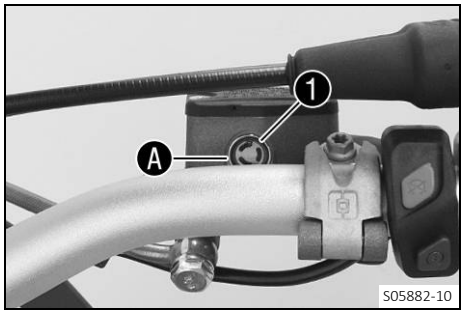

12.5 Adding brake fluid for the front brake

WARNING
Danger of accidents Brake fluid which is too old or of the wrong type impairs the function of the brake system.
– Make sure that brake fluid for the front and rear brake is changed in accordance with the service schedule.
– Make sure that only clean, approved brake fluid from a tightly sealed container is used.

WARNING
Danger of accidents An insufficient brake fluid level will cause the brake system to fail.
If the brake fluid level drops below the specified marking or the specified value, the brake system has a leak or the brake pads are worn down.
– Have the brake system checked and make sure that the problem has been eliminated before the vehicle is used again.

WARNING
Health hazard Brake fluid is a harmful substance.
– Keep brake fluid out of the reach of children.
– Wear suitable protective clothing and safety glasses.
– Do not allow brake fluid to come into contact with the skin, the eyes, or clothing.
– Consult a doctor immediately if brake fluid has been ingested.
– Rinse the affected area with plenty of water in the event of contact with the skin.
– Rinse eyes thoroughly with water immediately and consult a doctor if brake fluid comes into contact with the eyes.
– If brake fluid spills on to your clothing, change the clothing.

NOTE
Environmental hazard Hazardous substances cause environmental damage.
– Dispose of oils, grease, filters, fuel, cleaning agents, brake fluid, etc. correctly and in accordance with the applicable regulations.

Note
Avoid contact between brake fluid and painted parts. Brake fluid corrodes paint.

Preparatory work
– Check that the brake pads of the front brake are secured.
(p. 81)

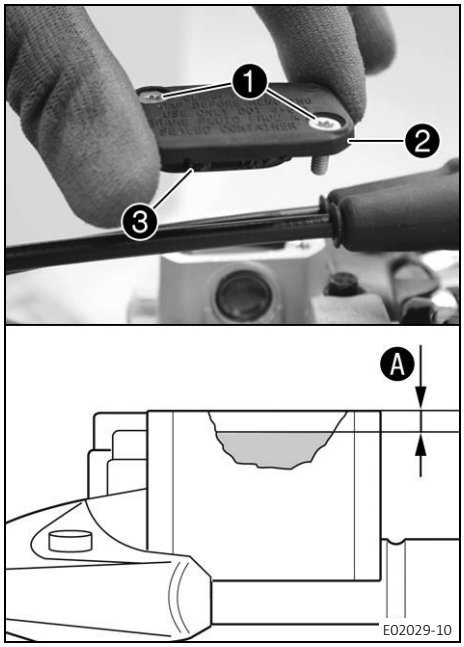

Main work

– Move the brake reservoir mounted on the handlebar to a horizontal position.
– Remove screws ❶.
– Take off cover ❷ with diaphragm ❸.
– Add brake fluid up to level Ⓐ.

Level Ⓐ (brake fluid level below reservoir rim)	5 mm (0.20 in)

Brake fluid DOT 5.1 (p. 143)

– Position cover ❷ with diaphragm ❸.
– Mount and tighten screws ❶.

Immediately clean up any brake fluid that has overflowed or spilled with water.

12.6 Checking that the brake pads of the front brake are secured

WARNING
Danger of accidents Worn brake pads reduce the brake action.
– Make sure that worn brake pads are replaced immediately.

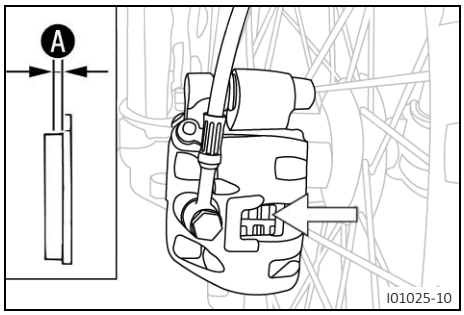

– Check all brake pads on both brake calipers for their lining thickness Ⓐ.

Minimum pad thickness Ⓐ	≥ 1 mm (≥ 0.04 in)

» If it is less than the minimum thickness:
  – Change the front brake pads. (p. 81)
– Check the brake pads for damage and cracking.
» If there is damage or cracking:
  – Change the front brake pads. (p. 81)
– Check that the brake pads are secured.
» If the brake pads are not secured correctly:
  – Secure brake pads, replace with new parts if necessary.

12.7 Changing the brake pads of the front brake

WARNING
Danger of accidents Brake pads which have not been approved alter the braking action.
– Only use brake pads approved and recommended by the vehicle manufacturer.

WARNING
Danger of accidents Incorrect servicing will cause the brake system to fail.
– Ensure that service work and repairs are performed professionally.

WARNING
Danger of accidents Brake fluid which is too old or of the wrong type impairs the function of the brake system.
– Make sure that brake fluid for the front and rear brake is changed in accordance with the service schedule.
– Make sure that only clean, approved brake fluid from a tightly sealed container is used.

WARNING
Danger of accidents Oil, grease or wax on the brake discs reduces the brake action.
– Always keep the brake discs free of oil, fat and wax.
– Clean the brake discs with brake cleaner when necessary.

WARNING
Health hazard Brake fluid is a harmful substance.
– Keep brake fluid out of the reach of children.
– Wear suitable protective clothing and safety glasses.
– Do not allow brake fluid to come into contact with the skin, the eyes, or clothing.
– Consult a doctor immediately if brake fluid has been ingested.
– Rinse the affected area with plenty of water in the event of contact with the skin.
– Rinse eyes thoroughly with water immediately and consult a doctor if brake fluid comes into contact with the eyes.
– If brake fluid spills on to your clothing, change the clothing.

NOTE
Environmental hazard Hazardous substances cause environmental damage.
– Dispose of oils, grease, filters, fuel, cleaning agents, brake fluid, etc. correctly and in accordance with the applicable regulations.

Note
Avoid contact between brake fluid and painted parts. Brake fluid corrodes paint.

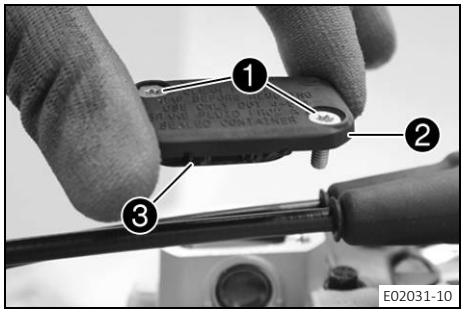

– Move the brake reservoir mounted on the handlebar to a horizontal position.
– Remove screws ❶.
– Take off cover ❷ with diaphragm ❸.
– Manually press the brake caliper toward the brake disc to push back the brake pistons. Ensure that brake fluid does not flow out of the brake fluid reservoir, extract some if necessary.

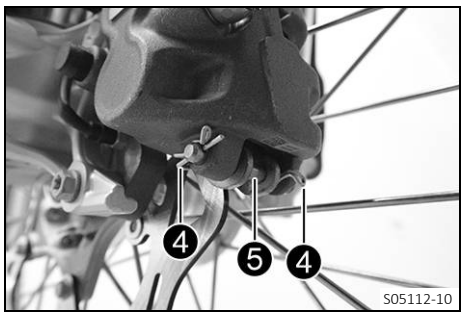

– Remove cotter pin ❹, pull out stud ❺, and remove the brake pads.
– Clean brake caliper and brake caliper support.

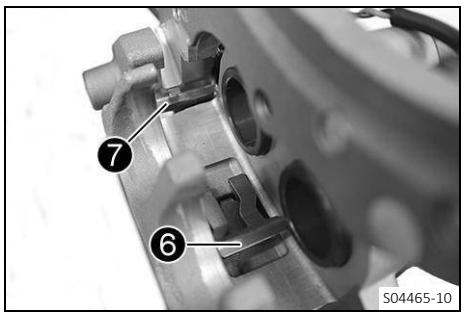

– Check that spring steel clip ❻ in the brake caliper and brake pad guide plate ❼ in the brake caliper support are properly seated.

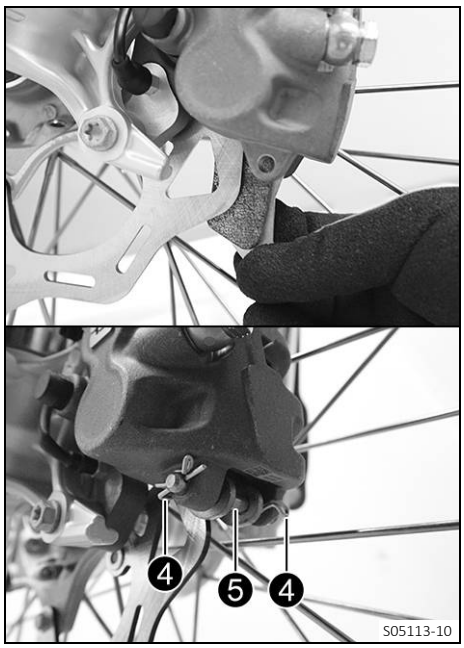

– Insert the new brake linings.

Always replace brake pads in sets.

– Insert pins ❺ and mount cotter pins ❹.

Mount the outer cotter pins from the front to the rear.
Fit the outer cotter pin from the rear to the front.

– Operate the hand brake lever repeatedly until the brake pads are in contact with the brake disc and a pressure point is reached.

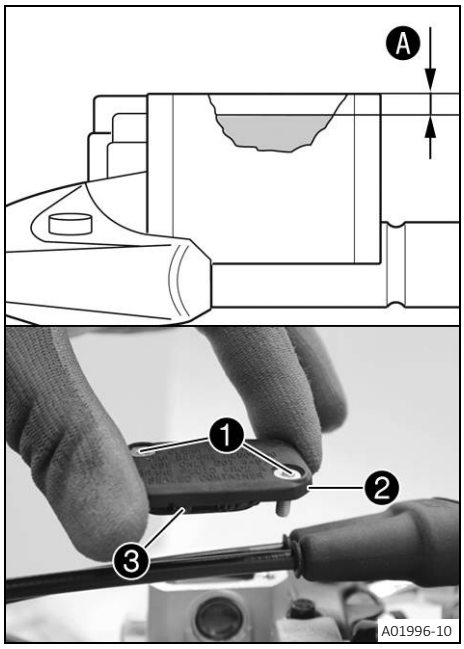

– Add brake fluid to level Ⓐ.

Level Ⓐ (brake fluid level below reservoir rim)	5 mm (0.20 in)

Brake fluid DOT 5.1 (p. 143)

– Position cover ❷ with diaphragm ❸.
– Mount and tighten screws ❶.

Immediately clean up any brake fluid that has overflowed or spilled with water.

12.8 Checking the free travel of the brake pedal

WARNING
Danger of accidents The brake system fails in the event of overheating.
If there is no free travel on the brake lever, pressure builds up in the brake system.
– Set the free travel on the brake lever as specified.

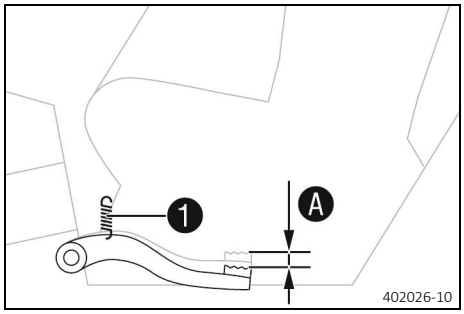

– Detach spring ❶.
– Move the brake pedal back and forth between the end stop and the brake pedal cylinder piston actuation and check free travel Ⓐ.

Free travel of brake pedal	3 mm … 5 mm (0.12 in … 0.20 in)

» If the free travel does not meet the specifications:
  – Adjust the basic position of the brake pedal. (p. 84)
– Attach spring ❶.

12.9 Adjusting the basic position of the brake pedal

WARNING
Danger of accidents The brake system fails in the event of overheating.
If there is no free travel on the brake lever, pressure builds up in the brake system.
– Set the free travel on the brake lever as specified.

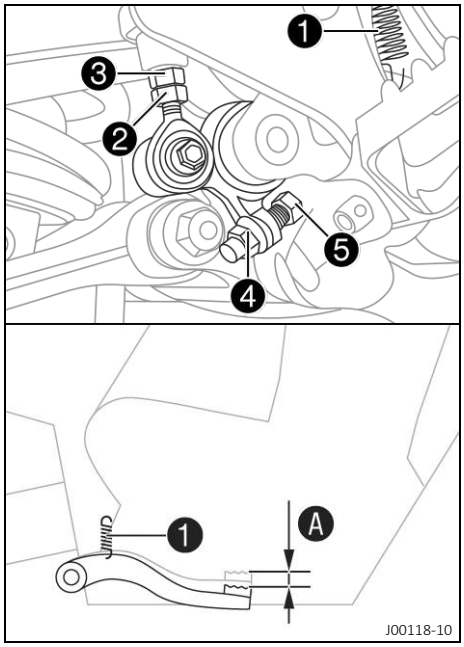

– Detach spring ❶.
– Loosen nut ❷ and unscrew it with push rod ❸ until you have maximum free travel.
– To adjust the basic position of the brake pedal to individual requirements, loosen nut ❹ and turn screw ❺ accordingly.

Note
The range of adjustment is limited.

– Turn push rod ❸ accordingly until you have free travel Ⓐ. If necessary, adjust the basic position of the brake pedal.

Free travel of brake pedal	3 mm … 5 mm (0.12 in … 0.20 in)

– Hold push rod ❸ and tighten nut ❷.

Remaining nuts on chassis	
M6	10 Nm (7.4 ft·lb_f)

– Hold screw ❺ and tighten nut ❹.

Brake pedal stop nut	
M8	20 Nm (14.8 ft·lb_f)

– Attach spring ❶.

12.10 Checking the brake fluid level for the rear brake

WARNING
Danger of accidents Brake fluid which is too old or of the wrong type impairs the function of the brake system.
– Make sure that brake fluid for the front and rear brake is changed in accordance with the service schedule.
– Make sure that only clean, approved brake fluid from a tightly sealed container is used.

WARNING
Danger of accidents An insufficient brake fluid level will cause the brake system to fail.
If the brake fluid level drops below the specified marking or the specified value, the brake system has a leak or the brake pads are worn down.
– Have the brake system checked and make sure that the problem has been eliminated before the vehicle is used again.

Preparatory work
– Check that the brake pads of the rear brake are secured. (p. 86)

Main work
– Stand the vehicle upright.
– Check the brake fluid level in sight glass 1.
  » If the brake fluid level has fallen below marking A:
    – Add brake fluid for the rear brake. (p. 85)

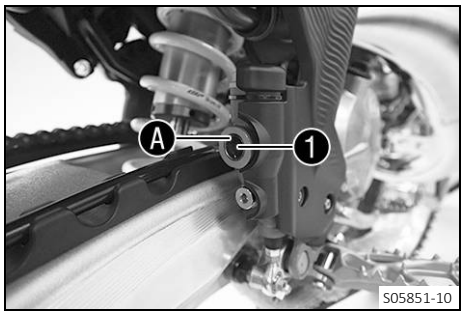

12.11 Adding brake fluid for the rear brake

WARNING
Danger of accidents Brake fluid which is too old or of the wrong type impairs the function of the brake system.
– Make sure that brake fluid for the front and rear brake is changed in accordance with the service schedule.
– Make sure that only clean, approved brake fluid from a tightly sealed container is used.

WARNING
Danger of accidents An insufficient brake fluid level will cause the brake system to fail.
If the brake fluid level drops below the specified marking or the specified value, the brake system has a leak or the brake pads are worn down.
– Have the brake system checked and make sure that the problem has been eliminated before the vehicle is used again.

WARNING
Health hazard Brake fluid is a harmful substance.
– Keep brake fluid out of the reach of children.
– Wear suitable protective clothing and safety glasses.
– Do not allow brake fluid to come into contact with the skin, the eyes, or clothing.
– Consult a doctor immediately if brake fluid has been ingested.
– Rinse the affected area with plenty of water in the event of contact with the skin.
– Rinse eyes thoroughly with water immediately and consult a doctor if brake fluid comes into contact with the eyes.
– If brake fluid spills on to your clothing, change the clothing.

NOTE

Environmental hazard Hazardous substances cause environmental damage.

– Dispose of oils, grease, filters, fuel, cleaning agents, brake fluid, etc. correctly and in accordance with the applicable regulations.

Note

Avoid contact between brake fluid and painted parts. Brake fluid corrodes paint.

Preparatory work

– Check that the brake pads of the rear brake are secured. (p. 86)
– Remove the frame protector. (p. 47)

Main work

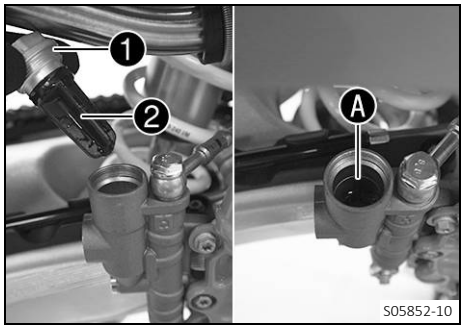

– Stand the vehicle upright.
– Remove screw cap 1 with diaphragm 2 and the O-ring.
– Add brake fluid to mark A.

Brake fluid DOT 5.1 (p. 143)

– Mount and tighten screw cap 1 with diaphragm 2 and the O-ring.

Immediately clean up any brake fluid that has overflowed or spilled with water.

Reworking

– Install the frame protector. (p. 47)

12.12 Checking that the brake pads of the rear brake are secured

WARNING

Danger of accidents Worn brake pads reduce the brake action.

– Make sure that worn brake pads are replaced immediately.

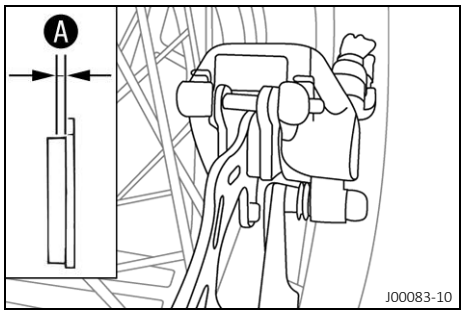

– Check all brake pads on both brake calipers for their lining thickness A.

Minimum pad thickness A	≥ 1 mm (≥ 0.04 in)

» If it is less than the minimum thickness:
  – Change the rear brake pads. (p. 87)
– Check the brake pads for damage and cracking.
» If there is damage or cracking:
  – Change the rear brake pads. (p. 87)
– Check that the brake pads are secured.
» If the brake pads are not secured correctly:
  – Secure brake pads, replace with new parts if necessary.

12.13 Changing the rear brake pads

WARNING
Danger of accidents Brake pads which have not been approved alter the braking action.
– Only use brake pads approved and recommended by the vehicle manufacturer.

WARNING
Danger of accidents Incorrect servicing will cause the brake system to fail.
– Ensure that service work and repairs are performed professionally.

WARNING
Danger of accidents Brake fluid which is too old or of the wrong type impairs the function of the brake system.
– Make sure that brake fluid for the front and rear brake is changed in accordance with the service schedule.
– Make sure that only clean, approved brake fluid from a tightly sealed container is used.

WARNING
Danger of accidents Oil, grease or wax on the brake discs reduces the brake action.
– Always keep the brake discs free of oil, fat and wax.
– Clean the brake discs with brake cleaner when necessary.

WARNING
Health hazard Brake fluid is a harmful substance.
– Keep brake fluid out of the reach of children.
– Wear suitable protective clothing and safety glasses.
– Do not allow brake fluid to come into contact with the skin, the eyes, or clothing.
– Consult a doctor immediately if brake fluid has been ingested.
– Rinse the affected area with plenty of water in the event of contact with the skin.
– Rinse eyes thoroughly with water immediately and consult a doctor if brake fluid comes into contact with the eyes.
– If brake fluid spills on to your clothing, change the clothing.

NOTE
Environmental hazard Hazardous substances cause environmental damage.
– Dispose of oils, grease, filters, fuel, cleaning agents, brake fluid, etc. correctly and in accordance with the applicable regulations.

Note
Avoid contact between brake fluid and painted parts. Brake fluid corrodes paint.

Preparatory work
– Remove the frame protector. (p. 47)

Main work
– Stand the vehicle upright.
– Remove screw cap ❶ with diaphragm ❷ and the O-ring.

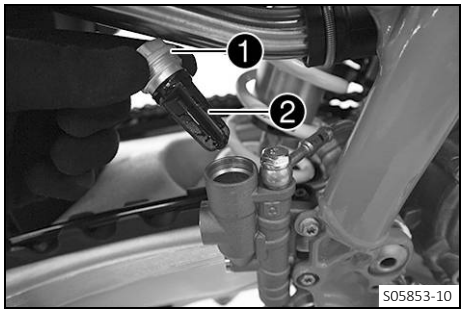

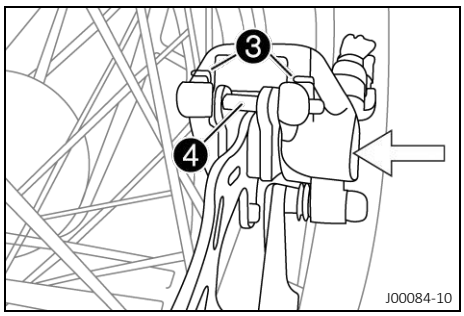

– Manually press the brake caliper toward the brake disc to push back the brake piston. Ensure that brake fluid does not flow out of the brake reservoir, and siphon off excess if required.
– Remove cotter pin ❸, pull out stud ❹, and remove the brake pads.
– Clean brake caliper and brake caliper support.

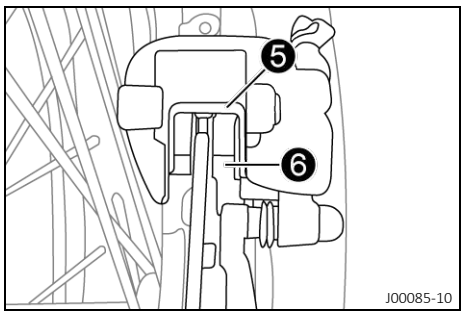

– Check that spring steel clip ❺ in the brake caliper and brake pad guide plate ❻ in the brake caliper support are properly seated.

Note
The arrow on the spring steel clip points in the rotation direction of the brake disc.

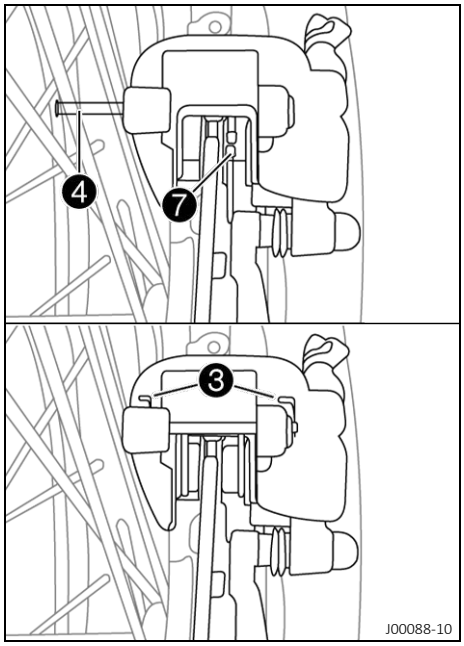

– Insert the new brake pads, mount stud ❹ and cotter pins ❸.

Always replace brake pads in sets.
Make sure that decoupling plate ❼ is mounted on the piston side of the brake pad.

– Actuate the brake disc repeatedly until the brake pads are in contact with the brake disc and a pressure point is achieved.

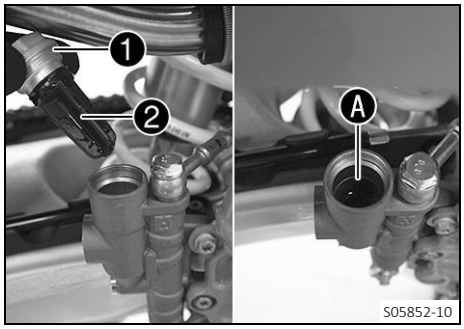

– Correct the brake fluid level to mark Ⓐ.

Brake fluid DOT 5.1 (p. 143)

– Mount and tighten screw cap ❶ with diaphragm ❷ and the O-ring.

Immediately clean up any brake fluid that has overflowed or spilled with water.

Reworking

– Install the frame protector. (p. 47)

13.1 Removing the front wheel

Preparatory work

– Raise the motorcycle with a lift stand. (p. 44)

Main work

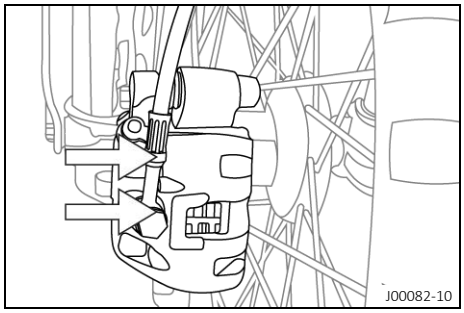

– Manually press the brake caliper toward the brake disc to push back the brake pistons.

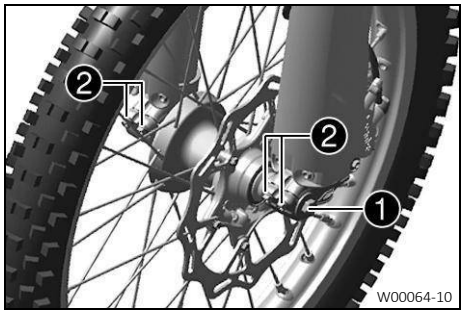

– Loosen screw ❶ by four turns.
– Loosen screws ❷.
– Press on screw ❶ to push the wheel spindle out of the fork shoe.
– Remove screw ❶.

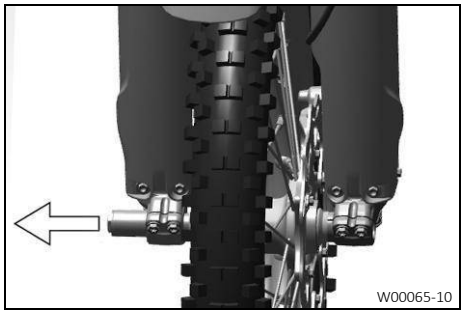

WARNING

Danger of accidents Damaged brake discs reduce the braking action.

– Always lay the wheel down in such a way that the brake disc is not damaged.

– Hold front wheel and remove wheel spindle. Take the front wheel out of the fork.

Do not actuate the hand brake lever when the front wheel is removed.

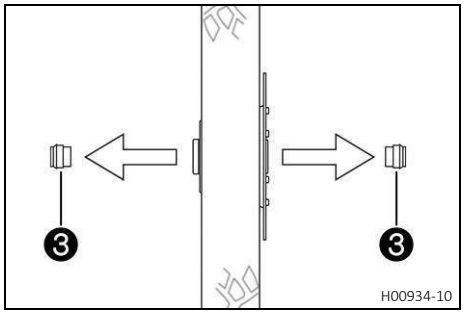

– Remove spacers ❸.

13.2 Installing the front wheel

WARNING

Danger of accidents Oil, grease or wax on the brake discs reduces the brake action.

- Always keep the brake discs free of oil, fat and wax.
- Clean the brake discs with brake cleaner when necessary.

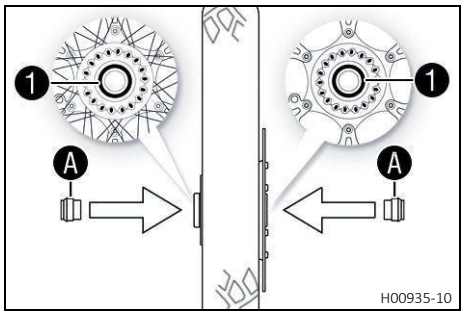

- Check the wheel bearing for damage and wear.
  - » If the wheel bearing is damaged or worn:
    - Change the front wheel bearing.
- Clean and grease radial shaft seal 1 and contact surfaces A on the spacers.

Long-life grease (p. 142)

- Insert spacers.
- Clean and lightly grease the wheel spindle.

Long-life grease (p. 142)

- Position the front wheel and insert the wheel spindle.
  - ✓ The brake pads are positioned correctly.

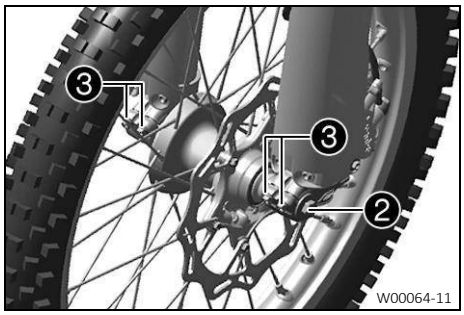

- Mount and tighten screw 2.

Screw, wheel spindle, front	
M20×1.5	35 Nm (25.8 ft·lb_f)

- Operate the hand brake lever several times until the brake pads are in contact with the brake disc.
- Remove the motorcycle from the lift stand. (p. 44)
- Operate the front brake and compress the fork a few times firmly.
  - ✓ The fork legs straighten.
- Tighten screws 3.

Screw, fork shoe	
M8×25	15 Nm (11.1 ft·lb_f)

13.3 Removing the rear wheel

Preparatory work

- Raise the motorcycle with a lift stand. (p. 44)

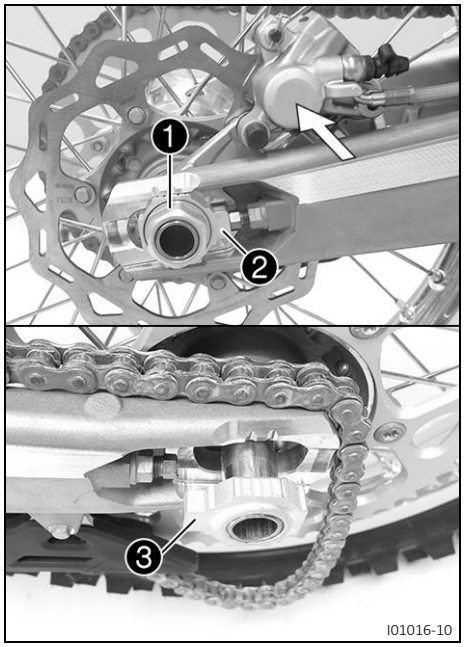

Main work

- Manually press the brake caliper toward the brake disc to push back the brake pistons.
- Remove nut ❶.
- Take off chain adjuster ❷.
- Pull out wheel spindle ❸ far enough to allow the rear wheel to be pushed forward.
- Push the rear wheel forward as far as possible.
- Remove the chain from the rear sprocket.

Protect the components against damage by covering them.

WARNING
Danger of accidents Damaged brake discs reduce the braking action.
- Always lay the wheel down in such a way that the brake disc is not damaged.

- Hold the rear wheel and remove wheel spindle. Take the rear wheel out of the swingarm.
- Take the rear wheel out of the swingarm.

Do not actuate the brake pedal when the rear wheel is removed.

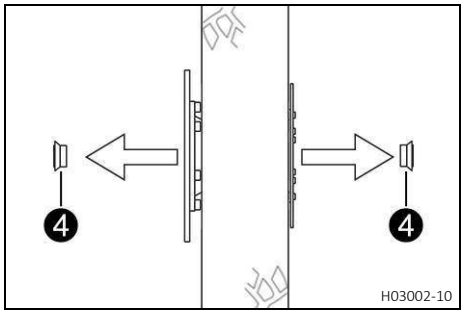

- Remove spacers ❹.

13.4 Installing the rear wheel

WARNING
Danger of accidents Oil, grease or wax on the brake discs reduces the brake action.
- Always keep the brake discs free of oil, fat and wax.
- Clean the brake discs with brake cleaner when necessary.

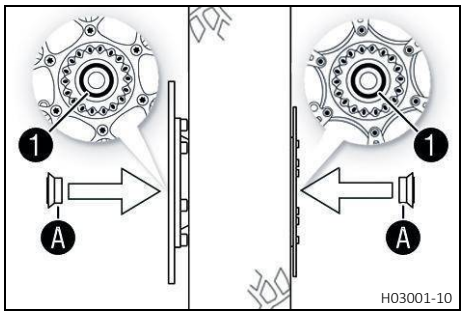

Main work

- Check the wheel bearing for damage and wear.
  - » If the wheel bearing is damaged or worn:
    - Change the rear wheel bearing.
- Clean and grease radial shaft seal ❶ and contact surfaces Ⓐ on the spacers.

Long-life grease (p. 142)

- Insert spacers.

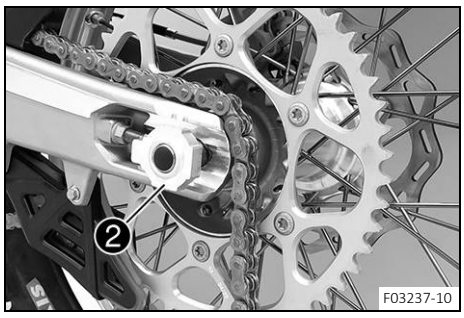

– Clean and lightly grease the wheel spindle.

Long-life grease (p. 142)

– Position rear wheel and insert wheel spindle ❷.
  ✓ The brake pads are positioned correctly.
– Attach the chain.

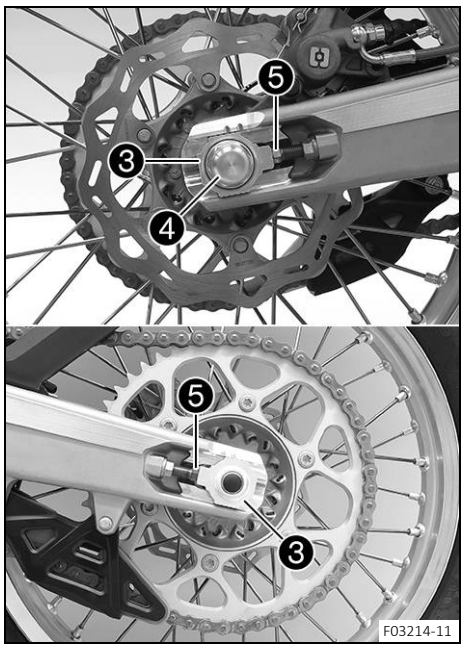

– Position chain adjuster ❸.
– Mount nut ❹ but do not tighten yet.
– Make sure that chain adjusters ❸ are fitted correctly on adjusting screws ❺.
– Check the chain tension. (p. 68)
– Tighten nut ❹.

Nut, wheel spindle, rear	
M22×1.5	80 Nm (59.0 ft·lb$_f$)

Note
Chain adjusters ❸ can be turned by 180°.

– Actuate the brake disc repeatedly until the brake pads are in contact with the brake disc and a pressure point is achieved.

Reworking

– Remove the motorcycle from the lift stand. (p. 44)

13.5 Checking the tire condition

Note
Only fit tires approved and/or recommended by GASGAS.
Other tires could have a negative effect on handling characteristics.
The type, condition, and pressure of the tires all have a major impact on the handling of the motorcycle.
The tires mounted on the front and rear wheels must have a similar profile.
Worn tires have a negative effect on handling characteristics, especially on wet surfaces.

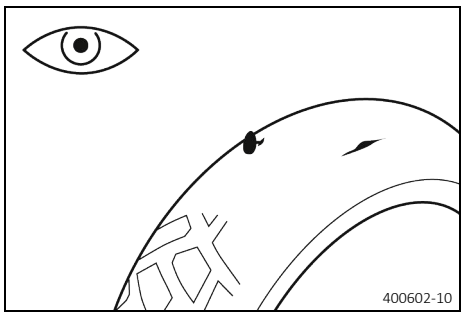

– Check the front and rear tires for cuts, embedded objects, and other damage.
  » If the tires have cuts, run-in objects, or other damage:
    – Change the tires.

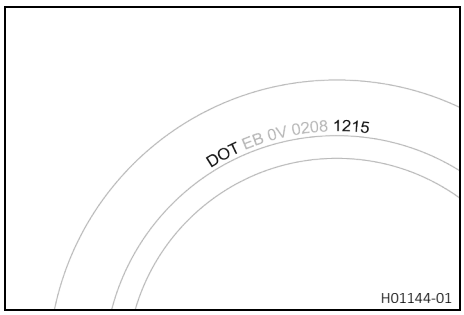

– Check the tire age.

Note
The tire date of manufacture is usually included on the tire label and is indicated by the last four digits of the **DOT** number. The first two digits indicate the week of manufacture and the last two digits the year of manufacture.
GASGAS recommends that the tires be changed after five years at the latest, regardless of the actual wear.

» If the tires are older than five years:
  – Change the tires.

13.6 Checking the tire pressure

Note
Low tire pressure leads to abnormal wear and the tire overheating.
Correct tire pressure ensures optimal riding comfort and maximum tire service life.

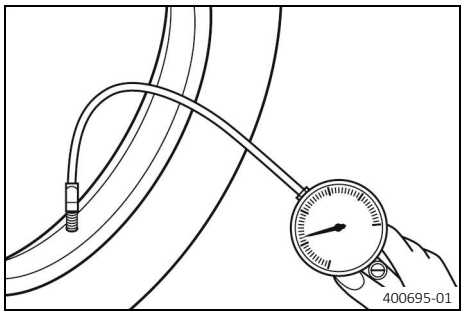

– Remove the protection cap.
– Check the tire pressure when the tires are cold.

Off-road tire pressure	
front	1.0 bar (14.5 psi)
rear	1.0 bar (14.5 psi)

» If the tire pressure does not meet specifications:
  – Correct tire pressure.
– Mount the protection cap.

13.7 Checking the spoke tension

WARNING
Danger of accidents Incorrectly tensioned spokes impair the handling characteristic and can result in secondary damage.
If the spokes are too tight, they can break due to being overloaded.
Loose spokes can cause lateral or radial run-out in the wheel and other spokes will loosen as a result.
– Check the spoke tension regularly, especially on a new vehicle.

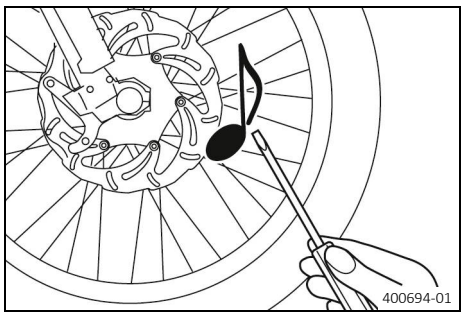

– Briefly tap each spoke with a screwdriver.

You should hear a high-pitched sound.

Note

The frequency of the sound depends on the spoke length and spoke diameter.

If you hear different pitches on different spokes of equal length and diameter, this is an indication of different spoke tensions.

» If the spoke tension differs:

  – Correct the spoke tension.

– Check the spoke torque.

Spoke nipple, front wheel	
M4,5	6 Nm (4.4 ft·lb_f)
Spoke nipple, rear wheel	
M4,5	6 Nm (4.4 ft·lb_f)

Torque wrench kit (58429094000)

14.1 Removing the 12 V battery

WARNING

Risk of injury 12-V batteries contain harmful substances.

- Keep 12-V batteries out of the reach of children.
- Keep the battery away from sparks or open flames.
- Only charge batteries in well-ventilated rooms.
- Maintain a minimum distance from flammable materials when charging 12-V batteries.

Minimum distance	1 m (3 ft – 3 in)

- Do not charge deeply discharged 12- V batteries if the charge is already below the minimum voltage.

Minimum voltage before starting charging	9 V

- Dispose of 12 V batteries correctly if they have less than the minimum voltage.

NOTE

Environmental hazard 12-V batteries contain environmentally-hazardous materials.

- Do not dispose of 12-V batteries as household waste.
- Dispose of 12-V batteries at a collection point for used batteries.

NOTE

Environmental hazard Hazardous substances cause environmental damage.

- Dispose of oils, grease, filters, fuel, cleaning agents, brake fluid, etc. correctly and in accordance with the applicable regulations.

Preparatory work

- Remove air filter box cover. (p. 59)
- Remove the seat. (p. 57)

Main work

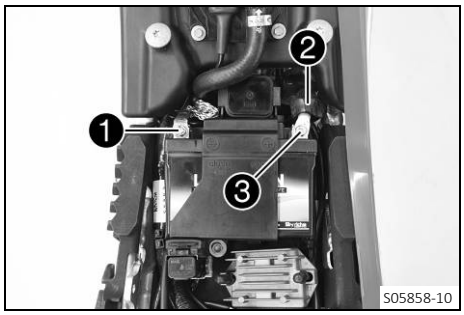

- Disconnect negative cable ❶ from the 12 V battery.
- Pull back positive terminal cover ❷ and disconnect positive cable ❸ from the 12-V battery.

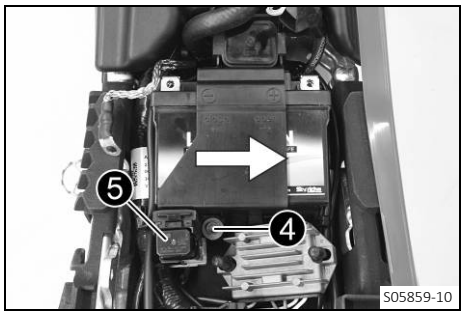

- Remove screw ❹.
- Pull starter relay ❺ off the holder and hang to the side.

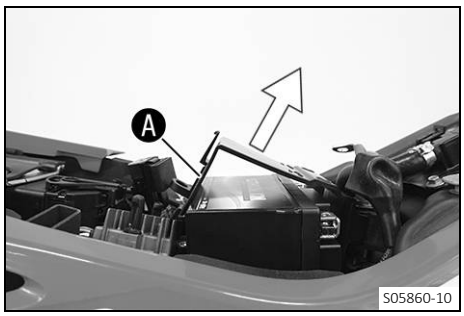

– Pull up battery holding bracket Ⓐ and remove the 12-V battery to the rear.

Pay attention to the wiring harness.

14.2 Installing the 12 V battery

Main work

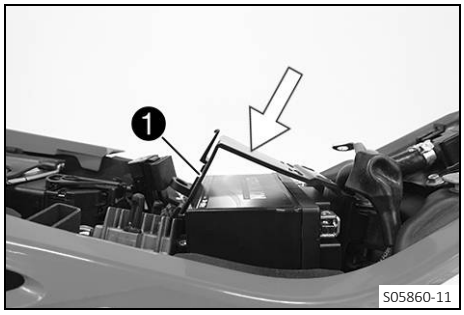

– Pull up battery holding bracket ❶, insert the 12-V battery into the battery compartment with the terminals facing upwards and secure with battery holding bracket ❶.

Ensure that the cable is routed correctly.

12-V battery (HJTZ5S-FP-C) (p. 145)

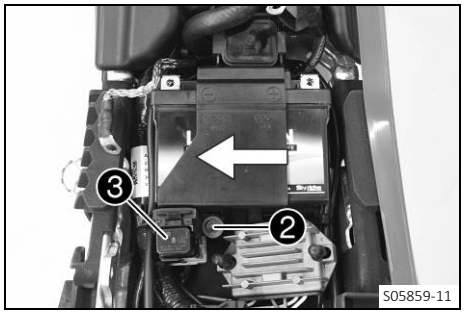

– Mount and tighten screw ❷.

Remaining screws on chassis	
M6	10 Nm (7.4 ft·lb$_f$)

– Mount starter relay ❸ onto the bracket and route the cable.

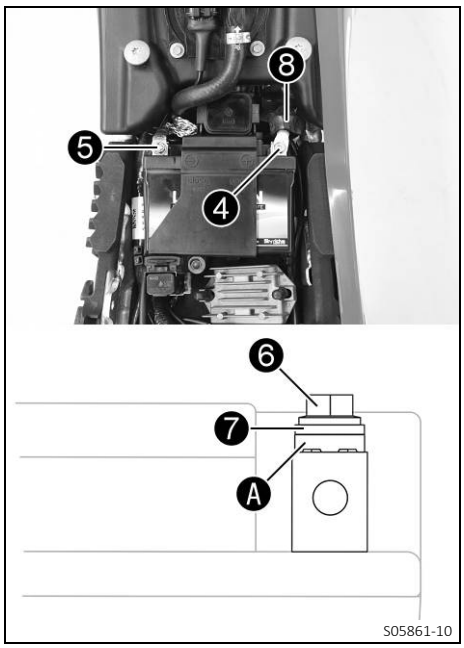

– Connect positive cable ❹ to the 12 V battery.

Screw, battery terminal	
M5	2.5 Nm (1.84 ft·lb$_f$)

– Connect negative cable ❺ to the 12 V battery.

Screw, battery terminal	
M5	2.5 Nm (1.84 ft·lb$_f$)

Contact disks Ⓐ must be mounted under screws ❻ and cable lug ❼ with the claws toward the battery terminal.

– Slide positive terminal cover ❽ over the positive terminal.

Reworking

– Mount the seat. (p. 58)
– Installing air filter box cover (p. 59)

14.3 Charging the 12 V battery

WARNING

Risk of injury 12-V batteries contain harmful substances.

– Keep 12-V batteries out of the reach of children.
– Keep the battery away from sparks or open flames.
– Only charge batteries in well-ventilated rooms.
– Maintain a minimum distance from flammable materials when charging 12-V batteries.

Minimum distance	1 m (3 ft – 3 in)

– Do not charge deeply discharged 12- V batteries if the charge is already below the minimum voltage.

Minimum voltage before starting charging	9 V

– Dispose of 12 V batteries correctly if they have less than the minimum voltage.

NOTE

Environmental hazard 12-V batteries contain environmentally-hazardous materials.

– Do not dispose of 12-V batteries as household waste.
– Dispose of 12-V batteries at a collection point for used batteries.

NOTE

Environmental hazard Hazardous substances cause environmental damage.

– Dispose of oils, grease, filters, fuel, cleaning agents, brake fluid, etc. correctly and in accordance with the applicable regulations.

Note

Even when there is no load on the 12 V battery, it discharges steadily each day.

The state of charge and the method of charging are very important for the service life of the 12 V battery.

Rapid recharging with a high charging current shortens the service life of the battery.

If the charging current or charging voltage are exceeded, the 12-V battery will be irreparably damaged.

If the 12 V battery is left in a discharged state for an extended period, it will become deeply discharged and suffer a loss of capacity, destroying the battery.

The 12 V battery is maintenance-free.

Preparatory work

- Remove air filter box cover. (p. 59)
- Remove the seat. (p. 57)
- Remove the 12 V battery. (p. 96)

Main work

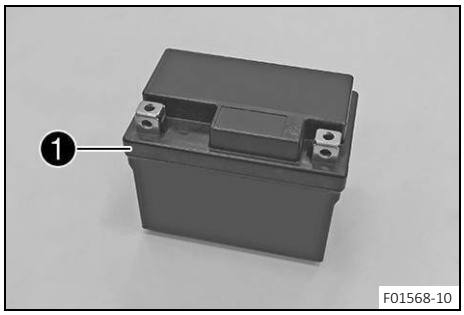

- Do not remove cover 1.
- Check the battery voltage.

» Battery voltage:
  - < 9 V
  – Do not charge the 12 V battery.
  – Replace the 12 V battery and dispose of the old 12 V battery properly.

» If the specifications have been met:
  Battery voltage:
  - ≥ 9 V
  – Connect a charger to the 12 V battery. Switch the charger on.

Read the accompanying instructions.	
Maximum charging voltage	14.4 V
Minimum charging voltage	3.0 A
Maximum charging time	12 h
The charging current, charging voltage, and charging time must not be exceeded.	
If the 12 V battery is depleted from starting the vehicle repeatedly, the battery must be charged immediately.	
Recharge the 12 V battery regularly when the motorcycle is not being used.	3 months

Work material (Alternative 1 / 2)
Battery charger (26529974000)
Work material (Alternative 2 / 2)
(US) battery charger (26529974500)

Note

This charger tests whether the 12 V battery retains its voltage. It is also impossible to overcharge the 12 V battery with this charger. The charging time may be longer at low temperatures.

These chargers are only suitable for lithium iron phosphate batteries.

– Switch off the charger after charging and disconnect from the 12 V battery.

Reworking

– Install the 12 V battery. (p. 97)
– Mount the seat. (p. 58)
– Installing air filter box cover (p. 59)

14.4 Changing the main fuse

WARNING

Fire hazard Incorrect fuses overload the electrical system.

- Use only fuses with the prescribed amperage.
- Do not bypass or repair fuses.

Note

The main fuse protects all electrical power loads of the vehicle. The main fuse is located in the starter relay housing under the seat.

Preparatory work

- Remove the frame protector. (p. 47)
- Remove the right side panel. (p. 46)
- Remove air filter box cover. (p. 59)
- Remove the seat. (p. 57)
- Remove the fuel tank. (p. 64)

Main work

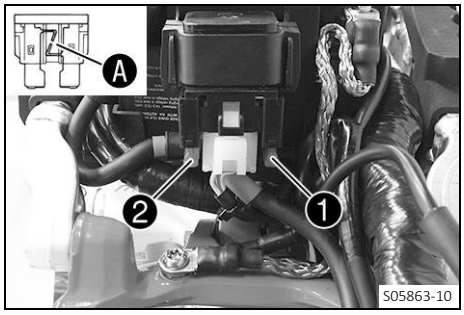

- Remove the protection caps.
- Remove faulty main fuse 1.

Note

A faulty fuse has a burned-out fuse wire A.

A spare fuse 2 is located in the starter relay.

- Insert the main fuse.

Fuse (58011109110) (p. 145)

- Check that the electrical equipment is functioning properly.

Tip

Insert a new spare fuse so that it is available if needed.

- Mount the protection caps.

Reworking

- Install the fuel tank. (p. 66)
- Mount the seat. (p. 58)
- Installing air filter box cover (p. 59)
- Install the right side panel. (p. 47)
- Install the frame protector. (p. 47)

14.5 Changing the fuse of the fuel pump

WARNING

Fire hazard Incorrect fuses overload the electrical system.

– Use only fuses with the prescribed amperage.
– Do not bypass or repair fuses.

CAUTION

Danger of burns The regulator rectifier gets very hot when the vehicle is operated.

– Allow the regulator rectifier to cool down before performing any work.

Note

The fuel pump is protected by the fuel pump fuse. The fuse is located under the seat.

Preparatory work

– Remove air filter box cover. (p. 59)
– Remove the seat. (p. 57)

Main work

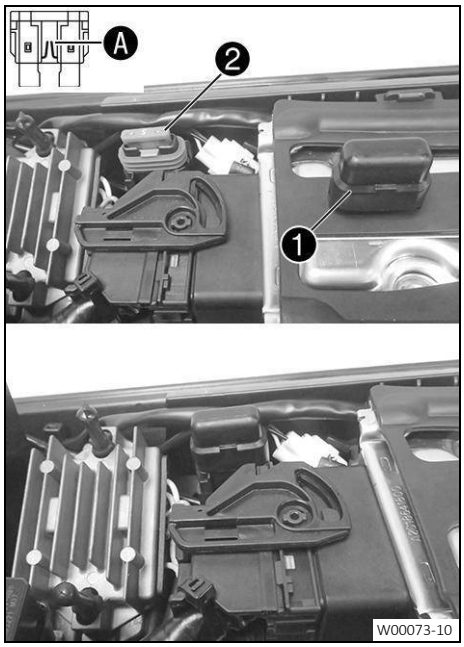

– Remove protection cap 1.
– Remove faulty main fuse 2.

Note

A faulty fuse has a burned-out fuse wire A.

– Put in the new fuse for the fuel pump.

Fuse (58011109105) (p. 145)

– Check that the electrical equipment is functioning properly.
– Attach protection cap 1.

Reworking

– Mount the seat. (p. 58)
– Installing air filter box cover (p. 59)

14.6 Diagnostic connector

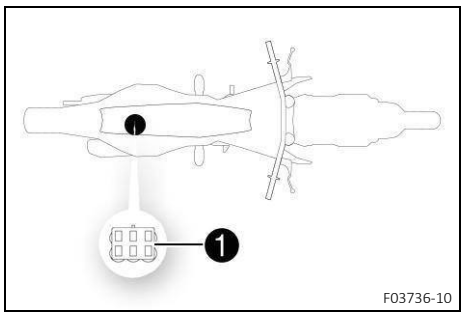

Diagnostic connector 1 is located under the seat below the engine control unit.

Note

As soon as the diagnostics tool is connected, the hourmeter starts running.

Before longer diagnostic sessions, unplug the hourmeter behind the number plate.

15.1 Programming the end positions of the exhaust control

Note
If work has been carried out on the exhaust control, the end positions must be reprogrammed.

Condition: Engine is off

Preparatory work

– Remove air filter box cover. (p. 59)
– Remove the seat. (p. 57)

Main work

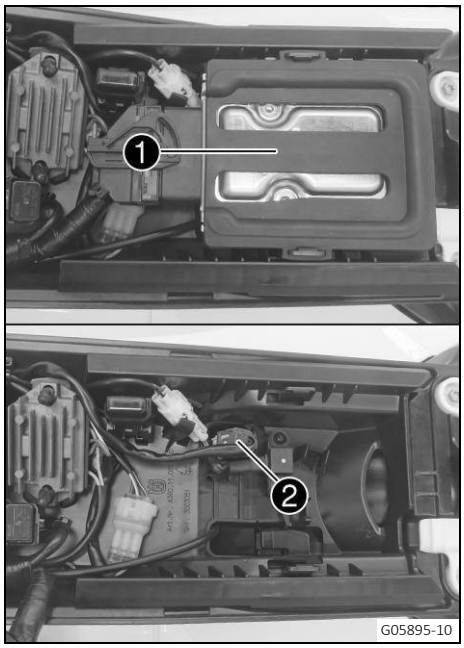

– Pull engine control unit 1 upward and off the bracket and hang to the side.
– Pull diagnostics connector 2 off the holder.

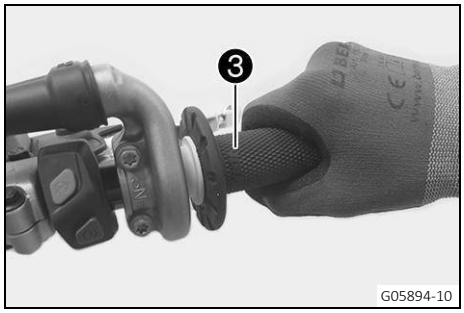

– Move throttle twist grip 3 to where it is half open and hold in position.

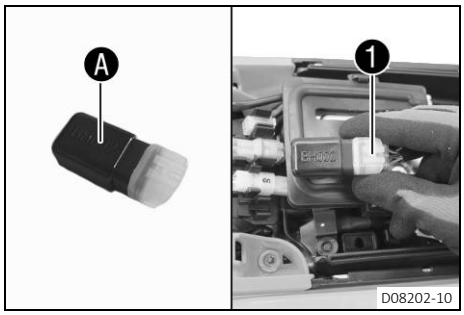

– Plug wake-up connector A into diagnostics connector 2.

Note
Wake-up connector A is in the motorcycle's accessory pack.

– Wait for at least five seconds.
  ✓ The end positions of the exhaust control are read. The procedure is clearly audible.
  ✓ The dashboard illumination is activated, the combination switch lights up green.
– Release the fixing from the throttle grip.

✓ The end positions of the exhaust control are programmed.

– Wait until you can no longer hear the exhaust control engine operating.
– Disconnect wake-up connector Ⓐ from diagnostic connector ❷.

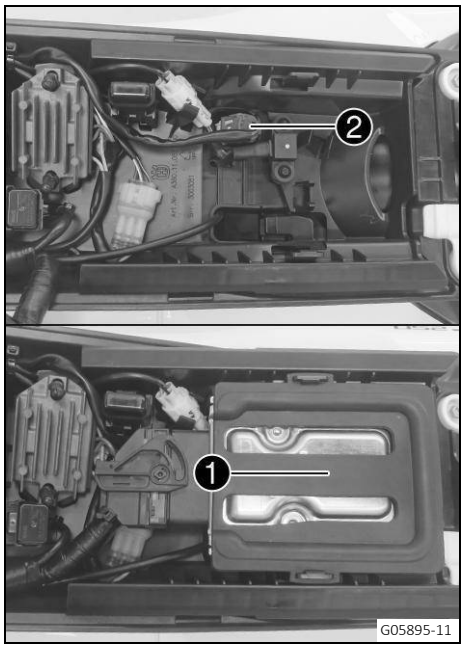

– Mount diagnostics connector ❷ on the holder.
– Mount engine control unit ❶ on the bracket.

Reworking

– Mount the seat. (p. 58)
– Installing air filter box cover (p. 59)

16.1 Cooling system

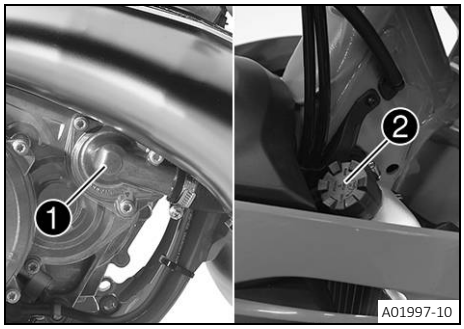

Water pump ❶ in the engine circulates the coolant.

The pressure resulting from the warming of the cooling system is regulated by a valve in radiator cap ❷. This ensures that operating the vehicle at the specified coolant temperature will not result in a risk of malfunctions.

120 °C (248.0 °F)

The coolant is cooled by the air stream.

The lower the vehicle speed, the lower the cooling effect. Dirty cooling fins also reduce the cooling effect.

16.2 Checking the frost protection and coolant level

WARNING

Health hazard Coolant is harmful to health.

- Keep coolant out of the reach of children.
- Do not allow coolant to come into contact with skin, eyes, or clothing.
- Consult a doctor immediately if coolant has been ingested.
- Rinse the affected area immediately with plenty of water in the event of contact with skin.
- Rinse eyes thoroughly with water and consult a doctor immediately if coolant comes into contact with eyes.
- If coolant spills on to your clothing, change the clothing.
- Store coolant properly in a suitable container and keep out of the reach of children.

WARNING

Danger of scalding The coolant heats up and is under high pressure when the vehicle is operated.

- Do not open the radiator, the radiator hoses, or other cooling system components if the engine or the cooling system are at operating temperature.
- Allow the cooling system and the engine to cool down before you open the radiator, the radiator hoses, or other components of the cooling system.
- In the event of scalding, rinse the area affected immediately with lukewarm water.

Condition: The engine is cold

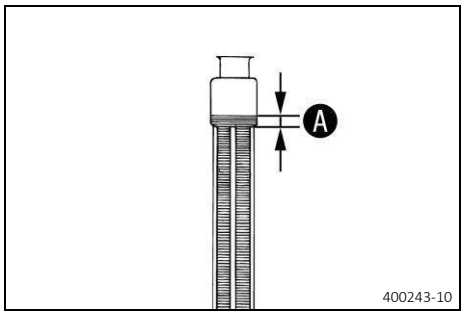

- Stand the motorcycle upright on a level surface.
- Take off the radiator cap.
- Check the frost protection in the coolant.

−45 °C … −25 °C (−49.0 °F … −13.0 °F)

  » If the frost protection in the coolant does not match the specified value:
    - Correct the frost protection in the coolant.
- Check the coolant level in the radiator.

Coolant level Ⓐ above the radiator fins	10 mm (0.39 in)

» If the coolant level does not meet the specifications:
  – Correct the coolant level.

coolant	
Coolant (p. 143) Antifreeze protection to at least: −25 °C (−13.0 °F)	0.95 l (0.251 liq. gal_{US})

– Mount the radiator cap.

16.3 Checking the coolant level

WARNING
Health hazard Coolant is harmful to health.
– Keep coolant out of the reach of children.
– Do not allow coolant to come into contact with skin, eyes, or clothing.
– Consult a doctor immediately if coolant has been ingested.
– Rinse the affected area immediately with plenty of water in the event of contact with skin.
– Rinse eyes thoroughly with water and consult a doctor immediately if coolant comes into contact with eyes.
– If coolant spills on to your clothing, change the clothing.
– Store coolant properly in a suitable container and keep out of the reach of children.

WARNING
Danger of scalding The coolant heats up and is under high pressure when the vehicle is operated.
– Do not open the radiator, the radiator hoses, or other cooling system components if the engine or the cooling system are at operating temperature.
– Allow the cooling system and the engine to cool down before you open the radiator, the radiator hoses, or other components of the cooling system.
– In the event of scalding, rinse the area affected immediately with lukewarm water.

Condition: The engine is cold

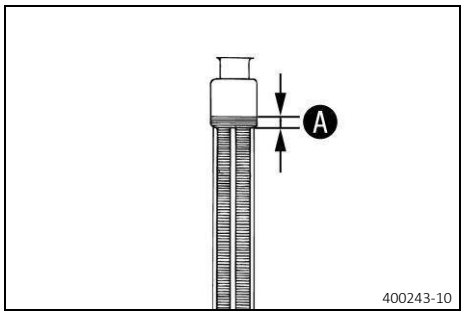

– Stand the motorcycle upright on a level surface.
– Take off the radiator cap.
– Check the coolant level in the radiator.

Coolant level A above the radiator fins	10 mm (0.39 in)

» If the coolant level does not meet the specifications:
  – Correct the coolant level.

coolant	
Coolant (p. 143) Antifreeze protection to at least: −25 °C (−13.0 °F)	0.95 l (0.251 liq. gal_{US})

– Mount the radiator cap.

16.4 Draining the coolant

WARNING
Health hazard Coolant is harmful to health.
- Keep coolant out of the reach of children.
- Do not allow coolant to come into contact with skin, eyes, or clothing.
- Consult a doctor immediately if coolant has been ingested.
- Rinse the affected area immediately with plenty of water in the event of contact with skin.
- Rinse eyes thoroughly with water and consult a doctor immediately if coolant comes into contact with eyes.
- If coolant spills on to your clothing, change the clothing.
- Store coolant properly in a suitable container and keep out of the reach of children.

WARNING
Danger of scalding The coolant heats up and is under high pressure when the vehicle is operated.
- Do not open the radiator, the radiator hoses, or other cooling system components if the engine or the cooling system are at operating temperature.
- Allow the cooling system and the engine to cool down before you open the radiator, the radiator hoses, or other components of the cooling system.
- In the event of scalding, rinse the area affected immediately with lukewarm water.

Condition: The engine is cold

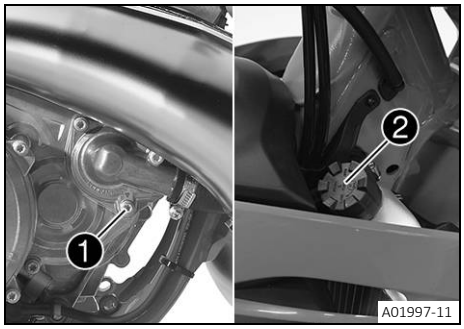

- Stand the motorcycle upright.
- Place an appropriate container under the water pump cover.
- Remove screw 1.
- Take off radiator cap 2.
- Completely drain the coolant.
- Mount screw 1 with the new sealing ring and tighten.

Screw, water pump cover	
M6	10 Nm (7.4 ft·lb_f)

16.5 Refilling the coolant

WARNING
Health hazard Coolant is harmful to health.
- Keep coolant out of the reach of children.
- Do not allow coolant to come into contact with skin, eyes, or clothing.
- Consult a doctor immediately if coolant has been ingested.
- Rinse the affected area immediately with plenty of water in the event of contact with skin.
- Rinse eyes thoroughly with water and consult a doctor immediately if coolant comes into contact with eyes.
- If coolant spills on to your clothing, change the clothing.
- Store coolant properly in a suitable container and keep out of the reach of children.

Main work

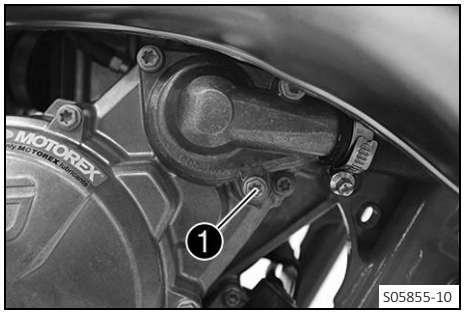

– Make sure that screw ❶ is tightened.
– Stand the motorcycle upright.

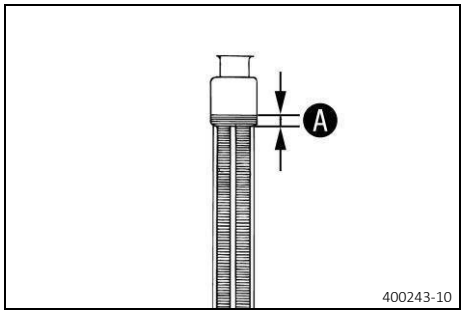

– Pour coolant in up to level Ⓐ above the radiator fins.

10 mm (0.39 in)

coolant	
Coolant (p. 143) Antifreeze protection to at least: −25 °C (−13.0 °F)	0.95 l (0.251 liq. gal_{US})

– Remove screw ❷ and wait until coolant emerges without bubbles.
– Mount and tighten screw ❷.

Cylinder head bleed screw	
M6	8 Nm (5.9 $ft{\cdot}lb_f$)

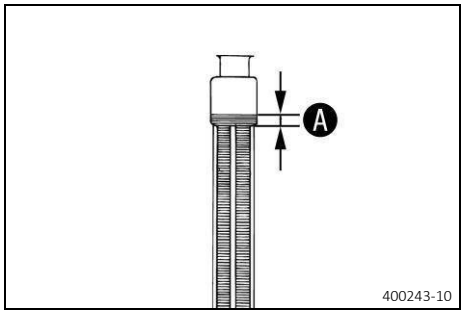

– Pour coolant in up to level Ⓐ above the radiator fins.

10 mm (0.39 in)

coolant	
Coolant (p. 143) Antifreeze protection to at least: −25 °C (−13.0 °F)	0.95 l (0.251 liq. gal_{US})

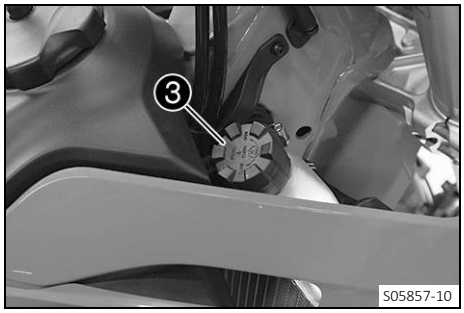

– Mount radiator cap ❸.

DANGER

Danger of poisoning Exhaust gases are toxic and inhaling them may result in unconsciousness and death.

– Always ensure that there is sufficient ventilation when running the engine.
– Use suitable exhaust extraction when starting or running the engine in an enclosed space.

– Allow the engine to warm up and cool down again.
– Check the transmission and cooling system for leaks.

Reworking

– Check the coolant level. (p. 107)

16.6 Changing the coolant

WARNING

Health hazard Coolant is harmful to health.

– Keep coolant out of the reach of children.
– Do not allow coolant to come into contact with skin, eyes, or clothing.
– Consult a doctor immediately if coolant has been ingested.
– Rinse the affected area immediately with plenty of water in the event of contact with skin.
– Rinse eyes thoroughly with water and consult a doctor immediately if coolant comes into contact with eyes.
– If coolant spills on to your clothing, change the clothing.
– Store coolant properly in a suitable container and keep out of the reach of children.

WARNING

Danger of scalding The coolant heats up and is under high pressure when the vehicle is operated.

– Do not open the radiator, the radiator hoses, or other cooling system components if the engine or the cooling system are at operating temperature.
– Allow the cooling system and the engine to cool down before you open the radiator, the radiator hoses, or other components of the cooling system.
– In the event of scalding, rinse the area affected immediately with lukewarm water.

Condition: The engine is cold

Main work

– Stand the motorcycle upright.
– Place an appropriate container under the water pump cover.

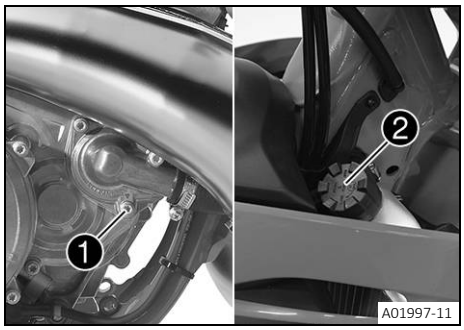

– Remove screw 1.
– Take off radiator cap 2.
– Completely drain the coolant.
– Mount screw 1 with the new sealing ring and tighten.

Screw, water pump cover	
M6	10 Nm (7.4 ft·lb_f)

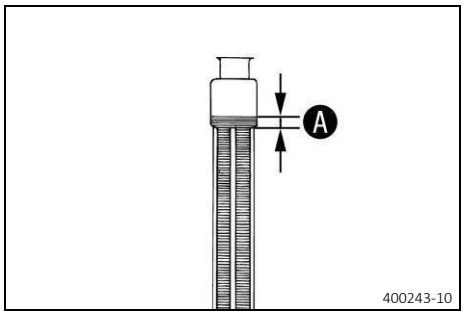

– Pour coolant in up to level A above the radiator fins.

10 mm (0.39 in)

coolant	
Coolant (p. 143) Antifreeze protection to at least: −25 °C (−13.0 °F)	0.95 l (0.251 liq. gal_{US})

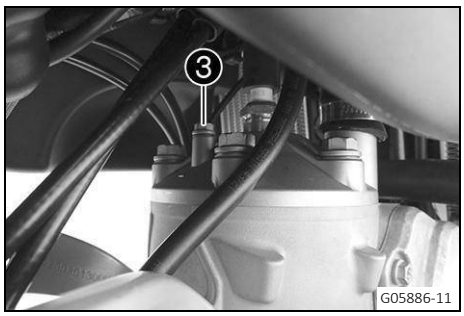

– Remove screw ❸ and wait until coolant emerges without bubbles.
– Mount and tighten screw ❸.

Cylinder head bleed screw	
M6	8 Nm (5.9 ft·lb$_f$)

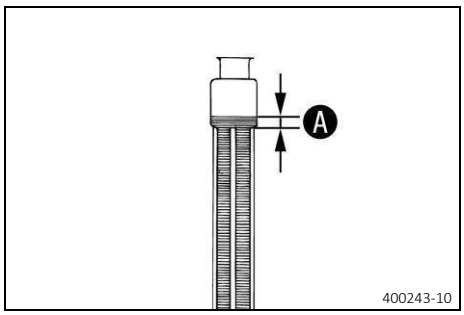

– Pour coolant in up to level Ⓐ above the radiator fins.

10 mm (0.39 in)

coolant	
Coolant (p. 143) Antifreeze protection to at least: −25 °C (−13.0 °F)	0.95 l (0.251 liq. gal$_{US}$)

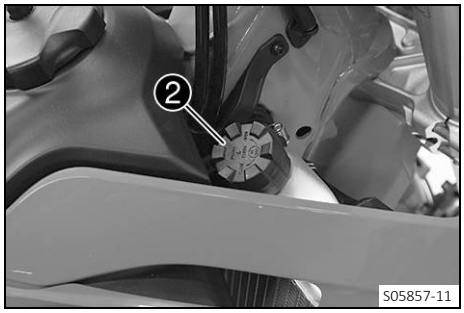

– Mount and tighten radiator cap ❷.

DANGER

Danger of poisoning Exhaust gases are toxic and inhaling them may result in unconsciousness and death.

– Always ensure that there is sufficient ventilation when running the engine.
– Use suitable exhaust extraction when starting or running the engine in an enclosed space.

– Allow the engine to warm up and cool down again.
– Check the transmission and cooling system for leaks.

Reworking

– Check the coolant level. (p. 107)

17.1 Checking the play in the throttle cable

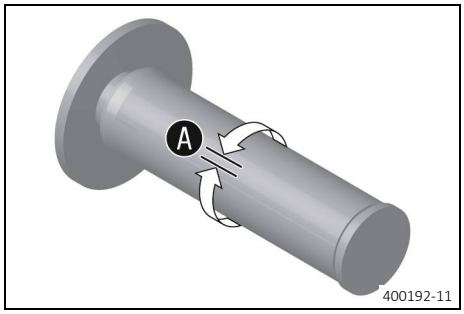

– Check the throttle grip for smooth operation.
– Move the handlebar to the straight-ahead position. Turn the throttle twist grip back and forth slightly and determine the play in throttle cable A.

Throttle cable play	2 mm … 3 mm (0.08 in … 0.12 in)

» If the throttle cable play does not meet the specified value:
  – Adjust the throttle cable play. (p. 112)

– Press the cold start button in all the way to the stop.

When the throttle twist grip is turned forward, the cold start button jumps back to the start position.

» If the cold start button does not return to its original position:
  – Adjust the throttle cable play. (p. 112)

DANGER
Danger of poisoning Exhaust gases are toxic and inhaling them may result in unconsciousness and death.
– Always ensure that there is sufficient ventilation when running the engine.
– Use suitable exhaust extraction when starting or running the engine in an enclosed space.

– Start the engine and let it run at idle speed. Move the handlebar back and forth over the entire steering range.

The idle speed must not change.

» If the idle speed changes:
  – Adjust the throttle cable play. (p. 112)

17.2 Adjusting the throttle cable play

Note
If the correct routing of the throttle cables has already been secured, the fuel tank does not need to be removed.

Preparatory work
– Remove the frame protector. (p. 47)
– Remove the right side panel. (p. 46)
– Remove air filter box cover. (p. 59)
– Remove the seat. (p. 57)
– Remove the fuel tank. (p. 64)
– Check the throttle cable routing. (p. 73)

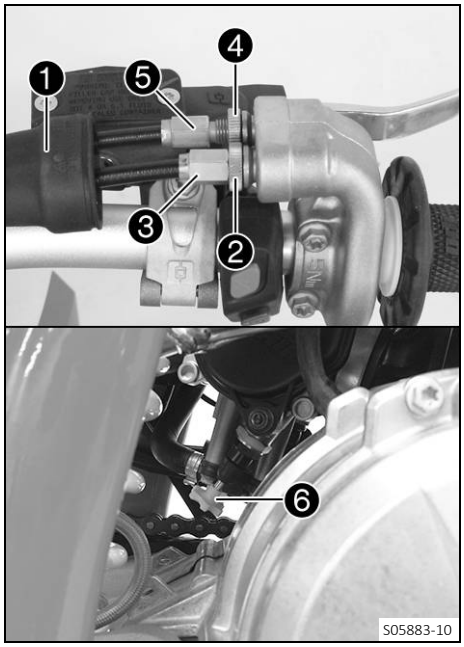

Main work

- Move the handlebar to the straight-ahead position.
- Push back boot ❶.
- Loosen nut ❷.
- Screw adjusting screw ❸ in as far as possible.
- Loosen nut ❹.
- Press cold start button ❻ all the way to the stop.
- Turn adjusting screw ❺ so that the cold start button moves to the basic position when the throttle twist grip is turned forward.
- Tighten nut ❹.
- Turn adjusting screw ❸ so that there is play in the throttle cable at the throttle twist grip.

Throttle cable play	2 mm … 3 mm (0.08 in … 0.12 in)

- Tighten nut ❷.
- Slide on boot ❶.
- Check the throttle grip for smooth operation.

Reworking

- Install the fuel tank. (p. 66)
- Mount the seat. (p. 58)
- Installing air filter box cover (p. 59)
- Install the right side panel. (p. 47)
- Install the frame protector. (p. 47)
- Check the play in the throttle cable. (p. 112)

17.3 Adjusting the idle speed

WARNING
Danger of accidents The engine may suddenly come to a halt if the idle speed is set too low.
- Set the idle speed to the specified value.

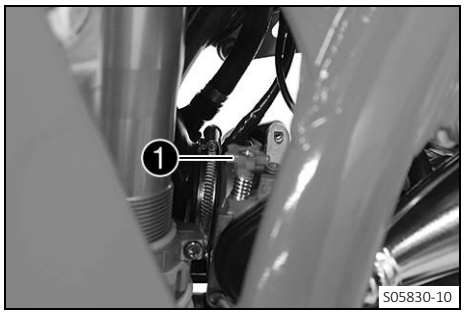

- Run the engine until warm.
  ✓ The cold start button is in the basic position.

DANGER
Danger of poisoning Exhaust gases are toxic and inhaling them may result in unconsciousness and death.
- Always ensure that there is sufficient ventilation when running the engine.
- Use suitable exhaust extraction when starting or running the engine in an enclosed space.

- Adjust the idle speed by turning idle speed adjusting screw ❶ using a suitable rpm gauge.

Make the adjustment in small steps.	
idle speed	1,500 rpm … 1,700 rpm (25.00 Hz … 28.33 Hz)

Note
Turning counterclockwise lowers the idle speed.
Turning clockwise increases the idle speed.
An incorrect idle speed can have a negative impact on overall engine running.

17.4 Checking the basic position of the gear shift lever

Note
When driving, the gear shift lever must not touch the rider's boot when in the basic position.
When the gear shift lever keeps touching the boot, the transmission will be subject to an excessive load.

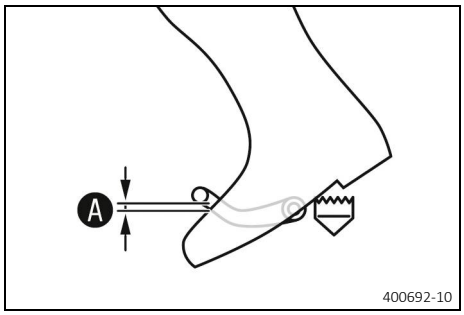

– Sit on the vehicle in the riding position and measure the distance A between the upper edge of your boot and the shift lever.

Distance between the gear shift lever and upper edge of boot	10 mm … 20 mm (0.39 in … 0.79 in)

» If the distance does not meet the specifications:
  – Adjust the basic position of the gear shift lever. (p. 114)

17.5 Adjusting the basic position of the gear shift lever

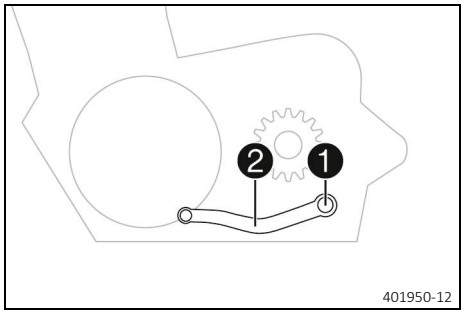

– Remove screw 1 with the washers and take off shift lever 2.

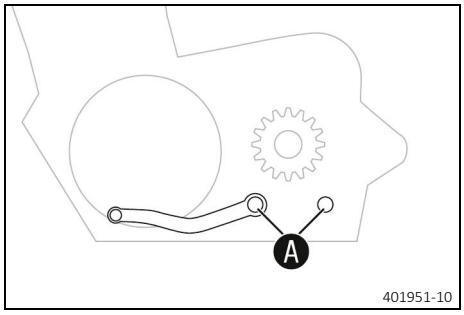

– Clean gear teeth A of the shift lever and shift shaft.
– Mount the gear shift lever on the shift shaft in the desired position and engage the toothing.

The gear shift lever must not come into contact with any other vehicle components during the shift procedure.

Note
The range of adjustment is limited.

– Mount and tighten screw ❶ with washers.

Screw, shift lever	
M6	14 Nm (10.3 ft·lb_f) **Loctite® 243**

18.1 Changing the fuel screen

DANGER

Fire hazard Fuel is highly flammable.

The fuel in the fuel tank expands when warm and can escape if overfilled.

- Do not refuel the vehicle in the vicinity of open flames, glowing, or smoldering objects.
- Make sure that nobody smokes in the vicinity of the vehicle during the refueling process.
- Switch off the engine for refueling.
- Make sure that no fuel is spilled; particularly not on hot parts of the vehicle.
- If any fuel is spilled, wipe it up immediately.
- Do not overfill the fuel tank.

WARNING

Danger of poisoning Fuel is harmful to health.

- Do not allow fuel to come into contact with skin, eyes, or clothing.
- Consult a doctor immediately if fuel has been ingested.
- Do not inhale fuel vapors.
- Rinse the affected area immediately with plenty of water in the event of contact with skin.
- Rinse eyes thoroughly with water and consult a doctor immediately if fuel comes into contact with eyes.
- If fuel spills on to your clothing, change the clothing.
- Store fuel properly in a suitable container and keep out of the reach of children.

NOTE

Environmental hazard Improper handling of fuel is dangerous to the environment.

- Do not allow fuel to enter the groundwater, the soil, or the sewage system.

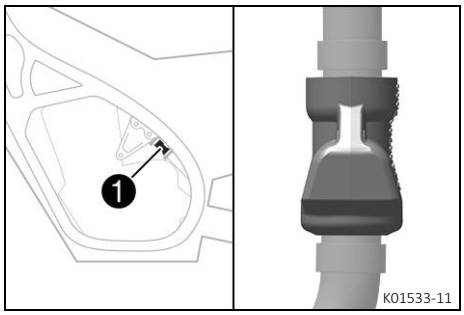

- Remove fuel line protection cap 1.

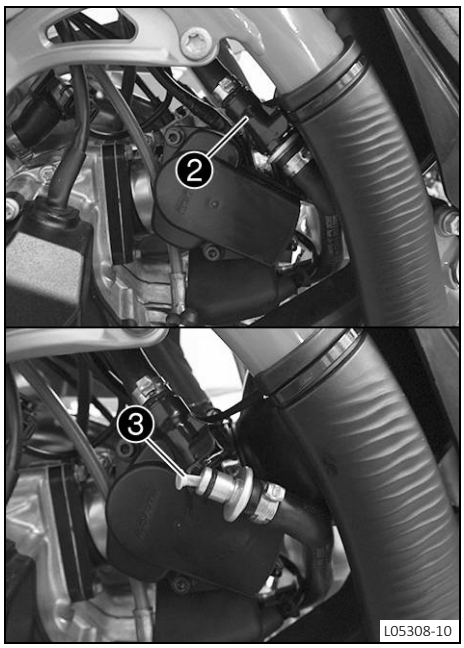

– Clean quick-lock coupling ❷ thoroughly with compressed air.

Dust must not enter the fuel line. Dirt in the fuel line clogs the injector!

– Disconnect the quick-lock coupling.

Note
Remaining fuel may flow out of the fuel hose.

– Pull fuel screen ❸ out of the connecting piece.
– Slide the new fuel screen all the way into the connecting piece.
– Spray silicone spray onto a lint-free cleaning cloth and lightly lubricate the O-ring of the quick-lock coupling.

Silicone spray (p. 143)

– Join quick-lock couplings.

DANGER
Danger of poisoning Exhaust gases are toxic and inhaling them may result in unconsciousness and death.
– Always ensure that there is sufficient ventilation when running the engine.
– Use suitable exhaust extraction when starting or running the engine in an enclosed space.

– Start the engine and check the response.

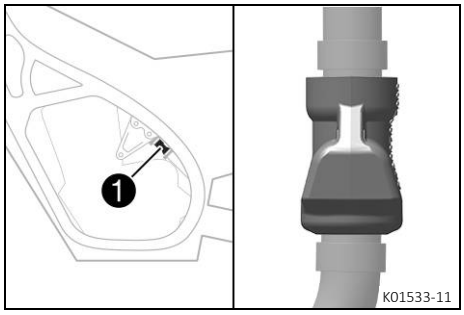

– Mount fuel line protection cap ❶.

18.2 Checking the gear oil level

Note
The gear oil level must be checked when the engine is cold.

Condition: The engine is cold

Preparatory work
– Stand the motorcycle upright on a level surface.

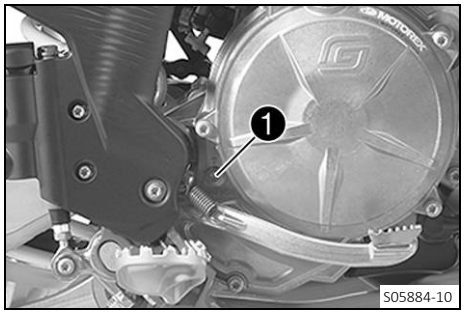

Main work

– Remove gear oil level monitoring screw 1.
– Check the gear oil level.

A small amount of gear oil should run out of the bore.

» If no gear oil runs out:
  – Add gear oil. (p. 119)

– Mount and tighten the gear oil level check screw.

Screw, gear oil level check	
M6	8 Nm (5.9 ft·lb$_f$)

18.3 Changing the gear oil

WARNING

Danger of scalding Engine and gear oil heat up when the motorcycle is operated.

– Wear suitable protective clothing and safety gloves.
– In the event of scalding, rinse the area affected immediately with lukewarm water.

NOTE

Environmental hazard Hazardous substances cause environmental damage.

– Dispose of oils, grease, filters, fuel, cleaning agents, brake fluid, etc. correctly and in accordance with the applicable regulations.

Note

Drain the gear oil while the engine is at operating temperature.

Condition: Engine is at operating temperature

Preparatory work

– Park the motorcycle on a level surface.
– Position an appropriate container under the engine.

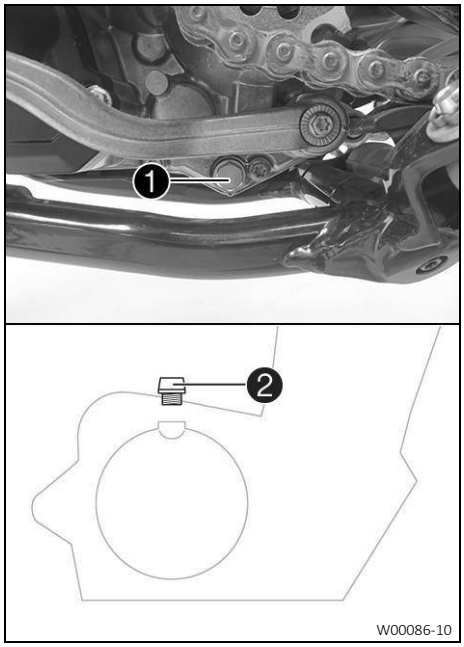

Main work

- Remove gear oil drain plug ❶ with magnet.
- Remove filler plug ❷ with the O-ring.
- Let the gear oil drain fully.
- Thoroughly clean the gear oil drain plug with a magnet.
- Clean the sealing area on the engine.
- Mount and tighten gear oil drain plug ❶ with the magnet and a new seal ring.

Transmission drain plug with magnet	
M12×1.5	20 Nm (14.8 ft·lb_f)

- Add gear oil.

gear oil	
Engine oil (15W/50) (p. 142) Partially synthetic	0.8 l (0.21 liq. gal_{US})

- Mount and tighten oil plug ❷ with O-ring.

DANGER

Danger of poisoning Exhaust gases are toxic and inhaling them may result in unconsciousness and death.

- Always ensure that there is sufficient ventilation when running the engine.
- Use suitable exhaust extraction when starting or running the engine in an enclosed space.

- Start the engine and check it for leaks.

Reworking

- Check the gear oil level. (p. 117)

18.4 Adding gear oil

Note

Too little gear oil or poor-quality oil results in premature wear to the transmission.
Gear oil must only be topped up when the engine is cold.

Condition: The engine is cold

Preparatory work

- Park the motorcycle on a level surface.

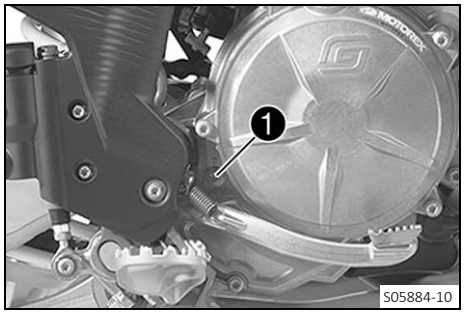

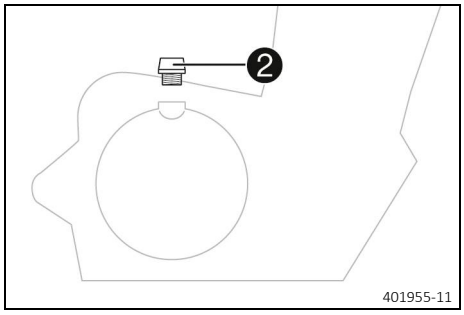

Main work

– Remove gear oil level monitoring screw ❶.

– Remove filler plug ❷ with the O-ring.
– Add gear oil until it emerges from the bore of the gear oil level check screw.

Engine oil (15W/50) (p. 142) Partially synthetic

– Mount and tighten the gear oil level check screw.

Screw, gear oil level check	
M6	8 Nm (5.9 ft·lb_f)

– Mount and tighten oil plug ❷ with O-ring.

Reworking

DANGER
Danger of poisoning Exhaust gases are toxic and inhaling them may result in unconsciousness and death.
– Always ensure that there is sufficient ventilation when running the engine.
– Use suitable exhaust extraction when starting or running the engine in an enclosed space.

– Start the engine and check it for leaks.

19.1 Cleaning the motorcycle

NOTE

Material damage Components can be damaged or destroyed if a high-pressure cleaner is used incorrectly.

The high pressure forces water into the electrical components, socket connectors, clutch cables, and bearings, etc. Too high a pressure can cause malfunctions and destroy components.

– Do not direct the water jet directly on to electrical components, socket connectors, clutch cables, or bearings.
– Maintain a minimum distance between the nozzle of the high-pressure cleaner and the component.

Minimum distance	60 cm (23.6 in)

NOTE

Environmental hazard Hazardous substances cause environmental damage.

– Dispose of oils, grease, filters, fuel, cleaning agents, brake fluid, etc. correctly and in accordance with the applicable regulations.

Note

Clean the motorcycle regularly to maintain its value and appearance over a long period.

Avoid direct sunshine when cleaning the motorcycle.

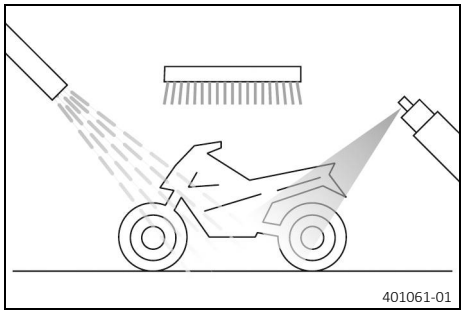

– Seal the exhaust system to prevent water from entering into it.
– Remove the coarse dirt particles with a gentle water jet.
– Spray the heavily soiled parts with a standard commercial motorcycle cleaner and clean using a brush.

Never apply motorcycle cleaner to a dry vehicle; always rinse the vehicle with water first.

Environmentally neutral universal cleaning agent (p. 146)

Note

Use warm water containing standard motorcycle cleaner and a soft sponge.

– After rinsing the motorcycle with a gentle spray of water, allow it to dry thoroughly.
– Remove the cover from the exhaust system.

WARNING

Danger of accidents Moisture and dirt impair the brake system.

– Brake carefully several times to dry out and remove dirt from the brake pads and the brake discs.

– After cleaning, ride the vehicle a short distance until the engine warms up.

Note

The heat produced causes water to evaporate at inaccessible locations in the engine and on the brake system.

– After the motorcycle has cooled off, lubricate all moving parts and pivot points.
– Clean the chain. (p. 68)

WARNING

Danger of accidents Oil, grease or wax on the brake discs reduces the brake action.

– Always keep the brake discs free of oil, fat and wax.
– Clean the brake discs with brake cleaner when necessary.

– Treat bare metal (except for brake discs and the exhaust system) with an anticorrosive.

Preserving materials (p. 146)

– Treat all plastic parts and powder-coated parts with a mild cleaning and care product.

Cleaning agents for plastics, glass, lacquers, metals, windshields and visors (p. 146)

20.1 Storage

WARNING

Danger of poisoning Fuel is harmful to health.

- Do not allow fuel to come into contact with skin, eyes, or clothing.
- Consult a doctor immediately if fuel has been ingested.
- Do not inhale fuel vapors.
- Rinse the affected area immediately with plenty of water in the event of contact with skin.
- Rinse eyes thoroughly with water and consult a doctor immediately if fuel comes into contact with eyes.
- If fuel spills on to your clothing, change the clothing.
- Store fuel properly in a suitable container and keep out of the reach of children.

Note

If the vehicle will not be ridden for an extended period, additional steps are recommended.

Before storing the motorcycle, check all parts for function and wear. If service, repairs, or replacements are necessary, you should do this during the storage period (workshops less busy). In this way, you can avoid long workshop waiting times at the start of the new season.

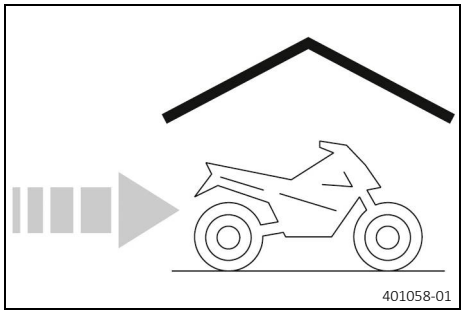

- When refueling for the last time before taking the motorcycle out of service, add fuel additive.

Fuel additive (p. 144)

- Refuel. (p. 30)

Tip

Fill the fuel tank completely as specified, using fuel with the lowest possible ethanol content.

- Clean the motorcycle. (p. 121)
- Change the gear oil. (p. 118)
- Check the frost protection and coolant level. (p. 106)
- Check the tire pressure. (p. 94)
- Remove the 12 V battery. (p. 96)
- Charge the 12 V battery. (p. 98)

Ideal charging and storage temperature of the lithium-ion battery	10 °C … 20 °C (50.0 °F … 68.0 °F)

- Store the vehicle in a dry location that is not subject to large fluctuations in temperature.

Note

GASGAS recommends putting the motorcycle on a stand or lift.

- Raise the motorcycle with a lift stand. (p. 44)

Cover the vehicle with a tarpaulin or similar cover that is permeable to air.
Do not use non-porous materials because they prevent humidity from escaping and thus cause corrosion.

20.2 Preparing for use after storage

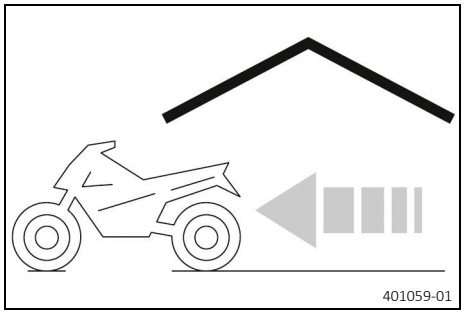

- Remove the motorcycle from the lift stand. (p. 44)
- Install the 12 V battery. (p. 97)
- Perform checks and maintenance measures when preparing for use. (p. 26)
- Take a test ride.

21.1 Troubleshooting

Cause	Finding	Remedy
The engine does not turn over when the start button is actuated	Operating error 12 V battery discharged Main fuse blown Starter relay defective Starter motor defective	– Carry out the starting procedure. (p. 26) – Charge the 12 V battery. (p. 98) – Check the charging voltage. – Check the open-circuit current. – Check the alternator. – Change the main fuse. (p. 101) – Check the starter relay.
The engine turns but does not start	Operating error Quick-lock coupling not joined Idle speed is not set correctly Fuel supply interrupted Fuel screen in the quick-lock coupling is clogged Spark plug sooty or wet Plug gap of spark plug too wide Fault in ignition system Short-circuit cable in wiring harness frayed, kill switch faulty Connector or ignition coil loose or oxidized Malfunction in the electronic fuel injection	– Carry out the starting procedure. (p. 26) – Join quick-lock couplings. – Adjust the idle speed. (p. 113) – Check the fuel tank vent. – Change the fuel screen. (p. 116) – Clean and dry the spark plug and spark plug connector, or change if necessary. – Adjust plug gap. Plug gap of spark plug: 0.60 mm (0.0236 in) – Check the ignition system. – Check the kill switch. – Clean the connector and treat with contact spray. – Read out the fault memory using the diagnostics tool.
Engine does not speed up	Malfunction in the electronic fuel injection	– Read out the fault memory using the diagnostics tool.
Engine has too little power	Air filter is very dirty Fuel filter is very dirty Fuel screen is very dirty Malfunction in the electronic fuel injection Fuel supply interrupted Exhaust system leaks, deformed or too little damping material in the silencer Damaged membrane or reed valve housing	– Clean the air filter and air filter box. (p. 61) – Change the fuel filter. – Change the fuel screen. (p. 116) – Read out the fault memory using the diagnostics tool. – Check the fuel tank vent. – Check exhaust system for damage. – Change the damping material on the main silencer. (p. 63) – Check the membrane and reed valve housing.
The engine dies during the trip	Lack of fuel The engine takes in false air Connector or ignition coil loose or oxidized	– Refuel. (p. 30) – Check that the intake manifold is firmly seated. – Clean the connector and treat with contact spray.

Cause	Finding	Remedy
Engine overheats	Too little coolant in cooling system Too little air stream Radiator fins very dirty Foam formation in the cooling system Damaged cylinder head or cylinder head gasket Bent radiator hose Thermostat defective	– Check the transmission and cooling system for leaks. – Check the coolant level. (p. 107) – Switch off the engine when standing. – Clean the radiator fins. – Drain the coolant. (p. 108) – Refill the coolant. (p. 108) – Check the cylinder head and cylinder head gasket. – Change the radiator hose. – Check the thermostat. Opening temperature: 70 °C (158.0 °F)
Malfunction indicator lamp lights up or flashes	Malfunction in the electronic fuel injection	– Check the wiring for damage and the electrical plug-in connections for corrosion and damage. – Read out the fault memory using the diagnostics tool.
White smoke development (steam in the exhaust gas)	Damaged cylinder head or cylinder head gasket	– Check the cylinder head and cylinder head gasket.
Gear oil emerges from the vent hose	Too much gear oil added	– Check the gear oil level. (p. 117)
Water in the gear oil	Damaged radial shaft seal ring or water pump	– Check the radial shaft seal ring and the water pump.

22.1 Flash code

Blink code for malfunction indicator light	Fi Malfunction indicator light lights up
Error level condition	Tilt sensor – input signal too low Signal voltage: ≤ 0.2 V Signal voltage: 3.7 V … 4.6 V Tilt sensor – input signal too high Voltage: ≥ 4.8 V

Blink code for malfunction indicator light	Fi 02: Malfunction indicator light flashes 2x short
Error level condition	Crankshaft speed sensor – synchronization faulty Time: ≥ 1 s Crankshaft position sensor - too many impulses Time: ≥ 0.1 s

Blink code for malfunction indicator light	Fi 06: Malfunction indicator light flashes 6x short
Error level condition	Throttle valve position sensor circuit A – input signal too low Voltage: ≤ 0.2 V Time: ≥ 0.08 s Throttle valve position sensor circuit A – input signal too high Voltage: ≥ 4.7 V Time: ≥ 0.08 s

Blink code for malfunction indicator light	Fi 09: Malfunction indicator light flashes 9x short
Error level condition	Crankcase pressure sensor - short circuit to ground Voltage: ≤ 0.4 V Time: ≥ 0.1 s Crankcase pressure sensor - open/short circuit to plus Voltage: ≥ 4.6 V Time: ≥ 0.1 s Ambient air pressure sensor - short circuit to ground Ambient air pressure sensor voltage: ≤ 0.4 V Time: ≥ 1 s Ambient air pressure sensor - short circuit to plus Ambient air pressure sensor voltage: ≥ 4.6 V Time: ≥ 0.1 s

Blink code for malfunction indicator light	Fi 12: Malfunction indicator light flashes 1x long, 2x short
Error level condition	Coolant temperature sensor – input signal too low Voltage: ≤ 0.1 V Time: ≥ 3 s

	Coolant temperature sensor – input signal too high Voltage: ≥ 4.8 V Time: ≥ 3 s

Blink code for malfunction indicator light	Fi 13: Malfunction indicator light flashes 1x long, 3x short
Error level condition	Intake air temperature sensor – input signal too low Voltage: ≤ 0.2 V Time: ≥ 3 s Intake air temperature sensor – input signal too high Voltage: ≥ 4.8 V Time: ≥ 3 s

Blink code for malfunction indicator light	Fi 14: Malfunction indicator light flashes 1x long, 4x short
Error level condition	Crankcase pressure sensor – difference too high between sensor and engine control unit

Blink code for malfunction indicator light	Fi 21: Malfunction indicator light flashes 2x long, 1x short
Error level condition	Battery voltage - input voltage too low Engine control unit power supply: ≤ 9.9 V Time: ≥ 1 s Battery voltage – input voltage too high Engine control unit power supply: ≥ 16.10 V Time: ≥ 1 s

Blink code for malfunction indicator light	Fi 33: Malfunction indicator lamp flashes 3x long, 3x short
Error level condition	Injection valve 1, cylinder 1 – input signal too low Time: ≥ 1 s Injection valve 1, cylinder 1 – input signal too high Time: ≥ 1 s

Blink code for malfunction indicator light	Fi 34: Malfunction indicator lamp flashes 3x long, 4x short
Error level condition	Injection valve 2, cylinder 1 – input signal too low Time: ≥ 1 s Injection valve 2, cylinder 1 – input signal too high Time: ≥ 1 s

Blink code for malfunction indicator light	Fi 37: Malfunction indicator light flashes 3x long, 7x short
Error level condition	Ignition coil – circuit fault Time: ≥ 2.0 s

Blink code for malfunction indicator light	Fi 41: Malfunction indicator light flashes 4x long, 1x short
Error level condition	Fuel pump - short circuit to ground/open circuit The engine is switched off: ≥ 0.4 s Fuel pump – short circuit to plus The engine is switched off: ≥ 0.4 s

Blink code for malfunction indicator light	Fi 50: Malfunction indicator light flashes 5x long
Error level condition	Exhaust control actuator – no signal Exhaust control actuator – temperature too high Exhaust control actuator – incorrect setting Exhaust control actuator – setpoint value signal faulty Exhaust control actuator – input signal too low Exhaust control actuator – input signal too high Exhaust control actuator – mechanical error in the lower position Exhaust control actuator – mechanical error in the upper position Exhaust control actuator – mechanical error

Blink code for malfunction indicator light	Fi 53: Malfunction indicator light flashes 5x long, 3x short
Error level condition	Sensor voltage 1 – open circuit/short circuit to ground Sensor voltage 1 – short circuit to plus

Blink code for malfunction indicator light	Fi 54: Malfunction indicator light flashes 5x long, 4x short
Error level condition	Sensor voltage 2 – open circuit/short circuit to ground Sensor voltage 2 – short circuit to plus

23.1 Engine

23.1.1 Technical data - engine

Design	Single-cylinder 2-stroke engine, liquid-cooled, with diaphragm intake and exhaust control
Displacement	293.15 cm³ (17.8891 in³)
Stroke	72 mm (2.83 in)
Bore	72 mm (2.83 in)
idle speed	1,500 rpm … 1,700 rpm (25.00 Hz … 28.33 Hz)
Crankshaft bearing	1 grooved ball bearing, 1 roller bearing
Big (bottom) end bearing	Needle bearing
Wrist pin bearing	Needle bearing
Piston	Cast aluminum
Piston rings	2 rectangular rings
X-dimension (upper edge of piston to special tool)	0 mm … 0.10 mm (0 in … 0.0039 in)
Z dimension (height of control flap)	47.7 mm … 48.0 mm (1.878 in … 1.890 in)
Primary transmission	26:72
Clutch	Multi-disc wet clutch / hydraulically activated
Transmission	6 speed transmission, claw shift
Gear ratios	
1st gear	13:33
2nd Gear	16:30
3rd Gear	18:26
4th Gear	22:26
5th Gear	23:23
6th Gear	26:22
Ignition system	Electronic ignition
Spark plug	NGK BR 8 ES
Plug gap of spark plug	0.60 mm (0.0236 in)
Starting aid	Electric starter

23.1.2 Capacities - engine

gear oil	
Engine oil (15W/50) (p. 142) Partially synthetic	0.8 l (0.21 liq. gal_{US})
coolant	
Coolant (p. 143) Antifreeze protection to at least: −25 °C (−13.0 °F)	0.95 l (0.251 liq. gal_{US})

23.2 Chassis

23.2.1 Technical data - chassis

Frame	Central tube frame made of chrome molybdenum steel tubing
Suspension travel:	
front	300 mm (11.81 in)
rear	300 mm (11.81 in)
Triple clamp offset	22 mm (0.87 in)
Brake system	Disc brakes, floating brake calipers
Brake discs - diameter	
front	260 mm (10.24 in)
rear	220 mm (8.66 in)
Brake disc wear limit	
front	2.5 mm (0.098 in)
rear	3.5 mm (0.138 in)
Final drive	14:48
Chain	5/8 x 1/4"
Rear sprockets available	• 48 teeth
Steering head angle	63.9° (1.115 rad)
Wheelbase	1,489 ±10 mm (58.62 ±0.39 in)
Seat Height unloaded	957 mm (37.68 in)
Ground clearance unloaded	355 mm (13.98 in)
Weight without fuel approx.	102.5 kg (225.97 lb)
Maximum permissible front axle load	145 kg (319.7 lb)
Maximum permissible rear axle load	190 kg (418.9 lb)
Maximum permissible total weight	335 kg (738.5 lb)
Off-road tire pressure	
front	1.0 bar (14.5 psi)
rear	1.0 bar (14.5 psi)

23.2.2 Technical data - tires

Tire front	Rear tire
80/100 - 21 51M TT Dunlop MX33F	**110/100 - 18 64M TT** Dunlop AT82
The tires specified represent one of the possible series production tires. For alternative manufacturers, if any, contact an authorized manufacturer or qualified tire dealership. If local road approval regulations apply, these and the respective technical specifications must be observed.	

23.2.3 Capacities - vehicle

Total fuel tank capacity, approx.	
Super unleaded (95 octane) mixed with 2-stroke engine oil (p. 144) Mixture ratio: 1:60	9 l (2.4 liq. gal_{US})

23.3 Electrics

23.3.1 Battery

12-V battery	HJTZ5S-FP-C	Lithium-ion battery Battery voltage: 12 V Nominal capacity: 2.0 Ah Maintenance-free

23.3.2 Fuses

Fuse	58011109105	5 A
Fuse	58011109110	10 A

23.3.3 Lamps

Dashboard illumination and indicator lights	LED

23.4 Fork

23.4.1 Technical data - fork

Fork part number	A590C173Y402000

Fork	**WP XPLOR CC**
Compression damping	
Comfort	17 clicks
Standard	12 clicks
Sport	7 clicks
Rebound damping	
Comfort	23 clicks
Standard	18 clicks
Sport	13 clicks
Spring length with preload spacer(s)	478 mm (18.82 in)

Spring rate	
Rider's weight: 65 kg … 75 kg (143.3 lb … 165.3 lb)	4.4 N/mm (25.12 lb_f/in)
Rider's weight: 75 kg … 85 kg (165.3 lb … 187.4 lb)	4.6 N/mm (26.27 lb_f/in)
Rider's weight: 85 kg … 95 kg (187.4 lb … 209.4 lb)	4.8 N/mm (27.41 lb_f/in)
Fork length	940 mm (37.01 in)

23.4.2 Capacities - fork

Oil capacity, outer assembly	
Fork oil (48601166S1) (SAE 4) (p. 142)	390 ml (13.19 fl. oz_{US})
Oil capacity, cartridge	
Fork oil (48601166S1) (SAE 4) (p. 142)	175 ml (5.92 fl. oz_{US})

23.5 Shock absorber

23.5.1 Technical data - shock absorber

Shock absorber part number	A460C473Y408000

Shock absorber	**WP XACT LDS**
Low-speed compression damping	
Comfort	17 clicks
Standard	15 clicks
Sport	13 clicks
High-speed compression damping	
Comfort	2 turns (720°)
Standard	1.5 turns (540°)
Sport	1 turn (360°)
Rebound damping	
Comfort	17 clicks
Standard	15 clicks
Sport	13 clicks
Preload	8 mm (0.31 in)
Spring rate	
Weight of rider: 65 kg … 75 kg (143.3 lb … 165.3 lb)	42 N/mm (239.8 lb_f/in)
Weight of rider: 75 kg … 85 kg (165.3 lb … 187.4 lb)	45 N/mm (257.0 lb_f/in)

Weight of rider: 85 kg … 95 kg (187.4 lb … 209.4 lb)	48 N/mm (274.1 lb_f/in)
Spring length	240 mm (9.45 in)
Gas assisted	10 bar (145 psi)
Static sag	35 mm (1.38 in)
Rider sag	105 mm (4.13 in)
Installation position	456.3 mm (17.965 in)

23.5.2 Capacities - shock absorber

Oil capacity, shock absorber	
Shock absorber oil (50180751S1) (SAE 2.5) (p. 143)	Fill to the maximum mark

23.6 Tightening torque

23.6.1 Engine tightening torques

Detent arm screw M5	6 Nm (4.4 ft·lb_f) **Loctite® 243**
Actuator screw M5	5 Nm (3.7 ft·lb_f) **Loctite® 243**
Actuator cover screw M5	5 Nm (3.7 ft·lb_f) **Loctite® 243**
Exhaust control flap screw M5	8 Nm (5.9 ft·lb_f) **Loctite® 243**
Screw, bearing retaining bracket M5	6 Nm (4.4 ft·lb_f) **Loctite® 243**
Screw, retaining bracket of exhaust control M5	6 Nm (4.4 ft·lb_f) **Loctite® 2701**
Control unit cover screw M5	6 Nm (4.4 ft·lb_f)
Screw, clutch spring retainer M5	6 Nm (4.4 ft·lb_f)
Screw, crankshaft position sensor M5	6 Nm (4.4 ft·lb_f) **Loctite® 243**
Main shaft exhaust control screw M5	8 Nm (5.9 ft·lb_f) **Loctite® 243**

Nut, axle for control flap M5	5 Nm (3.7 ft·lb_f)
Stator screw M5	6 Nm (4.4 ft·lb_f) **Loctite® 243**
Screw, intake manifold / diaphragm housing M6	6 Nm (4.4 ft·lb_f)
Screw, gear oil level check M6	8 Nm (5.9 ft·lb_f)
Shift star screw M6	10 Nm (7.4 ft·lb_f) **Loctite® 243**
Screw, shift lever M6	14 Nm (10.3 ft·lb_f) **Loctite® 243**
Screw, water pump cover M6	10 Nm (7.4 ft·lb_f)
Screw, ignition cover M6	8 Nm (5.9 ft·lb_f)
Nut, water pump impeller M6	5 Nm (3.7 ft·lb_f) **Loctite® 243**
Screw, outer clutch cover M6	8 Nm (5.9 ft·lb_f)
Screw, inner clutch cover M6	10 Nm (7.4 ft·lb_f)
Screw, starter motor M6	10 Nm (7.4 ft·lb_f)
Screw, starter motor cover M6	8 Nm (5.9 ft·lb_f)
Screw, engine case M6	10 Nm (7.4 ft·lb_f)
Screw, intermediate flange M6	10 Nm (7.4 ft·lb_f)
Cylinder head bleed screw M6	8 Nm (5.9 ft·lb_f)
Screw, balancer shaft M8	30 Nm (22.1 ft·lb_f) **Loctite® 243**
Screw, cylinder head M8	27 Nm (19.9 ft·lb_f)
Nut, cylinder base M10	35 Nm (25.8 ft·lb_f)
Screw, drive chain front sprocket M10	60 Nm (44.3 ft·lb_f) **Loctite® 2701**
Stud, cylinder base M10	12 Nm (8.9 ft·lb_f)

Nut, crankshaft M12LH×1	60 Nm (44.3 ft·lb_f)
Transmission drain plug with magnet M12×1.5	20 Nm (14.8 ft·lb_f)
Spark plug M14×1.25	25 Nm (18.4 ft·lb_f)
Nut, inner clutch hub M18×1.5	100 Nm (73.8 ft·lb_f) **Loctite® 243**
Nut, primary gear M18LH×1.5	150 Nm (110.6 ft·lb_f) **Loctite® 243**
Screw, reed valve support plate **EJOT DELTA PT®** – 30×12	1 Nm (0.7 ft·lb_f)
Screw, outer membrane sheets **EJOT DELTA PT®** – 30×6	1 Nm (0.7 ft·lb_f)
Screw, inner membrane sheets **EJOT DELTA PT®** – 35×25	1 Nm (0.7 ft·lb_f)
Screw, pressure sensor **EJOT PT®** – K60×20 – AL	2.5 Nm (1.84 ft·lb_f)

23.6.2 Chassis tightening torques

Screw, hose clamp, throttle body	2.8 Nm (2.07 ft·lb_f)
Radiator hose clamp	2.4 Nm (1.77 ft·lb_f)
Air boot screw connection to throttle body M4	5 Nm (3.7 ft·lb_f)
Screw, fixed grip M4×12	5 Nm (3.7 ft·lb_f) **Loctite® 243**
Screw, frame protector M5×10	3 Nm (2.2 ft·lb_f)
Screw, throttle body cover M5×8	2.6 Nm (1.92 ft·lb_f)
Screw, shock absorber adjusting ring M5×20	5 Nm (3.7 ft·lb_f)
Screw, battery terminal M5	2.5 Nm (1.84 ft·lb_f)
Remaining nuts on chassis M5	5 Nm (3.7 ft·lb_f)
Remaining screws on chassis M5	5 Nm (3.7 ft·lb_f)
Screws on muffler M5	7 Nm (5.2 ft·lb_f)
Screw, fender on triple clamp M6×16	12 Nm (8.9 ft·lb_f)
Nut, starter cable on starter motor M6	4 Nm (3.0 ft·lb_f)

Nut, throttle cable on throttle body M6	3 Nm (2.2 ft·lb_f)
Brake line guide screw on swingarm M6×16	4.5 Nm (3.32 ft·lb_f) **Loctite® 243**
Screw, front brake disc M6×13	14 Nm (10.3 ft·lb_f) **Loctite® 243**
Screw, rear brake disc M6×13	14 Nm (10.3 ft·lb_f) **Loctite® 243**
Screw, starter motor cable connection M6	4 Nm (3.0 ft·lb_f)
Screw, chain guide on swingarm, rear M6×16	10 Nm (7.4 ft·lb_f) **Loctite® 243**
Screw, chain guide on swingarm, front M6×45	10 Nm (7.4 ft·lb_f)
Screw, ground wire on frame M6×13	10 Nm (7.4 ft·lb_f)
Screw, seat installation M6	8 Nm (5.9 ft·lb_f)
Screw, connector support incl. dashboard M6×15	5 Nm (3.7 ft·lb_f)
Screw, throttle twist grip M6×20	5 Nm (3.7 ft·lb_f)
Screw, clutch lever M6	5 Nm (3.7 ft·lb_f)
Screw, ball joint of push rod on brake cylinder M6×20	10 Nm (7.4 ft·lb_f) **Loctite® 243**
Screw, chain slider guard M6×16	6 Nm (4.4 ft·lb_f) **Loctite® 243**
Screw, fuel tank spoiler on radiator M6×12	6 Nm (4.4 ft·lb_f)
Remaining nuts on chassis M6	10 Nm (7.4 ft·lb_f)
Remaining screws on chassis M6	10 Nm (7.4 ft·lb_f)
Screw, starter cable to starter relay M6	6 Nm (4.4 ft·lb_f)
Screw, brake lever M6	5 Nm (3.7 ft·lb_f)
Brake pedal stop nut M8	20 Nm (14.8 ft·lb_f)
Screw, manifold on engine brace M8×30	15 Nm (11.1 ft·lb_f)

Screw, subframe, bottom M8×15	35 Nm (25.8 ft·lb_f) **Loctite® 243**
Screw, top triple clamp M8×40	20 Nm (14.8 ft·lb_f)
Screw, upper steering stem M8×25	20 Nm (14.8 ft·lb_f) **Loctite® 243**
Screw, bottom triple clamp M8×50	15 Nm (11.1 ft·lb_f)
Screw, fork shoe M8×25	15 Nm (11.1 ft·lb_f)
Screw, handlebar clamp M8×25	20 Nm (14.8 ft·lb_f)
Screw, subframe, top M8×30	40 Nm (29.5 ft·lb_f) **Loctite® 2701**
Screw, side stand M8×26	33 Nm (24.3 ft·lb_f) **Loctite® 2701**
Screw, chain slider M8×20	15 Nm (11.1 ft·lb_f)
Screw of chain pinion cover on frame M8×25	15 Nm (11.1 ft·lb_f)
Screw, front brake caliper M8×30	25 Nm (18.4 ft·lb_f) **Loctite® 243**
Nut, rear sprocket screw M8×26	35 Nm (25.8 ft·lb_f) **Loctite® 2701**
Nut, rim lock M8	12 Nm (8.9 ft·lb_f)
Remaining nuts on chassis M8	25 Nm (18.4 ft·lb_f)
Remaining screws on chassis M8	25 Nm (18.4 ft·lb_f)
Brake pedal stop nut M8	20 Nm (14.8 ft·lb_f)
Bushing, foot brake lever M10	45 Nm (33.2 ft·lb_f)
Engine mounting bolt M10×123	60 Nm (44.3 ft·lb_f)
Screw, handlebar mount M10×50	40 Nm (29.5 ft·lb_f) **Loctite® 243**
Screw, shock absorber M10×52	60 Nm (44.3 ft·lb_f) **Loctite® 2701**

Remaining nuts on chassis M10	45 Nm (33.2 ft·lb_f)
Remaining screws on chassis M10	45 Nm (33.2 ft·lb_f)
Coolant temperature sensor M10×1.25	10 Nm (7.4 ft·lb_f)
Nut, front sprocket M10×18	60 Nm (44.3 ft·lb_f) **Loctite® 2701**
Top shock absorber screw M10	60 Nm (44.3 ft·lb_f) **Loctite® 2701**
Nut, frame on pull rod M14×1.5	60 Nm (44.3 ft·lb_f)
Nut, pull rod on triangular lever M14×1.5	60 Nm (44.3 ft·lb_f)
Nut, triangular lever on swingarm M14×1.5	60 Nm (44.3 ft·lb_f)
Nut, swingarm pivot M16×1.5	100 Nm (73.8 ft·lb_f)
Screw, top steering head M20×1.5	12 Nm (8.9 ft·lb_f)
Screw, wheel spindle, front M20×1.5	35 Nm (25.8 ft·lb_f)
Nut, wheel spindle, rear M22×1.5	80 Nm (59.0 ft·lb_f)
Screw-in nozzle, cooling system M24×1.5	7.5 Nm (5.53 ft·lb_f)
Spoke nipple, front wheel M4,5	6 Nm (4.4 ft·lb_f)
Spoke nipple, rear wheel M4,5	6 Nm (4.4 ft·lb_f)
Screw, start button/kill switch **EJOT PT®** – K50×18	2 Nm (1.5 ft·lb_f)
Screw, intake air temperature sensor **EJOT PT®** – K50×18	0.7 Nm (0.52 ft·lb_f)
Screw, fuel pump on fuel tank **EJOT PT®** – K60×30	2.5 Nm (1.84 ft·lb_f)
Screw, air filter box, on subframe **EJOT PT®** – K60×20	5 Nm (3.7 ft·lb_f)
Screw, start button/kill switch **EJOT PT®** – K60×25	2 Nm (1.5 ft·lb_f)
Remaining screws on chassis **EJOT PT®** – K60×25 – Z	2 Nm (1.5 ft·lb_f)
Remaining screws on chassis **EJOT PT®** – K60×25	2 Nm (1.5 ft·lb_f)
Screw, air filter box cover **EJOT PT®** – MK60×20 – Z	3 Nm (2.2 ft·lb_f)

24.1 Recycling

I02045-10

Further information is available at the following website.
Recycling information website: https://www.quefairedemesdechets.fr

A Technical terms

OBD	On-board diagnosis	Vehicle system, which monitors the specified parameters of the vehicle electronics

B Operating material

Off-road chain spray

Recommended supplier

MOTOREX®

- **CHAINLUBE OFF ROAD**

Fork oil

Order details

- 48601166S1

Standards

- SAE 4 → SAE

Universal oil spray

Recommended supplier

MOTOREX®

- **JOKER 440 SYNTHETIC**

Long-life grease

Recommended supplier

MOTOREX®

- **Bike Grease 2000**

Engine oil

Recommended supplier

MOTOREX®

- **TOP SPEED 4T**

Standards

→ JASO T903 MA2

- 15W/50 → SAE

Properties

- Partially synthetic

High viscosity grease

Recommended supplier

SKF®

- **LGHB 2**

Silicone spray

Recommended supplier	
MOTOREX®	
• **SILICONE SPRAY**	

Shock absorber oil

Order details	
• 50180751S1	
Standards	
• SAE 2.5	→ SAE

Oil for foam air filter

Recommended supplier
MOTOREX®
• **RACING BIO AIR FILTER OIL**

Brake fluid DOT 5.1

Recommended supplier
MOTOREX®
• **BRAKE FLUID DOT 5.1**
Standards
→ DOT

Coolant

Recommended supplier	
MOTOREX®	
• **COOLANT M3.0**	
Properties	
• Antifreeze protection to at least	−25 °C (−13.0 °F)

C Fuels

Super unleaded (95 octane) mixed with 2-stroke engine oil

Standards	
→ DIN EN 228 → JASO FD	
Properties	
• Mixture ratio	1:60
Mixture ratio	
• Super unleaded • 2-stroke engine oil	10 l (2.6 liq. gal_{US}) 167 ml (5.65 fl. oz_{US})

Fuel additive

Recommended supplier
MOTOREX® • **FUEL STABILIZER**

D Electrics

12-V battery (HJTZ5S-FP-C)

Product code	
• HJTZ5S-FP-C	
Properties	
• Lithium-ion battery	
• Battery voltage	12 V
• Nominal capacity	2.0 Ah
• Maintenance-free	

Dashboard illumination and indicator lights (LED)

Product code
• LED

Fuse (58011109110)

Product code
• 58011109110
Properties
• 10 A

Fuse (58011109105)

Product code
• 58011109105
Properties
• 5 A

E Cleaning agents

Chain cleaner

Recommended supplier

MOTOREX®

- **CHAIN CLEAN**

Preserving materials

Recommended supplier

MOTOREX®

- **MOTO PROTECT**

Air filter cleaning agent

Recommended supplier

MOTOREX®

- **RACING BIO AIR FILTER CLEANER**

Cleaning agents for plastics, glass, lacquers, metals, windshields and visors

Recommended supplier

MOTOREX®

- **QUICK CLEANER**

Environmentally neutral universal cleaning agent

Recommended supplier

MOTOREX®

- **MOTO CLEAN UNIVERSAL**

F Icons

F.1 Symbol colors

F.1.1 Yellow and orange symbols

Yellow and orange symbols indicate a malfunction status that requires prompt intervention. Active driving aids are also represented by yellow or orange symbols.

Fi	Failure indicator lamp lights up or flashes red

1

12 V battery
charging . . . 98

12 V battery
installation . . . 97
removing . . . 96

A

Air filter
cleaning . . . 61
installing . . . 61
removing . . . 60

Air filter box
cleaning . . . 61

Air filter box cover
installation . . . 59
preparing for securing . . . 62
removing . . . 59

Auxiliary substances . . . 11

B

Brake discs
checking . . . 78

Brake fluid
adding front brake . . . 80
adding to rear brake . . . 85

Brake fluid level
checking on front brake . . . 79
checking on rear brake . . . 85

Brake lining retainers
checking on front brake . . . 81
checking on rear brake . . . 86

Brake pad
checking on front brake . . . 81

Brake pads
changing on the rear brake . . . 87
checking on rear brake . . . 86
of the front brake, changing . . . 81

Brake pedal
adjusting the basic position . . . 84
checking the free travel . . . 84

C

Chain
checking . . . 70
cleaning . . . 68

Chain guide
checking . . . 70

Chain tension
adjusting . . . 69
checking . . . 68

Checking basic chassis setting with
rider's weight . . . 34

Clutch
changing fluid . . . 76
checking/correcting fluid level . . . 75

Clutch lever
adjusting the basic position . . . 75

Compression damping
adjusting the fork . . . 40

Coolant
changing . . . 110
draining . . . 108
refilling . . . 108

Coolant level
checking . . . 106...107

Customer service . . . 11

D

Defined use . . . 10

Difficult operating conditions . . . 23
dry sand . . . 23
high temperature . . . 25
low temperature . . . 25
muddy surfaces . . . 25
slow speed . . . 25
snow . . . 25
wet sand . . . 24
wet surfaces . . . 25

E

Engine
running in . . . 22

Engine number . . . 14

Environment . . . 10

Exhaust control
end positions, programming . . . 104

F

Figures . . . 11

Fork
checking basic setting . . . 40

Fork legs
bleeding . . . 44
cleaning the dust boots . . . 45
installation . . . 48
removing . . . 48

Fork protector
installation . . . 46
removing . . . 46

Frame
checking . . . 73

Frame protector
installation . . . 47
removing . . . 47

Front fender
installation 54
removing 54
Front sprocket
checking 70
Front wheel
installing 91
removing 90
Frost protection
checking 106
Fuel screen
changing 116
Fuel tank
installation 66
removing 64
Fuel tank cap
closing 18
opening 18
Fuse
changing the main fuse 101
of the fuel pump, changing 102
Fuses 132

G

GASGAS Technical Accessories 11
Gear oil
adding 119
changing 118
Gear oil level
checking 117
Gear shift lever
adjusting the basic position 114
checking the basic position 114

H

Handbrake lever
adjusting the basic position 78
checking the free travel 78
Handlebar position
adjusting 41
High-speed compression damping
adjusting the shock absorber 35

I

Idle speed
adjusting 113
Implied warranty 11
Improper use 10
Intended use 10

L

Lamps 132
Lower triple clamp
installation 50
removing 49
Low-speed compression damping
adjusting the shock absorber 34

M

Main fuse
changing 101
Manufacturer's warranty 11
Motorcycle
cleaning 121
raising with lift stand 44
removing from lift stand 44
Muffler
changing damping material 63
installation 63
removing 62

N

Number plate
removing 53

O

Owner's manual 10

P

Preparing for use
after storage 124
checks and maintenance measures when preparing for use 26
notes on preparing for first use 21
Protective clothing 9

R

Rear sprocket
checking 70
Rear wheel
installation 92
removing 91
Rebound damping
adjusting the fork 40
adjusting the shock absorber 35
Recycling 140
Refueling
fuel 30
Resources 11
Rider sag
adjusting 39
Rubber grip
checking 74

S

Safe use 8

Seat
mounting 58
removing 57

Service 11

Shock absorber
adjusting the high-speed compression damping 35
adjusting the low-speed compression damping 34
adjusting the rebound damping 35
adjusting the spring preload 38
checking static sag 37
checking the rider sag 37
installation 56
removing 55

Side panel, right
installation 47
removing 46

Spare parts 11

Spoke tension
checking 94

Start number plate
installation 54

Starting 26

Steering head bearing
lubricating 53

Steering head bearing play
adjusting 52
checking 52

Storage 123

Swingarm
checking 73

T

Tampering 8

Technical specifications
tires 132

Throttle cable play
adjusting 112
checking 112

Throttle cable routing
checking 73

Tire condition
checking 93

Tire pressure
checking 94

Transportation 29

V

Vehicle identification number 14
VIN 14

W

Work rules 9

3215289en

31/08/2026

GASGAS

Stallhofnerstraße 3 / 5230 Mattighofen / Austria / **https://www.gasgas.com/**