OWNER'S MANUAL 2026

READY TO RACE

390 ADVENTURE R

ITEM NO.: 3240325EN

Dear KTM customer,

Congratulations on your decision to purchase a KTM motorcycle. You are now the owner of a state-of-the-art sports vehicle which, with proper care, will bring you pleasure for a long time to come.

We hope you enjoy your bike and have a safe journey at all times!

You can enter the serial numbers of your vehicle below to find the serial numbers more quickly if required:

Vehicle identification number (p. 19)	Stamp of the contractual partner
Engine number (p. 19)	

The owner's manual contained the latest information for this model series at the time of publication. However, minor differences due to further developments in design cannot be ruled out completely.

All specifications are non-binding. KTM Sportmotorcycle GmbH specifically reserves the right to modify or delete technical specifications, prices, colors, forms, materials, services, designs, equipment, etc., without prior notice and without specifying reasons, to adapt these to local conditions, as well as to stop production of a particular model without prior notice. KTM accepts no liability for delivery options, differences from illustrations and descriptions, misprints, and other errors. The models portrayed partly contain special equipment that does not belong to the regular scope of supply.

© 2026 KTM Sportmotorcycle GmbH, Mattighofen Austria
All rights reserved. Figures: Visus Studios/INDG/KTM
Written permission from the copyright owner is required before any duplication or reproduction.

ISO 9001

KTM applies quality assurance processes that lead to the highest possible product quality as defined in the ISO 9001 international quality management standard.

12 100 6061

REG.NO. 12 100 6061

Issuing institution:
TÜV SÜD Management Service GmbH

KTM Sportmotorcycle GmbH
Stallhofnerstraße 3
5230 Mattighofen, Austria

This document is valid for:

390 ADVENTURE R B.D. US (F5375ZGL, F5375ZG)

3240325en

25/09/2026

Table of contents

1 Means of representation 9
1.1 Conventions 9
1.1.1 Icons 9
1.1.2 Formatting 9
1.1.3 Abbreviations 9
2 Safety 10
2.1 Safety instructions 10
2.2 Consumer rights 10
2.3 Operating noise warning 10
2.4 Manufacturer warranty for the exhaust monitoring system 10
2.5 Noise emission warranty 11
2.6 Reporting safety defects 11
2.7 Ban on tampering 11
2.8 Safe use 12
2.9 Protective clothing 12
2.10 Work rules 12
2.11 Environment 13
2.12 Owner's manual 13
2.13 Usage definition 13
2.14 Improper use 13
2.15 Safety markings on the motorcycle 14
2.15.1 Overview of labels 14
2.15.2 Label in detail 14
3 Important notes 16
3.1 Manufacturer's warranty, implied warranty 16
3.2 Auxiliary material, operating material 16
3.3 Spare parts, accessories 16
3.4 Service 16
3.5 Figures 16
3.6 Customer service 16
4 View of the vehicle 17
4.1 View of vehicle, front right (example) 17
4.2 View of vehicle, rear right (example) 18
5 Serial number 19
5.1 Vehicle identification number 19
5.2 Type approval label 19
5.3 Key number 19
5.4 Engine number 19
5.5 Fork part number 20
5.6 Shock absorber part number 20
6 Controls 21
6.1 Clutch lever 21
6.2 Handbrake lever 21
6.3 Throttle grip 21
6.4 Switches on the left side of the handlebar 21
6.4.1 Combination switch 21
6.4.2 Light switch 22
6.4.3 Hazard warning flasher switch 22
6.4.4 Cruise control system tip switch (optional) 23
6.4.5 +RES/-SET button 24
6.4.6 Menu buttons 24
6.4.7 Turn signal switch 25
6.4.8 Horn button 25
6.5 Electric starter 25
6.6 Kill switch 26
6.7 Ignition and steering lock 26
6.8 Locking the steering 26
6.9 Unlocking the steering 27
6.10 USB–C socket 27
6.11 Opening the fuel tank cap 27
6.12 Closing the fuel tank cap 28
6.13 Seat lock 29
6.14 On-board tool kit 29
6.15 Passenger strap 29
6.16 Passenger footpegs 29
6.17 Gear shift lever 30
6.18 Brake pedal 30
6.19 Side stand 30
7 Combination instrument 32
7.1 Dashboard 32
7.2 activation and testing 32
7.2.1 Activation 32
7.2.2 Test 33
7.3 warnings 33
7.4 indicator lamps 34
7.5 Display 35
7.6 Reduced display 36
7.7 speed 36
7.8 shift light 37
7.9 speed display 37
7.10 Cruise control indicator (optional) 38
7.11 time 38
7.12 **Ride–Mode** display 38
7.13 coolant temperature indicator 39
7.14 fuel level display 39
7.15 heated grip (optional) 40
7.16 **Favorites** display 40
7.17 **Quick Selector 1** display 40
7.18 **Quick Selector 2** display 40
7.19 **Navigation** display (optional) 41
7.20 **Call** display 41
7.21 **Remote Control Mode** (optional) 41

7.22 Menu 42
7.22.1 Menu 42
7.22.2 **Motorcycle** 42
7.22.3 **Bike info** 45
7.22.4 Cruise control (optional) 47
7.22.5 **Navigation (optional)** 47
7.22.6 **audio** 50
7.22.7 **Heating** (optional) 51
7.22.8 call 51
7.22.9 **Settings** 52

8 Ergonomics 63

8.1 Handlebar position 63
8.2 Adjusting the handlebar position 63
8.3 Adjusting the basic position of the hand brake lever 64
8.4 Adjusting the basic position of the clutch lever 64
8.5 Adjusting foot brake lever stub 65
8.6 Adjusting the shift lever 65

9 Preparing for use 67

9.1 Notes on preparing for first use 67
9.2 Running in the engine 68
9.3 Loading the vehicle 68
9.4 Preparing the vehicle for difficult operating conditions 69

10 Riding instructions 70

10.1 Checks and maintenance measures when preparing for use 70
10.2 Starting 70
10.3 Starting off 71
10.4 Quickshifter+ (optional) 72
10.5 Shifting, riding 72
10.6 Braking 75
10.7 Stop, park 76
10.8 Transport 77
10.9 Towing in the event of a breakdown 77
10.10 Refueling 78

11 Service schedule 80

11.1 Service work 80

12 Tuning the chassis 82

12.1 Fork/shock absorber 82
12.2 Adjusting the compression damping of the fork 82
12.3 Adjusting the rebound damping of the fork 82
12.4 Adjusting the spring preload of the shock absorber 83
12.5 Adjusting the rebound damping of the shock absorber 83

13 Service work on the chassis 85

13.1 Raising the motorcycle with rear lifting gear 85
13.2 Removing the rear of the motorcycle from the lifting gear 85
13.3 Lifting the motorcycle with the front lifting gear 85
13.4 Taking the motorcycle off the front lifting gear 86
13.5 Cleaning the dust boots of the fork legs 87
13.6 Removing the seat 88
13.7 Mounting the seat 88
13.8 Checking the chain for dirt 88
13.9 Cleaning the chain 89
13.10 Checking the chain tension 89
13.11 Adjusting the chain tension 90
13.12 Checking the chain, rear sprocket, and engine sprocket 91
13.13 Removing the right side fairing 93
13.14 Removing right fuel tank cover 93
13.15 Installing the right fuel tank cover 96
13.16 Installing the right side cover 97
13.17 Removing the skid plate 98
13.18 Installing the skid plate 98
13.19 Removing the engine guard retaining bracket 98
13.20 Installing the engine guard retaining bracket 99
13.21 Removing the front top fender 99
13.22 Installing the front top fender 99
13.23 Removing the windshield 100
13.24 Installing the windshield 100
13.25 Removing the fork protector 100
13.26 Installing the fork protector 100

14 Brake system 102

14.1 Anti-lock braking system 102
14.2 Checking the brake discs 103
14.3 Checking the brake fluid level for the front brake 104
14.4 Adding brake fluid for the front brake 104
14.5 Checking that the brake pads of the front brake are secured 105

14.6 Checking the free travel of the brake pedal ... 106
14.7 Checking the brake fluid level for the rear brake ... 106
14.8 Adding brake fluid for the rear brake ... 107
14.9 Checking that the brake pads of the rear brake are secured ... 108

15 Wheels, tires ... 110

15.1 Removing the front wheel ... 110
15.2 Installing the front wheel ... 111
15.3 Removing the rear wheel ... 112
15.4 Installing the rear wheel ... 113
15.5 Checking the rear hub damping rubber pieces ... 114
15.6 Checking the tire condition ... 115
15.7 Checking the tire pressure ... 116
15.8 Checking the spoke tension ... 117

16 Electrics ... 118

16.1 Removing the 12 V battery ... 118
16.2 Installing the 12 V battery ... 119
16.3 Charging the 12 V battery ... 119
16.4 Changing the main fuse ... 121
16.5 Changing the ABS fuses ... 122
16.6 Changing the fuses of individual electrical power consumers ... 124
16.7 Checking the headlight setting ... 126
16.8 Adjusting the headlight range ... 126
16.9 Diagnostic connector ... 127
16.10 Front ACC1 and ACC2 ... 127
16.11 Rear ACC1 and ACC2 ... 127

17 Cooling system ... 128

17.1 Cooling system ... 128
17.2 Checking the frost protection and coolant level ... 128
17.3 Checking the coolant level ... 130
17.4 Draining the coolant ... 131
17.5 Filling/bleeding the cooling system ... 131
17.6 Changing the coolant ... 133

18 Tuning the engine ... 135

18.1 **Ride Mode** ... 135
18.2 Motorcycle traction control (optional) ... 135
18.3 Checking the play in the clutch lever ... 136
18.4 Adjusting play in the clutch lever ... 136

19 Service work on the engine ... 137

19.1 Checking the engine oil level ... 137
19.2 Changing the engine oil and oil filter, cleaning the oil screens ... 137
19.3 Adding engine oil ... 139

20 Cleaning, care ... 141

20.1 Cleaning the motorcycle ... 141
20.2 Checks and maintenance steps for winter operation ... 142

21 Storage ... 144

21.1 Storage ... 144
21.2 Preparing for use after storage ... 145

22 Troubleshooting ... 146

22.1 troubleshooting ... 146

23 Technical specifications ... 148

23.1 Engine ... 148
23.1.1 Technical data - engine ... 148
23.1.2 Capacities - engine ... 149
23.2 Chassis ... 149
23.2.1 Technical data - chassis ... 149
23.2.2 Technical data - tires ... 150
23.2.3 Fuel ... 150
23.2.4 Capacities - vehicle ... 150
23.3 Electrics ... 151
23.3.1 Battery ... 151
23.3.2 Fuses ... 151
23.3.3 Lamps ... 151
23.4 Fork ... 151
23.4.1 Technical data - fork ... 151
23.4.2 Fork oil capacity ... 152
23.5 Shock absorber ... 152
23.5.1 Technical data - shock absorber ... 152
23.5.2 Capacity of shock absorber oil ... 152
23.6 Tightening torque ... 152
23.6.1 Engine tightening torques ... 152
23.6.2 Chassis tightening torques ... 156

24 Declarations of conformity ... 163

24.1 Declarations of conformity ... 163

25 Recycling ... 164

25.1 Recycling ... 164

Notes ... 165

A Technical terms ... 165

B Fuels ... 166

C Operating supplies..... 167
D Cleaning agents..... 169
Index 170

1.1 Conventions

1.1.1 Icons

✓	Indicates a desired result (e.g. of a work step or a function).
✗	Indicates an undesired result (e.g. of a work step or a function).
	All work marked with this symbol requires specialist knowledge and technical understanding. Ensure that this work is carried out or supervised by trained personnel from an authorized contractual partner, and that any special tools required are used.
	Indicates a page reference.
	Indicates information with more details.
	Indicates a tip, e.g. to simplify work.
»	Indicates the result from a test step.
◀	Indicates the end of an activity, including any rework.

1.1.2 Formatting

Proprietary name	Indicates a proprietary name.
Name ®	Indicates a protected name.
Brand ™	Indicates a brand available on the open market.
Underlined terms	Refer to technical details of the vehicle or indicate technical terms that are explained in the glossary.

1.1.3 Abbreviations

2–pc.	two-part
Part no.	Part number
or	respectively
approx.	circa
etc.	et cetera
poss.	possibly/possible
if necessary	if necessary
cmpl.	complete
min.	at least
no.	number
no fig.	no figure
s.	see
among others	among others/not limited to
and the like	and the like
etc.	et cetera
cf.	compare
e.g.	for example

2.1 Safety instructions

Function of the safety instruction

Safety instruction brings attention to dangers when handling the product. Hazards are classified, named, described, and supplemented with information on how to avoid them.

- If there is a safety instruction before a list of instructions, the danger exists throughout the entire activity.
- If there is a safety instruction immediately before an instruction, the next step presents a danger.

Safety instruction layout

All safety instructions are identified by a signal word and a warning symbol. The combination of signal word and warning symbol determines the degree of danger.

DANGER
Indicates an imminent danger that leads to serious injury or death.

WARNING
Indicates a potentially imminent danger that could lead to serious injury or death.

CAUTION
Indicates a potentially imminent danger that can lead to minor or slight injuries.

NOTE
Indicates a situation that can lead to damage to the product or the product environment.

NOTE
Indicates a situation that can lead to environmental damage.

2.2 Consumer rights

Warranty claims must be made to an authorized dealer. If you are not satisfied, please contact:
KTM North America, Inc., Customer Support, 1119 Milan Ave., Amherst, OH 44001, USA
Phone: (440) 985–3553
www.ktmusa.com
KTM Canada, Inc., Customer Support, 8701 Rue Samuel–Hatt, Chambly, QC J3L 6V4, Canada
Phone: (450) 441–4451
www.ktmcanada.com
Different rights may apply, according to national or regional legislation.

2.3 Operating noise warning

This product should be checked for necessary repair or replacement parts if the motorcycle noise has increased significantly through use. Otherwise, the owner may become subject to penalties under the applicable ordinances.

2.4 Manufacturer warranty for the exhaust monitoring system

KTM North America, Inc. guarantees that, at the time of sale, the exhaust monitoring system complies with all the standards of the US Environmental Protection Agency (EPA) and the California Air Resources Board (CARB).

This manufacturer warranty applies in respect of the first owner of the motorcycle and all subsequent owners.

Your exhaust monitoring system may include parts, such as the fuel injection system, ignition, catalytic converter, control units, hoses, connectors and other emission related assemblies, fuel tank, crankcase breather, fuel tank lid for vehicles with fuel evaporation monitoring, oil filler cap, pressure control valve, fuel/vapor separator, canister, ignition coils, ignition wire, capacitors and spark plugs, if a fault occurs before the first scheduled replacement; it may also include the hoses, fittings, and pipes that are used directly in these components.

If the warranty conditions are met, KTM will repair your motorcycle for you free of charge, including diagnosis, parts, and labor.

As the owner of the motorcycle, you are responsible for the required maintenance specified in the Owner's Manual.

Please note that KTM is entitled to reject warranty claims if your motorcycle or a part fails due to misuse, negligence, an accident, participation in racing or similar events, improper maintenance or unauthorized modifications.

Scope of the manufacturer's warranty

- Five (5) years or 30,000 kilometers (18,641 miles), whichever occurs first.

If you have any questions regarding the manufacturer warranty for the exhaust monitoring system, please address these to:

KTM North America, Inc., Customer Support, 1119 Milan Ave., Amherst, OH 44001, USA

Phone: (888) 985-6090

U.S. Environmental Protection Agency, 2000 Traverwood Drive, Ann Arbor, MI 48105, USA

California Air Resources Board, 1001 "I" Street, Sacramento, CA 95814, USA

2.5 Noise emission warranty

KTM warrants that this exhaust system, at the time of sale, meets all applicable U.S. EPA Federal noise standards.

This manufacturer's warranty extends to the first person who purchases this exhaust system for purposes other than resale, and to all subsequent buyers.

Warranty claims should be directed to:

KTM North America, Inc., Customer Support, 1119 Milan Ave., Amherst, OH 44001, USA

Phone: (440) 985–3553

www.ktmusa.com

KTM Canada, Inc., Customer Support, 8701 Rue Samuel–Hatt, Chambly, QC J3L 6V4, Canada

Phone: (450) 441–4451

www.ktmcanada.com

2.6 Reporting safety defects

If you believe that your vehicle has a defect which could cause an accident resulting in injury or death, you should immediately inform the National Highway Traffic Safety Administration (NHTSA) in addition to notifying KTM North America, Inc.

If the NHTSA receives multiple similar complaints, it may open an investigation. and if it finds that a safety defect exists in a group of vehicles, it may order a recall and remedy campaign. However, NHTSA cannot become involved in individual problems between you, your contracting partner, or KTM North America, Inc.

You can contact the NHTSA via the toll-free "Auto Safety Hotline" on 1–888–327–4236, visit the www.nhtsa.dot.gov website, or write to: NHTSA Headquarters, 1200 New Jersey Avenue, SE, West Building, Washington, DC 20590, USA. You can also obtain other information about motor vehicle safety from the hotline.

2.7 Ban on tampering

No changes may be made to the noise control equipment and components.

Tampering that is prohibited

- Removing or disabling any devices or components used for noise control before the new vehicle is sold or delivered to the end customer.
- Removing or disabling any device or component used for noise control for purposes other than service, repair, or replacement during the service life of the vehicle.
- Use of the vehicle after a device or component used for noise control has been removed, disabled, or inadequately maintained.

Examples of prohibited tampering

- Removing or drilling through rear mufflers, baffle plates, manifolds, or other components that conduct exhaust gases.
- Removing or puncturing parts of the intake system.

- Replacing moving parts of the vehicle, or parts of the exhaust system or intake system, with parts other than those specified by the manufacturer.

2.8 Safe use

DANGER

Danger of accidents A rider who is not fit to ride poses a danger to themself and to others.

– Do not operate the vehicle if you are not fit to ride due to alcohol, drugs, or medication.
– Do not operate the vehicle if you are physically or mentally incapable of doing so.

DANGER

Danger of poisoning Exhaust gases are toxic and inhaling them may result in unconsciousness and death.

– Always ensure that there is sufficient ventilation when running the engine.
– Use suitable exhaust extraction when starting or running the engine in an enclosed space.

WARNING

Danger of burns Some vehicle components become hot when the vehicle is operated.

– Do not touch any parts such as the exhaust system, radiator, engine, damper, or brake system before the vehicle parts have cooled down.
– Allow the vehicle parts to cool down before performing any work on the vehicle.

The vehicle should only be used when it is in perfect technical condition, for its intended purpose, and in a safe and environmentally-friendly manner.

An appropriate driver's license is needed to drive the vehicle on public roads.

Have any faults that impair safety immediately remedied by an authorized contractual partner.

Adhere to the information and warning labels on the vehicle.

2.9 Protective clothing

WARNING

Risk of injury Missing or inadequate protective clothing increases the risk of injury.

– Wear appropriate protective clothing such as helmet, boots, gloves as well as pants and a jacket with protectors on all rides.
– Always wear protective clothing that is in good condition and meets the legal regulations.

2.10 Work rules

Unless specified otherwise, the ignition must be switched off during all work (models with ignition lock, models with transponder key) or the engine must be at a standstill (models without ignition lock or transponder key).

Special tools are required for some work. The tools are not part of the vehicle, but can be ordered using the number in parentheses. Example: bearing puller (15112017000)

Unless otherwise noted, normal conditions apply to all tasks and descriptions.

Ambient temperature	20 °C (68.0 °F)
Ambient air pressure	1,013 mbar (14.69 psi)
Relative air humidity	60 ±5 %

During assembly, use new parts to replace parts which cannot be reused (e.g. self-locking screws and nuts, expansion screws, seals, sealing rings, O-rings, pins, and lock washers).

A thread lock (e.g. **Loctite®**) is required for some screw connections. Observe the manufacturer's specific instructions for use.

If thread lock (e.g. **Precote®**) has already been applied to a new part, do not apply any additional thread lock.

After disassembly, clean the parts that are to be reused and check them for damage and wear. Replace damaged or worn parts.

After completing a repair or service, check the operating safety of the vehicle.

2.11 Environment

Handling the vehicle responsibly reduces the risk of conflict with other road users and the surrounding area. The future of motorcycling also depends on using motorcycles legally, being environmentally conscious and respecting the rights of others.

When disposing of used oil, other operating and auxiliary fluids, and used components, the laws and regulations of the respective country must be observed.

As motorcycles are not subject to the EU regulations governing the disposal of end-of-life vehicles, there are no legal regulations that pertain to the disposal of an end-of-life motorcycle. More information is available from the authorized contractual partner.

2.12 Owner's manual

Read this owner's manual carefully and in full before riding off for the first time. The owner's manual contains information and tips on how to operate, handle, and service your vehicle, as well as advice on optimum tuning and how to avoid injuries.

Tip

Save this owner's manual on your smartphone, for example, so that you can access it at any time.

An authorized contractual partner will be happy to assist you if you are unsure.

The owner's manual is an important component of the vehicle. If the vehicle is sold, the owner's manual must be downloaded again by the new owner.

The owner's manual can be downloaded multiple times using the QR code or the link on the delivery certificate.

The owner's manual is also available for download from your authorized contractual partner and on the KTM website.

International KTM Website: https://www.ktm.com

A printed copy can be ordered from the following address.

Website for printed copy: https://print.ktm.com

2.13 Usage definition

The vehicle is designed and constructed to withstand the usual demands of regular traffic and use on gentle terrain (unpaved roads). This vehicle is not suitable for use on race tracks.

Note

The motorcycle is only authorized for operation on public highways in the homologated version.

2.14 Improper use

The vehicle may only be used as intended.

Improper use can result in danger to people, property and the environment.

Any use of the vehicle beyond the intended and defined use constitutes misuse.

Improper use includes the use of operating and auxiliary materials that do not meet the required specifications for the respective use.

2.15 Safety markings on the motorcycle

2.15.1 Overview of labels

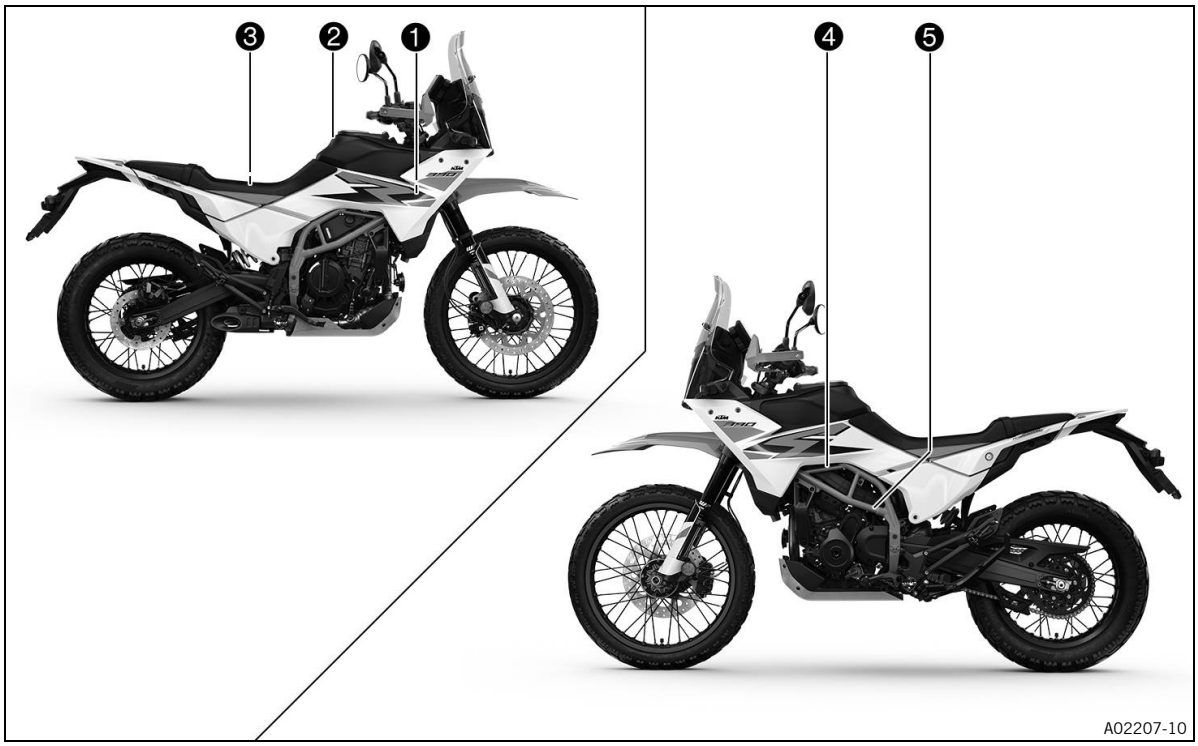

1. Type label USA/CAN
2. Information on preparations for use
3. Information on suspension setting
3. Fuse assignment
4. Information on noise emissions
5. Information on emissions control

2.15.2 Label in detail

Information on preparations for use

MANUFACTURED BY/FABRIQUÉ PAR: BAJAJ AUTO LTD. INDIA FOR KTM AG

GVWR / PNBV: 827 lbs 375 kg Type: Date: 02/25

WHEEL ROUE	GAWR / PNBE:		TIRE PNEU	RIM JANTE	COLD INFLATION PRESSURE PRESSION DE GONFLAGE À FROID		
	lbs	kg			psi/LPC	kPa	bar
FRONT/1st	298	135	90/90-21	1.85x21	29	200	2.0
REAR/2nd	600	272	140/80-18	2.5x18	29	200	2.0

THIS VEHICLE CONFIRMS TO ALL APPLICABLE U.S. FEDERAL MOTOR VEHICLE SAFETY STANDARDS IN EFFECT ON THE DATE OF MANUFACTURE SHOWN ABOVE

VIN/NIV: DUMMY*

THIS VEHICLE CONFIRMS TO ALL APPLICABLE STANDARDS PRESCRIBED UNDER THE CANADIAN MOTOR VEHICLE SAFETY REGULATIONS IN EFFECT ON THE DATE OF MANUFACTURE - CE VEHICULE EST CONFORME A TOUTES LES NORMES QUI LUI SONT, APPLICABLES EN VERTU DU RÈGLEMENT SUR LA SÉCURITÉ DES VÉHICULES AUTOMOBILES DU CANADA EN VIGUEUR À LA DATE DE SA FABRICATION

A02947-10

SAMPLE

Type approval label for CAN/USA

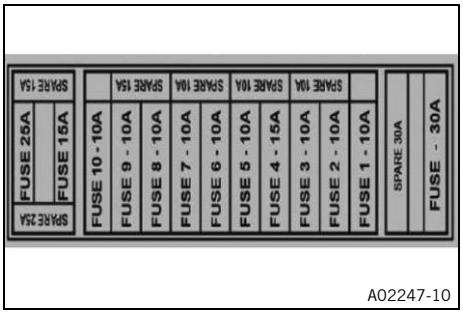

Fuses

390 Adventure R
A610.06.098.100

SETTING (look owner's manual)	FORK Compression	FORK Rebound	FORK Preload Adj.	SHOCK Compr. low speed	SHOCK Compr. high speed	SHOCK Rebound	SHOCK Spring preload (mm)	SHOCK Preload Adj. (turns)
Comfort	20	18	0	20	2	23	15	4
Standard	15	15	0	15	1,5	15	15	4
Sport	10	10	0	10	1	12	15	4
Max. payload	15	15	3	7	0,5			

A02244-10

SAMPLE

Information on suspension setting

MOTORCYCLE NOISE EMISSION CONTROL INFORMATION
KTM AG, AUSTRIA

THIS 2026 KTM9830399 MOTORCYCLE, 963.05.007.000 MEETS EPA NOISE EMISSION REQUIREMENTS OF 80 dBA AT 6500 RPM BY THE FEDERAL TEST PROCEDURE. MODIFICATIONS WHICH CAUSE THIS MOTORCYCLE TO EXCEED FEDERAL NOISE STANDARDS ARE PROHIBITED BY U.S. FEDERAL LAW. SEE OWNER'S MANUAL.

Motorcycle Type : 390 Adventure R

A02945-10

Information on noise emissions

VEHICLE EMISSION CONTROL INFORMATION

KTM

MANUFACTURER: KTM AG, Mattighofen, Austria
IMPORTER: KTM NORTH AMERICA, INC.

ENGINE DISPLACEMENT	399 cc	ENGINE EXHAUST EMISSION CONTROL SYSTEM:	TWC(2), TBI, HO2S(2)
ENGINE FAMILY	TKTXC.399ADR		
EVAPORATIVE FAMILY	TKTXU0012ADR		
PERMEATION FAMILY	TKTXPMETALBC	MODEL NAME	390 Adventure R

THIS VEHICLE CONFORMS WITH US EPA AND CALIFORNIA REGULATIONS APPLICABLE TO 2026 MODEL YEAR NEW MOTORCYCLES AND IS CERTIFIED TO 0.8 G/KM HC+NOX, 12 G/KM CO EXHAUST EMISSON STANDARDS IN CALIFORNIA.

ENGINE TUNEUP SPECIFICATIONS:

IGNITION TIMING:	NON ADJUSTABLE
IDLE SPEED:	1600 +/- 200 RPM IN NEUTRAL
IDLE MIXTURE:	NON ADJUSTABLE
VALVE CLEARANCE:	0.10 - 0.15 mm INTAKE 0.15 - 0.20 mm EXHAUST
SPARK PLUG:	BOSCH VR6NEU
SPARK PLUG GAP:	1.0 mm
FUEL:	UNLEADED GASOLINE ONLY - 91 (R+M)/2 OCTANE OR HIGHER
OIL:	SAE 10 W 50

A02946-10

Information on emissions control

3 Important notes

3.1 Manufacturer's warranty, implied warranty

The work prescribed in the service schedule must only be carried out by an authorized contractual partner and then confirmed in the electronic proof of service, as otherwise all warranty claims will be void. Damage or secondary damage caused by tampering with and/or conversions on the vehicle are not covered by the manufacturer's warranty.

3.2 Auxiliary material, operating material

Use operating materials and auxiliary materials in accordance with the operating instructions and specifications.

3.3 Spare parts, accessories

For safety reasons, only spare parts and accessories approved by KTM may be used. They may only be installed by an authorized contractual partner. KTM accepts no liability for other products and any resulting damage or loss.

Certain spare parts and accessory products are specified in parentheses in the descriptions. Authorized contractual partners will be happy to help.

The current **KTM PowerParts** are listed for each vehicle on the KTM website.

International KTM Website: https://www.ktm.com

3.4 Service

A prerequisite for perfect operation and prevention of premature wear is that the service, care, and tuning work is properly carried out as described in the owner's manual. An incorrect suspension setting can lead to damage and breakage of chassis components.

Use of the vehicle under difficult conditions, such as dusty environments, heavy rain, high heat or with a heavy load, can lead to increased wear of components such as the air filter, powertrain, brake systems, or suspension components. For this reason, it may be necessary to inspect or replace components before the next scheduled service interval.

The prescribed running-in times and service intervals must be observed, otherwise the long-term durability of the vehicle will be severely impaired.

The relevant mileage or time interval is whichever occurs first.

A list of services that have already been carried out on the vehicle can be found in the Service area on the international KTM website:

International KTM Website: https://www.ktm.com

Authorized contractual partners will be happy to answer any questions regarding the services performed.

A list of authorized contractual partners can be found on the KTM website.

3.5 Figures

Some of the figures in this document contain optional extras.

For clarity, some components may be shown disassembled or may not be shown at all. Disassembly is not always absolutely necessary in order to carry out the activities described. The textual information takes precedence.

3.6 Customer service

Authorized contractual partners will be happy to answer questions about the vehicle and KTM.

A list of authorized contractual partners can be found on the KTM website.

International KTM Website: https://www.ktm.com

4.1 View of vehicle, front right (example)

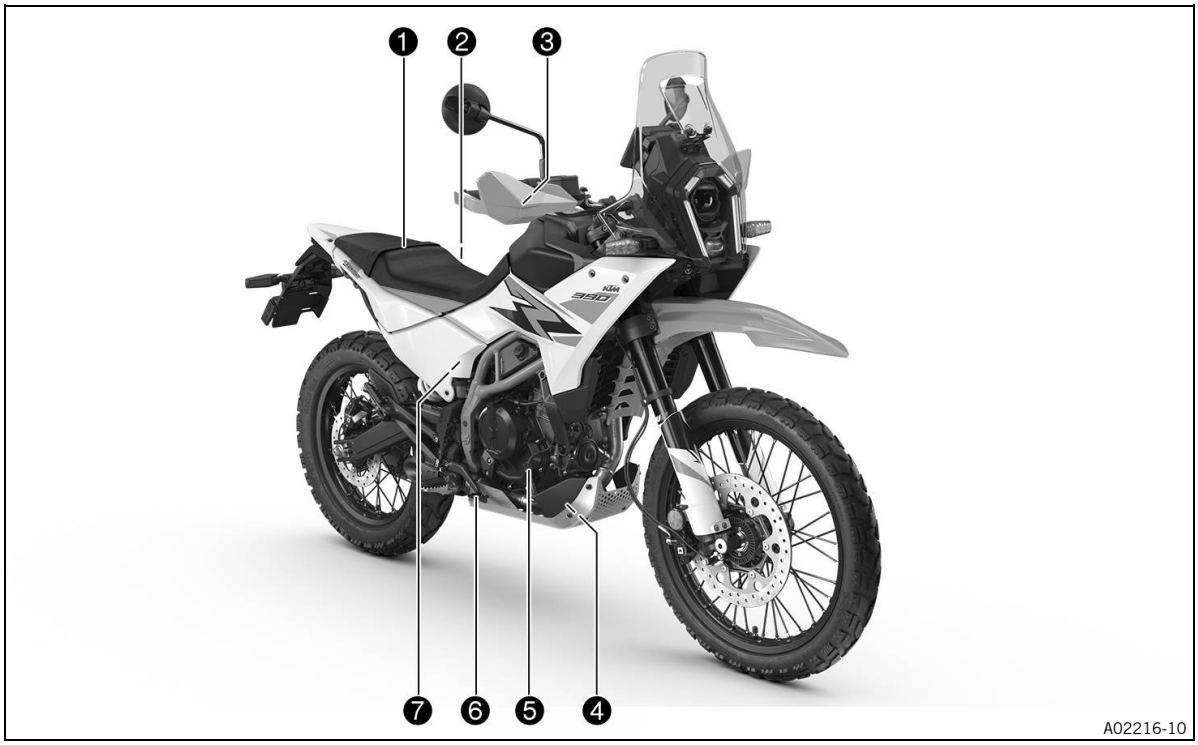

1. Passenger strap (p. 29)
2. Seat lock (p. 29)
3. Handbrake lever (p. 21)
4. Side stand (p. 30)
5. Level viewer, engine oil
6. Brake pedal (p. 30)
7. Shock absorber, spring preload setting

4.2 View of vehicle, rear right (example)

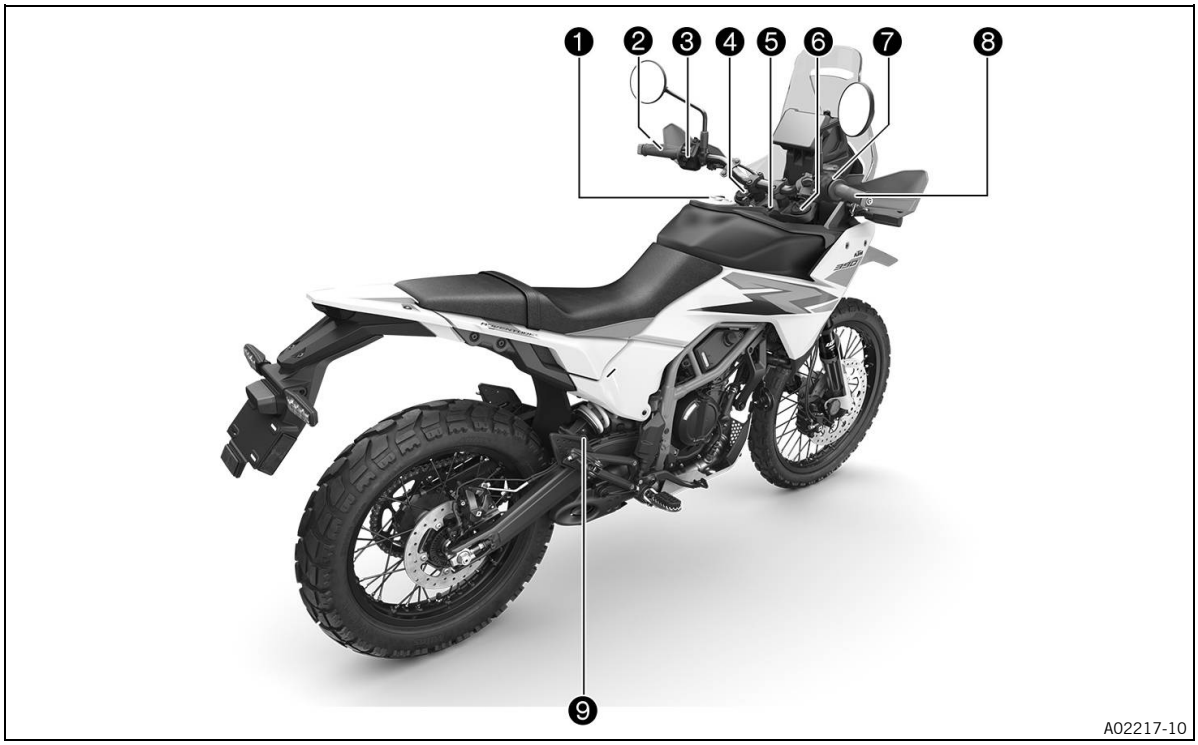

1. Fuel tank cap
2. Clutch lever (p. 21)
3. Light switch (p. 22)
3. Menu buttons (p. 24)
3. Turn signal switch (p. 25)
3. Hazard warning flasher switch (p. 22)
3. Horn button (p. 25)
3. Cruise control system tip switch (optional) (p. 23)
4. Fork compression adjustment
5. Ignition and steering lock (p. 26)
6. Fork rebound adjustment
7. Kill switch (p. 26)
8. Throttle grip (p. 21)
9. Shock absorber rebound adjuster

5.1 Vehicle identification number

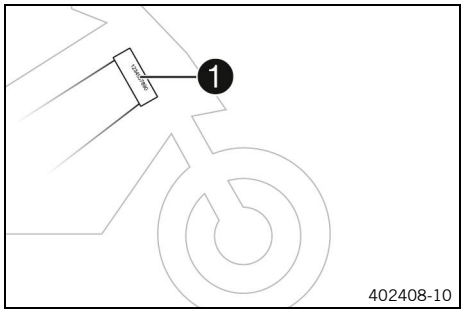

The vehicle identification number ❶ is stamped on the right-hand side of the steering head.

5.2 Type approval label

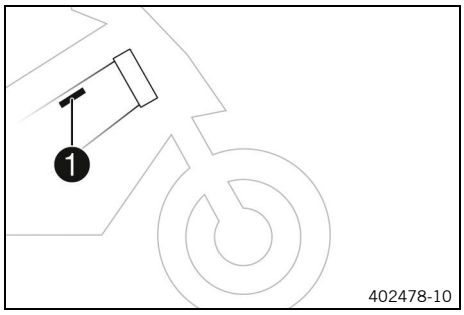

The USA/Canada ❶ type approval label is located on the top frame on the right.

5.3 Key number

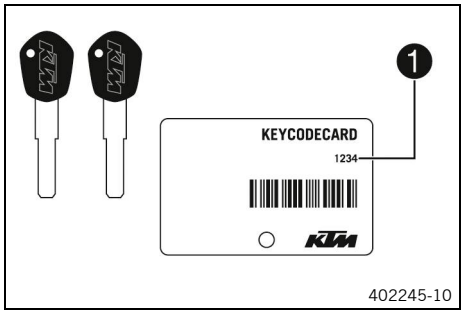

Key number ❶ for the ignition and steering lock is indicated on the key card.

Note
The key number is required to order a spare key and should therefore be kept in a safe place.

5.4 Engine number

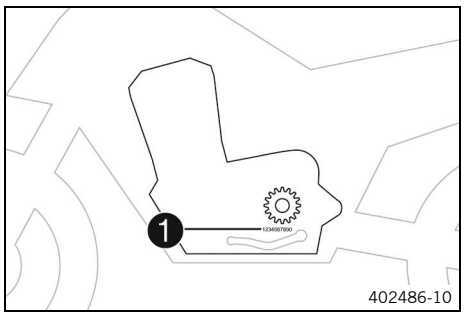

The engine number ❶ is located on the left side of the engine under the engine sprocket.

5.5 Fork part number

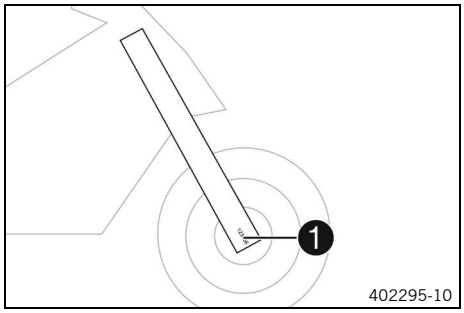

Fork part number ❶ is stamped on the inside of the fork shoe.

5.6 Shock absorber part number

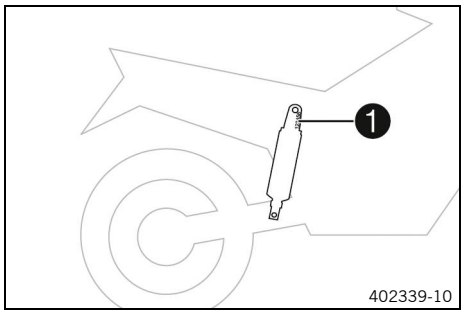

The shock absorber part number ❶ is stamped on the top of the shock absorber.

6.1 Clutch lever

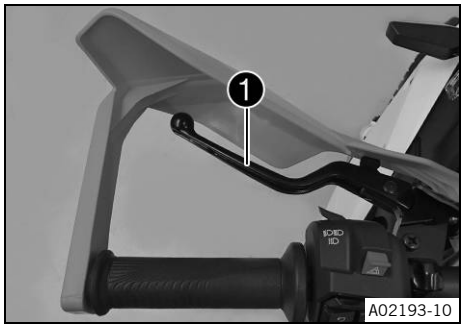

Clutch lever ❶ is fitted on the left side of the handlebar.

6.2 Handbrake lever

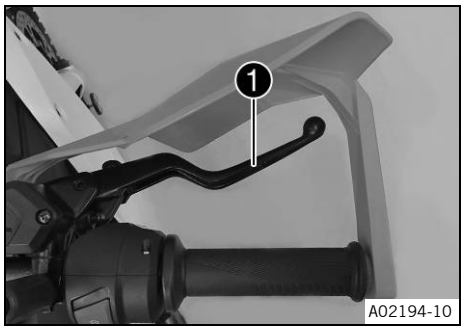

The front brake is engaged using the hand brake lever.
Hand brake lever ❶ is fitted on the right side of the handlebar.

6.3 Throttle grip

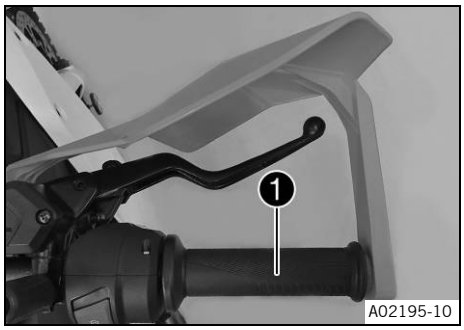

The throttle twist grip ❶ is fitted on the right side of the handlebar.

6.4 Switches on the left side of the handlebar

6.4.1 Combination switch

The combination switch is fitted on the left side of the handlebar.

Overview of the left combination switch

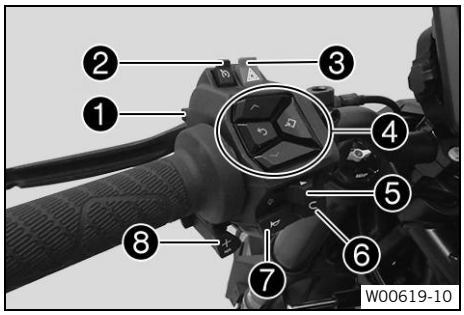

❶ Light switch (p. 22)
❷ Cruise control system tip switch (optional) (p. 23)
❸ Hazard warning flasher switch (p. 22)
❹ Menu buttons (p. 24)
❺ Turn signal switch (p. 25)
❻ **Custom Switch** display
❼ Horn button (p. 25)
❽ +RES/-SET button (p. 24)

6.4.2 Light switch

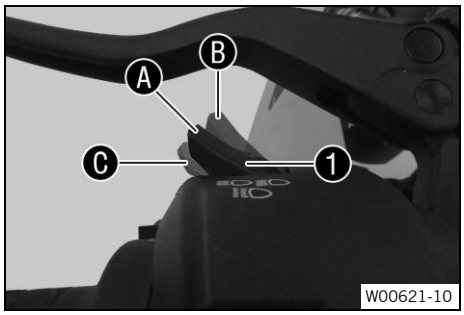

Light switch ❶ is fitted on the left side of the handlebar.

Condition		Meaning
	Light switch in position Ⓐ.	In this position, the low beam and the tail light are switched on.
	Light switch in position Ⓑ.	In this position, the high beam and the tail light are switched on.
	Light switch in position Ⓒ.	The headlight flasher is operated in this position. The light switch returns automatically to the position Ⓐ after use.

6.4.3 Hazard warning flasher switch

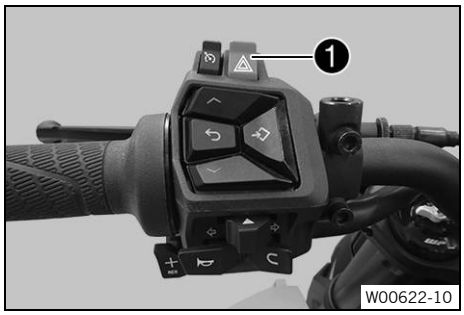

The hazard warning flasher switch ❶ is fitted on the top of the combination switch.

The hazard warning flasher is used to indicate emergency situations.

Note

The hazard warning flasher can be activated or deactivated while the ignition is switched on or up to 60 seconds after the ignition is switched off.

Only keep the hazard warning flasher activated as long as necessary as it depletes the 12-V battery.

Condition	Meaning
Hazard warning flasher switch ⚠ in the basic position	No function
Hazard warning flasher switch ⚠ is pressed	All four turn signals and the indicator lamp for the hazard warning flasher in the combination instrument flash.

6.4.4 Cruise control system tip switch (optional)

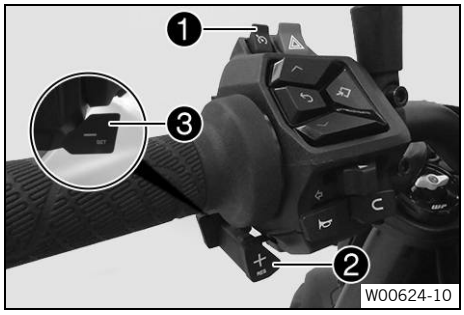

The cruise control system tip switch ❶ is fitted on the left side of the combination switch.

Note
The cruise control system function (optional) must be activated to be able to use the cruise control system.

Condition	Meaning
Cruise control tip switch in the basic position.	No function.
Cruise control tip switch pressed to the left.	Cruise control function is switched on or off. The operating mode is displayed on the combination instrument.
Briefly press cruise control system tip switch in position **RES/+**.	The last saved speed is reapplied. Every subsequent brief pressing increases the target speed by 1 km/h or 1 mph.
Briefly press cruise control system tip switch in position **RES/+**.	In this position, the cruise control system function is activated for the first time if no speed was saved beforehand. The operating mode is displayed on the combination instrument.
Briefly press cruise control system tip switch in position **SET/–**.	In this position, the cruise control system function is activated for the first time if no speed was saved beforehand. The operating mode is displayed on the combination instrument.
Press and hold the cruise control system tip switch in position **RES/+**.	The target speed increases in increments of 5 km/h or 5 mph.
Briefly press cruise control system tip switch in position **SET/–**.	The cruise control function is activated and the current speed is maintained. Every subsequent brief press reduces the target speed by 1 km/h or 1 mph.
Press and hold the cruise control system tip switch in position **SET/–**.	The target speed decreases in increments of 5 km/h or 5 mph.

Note
After activating the cruise control function, the throttle grip can be turned back to the basic position. The selected speed will be maintained.
If the cruise speed is exceeded for less than 30 seconds by turning the throttle grip, the cruise control remains activated.

To switch off the cruise control system function, press the **cruise control system tip switch** to the left.
In addition, the cruise control system function is deactivated when one of the following events occurs:

- Operating the handbrake lever
- Operating the foot brake lever
- Operating the clutch lever
- Control of the motorcycle traction control (**MTC**)
- Slip at the rear wheel or lifting front wheel
- A malfunction occurring, which impairs the cruise control system function
- Exceeding the target speed for more than 30 seconds

WARNING

Danger of accidents The cruise control system function is not suitable for all riding situations.
The selected cruise speed will not be reached if the engine power is not sufficient for a gradient.
The selected target speed will be exceeded if the engine braking effect is not sufficient on an incline.

– Do not use the cruise control systems function on winding roads.
– Do not use the cruise control systems on slippery road surfaces (e.g. rain, ice or snow), where there is poor visibility or on unpaved surfaces (e.g. sand, stones or gravel).
– Do not use the cruise control systems function if the traffic does not permit a constant speed.

The cruise control system function is only available when motorcycle traction control (**MTC**) is activated.
When motorcycle traction control (**MTC**) is switched off, the cruise control system function is also switched off.
The cruise control system function cannot be activated during rapid acceleration.
The cruise control system function cannot be activated in first-gear.

Control range of the cruise control system	20 km/h … 160 km/h (12.4 mph … 99.4 mph)

6.4.5 +RES/-SET button

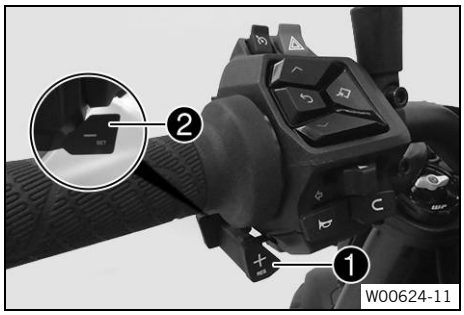

The **+RES** button ❶ is fitted on the front left of the handlebar.
The **–SET** button ❷ is fitted on the rear left of the handlebar.

Note

The **+RES** and **–SET** buttons are used to control the cruise control when the cruise control function is activated.
If the cruise control function is deactivated, the **+RES** and **–SET** buttons in the main display or in the **Slip Adjuster** menu can be used to adjust the **Slip Adjuster**.

6.4.6 Menu buttons

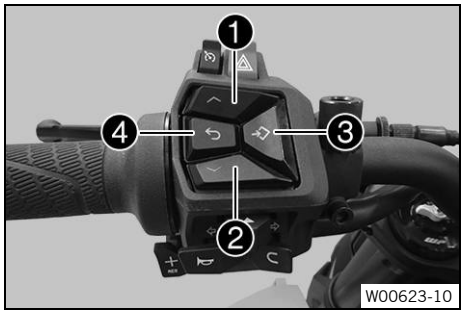

The menu buttons are fitted in the middle of the left combination switch.
The menu buttons are used to control the display on the combination instrument.
Button ❶ is the **UP** button.
Button ❷ is the **DOWN** button.
Button ❸ is the **SET** button.
Button ❹ is the **BACK** button.

6.4.7 Turn signal switch

Turn signal switch ❶ is fitted on the left side of the handlebar.

Condition		Meaning
⇦	Turn signal switch pressed to the left	Left turn signal on.
⇨	Turn signal switch pressed to the right	Right turn signal on.

Note

If the turn signal has been on for at least 10 seconds and the vehicle has traveled 150 meters, the turn signal is automatically switched off by a software function (**ATIR**).

If the vehicle is stationary, both counters are stopped.

If the turn signal switch is reactivated, both counters are reset.

6.4.8 Horn button

Horn button ❶ is fitted on the left side of the handlebar.

Condition	Meaning
Horn buttons in the basic position	No function
Horn buttons pressed	The horn is operated in this position.

6.5 Electric starter

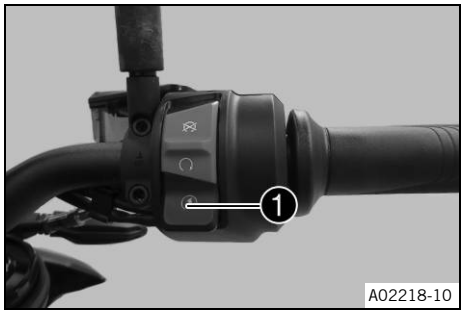

Electric starter ❶ is fitted on the right side of the handlebar.

Condition		Meaning
	Electric starter in the basic position	No function
	Electric starter pressed	In this position, the starter motor is actuated.

6.6 Kill switch

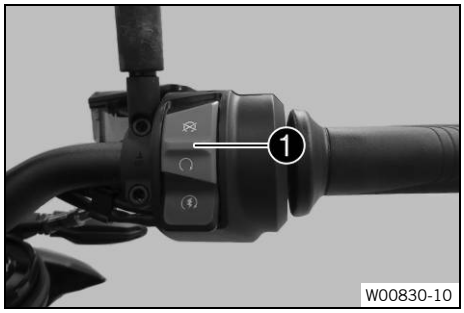

The emergency OFF switch ❶ is fitted on the right side of the handlebar.

Condition		Meaning
	Emergency OFF switch off	In this position, the ignition circuit is interrupted, a running engine stops, and cannot be started. A message appears on the display.
	Emergency OFF switch on	This position is required for operation; the ignition circuit is closed.

6.7 Ignition and steering lock

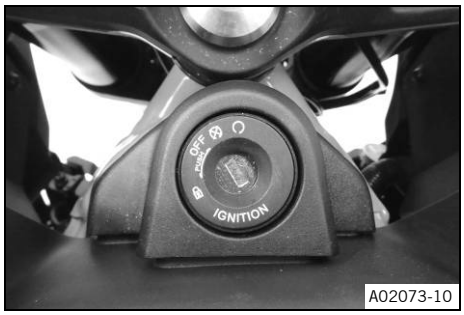

The ignition and steering lock is located in front of the upper triple clamp.

Condition		Meaning
	Ignition off **OFF**	In this position, the ignition circuit is interrupted, a running engine stops, and an engine at a standstill will not start. The ignition key can be removed.
	Ignition on **ON**	In this position, the ignition circuit is closed, and the engine can be started.
	Steering locked **LOCK**	In this position, the ignition circuit is interrupted and the steering locked. The ignition key can be removed.

6.8 Locking the steering

NOTE

Material damage The vehicle may be damaged if parked incorrectly.

Damage can occur if the vehicle rolls away or falls over.

The components for parking the vehicle are designed only for the weight of the vehicle.

– Park the vehicle on a firm and level surface.
– Make sure that nobody sits on the vehicle when it is parked on a stand.

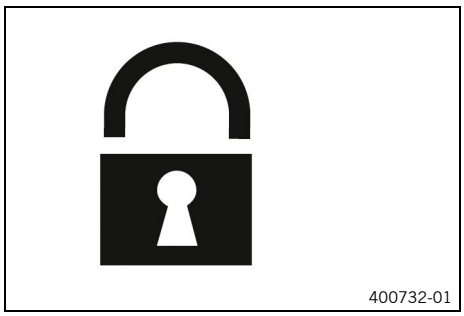

– Park the vehicle.
– Turn the handlebar all the way to the left.
– Insert the ignition key into the ignition and steering lock, press in, and turn to the left. Remove the ignition key.
  ✓ Steering is no longer possible.

6.9 Unlocking the steering

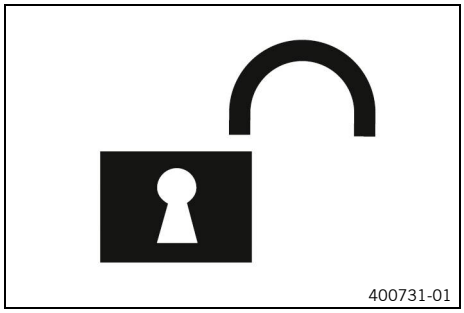

– Insert the ignition key into the ignition and steering lock, press in, and turn to the right. Remove the ignition key.
  ✓ The handlebar can now be moved again.

6.10 USB–C socket

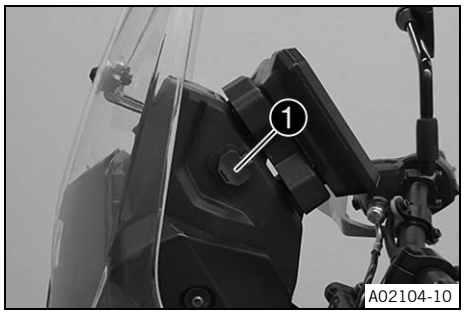

A USB–C socket ❶ for supplying power to external devices is located on the left side of the headlight carrier.
The USB–C socket is switched on with the ignition.

USB–C socket	
Voltage	5 V
Maximum current consumption	2.1 A

6.11 Opening the fuel tank cap

DANGER
Fire hazard Fuel is highly flammable.
The fuel in the fuel tank expands when warm and can escape if overfilled.
– Do not refuel the vehicle in the vicinity of open flames, glowing, or smoldering objects.
– Make sure that nobody smokes in the vicinity of the vehicle during the refueling process.
– Switch off the engine for refueling.
– Make sure that no fuel is spilled; particularly not on hot parts of the vehicle.
– If any fuel is spilled, wipe it up immediately.
– Do not overfill the fuel tank.

WARNING
Danger of poisoning Fuel is harmful to health.
– Do not allow fuel to come into contact with skin, eyes, or clothing.
– Consult a doctor immediately if fuel has been ingested.
– Do not inhale fuel vapors.
– Rinse the affected area immediately with plenty of water in the event of contact with skin.
– Rinse eyes thoroughly with water and consult a doctor immediately if fuel comes into contact with eyes.
– If fuel spills on to your clothing, change the clothing.
– Store fuel properly in a suitable container and keep out of the reach of children.

NOTE
Environmental hazard Improper handling of fuel is dangerous to the environment.
– Do not allow fuel to enter the groundwater, the soil, or the sewage system.

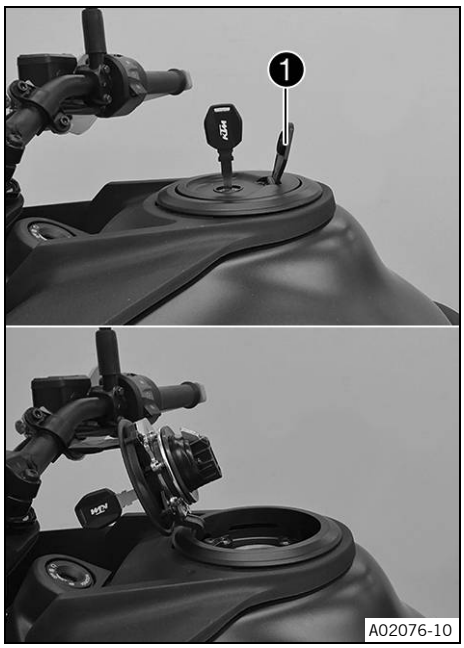

– Lift cover ❶ of the fuel tank filler cap and insert the ignition key into the lock.

NOTE

Danger of damage The ignition key may break if overloaded.

– Push down on the fuel tank filler cap to take pressure off the ignition key.

– Turn the ignition key 90° clockwise.
– Lift the fuel tank filler cap.

6.12 Closing the fuel tank cap

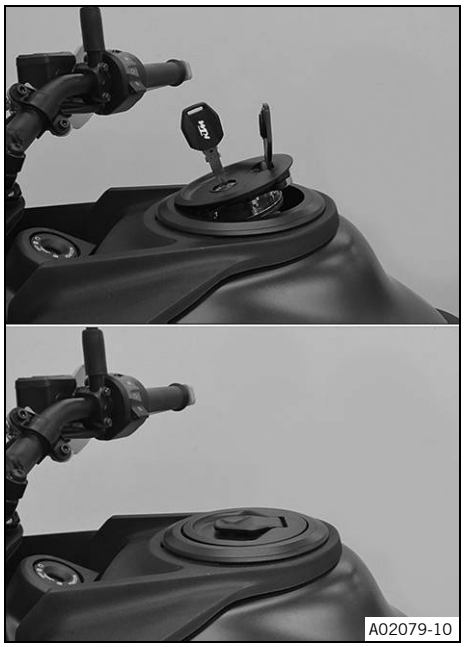

WARNING

Fire hazard Fuel is highly flammable and a health hazard.

– Check that the fuel tank filler cap is locked correctly after closing.
– If fuel spills on to your clothing, change the clothing.
– Rinse the affected area immediately with plenty of water in the event of contact with skin.

– Fold down the fuel tank filler cap.
– Turn the ignition key 90° clockwise.
– Push down the fuel tank filler cap and turn the ignition key counterclockwise until the fuel tank filler cap lock engages.
– Remove the ignition key and close the cover.

6.13 Seat lock

The seat lock ❶ is located to the left of the seat.
The seat lock can be unlocked using the ignition key.

6.14 On-board tool kit

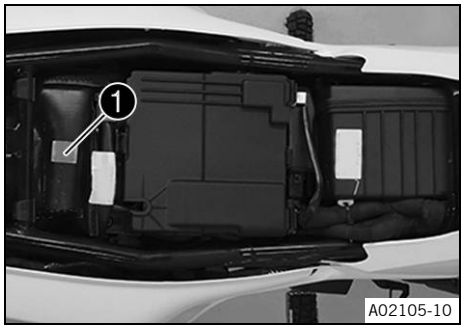

Tool set ❶ is located under seat.

6.15 Passenger strap

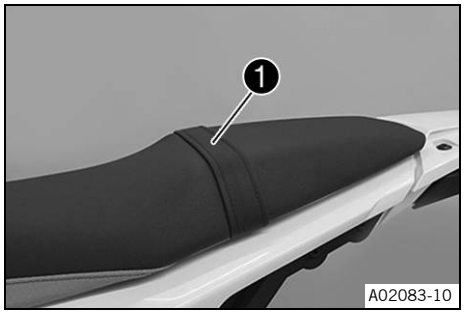

Passenger strap ❶ is mounted on the seat.

Note
The passenger can hold onto the supporting strap ❶ during the trip.

6.16 Passenger footpegs

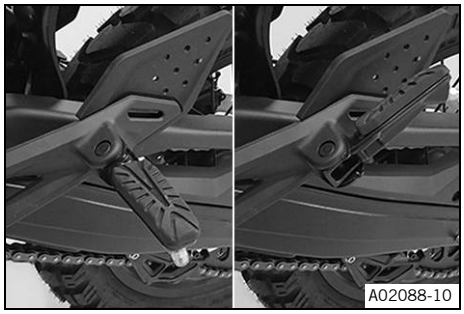

The passenger foot pegs can be folded up and down.

Condition	Meaning
Passenger foot pegs folded up	For operation without a passenger (solo).
Passenger foot pegs folded down	For operation with a passenger.

6.17 Gear shift lever

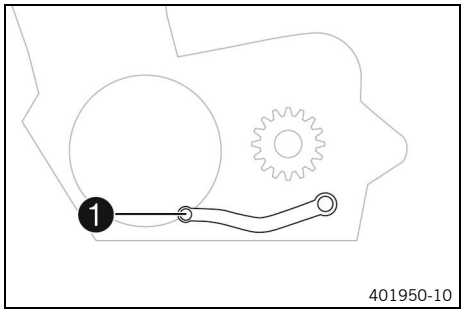

Gear shift lever ❶ is mounted on the left of the engine.

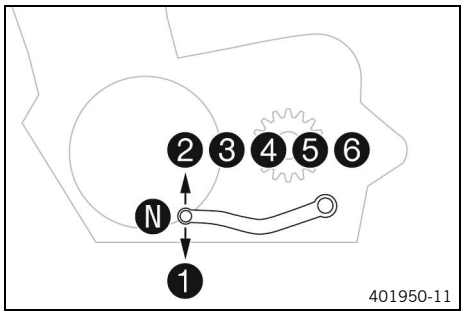

The gear positions can be seen in the figure.
The neutral or idle position is between the first and second gears.

6.18 Brake pedal

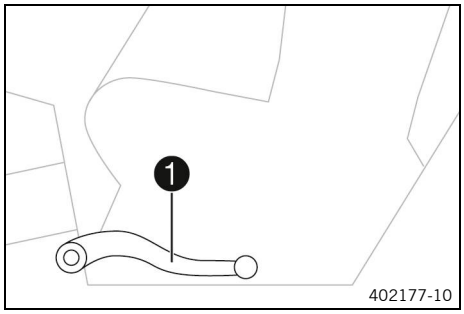

The rear brake is operated with the brake pedal.
Brake pedal ❶ is located in front of the right footpeg.

6.19 Side stand

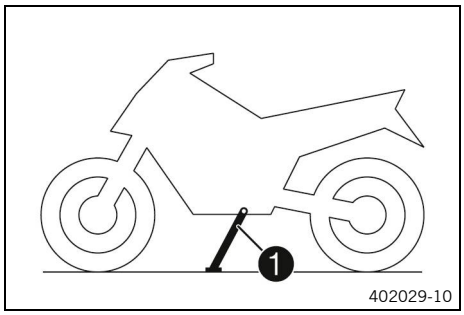

The side stand ❶ is located on the left of the vehicle.
The side stand is used for parking the motorcycle.

Note

The side stand must be folded up during use.

The side stand is coupled with the safety starting system; follow the riding instructions.

Condition	Meaning
Side stand folded out	The vehicle can be supported on the side stand. The safety starting system is active.
Side stand folded in	This position is mandatory when riding the motorcycle. The safety starting system is inactive.

Note

The side stand must be folded up during use.

The side stand is coupled with the safety starting system; follow the riding instructions.

7.1 Dashboard

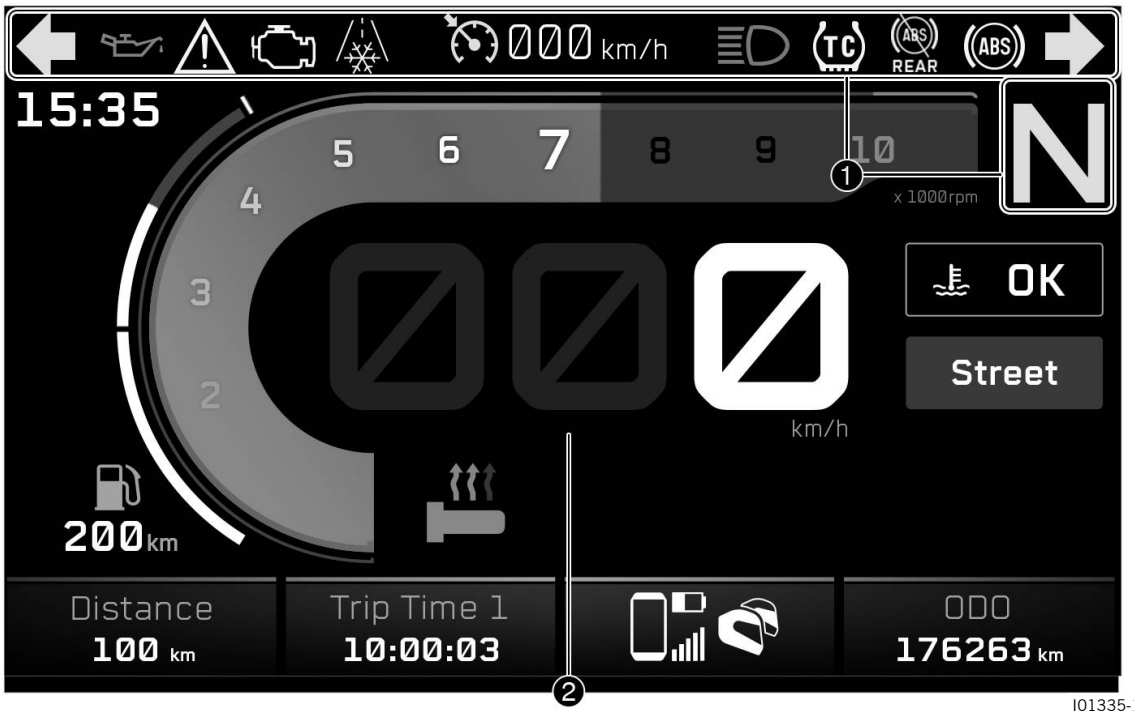

I01335-10

The combination instrument is attached in front of the handlebar.
The combination instrument is divided into two function areas.

❶ indicator lamps (p. 34)
Display ❷

CAUTION
Danger of burns Parts of the combination instrument become hot in certain situations.
The display in particular can heat up considerably at ambient temperatures above 55 °C (131 °F) during long periods of inactivity, e.g. at traffic lights, or in direct sunlight.
- Do not touch the combination instrument with bare hands in the situations referred to.
- Where appropriate protective clothing.
- In the event of burns, rinse the area affected immediately with lukewarm water.

7.2 activation and testing

7.2.1 Activation

I00195-01

The dashboard is switched on with the ignition.

Note
The brightness of the displays is controlled by an ambient light sensor in the combination instrument.

7.2.2 Test

The welcome message appears on the display and all indicator lamps, except for the TC indicator lamp , are briefly illuminated to check that they are working properly.

Note

The malfunction indicator lamp always lights up as long as the engine is not running. If the engine is running and the failure indicator light lights up, stop (taking care not to endanger yourself or other road users in the process) and contact an authorized dealer.

The oil pressure warning lamp always lights up as long as the engine is not running. If the engine is running and the oil pressure warning lamp lights up, stop immediately (taking care not to endanger yourself or other road users in the process) and switch off the engine.

The ABS warning lamp and TC indicator lamp light up until a speed of approx. 6 km/h (approx. 4 mph) or faster has been reached.

7.3 warnings

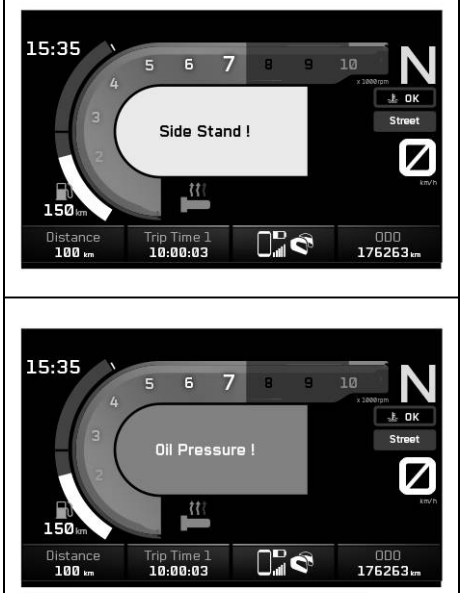

I01339-01

Warnings appear in the middle of the display; these are marked yellow or red depending on their relevance.

Yellow warnings indicate a malfunction or information which requires prompt intervention or an adjustment to the riding style.

Red warnings indicate a malfunction or information which requires immediate intervention.

Note

Warnings can be hidden by pressing any button.

All the existing warnings are displayed in the **Warning** submenu until they are no longer active.

7.4 indicator lamps

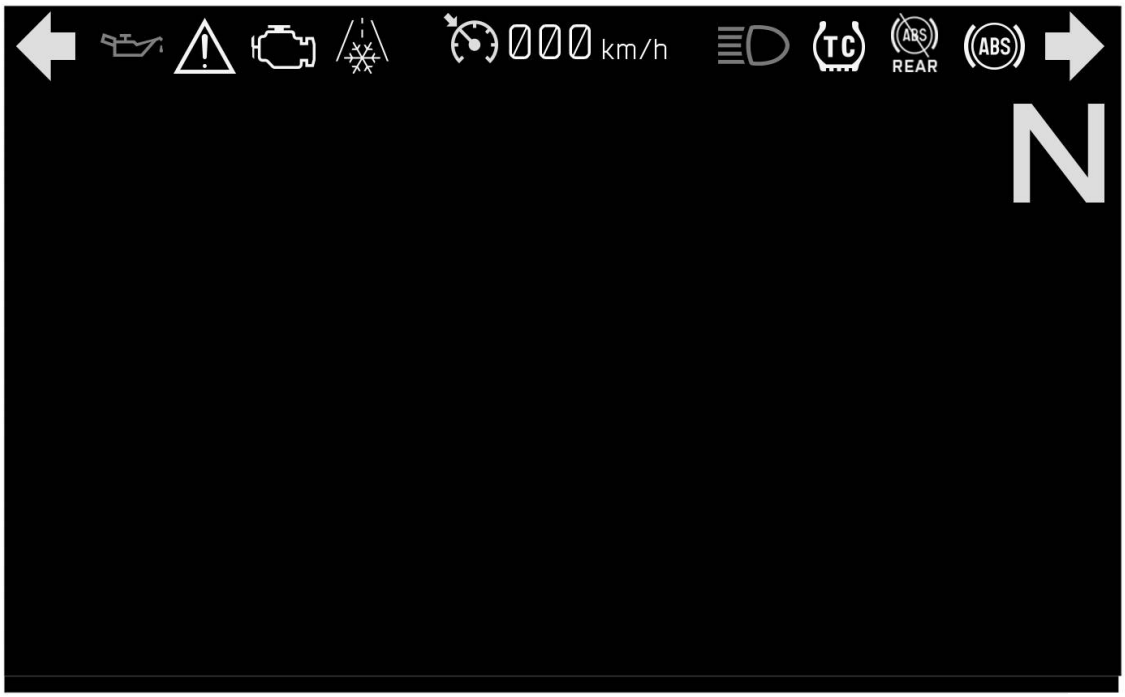

I01336-10

The indicator lamps offer additional information about the operating state of the motorcycle.

When the ignition is switched on, all indicator lamps light up briefly, except for the TC indicator lamp .

Note

The malfunction indicator lamp always lights up as long as the engine is not running. If the engine is running and the failure indicator light lights up, stop (taking care not to endanger yourself or other road users in the process) and contact an authorized dealer.

The oil pressure warning lamp always lights up as long as the engine is not running. If the engine is running and the oil pressure warning lamp lights up, stop immediately (taking care not to endanger yourself or other road users in the process) and switch off the engine.

The ABS warning lamp and TC indicator lamp light up until a speed of approx. 6 km/h (approx. 4 mph) or faster has been reached.

Condition		Meaning
	The turn signal indicator light flashes green with a steady blinking interval	The turn signal is switched on.
	The malfunction indicator light lights up yellow	The **OBD** has detected a malfunction in the vehicle electronics. Come safely to a halt, and contact an authorized dealer.
	ABS warning light lights up yellow	Status or error messages relating to **ABS**.
	The ABS rear warning light lights up yellow	**ABS** is deactivated on the rear wheel.
	The idle indicator lamp lights up green	The transmission is in the neutral position.

Condition		Meaning
	TC indicator lamp lights up/flashes yellow	**MTC** is not active or is currently regulating. The TC indicator lamp also lights up if a malfunction is detected. Contact an authorized contractual partner. The TC indicator lamp flashes if **MTC** makes an active intervention.
	The oil pressure warning light lights up red	The oil pressure is too low. Stop immediately, taking care not to endanger yourself or other road users in the process, and switch off the engine.
	The cruise control system indicator lamp (optional) lights up yellow	The cruise control system function (optional) is switched on, but the speed control is not active.
	The cruise control system indicator lamp (optional) lights up green	The cruise control system function (optional) is switched on and the speed control is active.
	The high beam indicator lamp lights up blue	The high beam is switched on.
	General warning light lights up yellow	A note/warning note on operating safety has been detected. This is also shown in the display.
	Ice warning is active on the display.	The warning lamp lights up when there is increased risk of icy roads.

7.5 Display

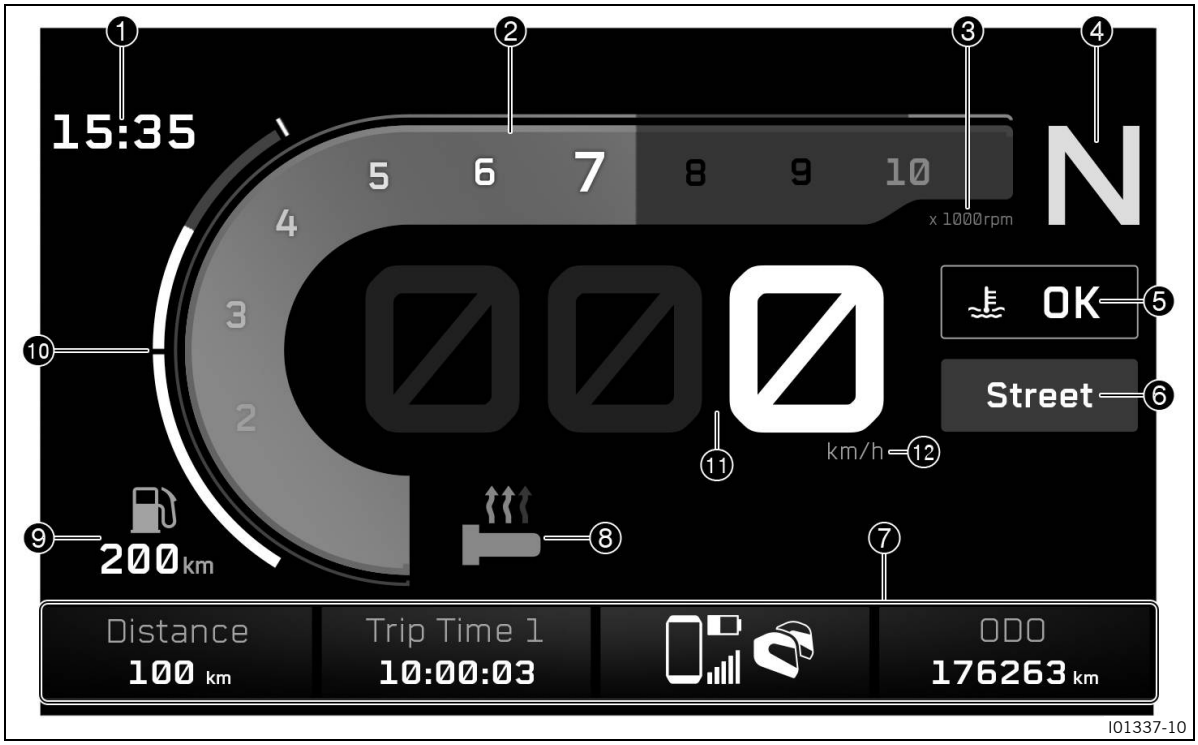

1. time (p. 38)
2. speed (p. 36)
2. shift light (p. 37)
   The shift light is integrated in the rpm gauge display.
3. Unit for the engine speed display
4. Gear display
5. coolant temperature indicator (p. 39)
6. **Ride–Mode** display (p. 38)
7. **Favorites** display (p. 40)
8. heated grip (optional) (p. 40)

❾ Fuel range display
❿ fuel level display (p. 39)
⓫ speed display (p. 37)
⓬ Unit of speed

7.6 Reduced display

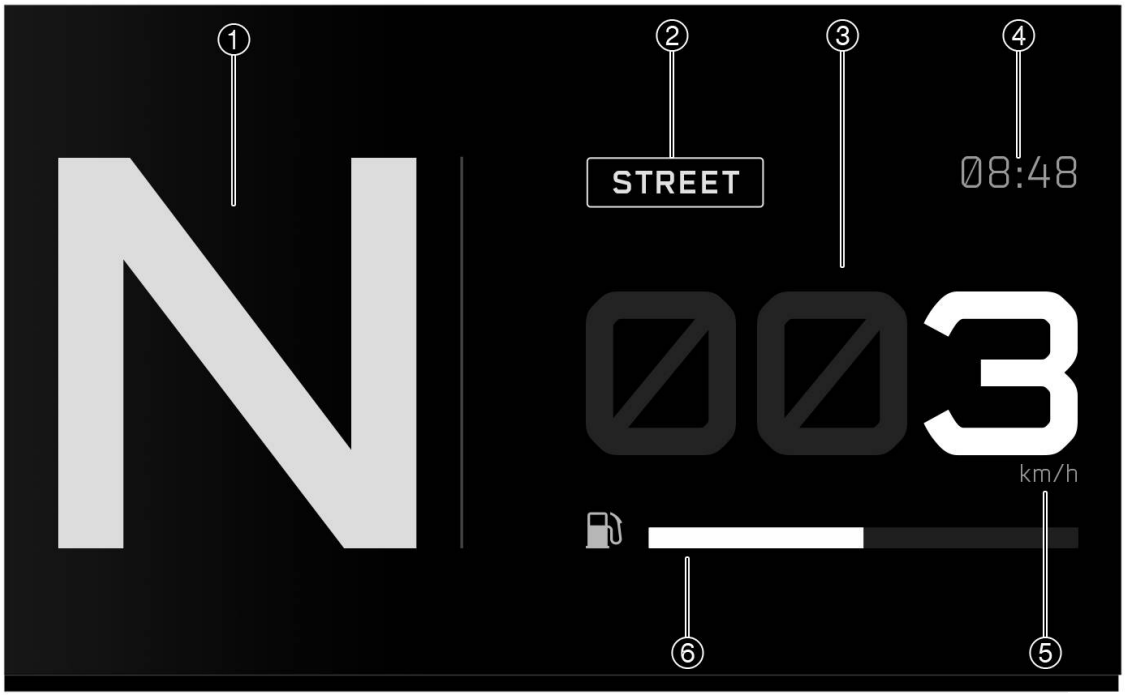

I01338-10

❶ Gear display
❷ **Ride–Mode** display (p. 38)
❸ speed display (p. 37)
❹ time (p. 38)
❺ Unit of speed
❻ fuel level display (p. 39)

7.7 speed

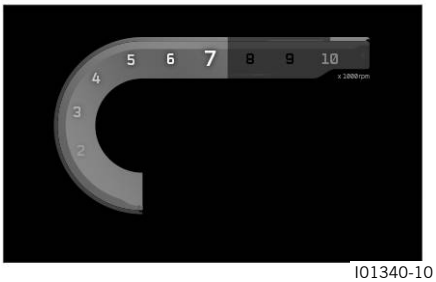

I01340-10

The engine speed is displayed in revolutions per minute.

7.8 shift light

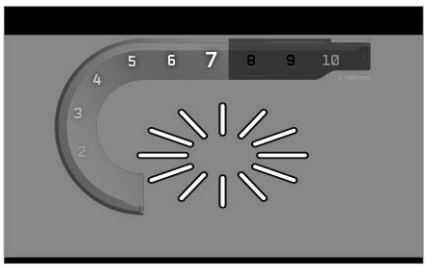

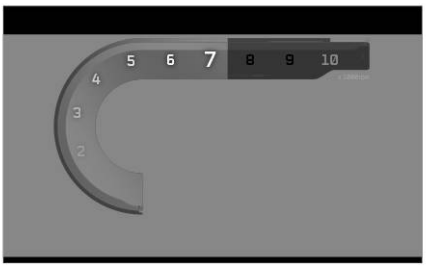

I01344-01

The shift warning light is integrated in the display.

In the **Shift Light** submenu, the engine speed for the shift warning light can be set. During the run-in time (up to 1000 km / 621 miles), the shift light is always active. The shift warning light can only be deactivated, and the values for **RPM1** and **RPM2** can only be adjusted after this. At **RPM1**, the display flashes and at **RPM2**, the entire display is continuously red/orange.

Note

After the first service, the shift warning light is deactivated when the engine is warm and in sixth-gear.

Coolant temperature	≤ 35 °C (≤ 95.0 °F)
ODO	< 1,000 km (< 621.4 mi)
The shift warning light always flashes at	6,500 rpm (108.33 Hz)

Coolant temperature	> 35 °C (> 95.0 °F)
ODO	> 1,000 km (> 621.4 mi)
RPM1 shift warning light	flashes
RPM2 shift warning light	Lights up continuously

7.9 speed display

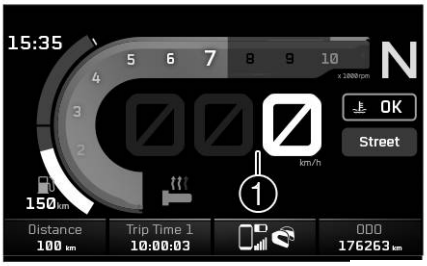

I01341-10

The speed is shown in area ❶ of the display.

Speed is shown in kilometers per hour **km/h** or in miles per hour **mph**.

The unit of speed can be configured in the **Distance** submenu.

7.10 Cruise control indicator (optional)

I01645-10

The operating state of the active cruise control (optional) is shown in the area ❶ of the display.

Cruise control (optional) is operated using the combination switch.

Note

If the cruise control function (optional) is switched on, but cruise control (optional) is not active, the cruise control indicator light lights up yellow.

If the cruise control function (optional) is switched on, and cruise control (optional) is active, the cruise control indicator light lights up green.

7.11 time

I01341-11

The time is shown in area ❶ of the display.

The time can be displayed in 24-hour format or 12-hour format in all languages.

The format of the time can be configured in the **Clock Format** menu.

Note

The time must be reset if the 12 V battery was disconnected from the vehicle or the fuse was removed.

7.12 Ride–Mode display

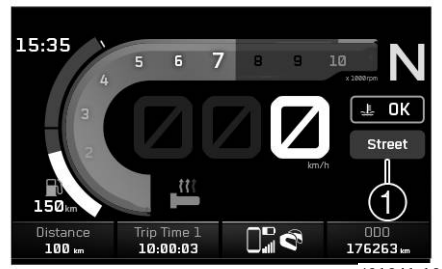

I01341-13

The **Ride Mode** setting is shown in area ❶ of the display.

The drive mode can be configured in the **Ride Mode** submenu.

7.13 coolant temperature indicator

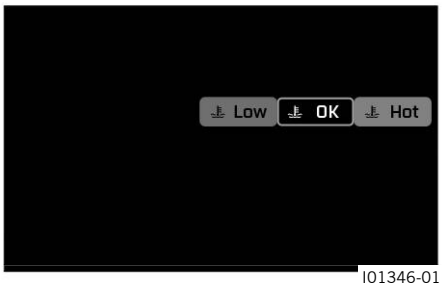

I01346-01

The coolant temperature is displayed by a symbol. The symbol changes between **LOW**, **OK** and **HOT** depending on the temperature.

NOTE

Engine failure Overheating damages the engine.

- If the coolant temperature warning is displayed, stop immediately and take care not to endanger yourself or other traffic participants in the process.
- Allow the engine and cooling system to cool down.
- Check and, if necessary, correct the coolant level on the cooling system while it is in a cooled state.

Note

If the coolant temperature indicator shows **HOT**, the indicator also starts to flash.

If the cooling system overheats, the maximum engine speed is limited.

Condition	Meaning
The coolant temperature indicator shows **LOW**.	The engine is cold
The coolant temperature indicator shows **OK**.	Engine warm
The coolant temperature indicator shows **HOT**.	Engine hot

7.14 fuel level display

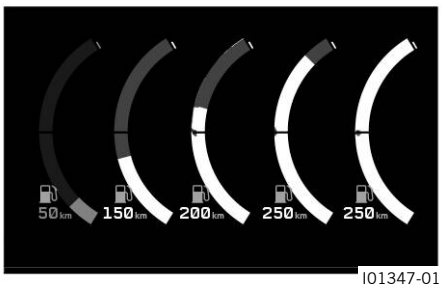

I01347-01

The fuel level display consists of the fuel range display and a bar. The higher the bar is filled, the more fuel there is in the fuel tank.

Note

If the fuel level is getting low, the last segment flashes red and the following warning **LOW FUEL** also appears.

The fuel level is displayed with a slight delay to prevent the indicator from constantly moving while riding.

The fuel level display is not updated while the side stand is folded out or the emergency OFF switch is switched off.

Once the side stand is folded up and the kill switch is switched on, the fuel level display is next updated after 2 minutes.

The fuel level display flashes if the combination instrument does not receive a signal from the fuel level sensor.

7.15 heated grip (optional)

I01341-14

The status of the heated grip is shown in area ❶ of the display.
The heated grip can be configured in the **Heated Grips** menu.

7.16 Favorites display

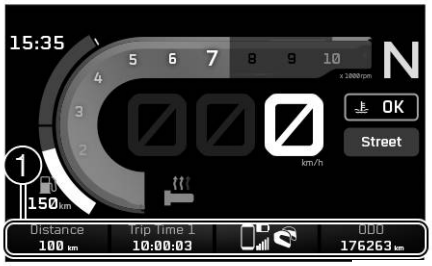

I01341-15

Up to four items of information are displayed in the **Favorites** display ❶.
The **Favorites** display can be freely configured in the **Favorites** submenu.

7.17 Quick Selector 1 display

I01351-01

When the menu is closed, the **Quick Selector 1** display is opened by pressing the **UP** button.
Press the **BACK** button to close the **Quick Selector 1** display.

Note
The **Quick Selector 1** display can be configured in the **Settings** menu under **Quick Selector 1**. Any information can be selected.

7.18 Quick Selector 2 display

I01352-01

When the menu is closed, the **Quick Selector 2** display is opened by pressing the **DOWN** button.
Press the **BACK** button to close the **Quick Selector 2** display.

Note
The **Quick Selector 2** display can be configured in the **Settings** menu under **Quick Selector 2**. Any information can be selected.

7.19 Navigation display (optional)

I01348-01

The **Navigation** indicator (optional) appears when the navigation function is activated.

In the **Navigation** display (optional), the direction arrow, the distance from the destination, the estimated arrival time of the cell phone, the distance to the next waypoint, and the street name are displayed.

The **Navigation** display (optional) can be switched on or off in menu **Navigation** (optional).

Conditions for use:

- The combination instrument is connected to a suitable cell phone.
- The **KTMconnect** app (optional) is installed and connected on a suitable cell phone (Android devices from version 7.0, iOS devices from version 14).

7.20 Call display

I01349-01

WARNING

Danger of accidents Headphone volume which is too high distracts attention from traffic activity.

– Always select headphone volume which is low enough for you to still clearly hear acoustic signals.

The **Call** indicator appears for incoming or active calls.

Press the **SET** button to accept an incoming call.

Press the **BACK** button to reject an incoming call.

Press the **UP** button to increase the audio volume.

Press the **DOWN** button to reduce the audio volume.

Note

It is not possible to change the audio volume using the combination switch with every cell phone.

The call duration and contact are displayed. Depending on the cell phone settings, the contact is shown by name.

You cannot navigate in the menu during an active phone conversation.

Condition for use:

- The dashboard is connected to a suitable cell phone.

7.21 Remote Control Mode (optional)

I01350-01

The **Remote Control Mode** indicator (optional) appears when **Remote Control Mode** is activated.

Pressing the **BACK** button for approx. 3 seconds activates the **Remote Control Mode** (optional).

Pressing the **BACK** button for approx. 3 seconds exits the **Remote Control Mode** (optional).

If **Remote Control Mode** (optional) is activated, you can navigate using the combination switch in the app on a cell phone.

Note

In **Remote Control Mode** (optional), you can only navigate within the app.

If **Remote Control Mode** (optional) is active, you cannot navigate in the combination instrument.

Remote Control Mode (optional) cannot be activated when a menu is open.

Conditions for use:

- The dashboard must be connected to a suitable cell phone.
- The **KTMconnect** app (optional) must be installed, connected and opened on a suitable cell phone (Android devices from version 7.0, iOS devices from version 14).

7.22 Menu

7.22.1 Menu

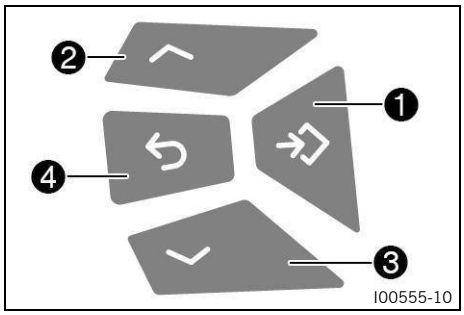

Note

Press the **SET** button ❶ on the start screen to open the menu.

Navigate through the menu using the **UP** button ❷ or the **DOWN** button ❸.

By pressing the **BACK** button ❹, the menu structure jumps one step back, or the menu is closed.

7.22.2 Motorcycle

– Press the **SET** button when the menu is closed.
– Press the **UP** or **DOWN** button until **Motorcycle** is highlighted. Pressing the **SET** button opens the menu.

The ride mode, ABS mode, QUICKSHIFTER+ and the **Motorcycle** can be set in **Display Mode**.

7.22.2.1 Ride Mode

– Press the **SET** button when the menu is closed.
– Press the **UP** or **DOWN** button until **Motorcycle** is highlighted.
– Pressing the **SET** button opens the menu.

WARNING

Danger of accidents An incorrectly selected ride mode makes it more difficult to control the vehicle.

The riding modes are each only suitable for certain conditions.

– Always select a riding mode that suits the surface on which you are riding, the weather and the riding situation.

– Press the **UP** or **DOWN** button until **Ride Mode** is highlighted.
– Press the **SET** button to open the submenu.
– Activate the menu item using the **UP** or **DOWN** button.
– Press the **SET** button to select the riding mode, which changes coordinated settings for the engine and motorcycle traction control.
  ✓ **Street** - Homologated performance with direct response.
  ✓ **Rain** - Reduced homologated performance with soft responsiveness for better rideability.
  ✓ **Offroad** - Homologated performance with very direct responsiveness

The riding mode of the vehicle can be configured in the **Ride Mode** menu.

7.22.2.2 Adjusting Ride Mode

– Press the **SET** button when the menu is closed.
– Press the **UP** or **DOWN** button until **Motorcycle** is highlighted.
– Pressing the **SET** button opens the menu.
– Press the **UP** or **DOWN** button until **Configure Ride Mode** is marked.
– Press the **SET** button to open the submenu.

Features of the **Ride Mode**, such as ABS, **MTC**, or **Display Mode** can be adjusted in **Configure Ride Mode**.

7.22.2.3 ABS

– Press the **SET** button when the menu is closed.
– Press the **UP** or **DOWN** button until **Motorcycle** is highlighted.
– Pressing the **SET** button opens the menu.
– Press the **UP** or **DOWN** button until **Configure Ride Mode** is marked.
– Press the **SET** button to open the submenu.
– Press the **UP** or **DOWN** button until **ABS** is highlighted.
– Press the **SET** button to open the submenu.
– Activate the menu item using the **UP** or **DOWN** button.

WARNING

Danger of accidents An incorrectly selected ABS mode makes it more difficult to control the vehicle.

The ABS modes are each only suitable for certain conditions.

– Always select an ABS mode that suits the ground and the riding situation.

– Press the **SET** button to select the desired ABS mode.

Do not open the throttle during the selection.

Note

The ABS mode can be switched during the journey.

When the ABS mode **Road** is active, ABS controls both wheels.

When the **Offroad** ABS mode is active, ABS only controls the front wheel. The rear wheel is no longer controlled by ABS and may lock during braking maneuvers. The indicator lamp **ABS REAR** lights up.

7.22.2.4 MTC

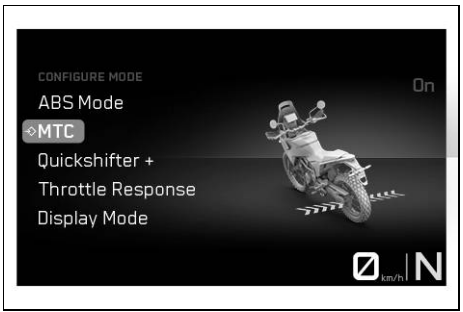

Condition: Cruise control function deactivated

– Press the **SET** button when the menu is closed.
– Press the **UP** or **DOWN** button until **Motorcycle** is highlighted.
– Pressing the **SET** button opens the menu.
– Press the **UP** or **DOWN** button until **Configure Ride Mode** is marked.
– Press the **SET** button to open the submenu.
– Press the **UP** or **DOWN** button until **MTC** is highlighted.
– Press the **SET** button to open the submenu.
– Activate the menu item using the **UP** or **DOWN** button.
– Switch **SET** on or off by pressing the **MTC** button.

Do not open the throttle when switching on or off.
Press the **SET** button briefly when activating the motorcycle traction control.
Hold down the **SET** button when switching off the motorcycle traction control.

7.22.2.5 QUICKSHIFTER+ (optional)

Condition: Model with QUICKSHIFTER+

– Press the **SET** button when the menu is closed.
– Press the **UP** or **DOWN** button until **Motorcycle** is highlighted.
– Pressing the **SET** button opens the menu.
– Press the **UP** or **DOWN** button until **Configure Ride Mode** is marked.
– Press the **SET** button to open the submenu.
– Press the **UP** or **DOWN** button until **QUICKSHIFTER+** is highlighted.
– Press the **SET** button to open the submenu.
– Activate the menu item using the **UP** or **DOWN** button.

– Press the **SET** button to switch QUICKSHIFTER+ button on or off.

7.22.2.6 Display Mode

– Press the **SET** button when the menu is closed.
– Press the **UP** or **DOWN** button until **Motorcycle** is highlighted.
– Pressing the **SET** button opens the menu.
– Press the **UP** or **DOWN** button until **Configure Ride Mode** is marked.
– Press the **SET** button to open the submenu.
– Press the **UP** or **DOWN** button until **Display Mode** is highlighted.
– Press the **SET** button to open the submenu.
– Activate the menu item using the **UP** or **DOWN** button.
– You can switch between the minimum, normal and no favorites speedometer views by pressing the **SET** button.

7.22.3 Bike info

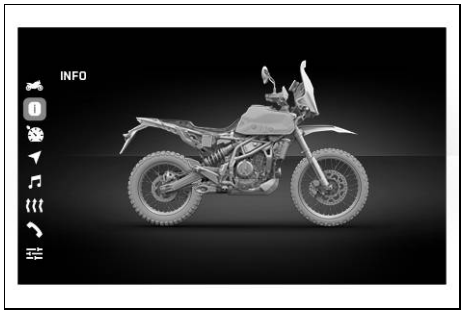

– Press the **SET** button when the menu is closed.
– Press the **UP** or **DOWN** button until **Bike Info** is highlighted. Pressing the **SET** button opens the menu.

General information and warnings that may be present can be called up in **Bike Info**.

7.22.3.1 Trip 1

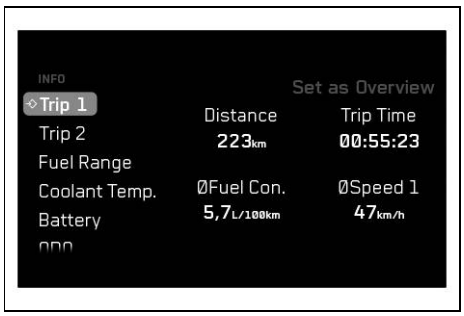

– Press the **SET** button when the menu is closed.
– Press the **UP** or **DOWN** button until **Bike Info** is highlighted.
– Pressing the **SET** button opens the menu.
– Press the **UP** or **DOWN** button until **Trip 1** is highlighted. Press the **SET** button to open the submenu.

Information on **Trip 1** can be viewed in the **Trip 1** submenu.

Note

Trip displays the distance since the last reset, e.g. between two refueling stops. **Trip** runs along and counts to **9999**.

Trip Time shows the riding time on the basis of **Trip** and runs as soon as a speed signal is received.

ØConsump. indicates the average fuel consumption based on **Trip**.

ØSpeed indicates the average speed based on **Trip** and **Trip Time**.

Press **Reset Trip** to reset all entries in the **Trip 1** menu.

7.22.3.2 Trip 2

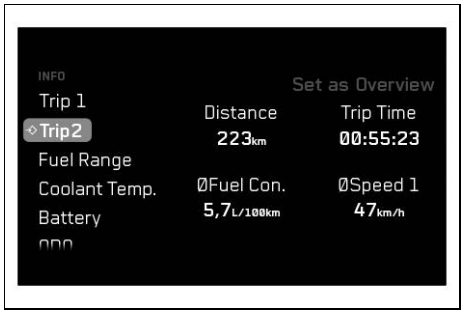

- Press the **SET** button when the menu is closed.
- Press the **UP** or **DOWN** button until **Bike Info** is highlighted.
- Pressing the **SET** button opens the menu.
- Press the **UP** or **DOWN** button until **Trip 2** is highlighted. Press the **SET** button to open the submenu.

Information on **Trip 2** can be viewed in the **Trip 2** submenu.

Note

Trip displays the distance since the last reset, e.g. between two refueling stops. **Trip** runs along and counts to **9999**.

Trip Time shows the riding time on the basis of **Trip** and runs as soon as a speed signal is received.

ØConsump. indicates the average fuel consumption based on **Trip**.

ØSpeed indicates the average speed based on **Trip** and **Trip Time**.

Press **Reset Trip** to reset all entries in the **Trip 2** menu.

7.22.3.3 Bike info

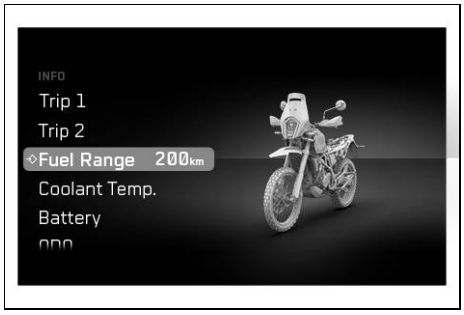

- Press the **SET** button when the menu is closed.
- Press the **UP** or **DOWN** button until **Bike Info** is highlighted.
- Pressing the **SET** button opens the menu.
- Press the **UP** or **DOWN** button until the desired information is highlighted.

Water displays the coolant temperature.

Fuel Range indicates the possible fuel range you can cover with the fuel reserve.

Battery displays the battery voltage.

Odometer displays the total mileage.

Date and Time displays the time and the date.

Service displays when the next service is due.

Warnings displays warnings that have occurred until they are no longer active.

7.22.3.4 Warning

Condition: Message or warning is present

- Press the **SET** button when the menu is closed.
- Press the **UP** or **DOWN** button until **Bike Info** is highlighted.
- Pressing the **SET** button opens the menu.
- Press the **UP** or **DOWN** button until **Warning** is highlighted. Press the **SET** button to open the submenu.
- Use the **UP** or **DOWN** button to navigate through the warnings.

Note

The warnings that have occurred are saved in the display until they are no longer active.

7.22.4 Cruise control (optional)

– Press the **SET** button when the menu is closed.
– Press the **UP** or **DOWN** button until cruise control is highlighted. Pressing the **SET** button opens the menu.

Cruise control (optional) can be activated and deactivated in the cruise control menu (optional).

7.22.4.1 Cruise control State (optional)

– Press the **SET** button when the menu is closed.
– Press the **UP** or **DOWN** button until cruise control is highlighted. Pressing the **SET** button opens the menu.
– Press the **UP** or **DOWN** button until **State** is highlighted. Press the **SET** button to open the submenu.
– Activate the menu item using the **UP** or **DOWN** button.
– Switch cruise control (optional) on or off by pressing the **SET** button.

7.22.5 Navigation (optional)

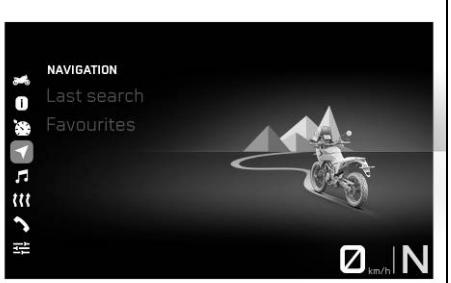

Condition: Function **Bluetooth®** activated, The **KTMconnect** app (optional) is installed and connected on a suitable cell phone (Android devices from version 7.0, iOS devices from version 14), The combination instrument is connected to a suitable cell phone, GPS function is activated on the connected cell phone, For voice navigation: The combination instrument is connected to a suitable communication system and an appropriate language package has been downloaded in the **KTMconnect Navigation** app (optional).

– Press the **SET** button when the menu is closed.
– Press the **UP** or **DOWN** button until **Navigation** is marked. Pressing the **SET** button opens the menu.

7.22.5.1 Volume (optional)

Condition: The **KTMconnect** app (optional) is installed and connected on a suitable cell phone (Android devices from version 7.0, iOS devices from version 14), The combination instrument is connected to a suitable cell phone, For voice navigation: The combination instrument is connected to a suitable communication system and an appropriate language package has been downloaded in the **KTMconnect** app (optional).

– Press the **SET** button when the menu is closed.
– Press the **UP** or **DOWN** button until **Navigation** is marked. Pressing the **SET** button opens the menu.

WARNING

Danger of accidents Headphone volume which is too high distracts attention from traffic activity.

– Always select headphone volume which is low enough for you to still clearly hear acoustic signals.

– Press the **UP** or **DOWN** button until **Volume** is marked. Press the **SET** button to open the submenu.
– Press the **UP** button to increase the volume of the activated voice navigation.
– Press the **DOWN** button to reduce the volume of the activated voice navigation.

7.22.5.2 State (optional)

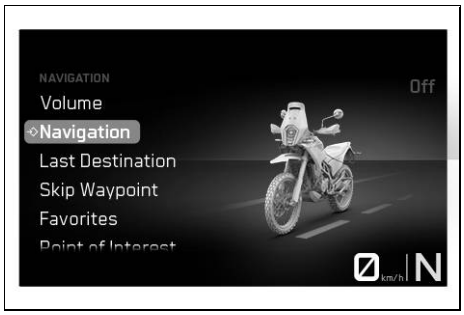

Condition: Function **Bluetooth®** activated, The **KTMconnect** app (optional) is installed and opened on a suitable cell phone (Android devices from version 7.0, iOS devices from version 14), The combination instrument is connected to a suitable cell phone

– Press the **SET** button when the menu is closed.
– Press the **UP** or **DOWN** button until **Navigation** is marked. Pressing the **SET** button opens the menu.
– Press the **UP** or **DOWN** button until **State** is marked. Press the **SET** button to confirm the selection.
– Press the **SET** button to switch the visual navigation on or off.

Note

Voice navigation remains switched on if it has been activated.

The volume of the activated voice navigation is identical to the volume of the audio player on the cell phone. If the volume on the cell phone is changed, the volume of the activated voice navigation also changes.

7.22.5.3 Last search (optional)

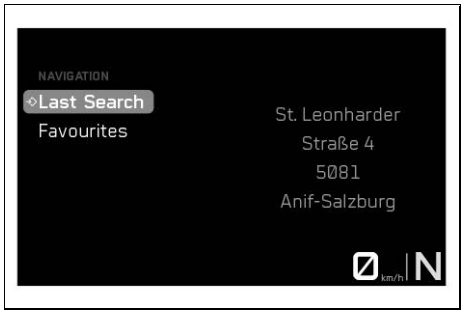

Condition: Function **Bluetooth®** activated, The **KTMconnect** app (optional) is installed and opened on a suitable cell phone (Android devices from version 7.0, iOS devices from version 13), The combination instrument is connected to a suitable cell phone, GPS function is activated on the connected cell phone

– Press the **SET** button when the menu is closed.
– Press the **UP** or **DOWN** button until **Navigation** is marked. Pressing the **SET** button opens the menu.
– Press the **UP** or **DOWN** button until **Last Search** is marked. Press the **SET** button to open the submenu.
– Press the **UP** or **DOWN** button to select an address.
– Press the **SET** button to confirm the selection and start navigation.

Note
The last 10 addresses searched for in the **Last Search** app (optional) are saved in **KTMconnect**.

7.22.5.4 Skip Waypoint (optional)

Condition: Function **Bluetooth®** activated, The **KTMconnect** app (optional) is installed and opened on a suitable cell phone, The combination instrument is connected to a suitable cell phone, GPS function is activated on the connected cell phone, Navigation with at least one interim destination has been started in the **KTMconnect** app (optional)

- Press the **SET** button when the menu is closed.
- Press the **UP** or **DOWN** button until **Navigation** is marked. Pressing the **SET** button opens the menu.
- Press the **UP** or **DOWN** button until **Skip Waypoint** is marked. Press the **SET** button to select the waypoint.
- Press the **SET** button again to confirm the selection and the waypoint is removed.

7.22.5.5 Favorites (optional)

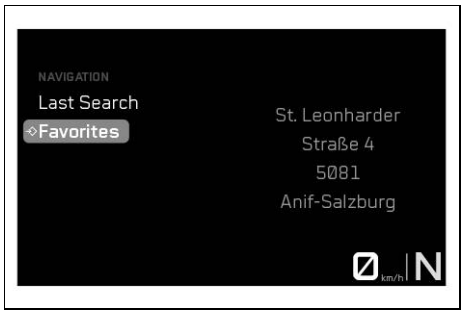

Condition: Function **Bluetooth®** activated, The **KTMconnect** app (optional) is installed and opened on a suitable cell phone (Android devices from version 7.0, iOS devices from version 13), The combination instrument is connected to a suitable cell phone, GPS function is activated on the connected cell phone, Favorites are saved in the **KTMconnect** app (optional)

- Press the **SET** button when the menu is closed.
- Press the **UP** or **DOWN** button until **Navigation** is marked. Pressing the **SET** button opens the menu.
- Press the **UP** or **DOWN** button until **Favorites** is marked. Press the **SET** button to open the submenu.
- Press the **UP** or **DOWN** button to select an address.
- Press the **SET** button to confirm the selection and start navigation.

Note
10 addresses in the **Favorites** app (optional) can be stored in **KTMconnect**.

7.22.5.6 Points of Interest

Condition: Function **Bluetooth®** activated, The **KTMconnect** app (optional) is installed and opened on a suitable cell phone (Android devices from version 7.0, iOS devices from version 14), The combination instrument is connected to a suitable cell phone

- Press the **SET** button when the menu is closed.
- Press the **UP** or **DOWN** button until **Navigation** is marked. Pressing the **SET** button opens the menu.
- Press the **UP** or **DOWN** button until **Points of Interest** is marked. Press the **SET** button to open the submenu.
- Press the **UP** or **DOWN** button to select an address.
- Press the **SET** button to confirm the selection and start navigation.

Note

Places of particular interest can be selected in **Points of Interest**.

The number of **Points of Interest** can be adjusted in the app.

7.22.5.7 Stop Navigation (optional)

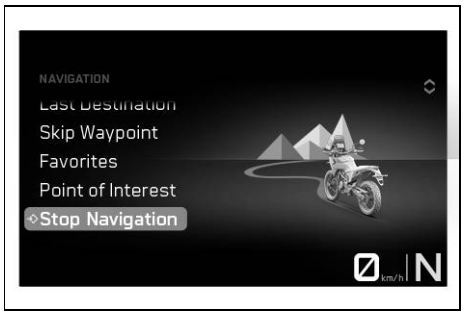

Condition: Function **Bluetooth®** activated, The **KTMconnect** app (optional) is installed and opened on a suitable cell phone (Android devices from version 7.0, iOS devices from version 13), The combination instrument is connected to a suitable cell phone

- Press the **SET** button when the menu is closed.
- Press the **UP** or **DOWN** button until **Navigation** is marked. Pressing the **SET** button opens the menu.
- Press the **UP** or **DOWN** button until **Stop Navigation** is marked. Press the **SET** button to confirm the selection.
- Press the **SET** button again to confirm the selection and end navigation.

7.22.6 audio

Condition: Function **Bluetooth®** activated, The combination instrument is connected to a suitable cell phone, The combination instrument is connected to a suitable communication system or the **Headset Type Corded** is selected

- Press the **SET** button when the menu is closed.

WARNING

Danger of accidents Headphone volume which is too high distracts attention from traffic activity.

- Always select headphone volume which is low enough for you to still clearly hear acoustic signals.

- Press the **UP** or **DOWN** button until **Audio** is highlighted. Press the **SET** button to open the menu.
- Press and hold **UP** button to increase the audio volume.
- Press and hold **DOWN** button to reduce the audio volume.
- Press **UP** button briefly to change to the next audio track.
- Briefly pressing the **DOWN** button once or twice replays the current audio track from the start or changes to the previous audio track, depending on the cell phone model.
- Press **SET** button to play or pause the audio track.

Note

With some cell phones, the cell phone audio player needs to be started before playback is possible.

The audio function can be added to **Quick Selector 1** or **Quick Selector 2** for easier operation.

7.22.7 Heating (optional)

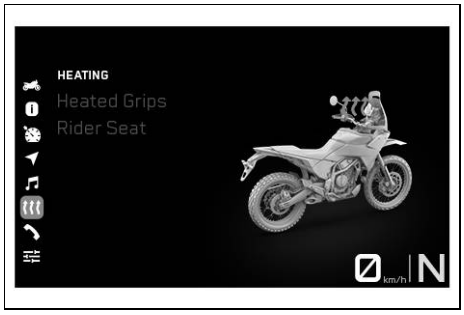

– Press the **SET** button when the menu is closed.
– Press the **UP** or **DOWN** button until **Heating** (optional) is highlighted. Pressing the **SET** button opens the menu.

Heated Grips (optional) can be activated and deactivated in menu **Heating** (optional).

7.22.7.1 Heated Grips (optional)

Condition: Model with grip heater

– Press the **SET** button when the menu is closed.
– Press the **UP** or **DOWN** button until **Heating** is highlighted. Press the **SET** button to open the menu.
– Press the **UP** or **DOWN** button until **Heated Grips** is marked. Press the **SET** button to open the submenu.
– Activate the menu item using the **UP** or **DOWN** button.
– Press the **SET** button to switch the heated grip on or off.

7.22.7.2 Seat Heating Rider (optional)

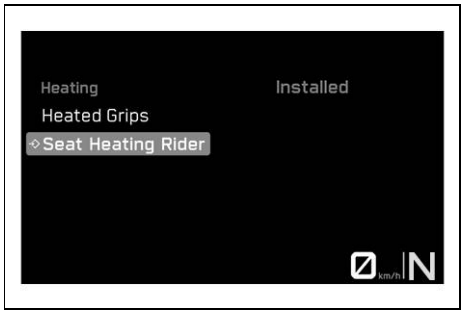

Condition: Model with seat heater.

– Press the **SET** button when the menu is closed.
– Press the **UP** or **DOWN** button until **Heating** is highlighted. Press the **SET** button to open the menu.
– Press the **UP** or **DOWN** button until **Seat Heating Rider** is marked. Press the **SET** button to open the submenu.
– Activate the menu item using the **UP** or **DOWN** button.
– Press the **SET** button to switch the front rider's seat heating on or off.

7.22.8 call

Condition: Function **Bluetooth®** activated, The combination instrument is connected to a suitable cell phone, Dashboard is connected to a suitable communication system

– Press the **SET** button when the menu is closed.

WARNING

Danger of accidents Headphone volume which is too high distracts attention from traffic activity.

– Always select headphone volume which is low enough for you to still clearly hear acoustic signals.

– Press the **UP** or **DOWN** button until **Call** is highlighted. Pressing the **SET** button opens the menu.
  ✓ Press the **SET** button to accept an incoming call.
  ✓ Press the **BACK** button to reject an incoming call.
  ✓ Press and hold **UP** button to increase the audio volume.

✓ Press and hold **DOWN** button to reduce the audio volume.

The last calls and favorites can be called up in the **Call** menu.

Note

It is not possible to change the audio volume using the combination switch with every cell phone.

The call duration and contact are displayed. Depending on the cell phone settings, the contact is shown by name.

Accessing contacts must be enabled on the cell phone.

An incoming call is shown in a small window at the top of the combination instrument display when the navigation function is active.

You cannot navigate in the menu during an active phone conversation.

7.22.8.1 Last Calls

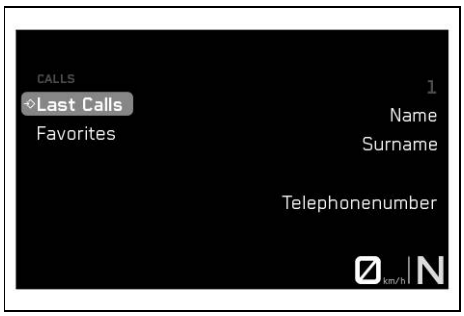

Condition: Function **Bluetooth®** activated, Dashboard is connected to a suitable cell phone, Dashboard is connected to a suitable communication system

- Press the **SET** button when the menu is closed.
- Press the **UP** or **DOWN** button until **Call** is highlighted. Press **SET** button to open the menu.
- Press the **UP** or **DOWN** button until **Last Calls** is highlighted. Press the **SET** button to open the submenu.
- Press the **UP** or **DOWN** button until the desired person is marked. This person can be called by pressing the **SET** button.

7.22.8.2 favorites

Condition: Function **Bluetooth®** activated, Dashboard is connected to a suitable cell phone, Dashboard is connected to a suitable communication system

- Press the **SET** button when the menu is closed.
- Press the **UP** or **DOWN** button until **Call** is highlighted. Press **SET** button to open the menu.
- Press the **UP** or **DOWN** button until **Favorites** is highlighted. Press the **SET** button to open the submenu.
- Press the **UP** or **DOWN** button until the desired person is marked. This person can be called by pressing the **SET** button.

7.22.9 Settings

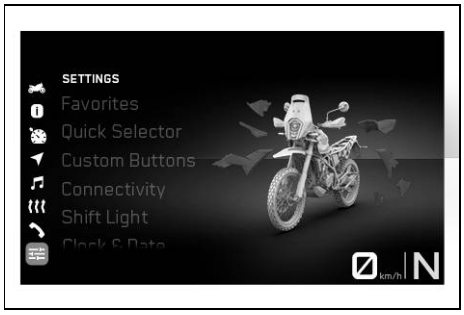

Condition: Motorcycle is stationary

- Press the **SET** button when the menu is closed.
- Press the **UP** or **DOWN** button until **Settings** is highlighted. Pressing the **SET** button opens the menu.

In the **Settings** menu, favorites, quick selections, **Connectivity** (optional), and the shift warning light can be configured. Settings can be made for units or various values. Several functions can be enabled or disabled.

7.22.9.1 favorites

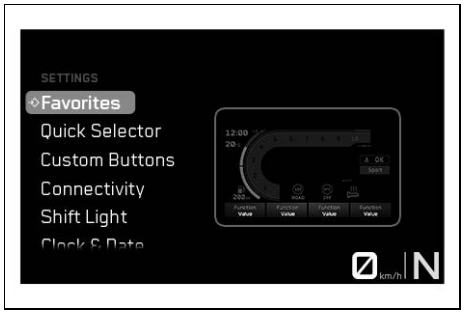

Condition: Motorcycle is stationary

- Press the **SET** button when the menu is closed.
- Press the **UP** or **DOWN** button until **Settings** is highlighted.
- Press the **SET** button to open the menu.
- Press the **UP** or **DOWN** button until “Favorites” is highlighted. Press the **SET** button to open the submenu.
- Access menu item with the **UP** or **DOWN** button, and add the selected information to the Favorites display using the **SET** button.

Up to four sets of information can be selected in the **Favorites** menu.

7.22.9.2 Favorites–display 1–4

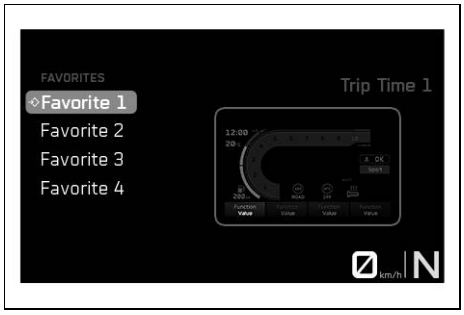

Condition: Motorcycle is stationary

- Press the **SET** button when the menu is closed.
- Press the **UP** or **DOWN** button until **Settings** is highlighted.
- Press the **SET** button to open the menu.
- Press the **UP** or **DOWN** button until **Favorites** is highlighted. Press the **SET** button to open the submenu.
- Press the **UP** or **DOWN** button to select **Favorite 1**, **Favorite 2**, **Favorite 3**, or **Favorite 4**. Press the **SET** button to open the submenu.
- Press the **UP** or **DOWN** button to select the desired information. Press the **SET** button to confirm the selection.

7.22.9.3 Quick selector 1

Condition: Motorcycle is stationary

- Press the **SET** button when the menu is closed.
- Press the **UP** or **DOWN** button until **Settings** is highlighted.
- Press the **SET** button to open the menu.
- Press the **UP** or **DOWN** button until **Quick Selector 1** is highlighted. Press the **SET** button to open the submenu.
- Activate the menu item using the **UP** or **DOWN** button.
- Press the **SET** button to set a direct selection submenu for **Quick Selector 1**.

Note

When the menu is closed, the submenu defined in **UP** is opened by pressing the **Quick Selector 1** button.

7.22.9.4 Quick selector 2

Condition: Motorcycle is stationary

- Press the **SET** button when the menu is closed.
- Press the **UP** or **DOWN** button until **Settings** is highlighted.
- Press the **SET** button to open the menu.
- Press the **UP** or **DOWN** button until **Quick Selector 2** is highlighted. Press the **SET** button to open the submenu.
- Activate the menu item using the **UP** or **DOWN** button.
- Press the **SET** button to set a direct selection submenu for **Quick Selector 2**.

Note
When the menu is closed, the submenu defined in **DOWN** is opened by pressing the **Quick Selector 2** button.

7.22.9.5 Custom Switch

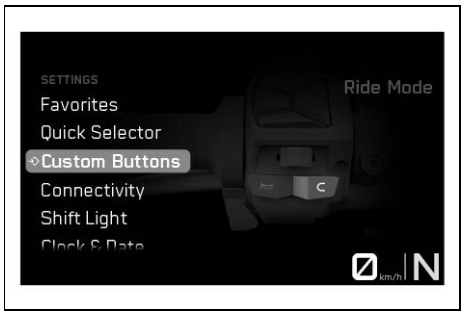

Condition: Motorcycle is stationary

- Press the **SET** button when the menu is closed.
- Press the **UP** or **DOWN** button until **Settings** is highlighted.
- Press the **SET** button to open the menu.
- Press the **UP** or **DOWN** button until **Custom Switch** is highlighted. Press the **SET** button to open the submenu.
- Activate the menu item using the **UP** or **DOWN** button.
- Press the **SET** button to set a direct selection submenu for **Custom Switch**.

Note
When the menu is closed, the submenu defined in **C** is opened by pressing the **Custom Switch** button.

7.22.9.6 connectivity

Condition: Motorcycle is stationary, Function **Bluetooth®** activated

- Press the **SET** button when the menu is closed.
- Press the **UP** or **DOWN** button until **Settings** is highlighted.
- Press the **SET** button to open the menu.
- Press the **UP** or **DOWN** button until **Connectivity** is highlighted. Press the **SET** button to open the submenu.

A suitable cell phone or communication system can be paired with the combination instrument via **Bluetooth®** in menu **Connectivity** and the audio function and navigation function can be configured.

Note
Not every cell phone and communication system is suitable for pairing with the combination instrument.
The standard **Bluetooth®** 4.0 must be supported.

7.22.9.7 Bluetooth

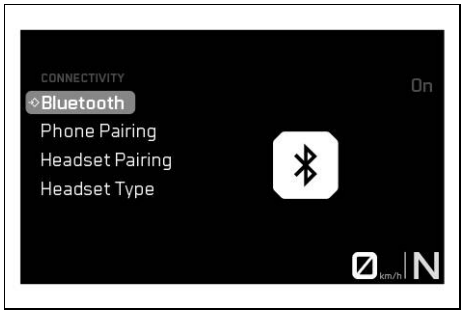

Condition: Motorcycle is stationary

- Press the **SET** button when the menu is closed.
- Press the **UP** or **DOWN** button until **Settings** is highlighted.
- Press the **SET** button to open the menu.
- Press the **UP** or **DOWN** button until **Connectivity** is highlighted. Press the **SET** button to open the submenu.
- Press the **UP** or **DOWN** button until **Bluetooth** is highlighted. Press the **SET** button to open the submenu.
- Activate the menu item using the **UP** or **DOWN** button.
- Press the **SET** button to switch the **Bluetooth®** function on or off.

Note

The function **Bluetooth®** must be activated to pair a suitable cell phone or communication system with the vehicle.

Not every cell phone and communication system is suitable for pairing with the combination instrument.

7.22.9.8 Phone Pairing

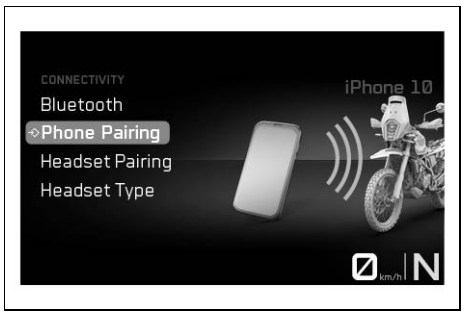

Condition: Motorcycle is stationary, Function **Bluetooth®** activated, Function **Bluetooth®** also activated on the device that is to be paired

- Press the **SET** button when the menu is closed.
- Press the **UP** or **DOWN** button until **Settings** is highlighted.
- Press the **SET** button to open the menu.
- Press the **UP** or **DOWN** button until **Connectivity** is highlighted. Press the **SET** button to open the submenu.
- Press the **UP** or **DOWN** button until “Pair phone” is highlighted. Press the **SET** button to open the submenu.

Note

Only one cell phone can be paired with the vehicle at a time.

- Press the **UP** or **DOWN** button until **New Pairing** is marked. Press the **SET** button to open the submenu.
- The vehicle starts the search for a suitable cell phone. If the search is successful, the name of the cell phone is displayed again in the pairing submenu. Press the **SET** button to start the pairing.

Note

The cell phone must be visible via **Bluetooth®** in order for the cell phone to be found by the vehicle.

Not every cell phone is suitable for pairing with the vehicle.

- A message appears on the combination instrument indicating that the vehicle is now ready for pairing. The pairing is successfully completed by confirming the **Passkey** on the cell phone and on the combination instrument.

Note
Follow the instructions in the app when connecting with **KTMconnect**. Confirmation may be required on the combination instrument.

– Press the **UP** or **DOWN** button until **Delete Pairing** is highlighted. The paired device can be deleted by pressing the **SET** button.
– Move the previously paired device into the range of the vehicle while the **Bluetooth®** function is active.
  ✓ The device is automatically connected with the vehicle.
  ✗ If the device is not automatically connected with the vehicle after approx. 30 seconds:
    – Switch on the vehicle again or repeat the **New Pairing** procedure.

In submenu **Phone Pairing**, a suitable cell phone can be paired with the combination instrument via **Bluetooth®**.

Note
Not every cell phone and communication system is suitable for pairing with the combination instrument.
Make sure the end device is in the correct pairing mode for call management. If the end device is only paired for media playback, the call function may not work.

7.22.9.9 headset pairing

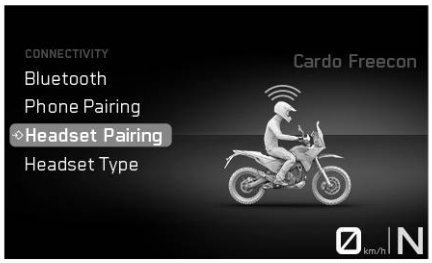

Condition: Motorcycle is stationary, Function **Bluetooth®** activated, Function **Bluetooth®** also activated on the device that is to be paired

– Press the **SET** button when the menu is closed.
– Press the **UP** or **DOWN** button until **Settings** is highlighted.
– Press the **SET** button to open the menu.
– Press the **UP** or **DOWN** button until **Connectivity** is highlighted. Press the **SET** button to open the submenu.
– Press the **UP** or **DOWN** button until **Headset Pairing** is highlighted. Press the **SET** button to open the submenu.
– Press the **UP** or **DOWN** button until **New Pairing** is marked. Press the **SET** button to open the submenu.
– The vehicle starts searching for a suitable communication system. If the search was successful, the name of the rider's headset is displayed in the **New Pairing** submenu. Press the **SET** button to start the pairing.

Note
The communication system must be in pairing mode for the communication system to be found by the vehicle. Follow the instructions in the communication system owner's manual.
Press the **UP** or **DOWN** button until **Delete Pairing** is highlighted. The paired device can be deleted by pressing the **SET** button.
Not every communication system is suitable for pairing with the vehicle.

– Move the previously paired device into the range of the vehicle while the **Bluetooth®** function is active.
  ✓ The device is automatically connected with the vehicle.

✗ If the device is not automatically connected with the vehicle after approx. 30 seconds:
  – Switch on the vehicle again or repeat the **New Pairing** procedure.

In the **Headset Pairing** submenu, a suitable rider communication system can be paired with the vehicle.

7.22.9.10 Type of audio device

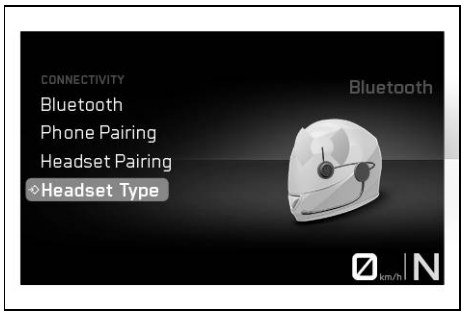

Condition: Motorcycle is stationary

– Press the **SET** button when the menu is closed.
– Press the **UP** or **DOWN** button until **Settings** is highlighted.
– Press the **SET** button to open the menu.
– Press the **UP** or **DOWN** button until **Connectivity** is highlighted. Press the **SET** button to open the submenu.
– Press the **UP** or **DOWN** button until **Headset Type** is highlighted.
– Activate the menu item using the **UP** or **DOWN** button.
– Press the **SET** button to change the rider headset type.

The connection type of the rider headset can be selected in the **Headset Type** submenu.

The communication system is connected to the vehicle wirelessly via **Bluetooth Headset** in **Bluetooth®** display mode.

The communication system is connected directly to the smartphone in display mode **Corded Headset**.

Note

The **Riders Headset** menu item is only available in **Headset Type Bluetooth**.

7.22.9.11 Shift Light

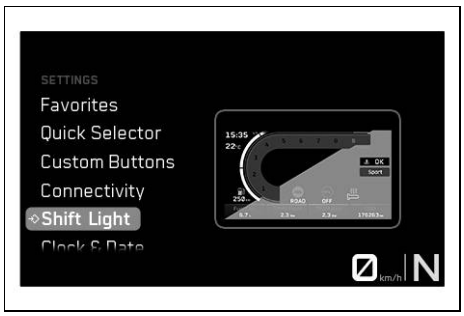

Condition: Motorcycle is stationary, **ODO** > 1000 km (621 mi)

– Press the **SET** button when the menu is closed.
– Press the **UP** or **DOWN** button until **Settings** is highlighted.
– Press the **SET** button to open the menu.
– Press the **UP** or **DOWN** button until **Shift Light** is highlighted. Press the **SET** button to open the submenu.

The shift warning light can be configured in the **Shift Light** submenu.

7.22.9.12 Shift light state

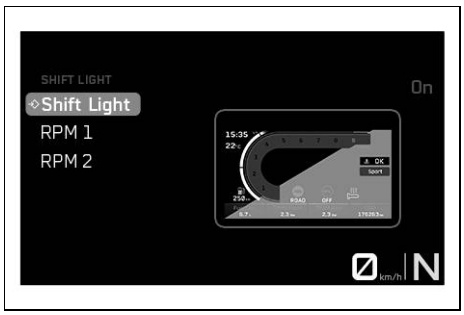

Condition: Motorcycle is stationary, **ODO** > 1000 km (621 mi)

– Press the **SET** button when the menu is closed.
– Press the **UP** or **DOWN** button until **Settings** is highlighted.
– Press the **SET** button to open the menu.
– Press the **UP** or **DOWN** button until **Shift Light** is highlighted. Press the **SET** button to open the submenu.
– Press the **UP** or **DOWN** button until **State** is highlighted. Press the **SET** button to open the submenu.
– Activate the menu item using the **UP** or **DOWN** button.
– Press the **SET** button to switch the shift warning light on or off.

7.22.9.13 RPM1

Condition: Motorcycle is stationary, **ODO** > 1000 km (621 mi)

- Press the **SET** button when the menu is closed.
- Press the **UP** or **DOWN** button until **Settings** is highlighted.
- Press the **SET** button to open the menu.
- Press the **UP** or **DOWN** button until **Shift Light** is highlighted. Press the **SET** button to open the submenu.
- Press the **UP** or **DOWN** button until **RPM1** is highlighted. Press the **SET** button to open the submenu.
- Activate the menu item using the **UP** or **DOWN** button.
- Set the value for **SET** by pressing the **RPM1** button.

RPM1 must not be larger than **RPM2**.

Note

RPM1 can be set in intervals of 500 between 5,500 and 10,000 rpm.

If the engine speed reaches the set value **RPM1**, the shift warning light flashes.

7.22.9.14 RPM2

Condition: Motorcycle is stationary, **ODO** > 1000 km (621 mi)

- Press the **SET** button when the menu is closed.
- Press the **UP** or **DOWN** button until **Settings** is highlighted.
- Press the **SET** button to open the menu.
- Press the **UP** or **DOWN** button until **Shift Light** is highlighted. Press the **SET** button to open the submenu.
- Press the **UP** or **DOWN** button until **RPM2** is highlighted. Press the **SET** button to open the submenu.
- Activate the menu item using the **UP** or **DOWN** button.
- Set the value for **SET** by pressing the **RPM2** button.

RPM2 must not be smaller than **RPM1**.

Note

RPM2 can be set in intervals of 500 between 7,000 and 10,000 rpm.

If the engine speed reaches the set value **RPM2**, the shift warning light flashes and the color changes.

7.22.9.15 Setting the time and date

Condition: Motorcycle is stationary

I01396-01

- Press the **SET** button when the menu is closed.
- Press the **UP** or **DOWN** button until **Settings** appears. Pressing the **SET** button opens the menu.
- Press the **UP** or **DOWN** button until **Clock & Date** is highlighted. Press the **SET** button to open the submenu.

I01397-01

Setting the clock

- Press the **UP** or **DOWN** button until **Set Clock** is marked.
- Press the **SET** button to open the submenu.
- Press the **UP** or **DOWN** button until the hour is set. Press the **SET** button to select the hour.
- Press the **UP** or **DOWN** button until the minute is set. Press the **SET** button to select the minute.
- Press the **BACK** button to exit the sub-menu.

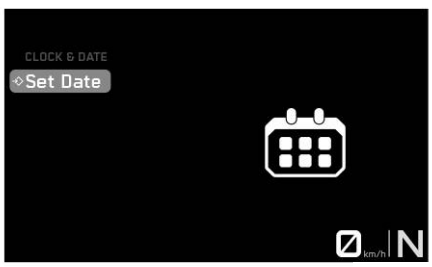

I01398-01

Setting the date

- Press the **UP** or **DOWN** button until **Set Date** is marked.
- Press the **SET** button to open the submenu.
- Press the **UP** or **DOWN** button until the day is set. Press the **SET** button to select the day.
- Press the **UP** or **DOWN** button until the month is set. Press the **SET** button to select the month.
- Press the **UP** or **DOWN** button until the year is set. Press the **SET** button to select the year.
- Press the **BACK** button to exit the submenu.

7.22.9.16 Clock format

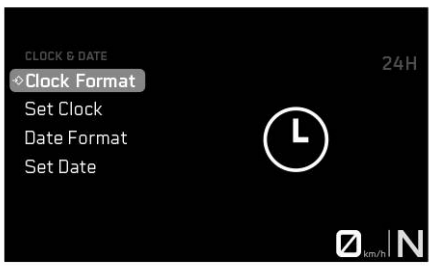

Condition: Motorcycle is stationary

- Press the **SET** button when the menu is closed.
- Press the **UP** or **DOWN** button until **Settings** is highlighted.
- Press the **SET** button to open the menu.
- Press the **UP** or **DOWN** button until **Clock Format** is highlighted. Press the **SET** button to open the submenu.
- Activate the menu item using the **UP** or **DOWN** button.
- Press the **SET** button to select the time format.

Note
The possible settings are 24h and 12h.

7.22.9.17 Date format

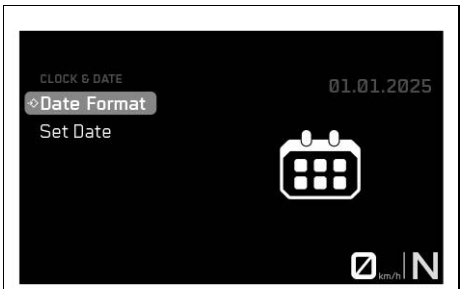

Condition: Motorcycle is stationary

- Press the **SET** button when the menu is closed.
- Press the **UP** or **DOWN** button until **Settings** is highlighted.
- Press the **SET** button to open the menu.
- Press the **UP** or **DOWN** button until **Date Format** is highlighted. Press the **SET** button to open the submenu.
- Activate the menu item using the **UP** or **DOWN** button.
- Press the **SET** button to select the date format.

Note
The possible settings are DD.MM.YYYY, MM.DD.YYYY and YYYY.MM.DD.

7.22.9.18 Units

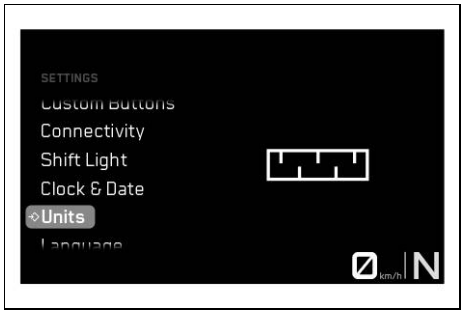

Condition: Motorcycle is stationary

- Press the **SET** button when the menu is closed.
- Press the **UP** or **DOWN** button until **Settings** is highlighted.
- Press the **SET** button to open the menu.
- Press the **UP** or **DOWN** button until **Units** is highlighted. Press the **SET** button to open the submenu.

The **Units** submenu allows settings to be made for units or various values.

7.22.9.19 Distance

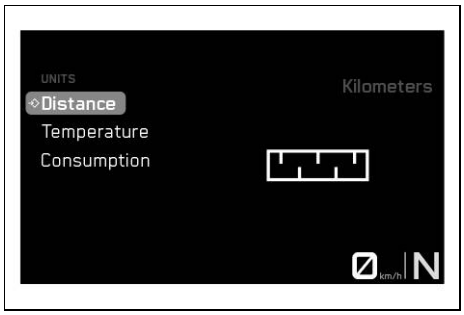

Condition: Motorcycle is stationary

- Press the **SET** button when the menu is closed.
- Press the **UP** or **DOWN** button until **Settings** is highlighted.
- Press the **SET** button to open the menu.
- Press the **UP** or **DOWN** button until **Units** is highlighted. Press the **SET** button to open the submenu.
- Press the **UP** or **DOWN** button until **Distance** is marked. Press the **SET** button to open the submenu.
- Activate the menu item using the **UP** or **DOWN** button.
- Press the **SET** button to confirm the desired unit.

Note
Kilometers and miles can be set.

7.22.9.20 Temperature

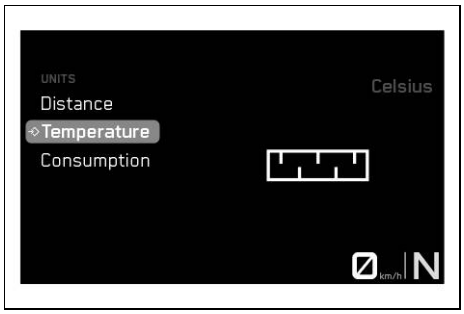

Condition: Motorcycle is stationary

- Press the **SET** button when the menu is closed.
- Press the **UP** or **DOWN** button until **Settings** is highlighted.
- Press the **SET** button to open the menu.
- Press the **UP** or **DOWN** button until **Units** is highlighted. Press the **SET** button to open the submenu.
- Press the **UP** or **DOWN** button until **Temperature** is marked. Press the **SET** button to open the submenu.
- Activate the menu item using the **UP** or **DOWN** button.
- Press the **SET** button to confirm the desired unit.

Note
Celsius and Fahrenheit can be set.

7.22.9.21 Consumption

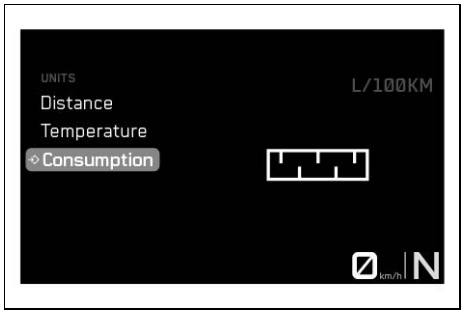

Condition: Motorcycle is stationary

- Press the **SET** button when the menu is closed.
- Press the **UP** or **DOWN** button until **Settings** is highlighted.
- Press the **SET** button to open the menu.
- Press the **UP** or **DOWN** button until **Units** is highlighted. Press the **SET** button to open the submenu.
- Press the **UP** or **DOWN** button until **Consumption** is marked. Press the **SET** button to open the submenu.
- Activate the menu item using the **UP** or **DOWN** button.
- Press the **SET** button to confirm the desired unit.

Note
The following can be set: l/100 km, km/l, USG/100 mi, mi/USG, malfunction indicator light, UKG/100 mi and mi/UKG.

7.22.9.22 Language

Condition: Motorcycle is stationary

- Press the **SET** button when the menu is closed.
- Press the **UP** or **DOWN** button until **Settings** is highlighted.
- Press the **SET** button to open the menu.
- Press the **UP** or **DOWN** button until **Language** is highlighted. Press the **SET** button to open the submenu.
- Activate the menu item using the **UP** or **DOWN** button.
- Press the **SET** button to confirm the desired language.

Note
The menu languages are US English, UK English, German, Italian, French, and Spanish.

7.22.9.23 Heating (optional)

Condition: Motorcycle is stationary

- Press the **SET** button when the menu is closed.
- Press the **UP** or **DOWN** button until **Settings** is highlighted.
- Press the **SET** button to open the menu.
- Press the **UP** or **DOWN** button until **Heating** is highlighted. Press the **SET** button to open the submenu.

The heated grip can be configured in the **Heating** submenu.

Note
In menu **Settings** , submenu **Heating** solely controls the visibility of **Heated Grips** and **Seat Heating** in the menu.

7.22.9.24 Extra Functions

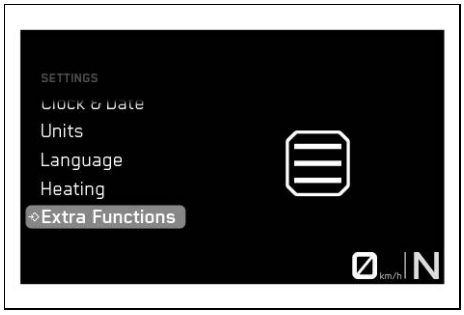

Condition: Motorcycle is stationary, Motorcycle with optional supplementary function

- Press the **SET** button when the menu is closed.
- Press the **UP** or **DOWN** button until **Settings** is highlighted.
- Press the **SET** button to open the menu.
- Press the **UP** or **DOWN** button until **Extra Functions** is highlighted. Press the **SET** button to open the submenu.
- Use the **UP** or **DOWN** button to navigate through the extra functions.

Note

The optional extra functions are listed.

The current **KTM PowerParts** and available software are listed on the KTM website.

8.1 Handlebar position

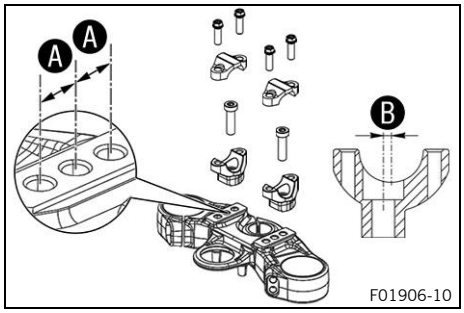

On the upper triple clamp, there are three holes at a distance of Ⓐ to each other.

The holes on the handlebar support are placed at a distance of Ⓑ from the center.

Hole distance Ⓐ	15 mm (0.59 in)
Hole distance Ⓑ	3.5 mm (0.138 in)

The handlebar can be mounted in six different positions. This allows the handlebar to be mounted in the most comfortable position for the rider.

8.2 Adjusting the handlebar position

WARNING

Danger of accidents A repaired handlebar poses a safety risk.

If the handlebar is bent or straightened, the material becomes fatigued. The handlebar may break as a result.

– Change the handlebar if the handlebar is damaged or bent.

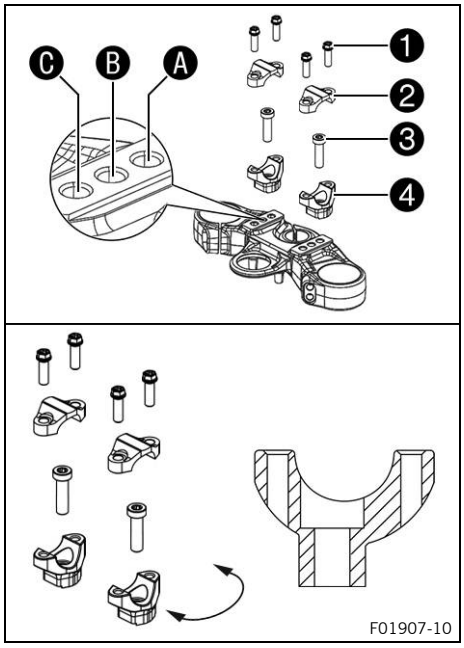

– Remove ❶ screws. Take off the handlebar clamps ❷. Position the handlebar so that screws ❸ are accessible.

Protect the components against damage by covering them.
Do not kink the cables or lines.

– Remove ❸ screws. Take off handlebar supports ❹.

– Move the handlebar supports into the desired position Ⓑ, Ⓐ or Ⓒ. Mount and tighten screws ❸.

Mount the left and right handlebar supports in the same position.

Screw, handlebar mount	
M10	45 Nm (33.2 ft·lb$_f$)

– Position the handlebar.

Make sure the cables and wiring are positioned correctly.

– Position the handlebar clamp. Mount screws ❶ and tighten evenly.

Handlebar clamp screw	
M8	20 Nm (14.8 ft·lb$_f$)

– Position the handlebar clamp. Mount screws ❶ and tighten evenly.

Handlebar clamp screw	
M8	20 Nm (14.8 ft·lb_f)

8.3 Adjusting the basic position of the hand brake lever

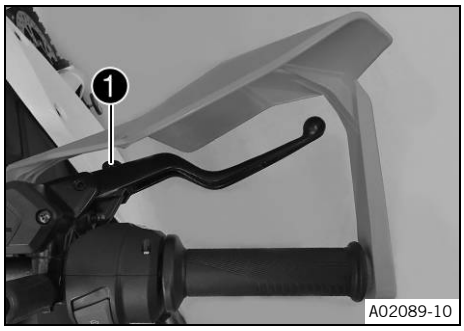

– Push the hand brake lever forward and turn setting wheel ❶.
– Adjust the basic position of the hand brake lever to your hand size by turning adjusting wheel ❶.

Only turn the adjusting screw by hand, and do not use force.
Do not make any adjustments while riding.

8.4 Adjusting the basic position of the clutch lever

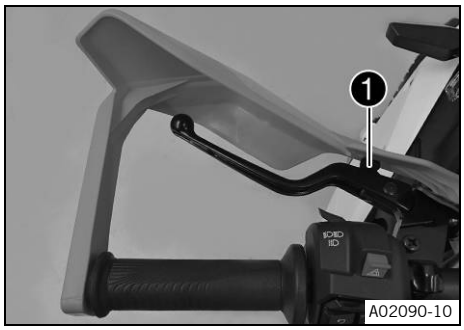

– Push the clutch lever forward and turn setting wheel ❶.
– Adjust the basic position of the clutch lever to your hand size by turning adjusting wheel ❶.

Only turn the adjusting screw by hand, and do not use force.
Do not make any adjustments while riding.

8.5 Adjusting foot brake lever stub

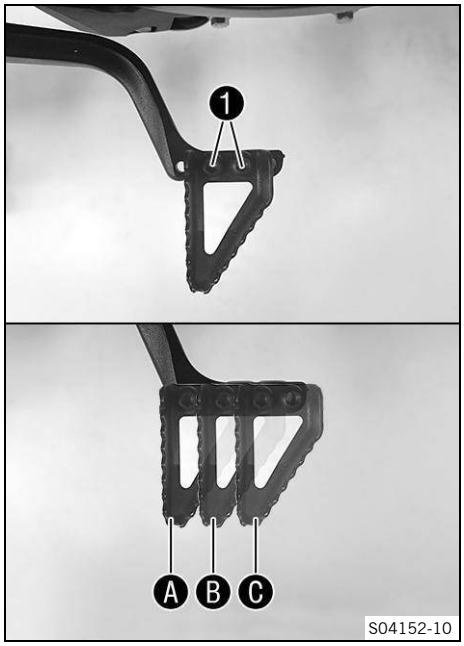

– Remove screws ❶ with the foot brake lever stub.
– Move the foot brake lever stub into desired position Ⓐ, Ⓑ or Ⓒ. Mount and tighten screws ❶.

Remaining screws on chassis	
M5	5 Nm (3.7 ft·lb$_f$)

8.6 Adjusting the shift lever

Note
The adjustment range of the shift lever is limited.

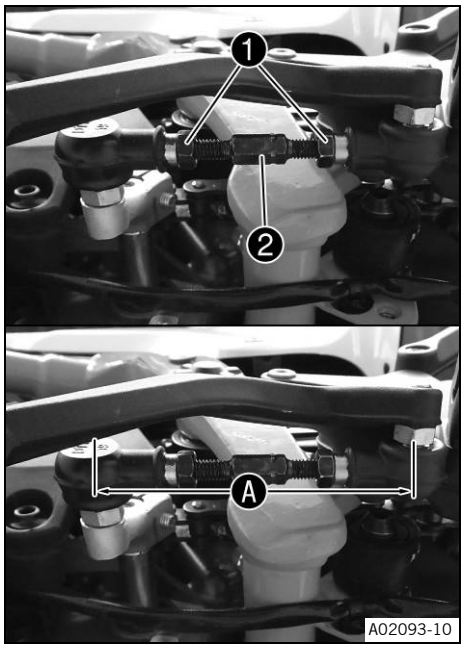

– Loosen nuts ❶.
– Adjust the shift lever by turning shift rod ❷.

Shift rod adjustment range Ⓐ	83 mm … 85 mm (3.27 in … 3.35 in)
Make equal adjustments on both sides.	

– Tighten nuts ❶.

Nut, shift rod	
M6	6 Nm (4.4 ft·lb$_f$)

After the nuts have been tightened, the bearings of the shift rod must be central and aligned identically to each other in order to ensure freedom of movement in the bearing shells.

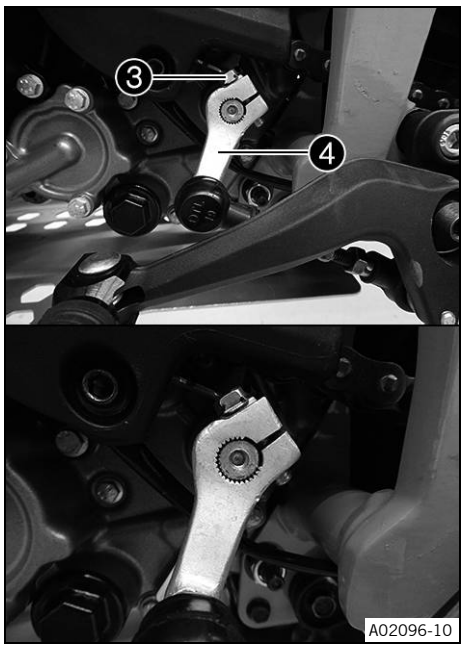

– Loosen screw ❸.
– Mount bell crank shift lever ❹ on the shift shaft in the required position and engage the gearing.

Note
The basic position of the marking on the shift shaft and the shift bell crank is offset by two teeth.

– Tighten screw ❸.

Screw, bell crank shift lever	
M6	16 Nm (11.8 ft·lb_f)

– Check the shift lever to ensure it is functioning properly and can move freely.

9.1 Notes on preparing for first use

DANGER
Danger of accidents A rider who is not fit to ride poses a danger to themself and to others.
– Do not operate the vehicle if you are not fit to ride due to alcohol, drugs, or medication.
– Do not operate the vehicle if you are physically or mentally incapable of doing so.

WARNING
Danger of accidents The brake system fails in the event of overheating.
If the brake pedal is not released, the brake pads grind continuously.
– Take your foot off the brake pedal when you are not braking.

WARNING
Danger of accidents Non-approved or non-recommended tyres and wheels impact the handling characteristic.
– Only use tires and wheels approved and recommended by the vehicle manufacturer with the corresponding speed rating.

WARNING
Danger of accidents New tires have reduced road grip.
The contact surface on new tires is not yet roughened.
– Run in new tires with moderate riding and only gradually increase the lean angle.

Run-in distance	200 km (124.3 mi)

WARNING
Danger of accidents Different tire profiles on the front and rear wheels can make it more difficult to control the vehicle.
– Make sure that only tires of the same tread type are mounted to the front and rear wheel.

WARNING
Risk of injury Missing or inadequate protective clothing increases the risk of injury.
– Wear appropriate protective clothing such as helmet, boots, gloves as well as pants and a jacket with protectors on all rides.
– Always wear protective clothing that is in good condition and meets the legal regulations.

Note
When using the vehicle, remember that others may feel disturbed by excessive noise.

– Ensure that the pre–delivery inspection has been carried out by an authorized contractual partner.
  ✓ The delivery certificate is transferred upon vehicle handover.
– Read the entire owner's manual before riding for the first time.
– Get to know the controls.
– Adjust the basic position of the clutch lever. (p. 64)
– Adjust the basic position of the hand brake lever. (p. 64)
– Get used to the handling characteristics of the motorcycle on suitable terrain before undertaking a more challenging ride. Also, ride as slowly as possible to get a better feeling for the motorcycle.
– Hold the handlebar firmly with both hands and keep your feet on the footpegs when riding.
– Run in the engine. (p. 68)

9.2 Running in the engine

– During the running-in time, do not exceed the specified engine speed.

Maximum engine speed	
During the first: 1,000 km (621.4 mi)	7,500 rpm (125.00 Hz)

Avoid fully opening the throttle.

Note
During the running-in phase, the shift warning light is set to a specified value and cannot be changed.

9.3 Loading the vehicle

WARNING
Fire hazard The hot exhaust system may burn luggage.
– Fasten your luggage in such a way that it cannot be burned or singed by the hot exhaust system.

WARNING
Danger of accidents A high payload alters the handling characteristic and increases the stopping distance.
– Adapt your speed to your payload.

WARNING
Danger of accidents Carrying luggage alters handling characteristics.
– Adapt your speed to your payload.
– Ride more slowly if your vehicle is loaded with cases or other luggage.

Maximum speed with luggage	130 km/h (80.8 mph)

WARNING
Danger of accidents Items of luggage that have slipped or are incorrectly fastened can obscure the lighting system.
– Check that your luggage is fixed properly at regular intervals.
– Make sure that the lighting system is not covered by luggage.

WARNING
Danger of accidents Total weight and axle loads influence the handling characteristic.
The total weight consists of: operational vehicle with a full tank, rider and, if applicable, a passenger with protective clothing and helmet, and, if applicable, mounted luggage.
– Do not exceed the maximum permissible total weight or the axle loads.

WARNING
Danger of accidents Improper mounting of cases, tank rucksacks or other luggage impairs the handling characteristics.
Luggage mounted incorrectly can slip while the vehicle is in motion.
– Mount and secure all luggage according to the manufacturer's instructions.
– Check that your luggage is fixed properly at regular intervals.

WARNING

Danger of accidents The luggage system will be damaged if it is overloaded.

– Read the manufacturer information on maximum payload when mounting cases.

– If luggage is carried, ensure it is fixed firmly as close as possible to the center of the vehicle and ensure even weight distribution between the front and rear wheels.

The maximum permissible total weight and the maximum permissible axle loads must not be exceeded.	
Maximum permissible total weight	375 kg (826.7 lb)
Maximum permissible front axle load	115.9 kg (255.52 lb)
Maximum permissible rear axle load	259.1 kg (571.22 lb)

9.4 Preparing the vehicle for difficult operating conditions

Note

Use of the vehicle under difficult conditions, such as on sand, dust or on wet and muddy roads/terrain, can result in significantly increased wear of components, such as the powertrain, brake system, or suspension components. For this reason, it may be necessary to inspect or replace parts before the next scheduled service interval.

Note

In dusty conditions, it may be necessary to check and replace the air filter more frequently, possibly even daily.

– Check the connector for humidity and corrosion and to ensure it is firmly seated.
  » If moisture, corrosion, or damage is found:
    – Clean and dry the socket connector, or change it if necessary.

Difficult operating conditions are:

– Sand
– Dust
– Wet or muddy roads
– Temperatures above +40 °C
– Temperatures below -10 °C

10.1 Checks and maintenance measures when preparing for use

Note
Before every trip, check the condition of the vehicle and ensure that it is roadworthy.
The vehicle must be in perfect technical condition when it is being operated.

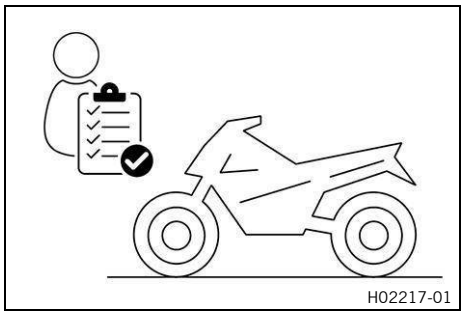

- Check the engine oil level. (p. 137)
- Check the brake fluid level for the front brake. (p. 104)
- Check the brake fluid level for the rear brake. (p. 106)
- Check that the brake pads of the front brake are secured. (p. 105)
- Check that the brake pads of the rear brake are secured. (p. 108)
- Check that the brake system is functioning properly.
- Check the coolant level. (p. 130)
- Check the chain for dirt. (p. 88)
- Check the chain tension. (p. 89)
- Check the tire condition. (p. 115)
- Check the tire pressure. (p. 116)
- Check the settings of all controls and ensure that they can be operated smoothly.
- Check that the electrical equipment is functioning properly.
- Check that luggage is properly secured.
- Sit on the motorcycle and check the rear mirror setting.
- Check the fuel level.
- In dusty operating conditions: Check the air filter box and air filter.

10.2 Starting

DANGER
Danger of poisoning Exhaust gases are toxic and inhaling them may result in unconsciousness and death.
- Always ensure that there is sufficient ventilation when running the engine.
- Use suitable exhaust extraction when starting or running the engine in an enclosed space.

WARNING
Danger of accidents Electronic components and safety devices will be damaged if the 12-V battery is discharged or missing.
If the 12-V battery is discharged or defective, malfunctions in the vehicle electronics can occur, especially when starting.
- Never operate the vehicle with a discharged 12-V battery or without a 12-V battery.

NOTE
Engine failure Unfiltered intake air has a negative effect on the service life of the engine.
Dust and dirt can enter the engine if there is no air filter or if the air filter is mounted incorrectly.
- Only operate the vehicle if an air filter is correctly fitted.

NOTE
Engine failure Running a cold engine at high engine speeds negatively impacts the service life of the engine.
- Always warm up the engine at low engine speeds.

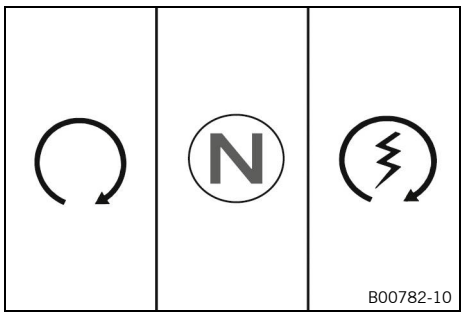

– Unlock steering. (p. 27)
– Sit on the vehicle, take the weight off of the side stand, and move it all the way up with your foot.
– Press the kill switch into position ◯.
– Switch on the ignition by turning the ignition key to position ◯.

To avoid malfunctions in the control unit communication, do not switch the ignition off and on in rapid succession.

✓ After you switch on the ignition, you can hear the fuel pump working for about two seconds. The function check of the combination instrument is run at the same time.

– Shift the transmission into the neutral position.
✓ The green idle indicator lamp **N** lights up.
✓ The **ABS** warning light lights up and goes out again after starting off.

– Briefly press start button ⚡.

Do not press the start button until the combination instrument function check has finished.
Do not open the throttle to start.
If the starting attempt is unsuccessful, wait for 15 seconds before making another attempt at starting.
After 6 unsuccessful starting attempts, do not try again, and check the vehicle for other malfunctions instead.

Note
This motorcycle is equipped with a safety starting system. You can only start the engine if the transmission is in neutral or if the clutch lever is pulled when a gear is engaged. If the side stand is folded out and you shift into gear and release the clutch lever, the engine stops.

10.3 Starting off

– Pull the clutch lever, shift into first gear, release the clutch lever slowly and at the same time carefully open the throttle.

Tip
If the engine dies while starting off, only pull the clutch lever and press the start button. The transmission must not be shifted into neutral.

10.4 Quickshifter+ (optional)

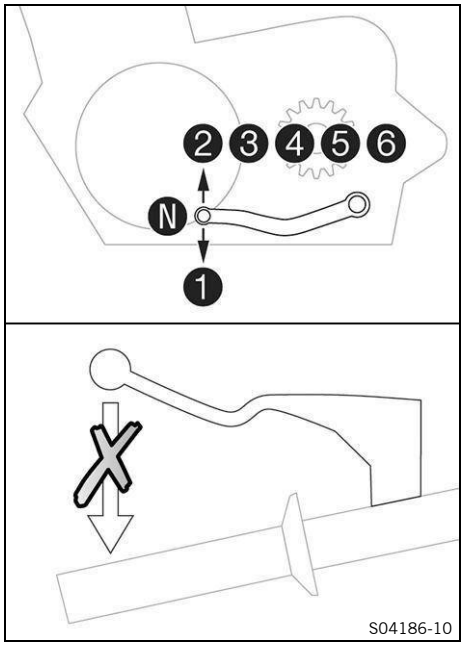

If the **QUICKSHIFTER+** is activated, you can shift up and down without actuating the clutch.

Because there is no need to close the throttle grip, uninterrupted gear shifts are possible.

The QUICKSHIFTER+ uses the shift shaft position to check whether or not a shift should be initiated, and sends a corresponding signal to the engine control unit.

If the QUICKSHIFTER+ is disabled in the combination instrument, the clutch needs to be actuated in the normal way for each shift.

10.5 Shifting, riding

WARNING

Risk of injury The passenger may fall from the vehicle if they act incorrectly.

– Ensure that the passenger sits correctly on the passenger seat, places his or her feet on the passenger foot pegs and holds on to the rider or the grab handles.

WARNING

Danger of accidents Not adapting the riding style constitutes a major risk.

– Comply with traffic regulations and ride defensively and with foresight to detect sources of danger as early as possible.

WARNING

Danger of accidents Total weight and axle loads influence the handling characteristic.

The total weight consists of: operational vehicle with a full tank, rider and, if applicable, a passenger with protective clothing and helmet, and, if applicable, mounted luggage.

– Do not exceed the maximum permissible total weight or the axle loads.

WARNING

Danger of accidents Improper mounting of cases, tank rucksacks or other luggage impairs the handling characteristics.

Luggage mounted incorrectly can slip while the vehicle is in motion.

– Mount and secure all luggage according to the manufacturer's instructions.
– Check that your luggage is fixed properly at regular intervals.

WARNING

Danger of accidents Adjustments to the vehicle distract attention from traffic activity.

– Make all adjustments when the vehicle is at a standstill.

WARNING
Danger of accidents Abrupt load alterations can cause the vehicle to become out of control.
– Avoid abrupt load alterations and sudden braking actions unless a hazardous situation arises.

WARNING
Danger of accidents Cold tires have reduced road grip.
– Ride the first miles carefully on every journey at moderate speed until the tires reach operating temperature.

WARNING
Danger of accidents New tires have reduced road grip.
The contact surface on new tires is not yet roughened.
– Run in new tires with moderate riding and only gradually increase the lean angle.

Run-in distance	200 km (124.3 mi)

WARNING
Danger of accidents A fall can damage the vehicle more seriously than it may first appear.
– Check the vehicle after a fall as you do when preparing for use.

WARNING
Danger of accidents An incorrect ignition key position causes malfunctions.
– Do not change the ignition key position while riding.

WARNING
Danger of accidents If you downshift at high engine speed, the rear wheel blocks and the engine races.
– Do not downshift to a lower gear at high engine speeds.

NOTE
Engine failure Overheating damages the engine.
– If the coolant temperature warning is displayed, stop immediately and take care not to endanger yourself or other traffic participants in the process.
– Allow the engine and cooling system to cool down.
– Check and, if necessary, correct the coolant level on the cooling system while it is in a cooled state.

NOTE
Engine failure Unfiltered intake air has a negative effect on the service life of the engine.
Dust and dirt can enter the engine if there is no air filter or if the air filter is mounted incorrectly.
– Only operate the vehicle if an air filter is correctly fitted.

NOTE
Transmission damage Incorrect use of the QUICKSHIFTER+ will damage the transmission.
The QUICKSHIFTER+ can only be used if the function is enabled in the combination instrument.
The QUICKSHIFTER+ is not active if you pull the clutch lever.
– Only use the QUICKSHIFTER+ in the permitted speed range shown.

Note
If you hear unusual noises while riding, stop immediately in a safe manner, switch off the engine, and contact an authorized contractual partner.

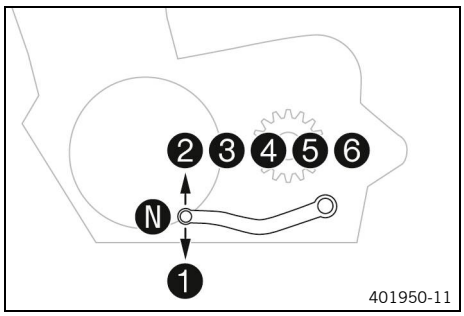

– Shift into a higher gear when conditions allow (incline, road situation, etc.).
– Release the throttle while simultaneously pulling the clutch lever, shift into the next gear, release the clutch lever, and open the throttle.

Note
The gear positions can be seen in the figure. The idle position is between the first and second gears. First gear is used for starting off or for steep inclines.

– After reaching maximum speed by fully opening the throttle twist grip, turn the throttle back so that it is ¾ open. This will reduce the speed slightly, but the fuel consumption will be considerably lower.
– Accelerate only up to a speed suitable for the road surface and weather conditions. In particular, you should not change gear on bends and should only accelerate very cautiously.
– Brake if necessary and close the throttle at the same time in order to shift down.
– Pull clutch lever and shift into a lower gear, release the clutch lever slowly, and open the throttle or shift again.
– Switch off the engine if you are likely to be running at idle speed or stationary for a long time.
– If the engine stalls (e.g. at an intersection), just pull the clutch lever and press the start button. The transmission must not be shifted into neutral.
– If the oil pressure warning lamp lights up during a trip, stop as soon as it is safe to do so and switch off the engine. Contact an authorized contractual partner.
– If the oil pressure warning light lights up during a trip, please contact an authorized contractual partner as soon as possible.
– If the general warning lamp lights up during a trip, an operating safety (warning) message was detected.

Note
All warnings which have occurred are displayed and stored in the **Warning** menu until these are no longer active.

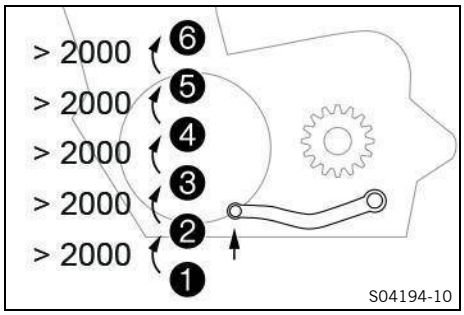

– If the **QUICKSHIFTER+** (optional) is activated in the combination instrument, you can shift up in the engine speed range indicated without pulling the clutch lever.

Pull the shift lever to the stop quickly without changing the throttle twist grip position.

Note
The minimum engine speed in rpm before shifting up is shown in the figure.

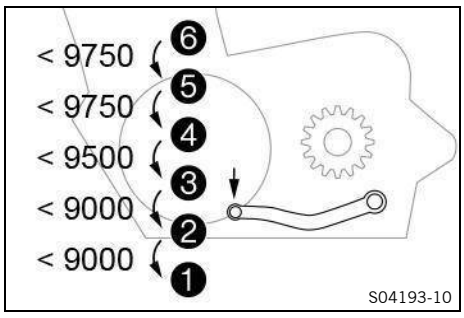

– If the QUICKSHIFTER+ (optional) is activated in the dashboard, you can shift down in the rev range indicated without pulling the clutch lever.

Press the shift lever to the stop quickly without changing the throttle twist grip position.

Note
The maximum engine speed in rpm before shifting down is shown in the figure.

10.6 Braking

WARNING
Danger of accidents A spongy pressure point on the front or rear brake reduces the brake action.
– Do not drive the vehicle if the brake system has a spongy pressure point.

WARNING
Danger of accidents The brake system fails in the event of overheating.
If the brake pedal is not released, the brake pads grind continuously.
– Take your foot off the brake pedal when you are not braking.

WARNING
Danger of accidents Braking with excessive force locks the wheels.
The ABS effectiveness is only ensured if it is switched on.
– Leave the ABS switched on in order to benefit from the protective effect.

WARNING
Danger of accidents Moisture and dirt impair the brake system.
– Brake carefully several times to dry out and remove dirt from the brake pads and the brake discs.

WARNING
Danger of accidents The rear wheel can lock due to the engine braking effect.
– Pull the clutch when performing emergency braking or braking on slippery surfaces.

WARNING
Danger of accidents Salt on the roads impairs the brake system.
– Brake carefully several times to remove salt from the brake linings and the brake discs.

WARNING
Danger of accidents ABS may increase the stopping distance in certain situations.
– Adapt your braking to the riding situation and the road conditions.

WARNING
Danger of accidents Higher total weight increases the stopping distance.
– Take the longer stopping distance into account when carrying a passenger or luggage with you.

WARNING
Danger of accidents ABS may increase the stopping distance in certain situations.
– Adapt your braking to the riding situation and the road conditions.

– When braking, release the throttle and apply the front and rear brakes at the same time.

Note
When the **ABS** is enabled, maximum braking power can be applied even on surfaces with low road grip such as sandy, wet, or slippery terrain without the danger of the wheels locking.

WARNING
Danger of accidents The rear wheel can lock due to the engine braking effect.
– Pull the clutch when performing emergency braking or braking on slippery surfaces.

WARNING
Danger of accidents Banked or laterally sloping ground reduces the maximum possible delay.
– If possible finish braking before going into a bend.

– Always finish braking before you go into a bend. Shift into a lower gear that suits the speed.
– Use the brake action of the engine on long downhill stretches. Shift down one or two gears, but do not overrev the engine when doing so. This means that significantly less braking is required and means the brake system does not overheat.

10.7 Stop, park

WARNING
Risk of injury People who act without authorization endanger themselves and others.
– Never leave the vehicle unattended while the engine is running.
– Lock the steering and remove the ignition key if you leave the vehicle unattended.

WARNING
Danger of burns Some vehicle components become hot when the vehicle is operated.
– Do not touch any parts such as the exhaust system, radiator, engine, damper, or brake system before the vehicle parts have cooled down.
– Allow the vehicle parts to cool down before performing any work on the vehicle.

NOTE
Fire hazard Hot vehicle components pose a fire hazard and explosion risk.
– Do not park the vehicle near materials which are highly flammable or explosive.
– Allow the vehicle to cool down before covering it.

NOTE
Material damage The vehicle may be damaged if parked incorrectly.
Damage can occur if the vehicle rolls away or falls over.
The components for parking the vehicle are designed only for the weight of the vehicle.
– Park the vehicle on a firm and level surface.
– Make sure that nobody sits on the vehicle when it is parked on a stand.

– Brake the motorcycle.
– Shift the transmission into the neutral position.
– Switch off the ignition by turning the ignition key to position ⊗.

Note
If the engine is switched off with the emergency OFF switch and the ignition remains switched on in the ignition lock, the power supply to most electrical power consumers remains uninterrupted and this discharges the 12-V battery. You should therefore always switch off the engine with the ignition lock – the kill switch is intended for emergencies only.

- Park the motorcycle on a firm surface.
- Swing side stand forward with your foot as far as it will go and lean the vehicle on it.
- Lock the steering. (p. 26)

10.8 Transport

NOTE
Fire hazard Hot vehicle components pose a fire hazard and explosion risk.
- Do not park the vehicle near materials which are highly flammable or explosive.
- Allow the vehicle to cool down before covering it.

NOTE
Material damage The vehicle may be damaged if parked incorrectly.
Damage can occur if the vehicle rolls away or falls over.
The components for parking the vehicle are designed only for the weight of the vehicle.
- Park the vehicle on a firm and level surface.
- Make sure that nobody sits on the vehicle when it is parked on a stand.

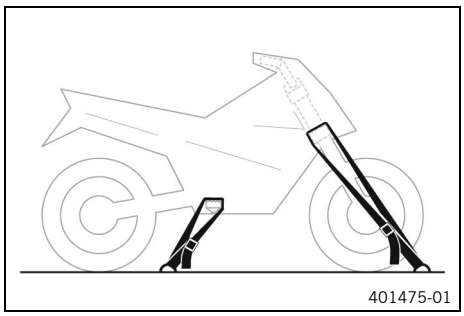

- Switch off the engine and remove the ignition key.
- Use tension belts or other suitable devices to secure the motorcycle against falling over or rolling away.

10.9 Towing in the event of a breakdown

NOTE
Danger of damage Damage to the powertrain and transmission can occur when towing with a towing vehicle.
- Do not use towing equipment where the wheels of the broken down vehicle remain on the road and rotate as it is towed.
- Always transport a broken down vehicle on a trailer or on the loading area of a transport vehicle.

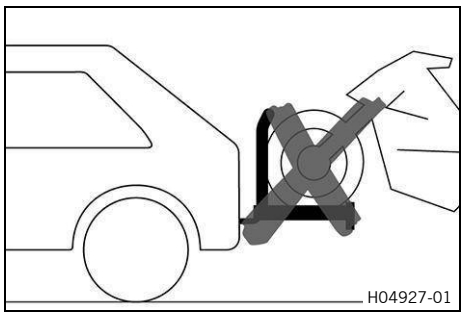

- Ensure that the broken down vehicle is properly secured on the trailer or transport vehicle.
- Observe local regulations for the recovery of broken down vehicles.

10.10 Refueling

DANGER

Fire hazard Fuel is highly flammable.

The fuel in the fuel tank expands when warm and can escape if overfilled.

- Do not refuel the vehicle in the vicinity of open flames, glowing, or smoldering objects.
- Make sure that nobody smokes in the vicinity of the vehicle during the refueling process.
- Switch off the engine for refueling.
- Make sure that no fuel is spilled; particularly not on hot parts of the vehicle.
- If any fuel is spilled, wipe it up immediately.
- Do not overfill the fuel tank.

WARNING

Danger of poisoning Fuel is harmful to health.

- Do not allow fuel to come into contact with skin, eyes, or clothing.
- Consult a doctor immediately if fuel has been ingested.
- Do not inhale fuel vapors.
- Rinse the affected area immediately with plenty of water in the event of contact with skin.
- Rinse eyes thoroughly with water and consult a doctor immediately if fuel comes into contact with eyes.
- If fuel spills on to your clothing, change the clothing.
- Store fuel properly in a suitable container and keep out of the reach of children.

NOTE

Material damage Inadequate fuel quality can lead to losses in performance and consequential damage.

- Refuel only with clean fuel that meets the specified standards.

NOTE

Environmental hazard Improper handling of fuel is dangerous to the environment.

- Do not allow fuel to enter the groundwater, the soil, or the sewage system.

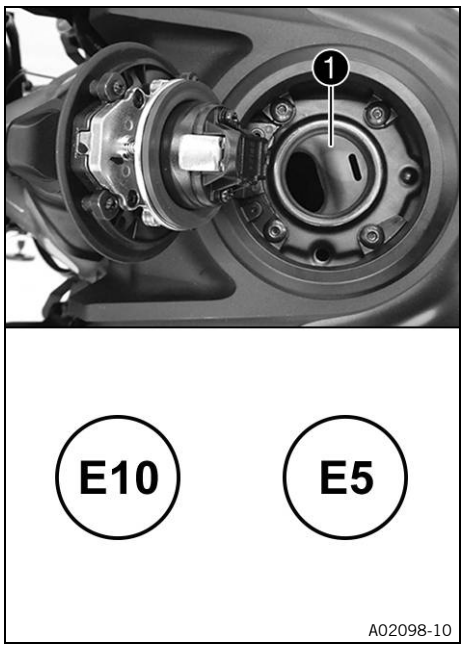

- Switch off the engine.
- Open the fuel tank cap. (p. 27)
- Fill the fuel tank with fuel up to the lower edge ❶ of the filler neck.

Total fuel tank capacity, approx.	
Super unleaded (ROZ 95) (p. 166)	14 l (3.7 liq. gal_{US})

- Close the fuel tank cap. (p. 28)

11.1 Service work

Any further work that results from the service work must be ordered separately and invoiced separately.

Different service intervals may apply in your country, depending on the local operating conditions.

Individual service intervals and scopes may change in the course of technical developments. The most up-to-date service schedule is available for authorized contractual partners for the electronic proof of service. Your authorized contractual partner will be happy to advise you.

* In dusty operating conditions: Check the air filter regularly and replace if necessary.

	after 1,000 km (621.4 mi)	every 10,000 km (6,213.7 mi)	every 20,000 km (12,427.4 mi)	Every 12 months	Every 24 months	Every 48 months
Read out the fault memory using the diagnostics tool.	○	●	●	●	●	●
Program the shift shaft sensor.	○	●	●			
Check that the electrical equipment is functioning properly.	○	●	●	●	●	●
Check that the brake pads of the front brake are secured. (p. 105)	○	●	●	●	●	●
Check that the brake pads of the rear brake are secured. (p. 108)	○	●	●	●	●	●
Check the brake discs. (p. 103)	○	●	●	●	●	●
Check the brake lines for damage and tightness.	○	●	●	●	●	●
Check the brake fluid level for the front brake. (p. 104)	○	●	●	●		
Change the brake fluid for the front brake.					●	●
Check the brake fluid level for the rear brake. (p. 106)	○	●	●	●		
Change the brake fluid for the rear brake.					●	●
Change the engine oil and the oil filter, clean the oil screens. (p. 137)	○	●	●	●	●	●
Check all hoses (e.g. fuel, cooling, bleeder, drainage, etc.) and boots for cracking, leaks, and correct routing.	○	●	●	●	●	●
Empty the drainage hoses.	○	●	●	●	●	●
Check the cables for damage and that there are no kinks in the routing.	○	●	●	●	●	●
Check the frame.			●			
Check the swingarm bearing for play.			●			
Check the swingarm bearing for play.		●	●			
Check the steering head bearing play.	○	●	●			
Check the wheel bearing for play.		●	●			
Check the shock absorber and fork for leaks.	○	●	●	●	●	●
Check the tire condition. (p. 115)	○	●	●	●	●	●
Check the tire pressure. (p. 116)	○	●	●	●	●	●
Check the rim run-out.	○	●	●			
Retighten the spokes.	○					
Check the spoke tension. (p. 117)		●	●			
Check the chain, rear sprocket, and engine sprocket. (p. 91)		●	●	●	●	●

						Every 48 months
					Every 24 months	
				Every 12 months		
			every 20,000 km (12,427.4 mi)			
		every 10,000 km (6,213.7 mi)				
	after 1,000 km (621.4 mi)					
Check the chain tension. (p. 89)	○	●	●	●	●	●
Grease all moving parts (e.g. side stand, hand lever, chain, etc.) and check for smooth operation.	○	●	●	●	●	●
Check that the clutch cables are undamaged, routed without kinks, and set correctly.	○	●	●	●	●	●
Check the valve clearance, change the spark plug.			●			
Change the air filter, clean the air filter box. *		●	●			
Check the headlight setting. (p. 126)	○	●	●			
Check the tightness of the safety-relevant screws and nuts which are easily accessible.	○	●	●	●	●	●
Clean the dust boots of the fork legs. (p. 87)		●	●			
Check that the radiator fan is functioning properly.	○	●	●	●	●	●
Check the coolant level. (p. 130)	○	●	●	●	●	
Checking the antifreeze.		●	●		●	
Change the coolant. (p. 133)						●
Final check: Check the vehicle is roadworthy and take a test ride.	○	●	●	●	●	●
Read out the fault memory after the test ride using the diagnostics tool.	○	●	●	●	●	●
Set the service interval display.	○	●	●	●	●	●
Enter the electronic proof of service in the contractual partner portal.	○	●	●	●	●	●

○ One-time interval
● Periodic interval

12.1 Fork/shock absorber

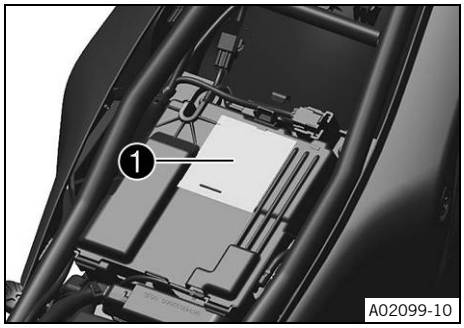

The fork and the shock absorber offer many options for adapting the chassis to the riding style and the payload.

Note
The recommendations for the suspension setting are shown in table ❶. The table is located on the battery cover and is covered by the seat when the motorcycle is ready to ride.

These adjustments should be understood as a guideline and should always be the basis for one's personal suspension setting. Do not change the adjustments at random, as otherwise the riding characteristics could deteriorate, particularly at high speeds.

12.2 Adjusting the compression damping of the fork

Note
The hydraulic compression damping determines the fork suspension behavior.

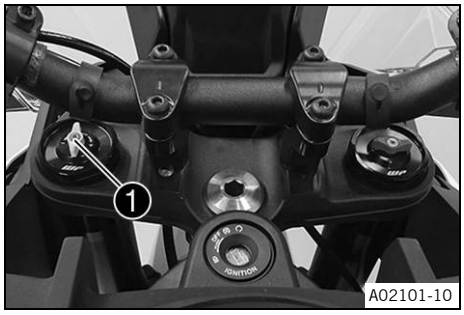

– Turn white adjusting screw ❶ clockwise as far as it will go.

Note
Adjuster ❶ **COMP** is located at the upper end of the left fork leg.

– Turn counterclockwise by the number of clicks corresponding to the fork type.

Compression damping	
Standard	15 clicks

Note
Turning clockwise increases damping; turning counter-clockwise reduces damping during compression.

12.3 Adjusting the rebound damping of the fork

Note
The hydraulic rebound damping determines the fork suspension behavior.

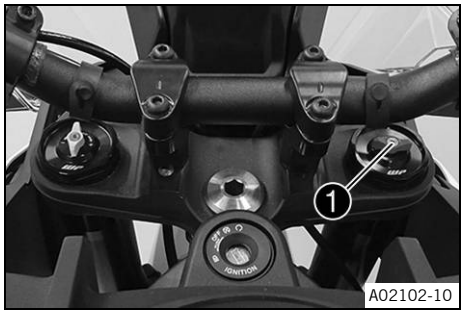

– Turn red adjusting screw ❶ clockwise as far as it will go.

Note
Adjuster ❶ **REB** is located at the upper end of the right fork leg.

– Turn counterclockwise by the number of clicks corresponding to the fork type.

Rebound damping	
Standard	15 clicks

Note
Turning clockwise increases damping; turning anticlockwise reduces damping on rebound.

12.4 Adjusting the spring preload of the shock absorber

WARNING
Danger of accidents Modifications to the suspension settings that are not properly coordinated can impair the handling and overload components.
– Only make adjustments within the recommended range.
– Ride slowly to start with after making adjustments to get the feel of the new handling characteristics.

Note
The spring preload defines the initial status of the spring operation on the shock absorber.
The best spring preload setting is achieved when it is set for the weight of the rider and that of any luggage and a passenger, thus ensuring an ideal compromise between handling and stability.

Preparatory work
– Remove the right side fairing. (p. 93)

Main work
– Adjust the spring preload by turning the adjusting ring ❶ using a suitable hook wrench.

Standard	8 mm (0.31 in)

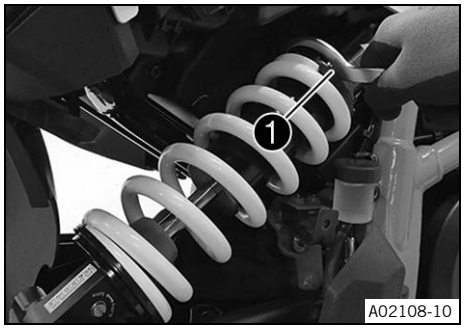

Reworking
– Install the right side cover. (p. 97)

12.5 Adjusting the rebound damping of the shock absorber

CAUTION
Risk of injury Parts of the shock absorber will move erratically if the shock absorber is detached incorrectly.
The shock absorber is filled with highly compressed nitrogen.
– Please follow the description provided.

– Turn adjusting screw ❶ clockwise up to the last perceptible click.
– Turn counterclockwise by the number of clicks corresponding to the shock absorber type.

Rebound damping	
Standard	15 clicks

Note
Turning clockwise increases damping; turning anticlockwise reduces damping on rebound.

13.1 Raising the motorcycle with rear lifting gear

NOTE

Material damage The vehicle may be damaged if parked incorrectly.
Damage can occur if the vehicle rolls away or falls over.
The components for parking the vehicle are designed only for the weight of the vehicle.
– Park the vehicle on a firm and level surface.
– Make sure that nobody sits on the vehicle when it is parked on a stand.

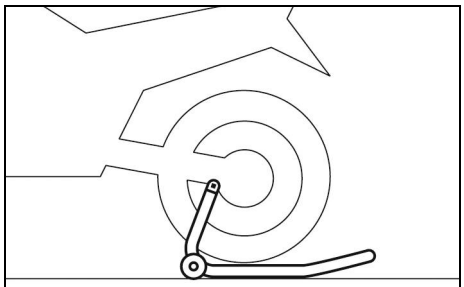

– Mount the supports of the lifting gear.
– Insert the adapter in the rear lifting gear.

Retaining adapter (61029955244)
Rear wheel work stand (69329955000)

– Stand the motorcycle upright, align the lifting gear with the link fork and the adapters, and raise the motorcycle.

13.2 Removing the rear of the motorcycle from the lifting gear

NOTE

Material damage The vehicle may be damaged if parked incorrectly.
Damage can occur if the vehicle rolls away or falls over.
The components for parking the vehicle are designed only for the weight of the vehicle.
– Park the vehicle on a firm and level surface.
– Make sure that nobody sits on the vehicle when it is parked on a stand.

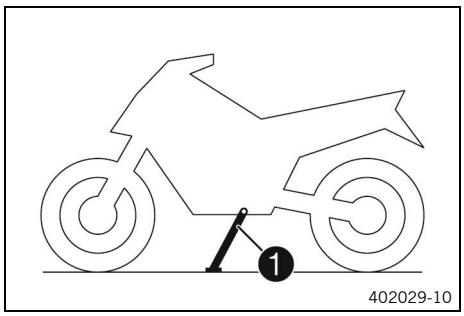

– Secure the motorcycle against falling over.
– Remove the rear lifting gear and lean the vehicle on side stand ❶.
– Remove bushings kit.

13.3 Lifting the motorcycle with the front lifting gear

NOTE

Material damage The vehicle may be damaged if parked incorrectly.
Damage can occur if the vehicle rolls away or falls over.
The components for parking the vehicle are designed only for the weight of the vehicle.
– Park the vehicle on a firm and level surface.
– Make sure that nobody sits on the vehicle when it is parked on a stand.

Preparatory work

– Raise the motorcycle with the rear lifting gear. (p. 85)
– Remove the front top fender. (p. 99)

Main work

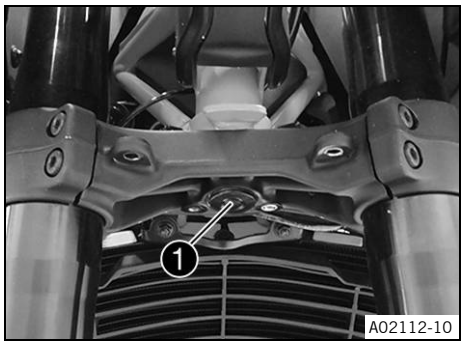

– Remove protection cap ❶.

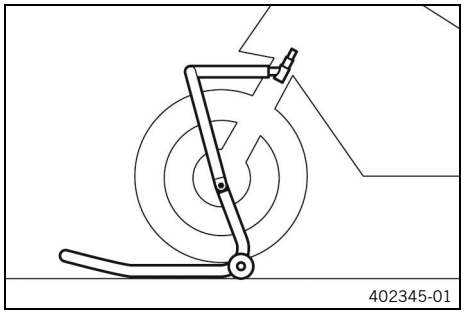

– Move the handlebar to the straight-ahead position.
– Use suitable lifting gear when attaching the steering stem.

Mounting pin (69329965030)
Front wheel work stand, large (69329965100)

– Align the front lifting gear with the fork legs.

Always raise the motorcycle at the rear first.

– Lift the motorcycle at the front.

13.4 Taking the motorcycle off the front lifting gear

NOTE

Material damage The vehicle may be damaged if parked incorrectly.
Damage can occur if the vehicle rolls away or falls over.
The components for parking the vehicle are designed only for the weight of the vehicle.
– Park the vehicle on a firm and level surface.
– Make sure that nobody sits on the vehicle when it is parked on a stand.

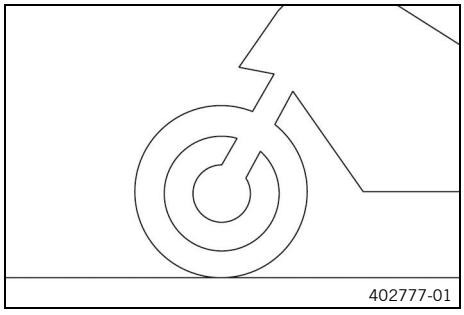

Main work

– Secure the motorcycle against falling over.
– Remove the front lifting gear.

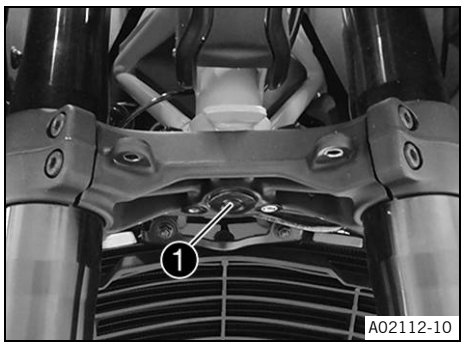

– Mount protection cap ❶.

Reworking

– Install the front top fender. (p. 99)
– Remove the rear of the motorcycle from the lifting gear. (p. 85)

13.5 Cleaning the dust boots of the fork legs

Preparatory work

– Raise the motorcycle with the rear lifting gear. (p. 85)
– Remove the front top fender. (p. 99)
– Lift the motorcycle with the front lifting gear. (p. 85)
– Remove the fork protector. (p. 100)

Main work

– Push dust boot ❶ downward on both fork legs.

Note
The dust boots should remove dust and coarse dirt particles from the inner fork tubes. Over time, dirt can accumulate behind the dust boots. If this dirt is not removed, the oil seals behind can start to leak.

WARNING
Danger of accidents Oil, grease or wax on the brake discs reduces the brake action.
– Always keep the brake discs free of oil, fat and wax.
– Clean the brake discs with brake cleaner when necessary.

– Clean and oil the dust boots and the inner fork tube of both fork legs.

Universal oil spray (p. 167)

– Press the dust boots back into their installation position.
– Remove excess oil.

Reworking

- Install the fork protector. (p. 100)
- Take the motorcycle off the front lifting gear. (p. 86)
- Install the front top fender. (p. 99)
- Remove the rear of the motorcycle from the lifting gear. (p. 85)

13.6 Removing the seat

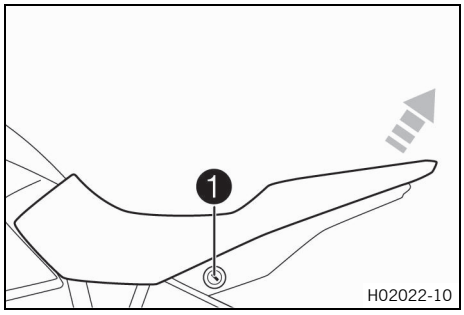

- Insert the ignition key in seat lock ❶ and turn it clockwise.
- Raise the rear of the seat, pull the seat back and lift it off.
- Remove the ignition key.

13.7 Mounting the seat

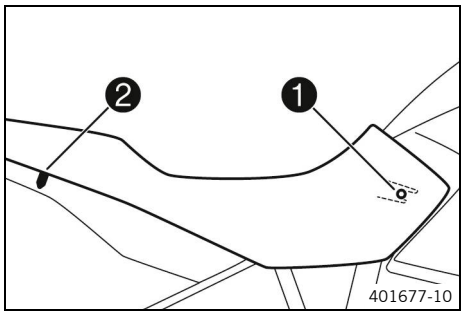

- Hook holding lug ❶ of the seat onto the fuel tank, lower the rear and push it forward.
- Insert locking pin ❷ into the lock housing and push down the rear of the seat until the locking pin engages with a click.
- Check that the seat is correctly mounted.

13.8 Checking the chain for dirt

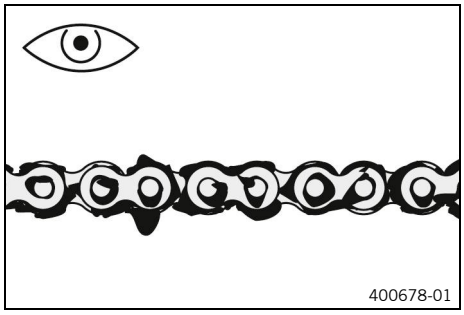

- Check the chain for coarse dirt accumulation.
  - » If the chain is very dirty:
    - Clean the chain. (p. 89)

13.9 Cleaning the chain

WARNING

Danger of accidents Oil, grease or wax on the brake discs reduces the brake action.

– Always keep the brake discs free of oil, fat and wax.
– Clean the brake discs with brake cleaner when necessary.

WARNING

Danger of accidents Lubricants on the tires reduces the road grip.

– Remove lubricants from the tires using a suitable cleaning agent.

NOTE

Environmental hazard Hazardous substances cause environmental damage.

– Dispose of oils, grease, filters, fuel, cleaning agents, brake fluid, etc. correctly and in accordance with the applicable regulations.

Note

The service life of the chain depends largely on its maintenance.

Preparatory work

– Raise the motorcycle with the rear lifting gear. (p. 85)

Main work

– Clean the chain regularly.
– Rinse off the loose dirt with a gentle jet of water.
– Remove grease residue with chain cleaner.

Chain cleaner (p. 169)

– After drying, apply chain spray.

Street chain spray (p. 167)

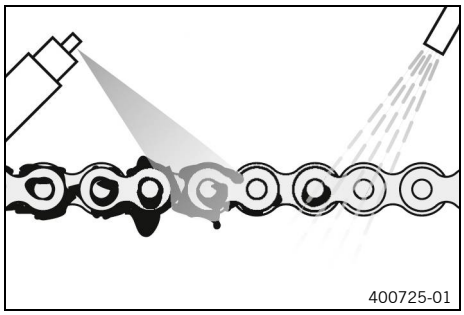

Reworking

– Remove the rear of the motorcycle from the lifting gear. (p. 85)

13.10 Checking the chain tension

WARNING

Danger of accidents Incorrect chain tension can damage components and result in an accident.

If the chain is tension is too high, the chain, front sprocket, rear sprocket, transmission, and rear wheel bearings wear more quickly. Some components may break if overloaded.

If the chain is too loose, the chain may fall off the front sprocket or the rear sprocket. This can damage the rear wheel or the engine.

– Check the chain tension regularly.
– Set the chain tension in accordance with the specification.

Preparatory work

– Raise the motorcycle with the rear lifting gear. (p. 85)

Main work

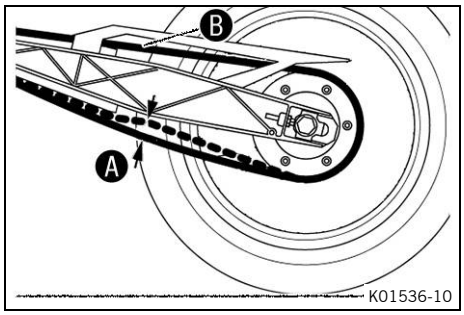

– Shift the transmission into the neutral position.
– In the area after the chain sliding guard, press the chain upward toward the link fork and measure chain tension A.

Chain tension	17 mm … 20 mm (0.67 in … 0.79 in)
The top part of chain B must be taut.	
Chain wear is not always even, so repeat this measurement at different positions on the chain.	

» If the chain tension does not meet the specification:
  – Adjust the chain tension. (p. 90)

Reworking

– Remove the rear of the motorcycle from the lifting gear. (p. 85)

13.11 Adjusting the chain tension

WARNING

Danger of accidents Incorrect chain tension can damage components and result in an accident.

If the chain is tension is too high, the chain, front sprocket, rear sprocket, transmission, and rear wheel bearings wear more quickly. Some components may break if overloaded.

If the chain is too loose, the chain may fall off the front sprocket or the rear sprocket. This can damage the rear wheel or the engine.

– Check the chain tension regularly.
– Set the chain tension in accordance with the specification.

Preparatory work

– Raise the motorcycle with the rear lifting gear. (p. 85)
– Check the chain tension. (p. 89)

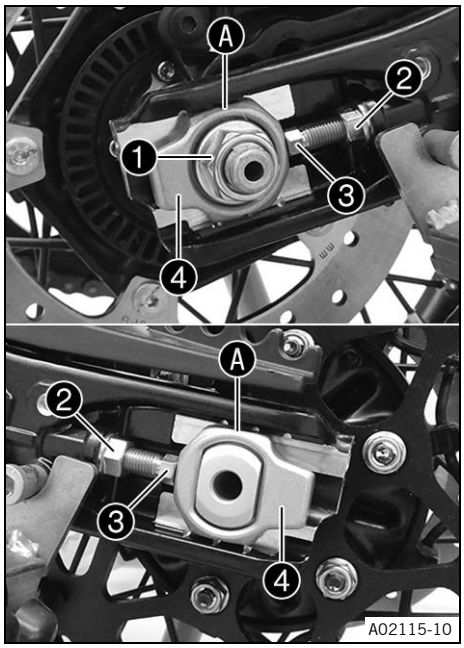

Main work

– Loosen nut ❶.
– Loosen nuts ❷.
– Adjust the chain tension by turning adjusting screws ❸ on the left and right.

Chain tension	17 mm … 20 mm (0.67 in … 0.79 in)
In order for the rear wheel to be correctly aligned, the markings on the left and right chain adjusters must be in the same position relative to reference markings Ⓐ.	
The upper part of the chain must be taut.	
Chain wear is not always even, so repeat this measurement at different positions on the chain.	

– Tighten nuts ❷.
– Make sure that chain tension adjusters ❹ are fitted correctly on adjusting screws ❸.
– Tighten nut ❶.

Nut, wheel spindle, rear	
M16	100 Nm (73.8 ft·lb_f)

– Grease the thread and contact surface of the wheel spindle.

Reworking

– Remove the rear of the motorcycle from the lifting gear. (p. 85)

13.12 Checking the chain, rear sprocket, and engine sprocket

Preparatory work

– Raise the motorcycle with the rear lifting gear. (p. 85)

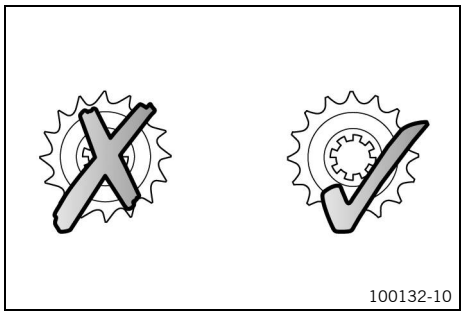

Main work

– Check the rear sprocket and the front sprocket for wear.
  » If the rear sprocket and engine sprocket are worn:
    – Change the drivetrain kit.

Always replace the front sprocket, rear sprocket, and chain together.

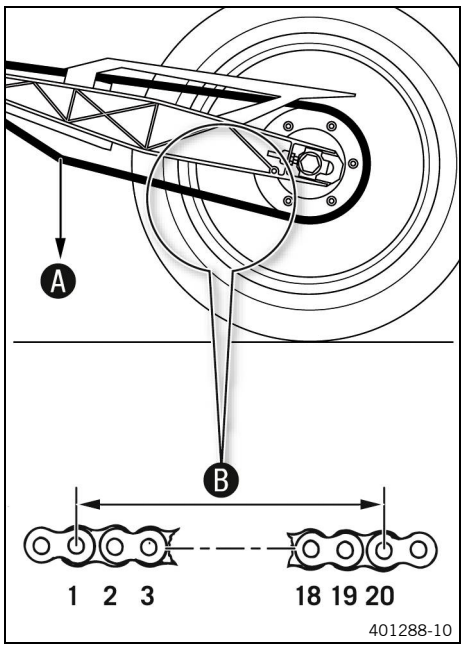

– Shift the transmission into the neutral position.
– Pull on the lower chain section with specified weight A.

Weight, chain wear measurement	15 kg (33.1 lb)

– Measure distance B of 20 chain rollers in the lower chain section.

Maximum distance B from 20 chain rollers at the longest chain section	301.6 mm (11.874 in)
Chain wear is not always even, so repeat this measurement at different positions on the chain.	

» If distance B is greater than the specified measurement:
  – Change the drivetrain kit.

When installing a new chain, also replace the rear sprocket and front sprocket.

Note
New chains wear out faster on old, worn sprockets.

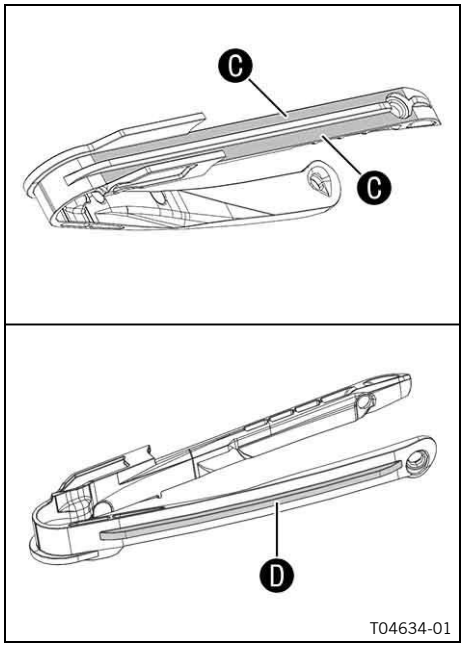

– Check the chain slider at the top for wear.
  » If continuous signs of wear to the chain are visible on the chain slider in the areas C marked:
    – Change the chain slider.
  » If the chain sliding guard is highly worn on the underside in the marked area D:
    – Change the chain slider.
– Check that the chain slider is firmly seated.
  » If the chain slider is loose:
    – Tighten the screw of the chain sliding guard.

Screw, chain guard	
M6	5 Nm (3.7 ft·lb$_f$)

Reworking

– Remove the rear of the motorcycle from the lifting gear.
(p. 85)

13.13 Removing the right side fairing

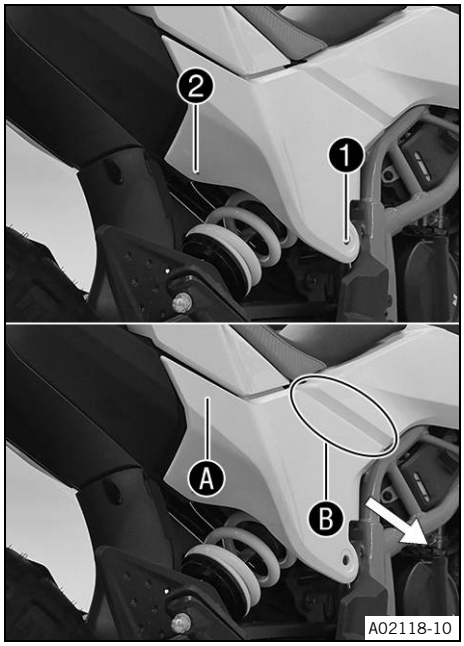

- Remove screw ❶.
- Remove push/pull captive panel screw ❷.
- Remove the right side fairing from rubber bushing Ⓐ and detach it from area Ⓑ.
- Carefully take off the right side fairing to the side.

13.14 Removing right fuel tank cover

DANGER

Fire hazard Fuel is highly flammable.

The fuel in the fuel tank expands when warm and can escape if overfilled.

- Do not refuel the vehicle in the vicinity of open flames, glowing, or smoldering objects.
- Make sure that nobody smokes in the vicinity of the vehicle during the refueling process.
- Switch off the engine for refueling.
- Make sure that no fuel is spilled; particularly not on hot parts of the vehicle.
- If any fuel is spilled, wipe it up immediately.
- Do not overfill the fuel tank.

WARNING

Danger of poisoning Fuel is harmful to health.

- Do not allow fuel to come into contact with skin, eyes, or clothing.
- Consult a doctor immediately if fuel has been ingested.
- Do not inhale fuel vapors.
- Rinse the affected area immediately with plenty of water in the event of contact with skin.
- Rinse eyes thoroughly with water and consult a doctor immediately if fuel comes into contact with eyes.
- If fuel spills on to your clothing, change the clothing.
- Store fuel properly in a suitable container and keep out of the reach of children.

NOTE

Environmental hazard Improper handling of fuel is dangerous to the environment.

- Do not allow fuel to enter the groundwater, the soil, or the sewage system.

Preparatory work

– Remove the seat. (p. 88)

Main work

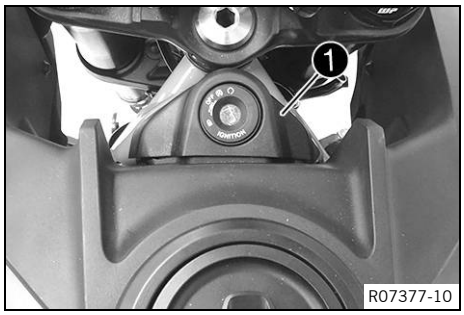

– Remove ignition lock cover ❶.

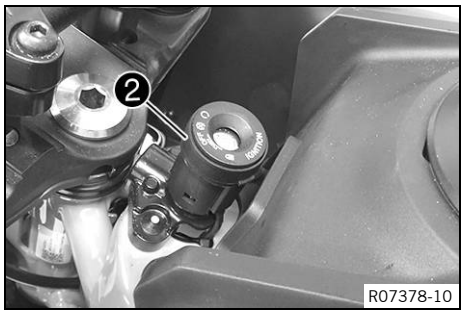

– Remove plastic retainer ❷.

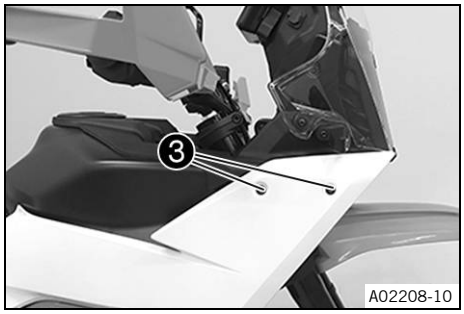

– Remove ❸ screws.

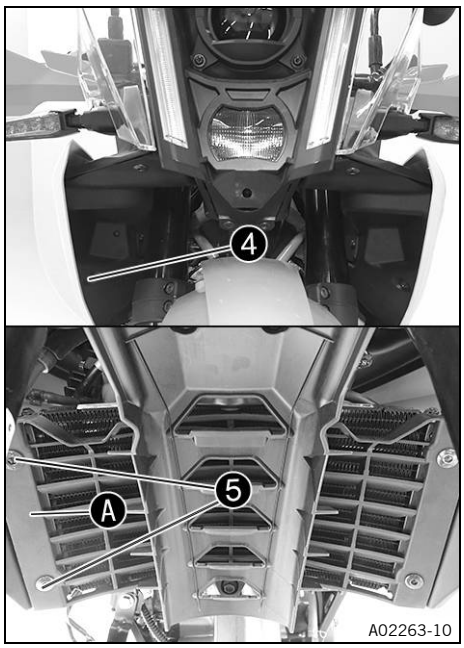

– Remove screw ❹.
– Remove ❺ screws.
– Remove fairings Ⓐ from the screw connection points.

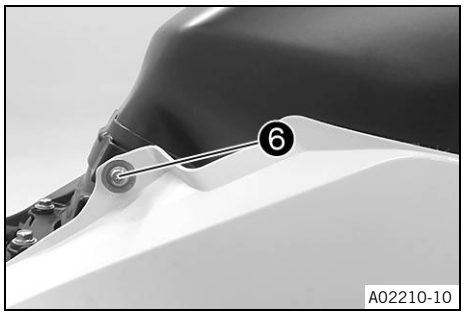

– Remove screw ❻.

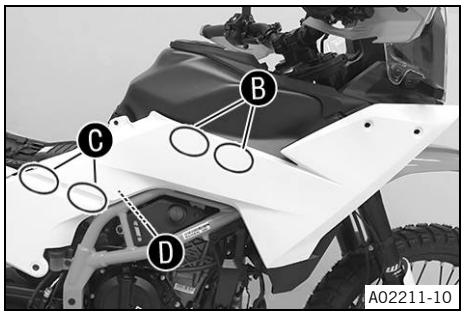

– Remove the fairing from areas Ⓑ and Ⓒ.
– Unhook the fairing from guide pins Ⓓ and remove it.

13.15 Installing the right fuel tank cover

Main work

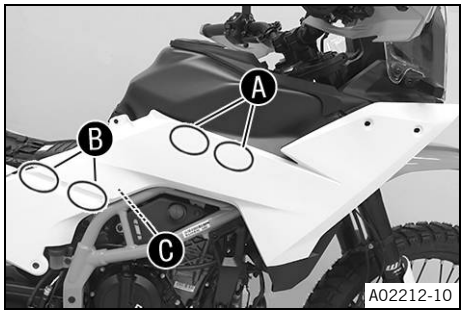

– Attach the fairings in areas A and B, press guide pin C into the guide.

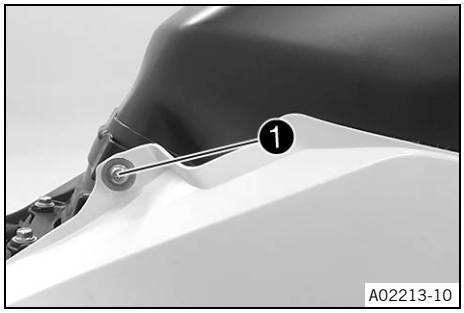

– Mount and tighten screw 1.

Remaining screws on chassis	
M6	9 Nm (6.6 ft·lb$_f$)

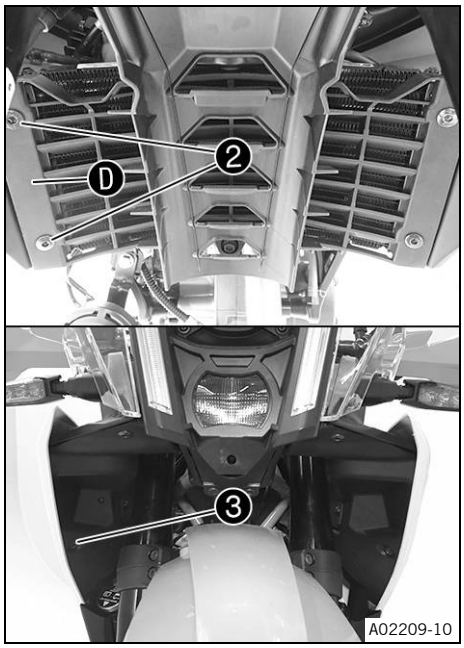

– Attach fairings D at the screw connection points.
– Position the fairings behind the radiator protection grille.
– Mount and tighten screws 2.

Screw, radiator shield	
M6	8 Nm (5.9 ft·lb$_f$)

– Mount and tighten screw 3.

Remaining screws on chassis	
M6	9 Nm (6.6 ft·lb$_f$)

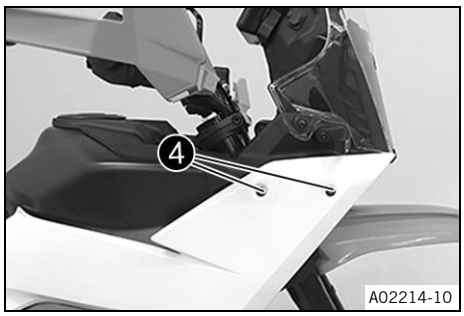

– Mount and tighten screws 4.

Remaining screws on chassis	
M6	9 Nm (6.6 ft·lb$_f$)

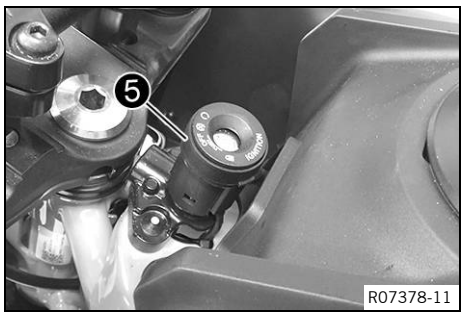

– Position plastic retainer ❺.

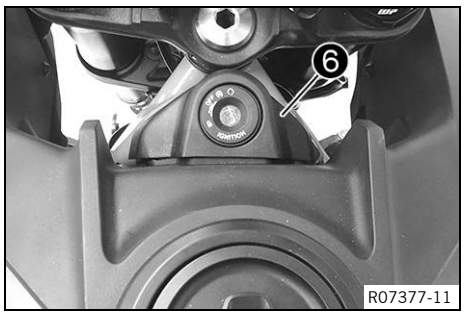

– Mount ignition lock cover ❻.

Reworking

– Mount the seat. (p. 88)

13.16 Installing the right side cover

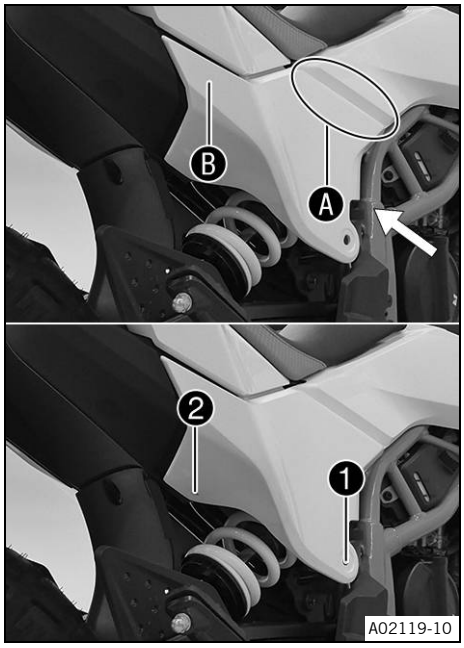

– Hook the right side fairing into area Ⓐ and press it into rubber bushing Ⓑ.
– Mount and tighten screw ❶.

Screw, side fairing bracket on frame	
M6	6 Nm (4.4 ft·lb$_f$)

– Mount push/pull captive panel screw ❷.

13.17 Removing the skid plate

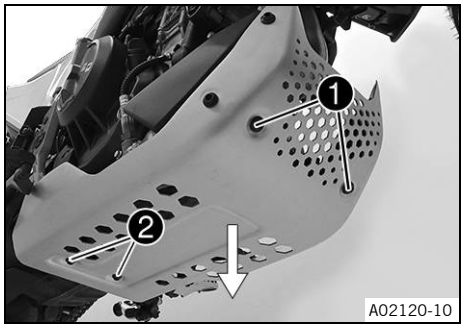

– Remove screws ❶ and ❷.
– Remove skid plate downward.

13.18 Installing the skid plate

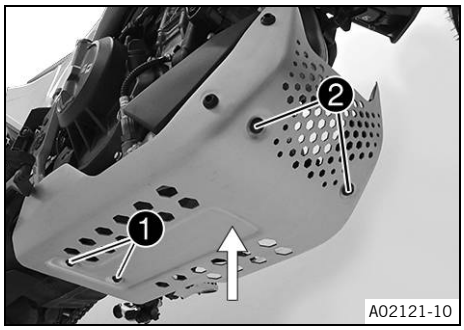

– Position the skid plate, mount and tighten screws ❶ and ❷.

Screw, engine guard	
M6	9 Nm (6.6 ft·lb$_f$) **Loctite® 243**

13.19 Removing the engine guard retaining bracket

Preparatory work

– Remove the skid plate. (p. 98)

Main work

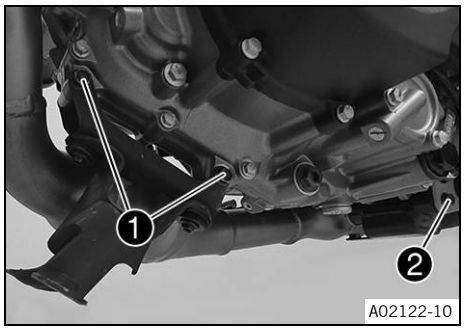

– Remove screws ❶ and ❷ with nuts.
– Remove the skid plate retaining bracket.

13.20 Installing the engine guard retaining bracket

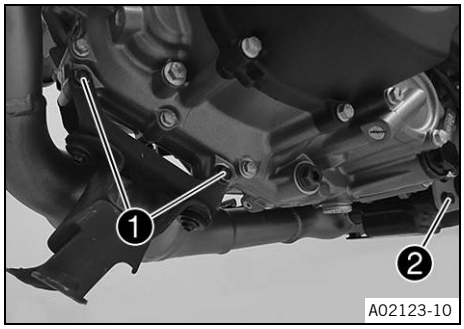

Main work

– Position the skid plate retaining bracket, mount and tighten screws ❶ and ❷ with nuts.

Screw, engine guard retaining bracket	
M6	9 Nm (6.6 ft·lb$_f$) **Loctite® 243**

Reworking

– Install the skid plate. (p. 98)

13.21 Removing the front top fender

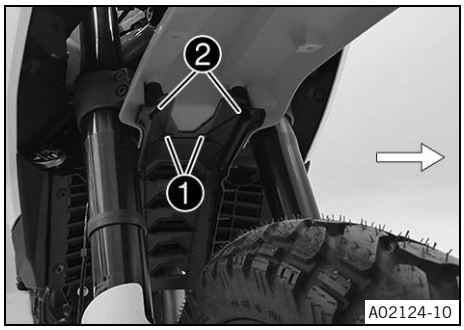

– Remove screws ❶ and ❷. Take the fender off to the front.

13.22 Installing the front top fender

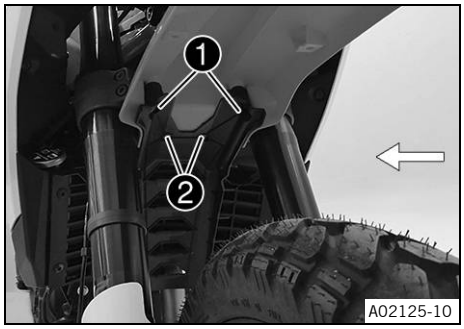

– Position the front fender. Mount and tighten screws ❶.

Screw, front fender	
M6	6 Nm (4.4 ft·lb$_f$)

– Mount and tighten screws ❷.

Screw, rear fender	
M6	6 Nm (4.4 ft·lb$_f$)

13.23 Removing the windshield

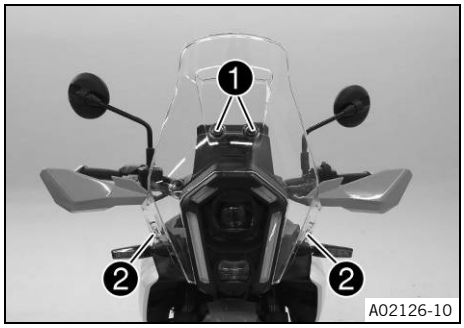

– Remove ❶ screws.
– Remove ❷ screws.
– Remove the windshield to the front.

13.24 Installing the windshield

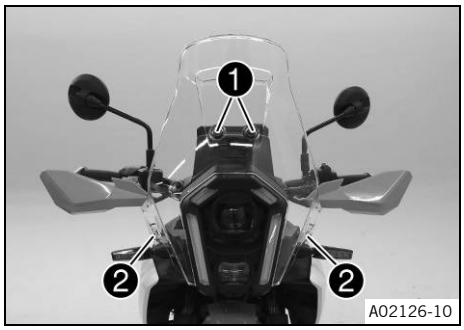

– Position the windshield.
– Mount and tighten screws ❶.

Screw, windshield on mask support	
M6	6 Nm (4.4 ft·lb$_f$)

– Mount and tighten screws ❷.

Screw, windshield on mask support	
M6	6 Nm (4.4 ft·lb$_f$)

13.25 Removing the fork protector

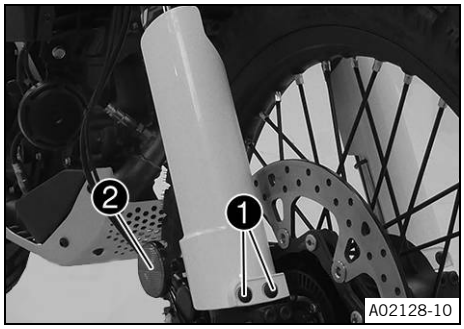

– Remove ❶ screws.
– Remove screw ❷ and reflector.
– Take off the fork protector at the front.
– Repeat these steps on the opposite side.

13.26 Installing the fork protector

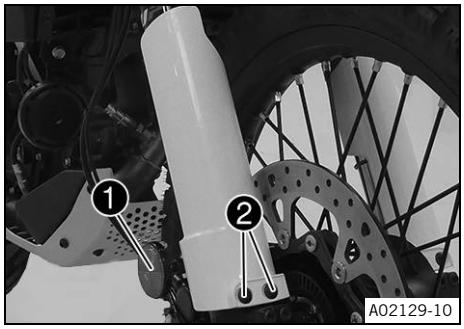

– Position the fork protector. Mount screw ❶, but do not tighten yet.

Screw, reflector	
M6	6 Nm (4.4 ft·lb$_f$)

– Mount screws ❷, but do not tighten yet.

Remaining screws on chassis	
M6	9 Nm (6.6 ft·lb$_f$)

✓ The fork protector is evenly aligned to the front.

- Tighten all screws of the fork protector.
- Repeat these steps on the opposite side.

14.1 Anti-lock braking system

WARNING

Danger of accidents Changes to the vehicle impair the function of the ABS.

- Do not make any changes to the suspension travel.
- Only use spare parts on the brake system which have been approved and recommended by the vehicle manufacturer.
- Only use tires and wheels approved and recommended by the vehicle manufacturer with the corresponding speed rating.
- Maintain the specified tire pressure.
- Ensure that service work and repairs are performed professionally.

WARNING

Danger of accidents Driving aids can reduce the probability of a fall only within physical limits.

It is not always possible to compensate for certain riding situations, for example with luggage loaded with a high center of gravity, varying road surfaces, steep descents or full braking without disengaging the gear.

- Adapt your riding style to the road conditions and your driving ability.

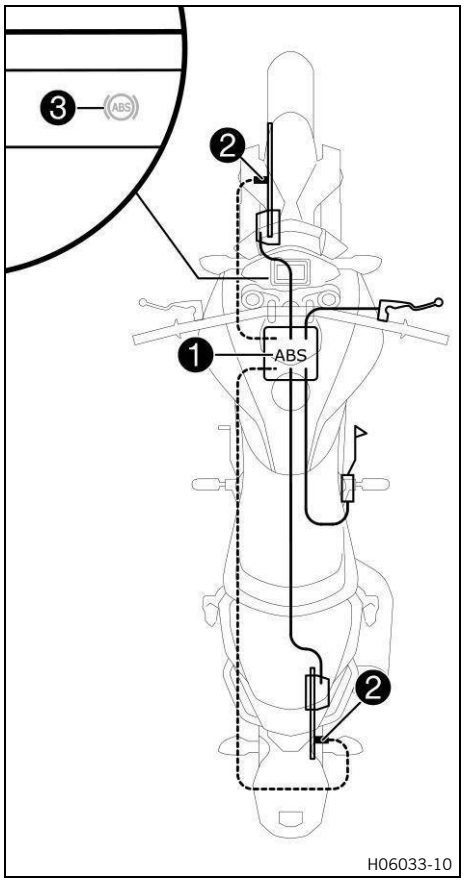

The **ABS** is a safety system that prevents the wheels locking when driving straight ahead or when cornering (within the limits of physics).

WARNING

Danger of accidents An incorrectly selected ABS mode makes it more difficult to control the vehicle.

The ABS modes are each only suitable for certain conditions.

- Always select an ABS mode that suits the ground and the riding situation.

The **ABS** module ❶, which consists of a hydraulic unit, ABS control unit, and return pump, is installed under the fuel tank. One wheel speed sensor ❷ is located in each case on the front and the rear wheel.

The ABS control is dependent on the riding mode. ABS has two operating modes: the **Road** and **Offroad** ABS modes.

In ABS mode **Road**, ABS controls both wheels.

In ABS mode **Offroad**, there is no ABS control on the rear wheel.

Note

The curve dependent control is only active in ABS mode **Road**.

The ABS operates with two independent brake circuits (front and rear brakes). When the ABS control unit detects a locking tendency in a wheel, ABS begins regulating the brake pressure. The control function causes a slight pulsing of the hand and foot brake levers.

The ABS warning light ❸ must light up after the ignition is switched on and go out after starting off. If it does not go out after starting off or if it is lit while riding, this indicates a fault in the ABS. In this case, the ABS is no longer enabled and the wheels may lock during braking. The brake system itself stays functional; only ABS control is not available.

The ABS warning lamp may also light up if the rotating speeds of the front and rear wheels differ greatly under extreme riding conditions, for example when making "wheelies" or if the rear wheel spins. This causes the ABS to switch off.

To reactivate the ABS, stop the vehicle and switch off the ignition. The ABS is reactivated when the vehicle is switched on again. The ABS warning light goes out after starting off.

14.2 Checking the brake discs

WARNING

Danger of accidents Worn-out brake discs reduce the braking action.

– Make sure that worn-out brake discs are replaced immediately.

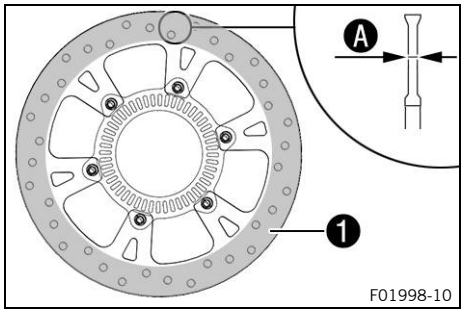

– Check the brake disc thickness of the front and rear brake disc at several places on the disc to see if they conform to measurement Ⓐ.

Brake disc wear limit	
front	4.5 mm (0.177 in)
rear	4.5 mm (0.177 in)

Note

Wear will reduce the thickness of the brake disc at contact surface ❶ of the brake linings.

» If the brake disc thickness is less than the specified value.
  – Change the brake discs of the front brake.
  – Change the brake discs on the rear brake.

– Check the front and rear brake discs for damage, cracks, and deformation.
  » If the brake disc shows signs of damage, cracks, or deformation:
    – Change the brake discs of the front brake.
    – Change the brake discs on the rear brake.

14.3 Checking the brake fluid level for the front brake

WARNING

Danger of accidents Brake fluid which is too old or of the wrong type impairs the function of the brake system.

- Make sure that brake fluid for the front and rear brake is changed in accordance with the service schedule.
- Make sure that only clean, approved brake fluid from a tightly sealed container is used.

WARNING

Danger of accidents An insufficient brake fluid level will cause the brake system to fail.

If the brake fluid level drops below the specified marking or the specified value, the brake system has a leak or the brake pads are worn down.

- Have the brake system checked and make sure that the problem has been eliminated before the vehicle is used again.

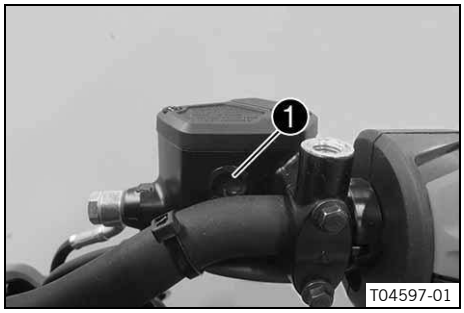

- Move the brake reservoir mounted on the handlebar to a horizontal position.
- Check the brake fluid level in sight glass 1.
  - » If the brake fluid level is below the **MIN** marking:
    - Add brake fluid for the front brake. (p. 104)

14.4 Adding brake fluid for the front brake

WARNING

Danger of accidents Brake fluid which is too old or of the wrong type impairs the function of the brake system.

- Make sure that brake fluid for the front and rear brake is changed in accordance with the service schedule.
- Make sure that only clean, approved brake fluid from a tightly sealed container is used.

WARNING

Danger of accidents An insufficient brake fluid level will cause the brake system to fail.

If the brake fluid level drops below the specified marking or the specified value, the brake system has a leak or the brake pads are worn down.

- Have the brake system checked and make sure that the problem has been eliminated before the vehicle is used again.

WARNING

Health hazard Brake fluid is a harmful substance.

- Keep brake fluid out of the reach of children.
- Wear suitable protective clothing and safety glasses.
- Do not allow brake fluid to come into contact with the skin, the eyes, or clothing.
- Consult a doctor immediately if brake fluid has been ingested.
- Rinse the affected area with plenty of water in the event of contact with the skin.
- Rinse eyes thoroughly with water immediately and consult a doctor if brake fluid comes into contact with the eyes.
- If brake fluid spills on to your clothing, change the clothing.

NOTE

Environmental hazard Hazardous substances cause environmental damage.

– Dispose of oils, grease, filters, fuel, cleaning agents, brake fluid, etc. correctly and in accordance with the applicable regulations.

Note

Avoid contact between brake fluid and painted parts. Brake fluid corrodes paint.

Preparatory work

– Check that the brake pads of the front brake are secured. (p. 105)

Main work

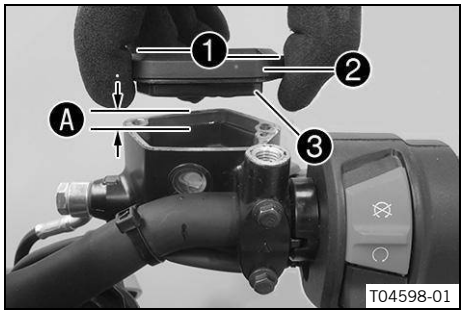

– Move the brake reservoir mounted on the handlebar to a horizontal position.
– Remove 1 screws.
– Take off cover 2 with diaphragm 3.
– Add brake fluid up to level A.

Level A	5 mm (0.20 in)

Brake fluid DOT 5.1 (p. 168)

– Position the cover with diaphragm. Mount and tighten the screws.

Immediately clean up any brake fluid that has overflowed or spilled with water.

14.5 Checking that the brake pads of the front brake are secured

WARNING

Danger of accidents Worn brake pads reduce the brake action.

– Make sure that worn brake pads are replaced immediately.

WARNING

Danger of accidents Damaged brake discs reduce the braking action.

If the brake linings are not changed in time, the brake lining carriers grind against the brake disc. As a consequence, the brake action is greatly reduced and the brake discs are destroyed.

– Check the brake linings regularly.

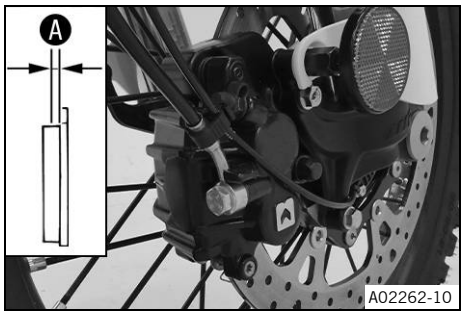

– Check all brake pads on both brake calipers for their lining thickness A.

Minimum pad thickness A	≥ 1 mm (≥ 0.04 in)

» If it is less than the minimum thickness:
  – Change the front brake pads.

– Check the brake linings for damage and cracking.
» If there is damage or cracking:
  – Change the front brake pads.

– Check that the brake pads are secured.
  » If the brake pads are not secured correctly:
    – Secure brake pads, replace with new parts if necessary.

14.6 Checking the free travel of the brake pedal

WARNING
Danger of accidents The brake system fails in the event of overheating.
If there is no free travel on the brake lever, pressure builds up in the brake system.
– Set the free travel on the brake lever as specified.

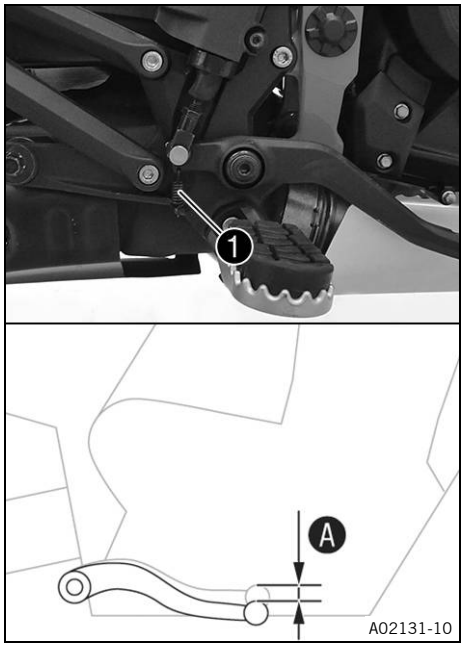

– Detach spring 1.
– Move the brake pedal back and forth between the end stop and the brake pedal cylinder piston actuation and check free travel A.

Free travel of brake pedal	3 mm … 5 mm (0.12 in … 0.20 in)

» If the free travel does not meet the specifications:
  – Adjust the free travel of the foot brake lever.

Note
Have this carried out by an authorized contractual partner.

  – Attach spring 1.

14.7 Checking the brake fluid level for the rear brake

WARNING
Danger of accidents Brake fluid which is too old or of the wrong type impairs the function of the brake system.
– Make sure that brake fluid for the front and rear brake is changed in accordance with the service schedule.
– Make sure that only clean, approved brake fluid from a tightly sealed container is used.

WARNING
Danger of accidents An insufficient brake fluid level will cause the brake system to fail.
If the brake fluid level drops below the specified marking or the specified value, the brake system has a leak or the brake pads are worn down.
– Have the brake system checked and make sure that the problem has been eliminated before the vehicle is used again.

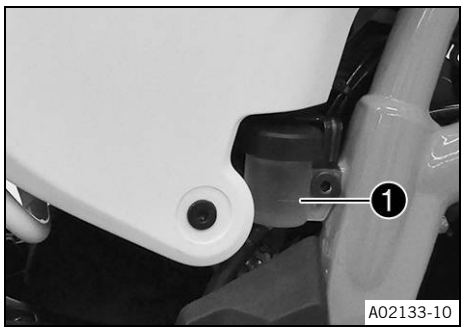

– Stand the vehicle upright.
– Check the brake fluid level in the brake fluid reservoir.
  » When the fluid level has reached the **MIN** marking 1.
    – Add brake fluid for the rear brake. (p. 107)

14.8 Adding brake fluid for the rear brake

WARNING

Danger of accidents Brake fluid which is too old or of the wrong type impairs the function of the brake system.

– Make sure that brake fluid for the front and rear brake is changed in accordance with the service schedule.
– Make sure that only clean, approved brake fluid from a tightly sealed container is used.

WARNING

Danger of accidents An insufficient brake fluid level will cause the brake system to fail.

If the brake fluid level drops below the specified marking or the specified value, the brake system has a leak or the brake pads are worn down.

– Have the brake system checked and make sure that the problem has been eliminated before the vehicle is used again.

WARNING

Health hazard Brake fluid is a harmful substance.

– Keep brake fluid out of the reach of children.
– Wear suitable protective clothing and safety glasses.
– Do not allow brake fluid to come into contact with the skin, the eyes, or clothing.
– Consult a doctor immediately if brake fluid has been ingested.
– Rinse the affected area with plenty of water in the event of contact with the skin.
– Rinse eyes thoroughly with water immediately and consult a doctor if brake fluid comes into contact with the eyes.
– If brake fluid spills on to your clothing, change the clothing.

NOTE

Environmental hazard Hazardous substances cause environmental damage.

– Dispose of oils, grease, filters, fuel, cleaning agents, brake fluid, etc. correctly and in accordance with the applicable regulations.

Note

Avoid contact between brake fluid and painted parts. Brake fluid corrodes paint.

Preparatory work

– Check that the brake pads of the rear brake are secured. (p. 108)
– Remove the right side fairing. (p. 93)

Main work

Condition: Screw cap is locked

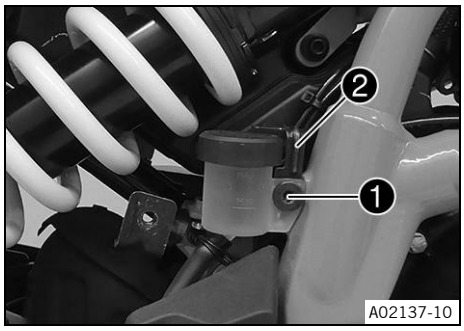

– Remove screw ❶ and take off screw cap lock ❷.

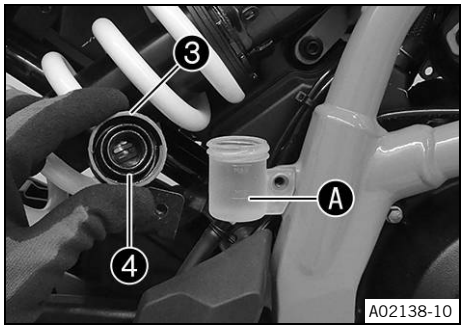

– Stand the vehicle upright.
– Remove screw cap ❸ with membrane ❹.
– Add brake fluid to mark Ⓐ.

Brake fluid DOT 5.1 (p. 168)

– Mount the screw cover with the membrane.

Immediately clean up any brake fluid that has overflowed or spilled using water.

Condition: Screw cap is locked

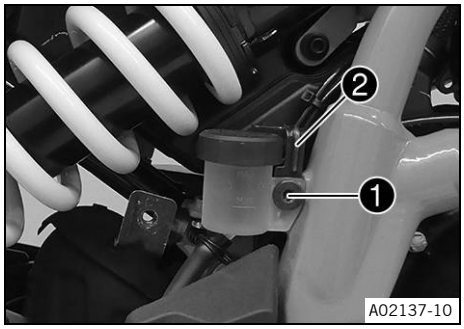

– Position screw cap lock ❷ and mount and tighten screw ❶.

Screw, compensating tank cap lock, rear brake	
M5	9 Nm (6.6 ft·lb$_f$)

Reworking

– Install the right side cover. (p. 97)

14.9 Checking that the brake pads of the rear brake are secured

WARNING

Danger of accidents Worn brake pads reduce the brake action.

– Make sure that worn brake pads are replaced immediately.

WARNING

Danger of accidents Damaged brake discs reduce the braking action.

If the brake linings are not changed in time, the brake lining carriers grind against the brake disc. As a consequence, the brake action is greatly reduced and the brake discs are destroyed.

– Check the brake linings regularly.

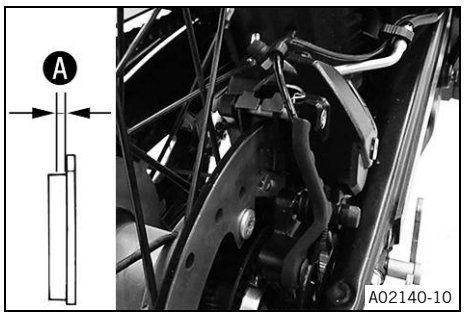

– Check all brake pads on both brake calipers for their lining thickness A.

Minimum pad thickness A	≥ 1 mm (≥ 0.04 in)

» If it is less than the minimum thickness:
  – Change the rear brake pads.
– Check the brake linings for damage and cracking.
» If there is damage or cracking:
  – Change the rear brake pads.
– Check that the brake pads are secured.
» If the brake pads are not secured correctly:
  – Secure brake pads, replace with new parts if necessary.

15.1 Removing the front wheel

Preparatory work

– Raise the motorcycle with the rear lifting gear. (p. 85)
– Remove the front top fender. (p. 99)
– Lift the motorcycle with the front lifting gear. (p. 85)

Main work

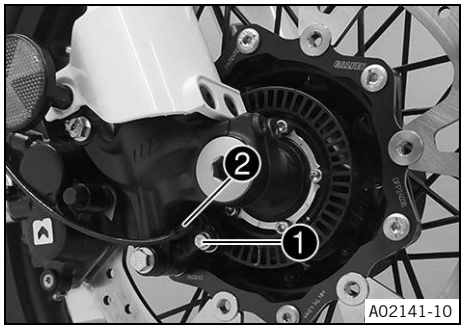

– Remove screw ❶ and pull wheel speed sensor ❷ out of the hole.

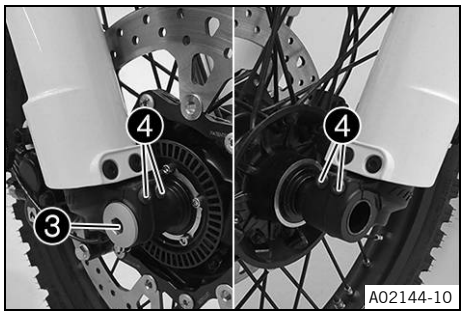

– Loosen screw ❸ by four turns.
– Loosen screws ❹.
– Press on screw ❸ to push the wheel spindle out of the fork shoe.
– Remove screw ❸.

WARNING

Danger of accidents Damaged brake discs reduce the braking action.

– Always lay the wheel down in such a way that the brake disc is not damaged.

– Hold front wheel and remove wheel spindle. Take the front wheel out of the fork.

Do not actuate the hand brake lever when the front wheel is removed.

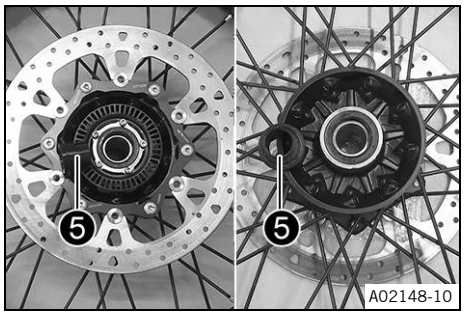

– Remove spacers ❺.

15.2 Installing the front wheel

WARNING

Danger of accidents Oil, grease or wax on the brake discs reduces the brake action.

– Always keep the brake discs free of oil, fat and wax.
– Clean the brake discs with brake cleaner when necessary.

Main work

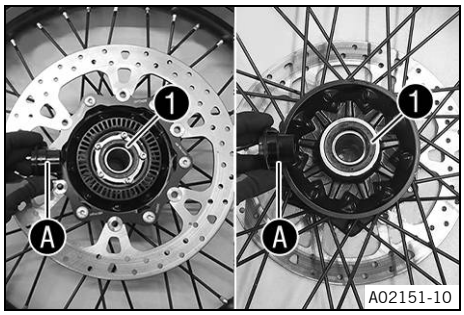

– Check the wheel bearing for damage and wear.
  » If the wheel bearing is damaged or worn:
    – Change the front wheel bearing.
– Clean and grease radial shaft seal ❶ and contact surfaces Ⓐ on the spacers.

Long-life grease (p. 167)

– Insert spacers.

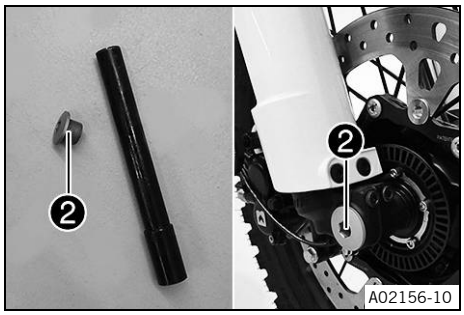

– Clean screw ❷ and the wheel spindle.
– Grease wheel spindle lightly.

Long-life grease (p. 167)

– Jack up the front wheel into the fork, position it, and insert the wheel spindle.
– Mount and tighten screw ❷.

Screw, wheel spindle, front	
M24	45 Nm (33.2 ft·lb$_f$)

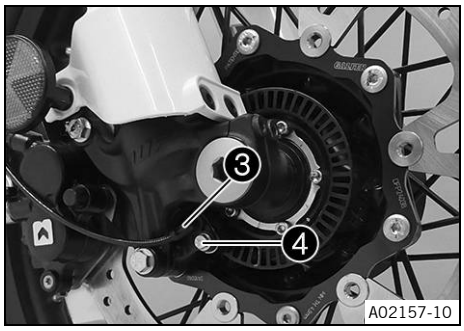

– Position wheel speed sensor ❸ in the hole.
– Mount and tighten screw ❹.

Screw, wheel speed sensor holder	
M6	8 Nm (5.9 ft·lb$_f$)

– Operate the hand brake lever repeatedly until the brake pads are in contact with the brake disc and a pressure point is reached.
– Take the motorcycle off the front lifting gear. (p. 86)
– Remove the rear of the motorcycle from the lifting gear. (p. 85)
– Operate the front brake and compress the fork a few times firmly.
  ✓ The fork legs straighten.

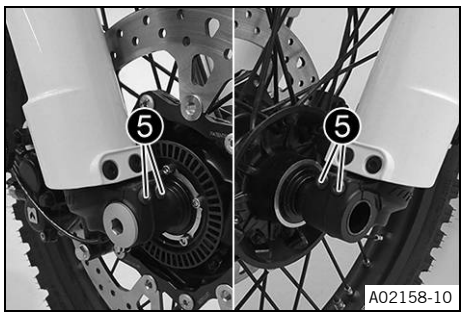

– Tighten screws ❺.

Screw, fork shoe	
M8	15 Nm (11.1 ft·lb$_f$)

Reworking

– Install the front top fender. (p. 99)

15.3 Removing the rear wheel

Preparatory work

– Raise the motorcycle with the rear lifting gear. (p. 85)

Main work

– Manually press the brake caliper toward the brake disc to push back the brake pistons.
– Remove screw ❶ and pull wheel speed sensor ❷ out of the hole.
– Remove nut ❸ with washer.
– Remove chain tension adjuster ❹.
– Hold the rear wheel and remove wheel spindle ❺ with the washer and chain adjuster ❹.

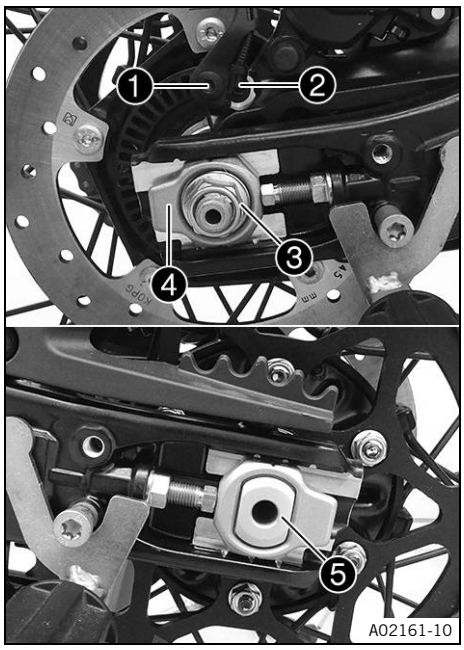

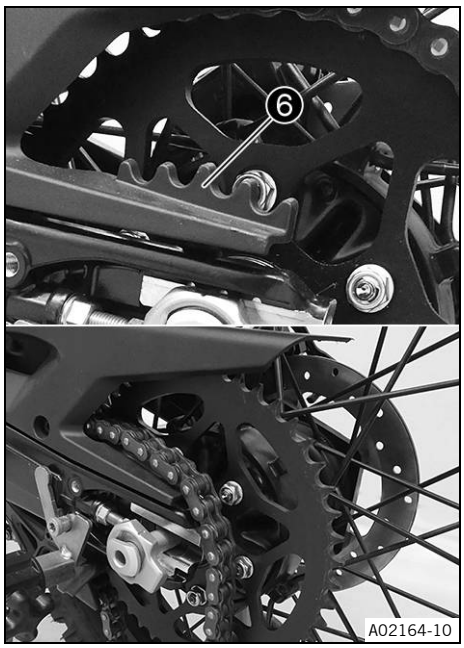

– Push the rear wheel forward as far as possible.

Protect the components against damage by covering them.

– Take the chain off the rear sprocket and place it on chain sprocket guard ❻.

WARNING
Danger of accidents Damaged brake discs reduce the braking action.
– Always lay the wheel down in such a way that the brake disc is not damaged.

– Pull the rear wheel back until the brake caliper bracket is suspended freely between the brake disc and rim.

Do not actuate the brake pedal when the rear wheel is removed.

15.4 Installing the rear wheel

WARNING
Danger of accidents Oil, grease or wax on the brake discs reduces the brake action.
– Always keep the brake discs free of oil, fat and wax.
– Clean the brake discs with brake cleaner when necessary.

WARNING
Danger of accidents There is no braking effect to start with at the rear brake after installing the rear wheel.
– Actuate the foot brake several times before going on a ride until you can feel a firm pressure point.

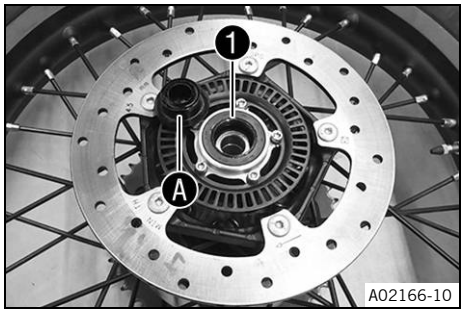

Main work

– Check the wheel bearing for damage and wear.
  » If the wheel bearing is damaged or worn:
    – Change the rear wheel bearing.
– Remove the spacers.
– Clean and grease radial shaft seal ❶ and contact surfaces Ⓐ on the spacers.

Long-life grease (p. 167)

– Insert spacers.
– Clean and grease the thread of the wheel spindle and axle nut.

Long-life grease (p. 167)

– Clean and lightly grease the wheel spindle.

Long-life grease (p. 167)

– Clean the contact areas on the brake caliper bracket and link fork.

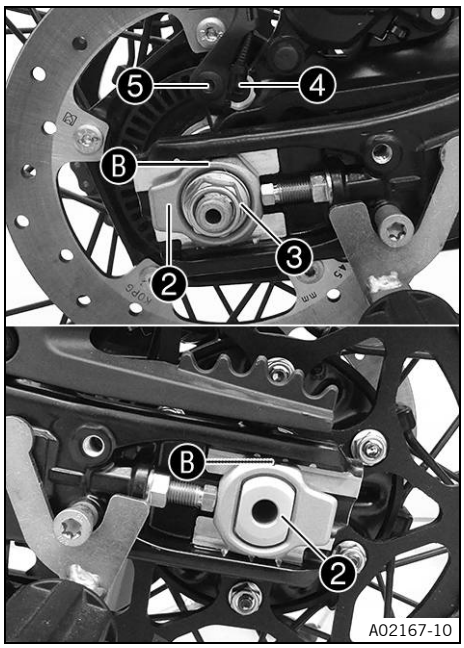

– Jack up the rear wheel into the link fork, position it, and insert the wheel spindle.
  ✓ The brake pads are positioned correctly.
– Place the chain on the rear sprocket.
– Position chain tension adjuster ❷.
– Mount the washer and nut ❸, but do not tighten yet.

Mount left and right chain adjusters ❷ in the same position.

– Make sure that chain adjusters ❷ are fitted correctly on the adjusting screws.
– Tighten nut ❸.

In order for the rear wheel to be correctly aligned, the markings on the left and right chain adjusters must be in the same position relative to reference markings Ⓑ.

Nut, wheel spindle, rear	
M16	100 Nm (73.8 ft·lb$_f$)

– Position wheel speed sensor ❹ in the hole.
– Mount and tighten screw ❺.

Screw, wheel speed sensor holder	
M6	8 Nm (5.9 ft·lb$_f$)

– Actuate the brake pedal repeatedly until the brake pads are in contact with the brake disc and a pressure point is achieved.

Reworking

– Check the chain tension. (p. 89)
– Remove the rear of the motorcycle from the lifting gear. (p. 85)

15.5 Checking the rear hub damping rubber pieces

Note

The engine power is transmitted from the rear sprocket to the rear wheel via the six damping rubber pieces. They eventually wear out during operation.
If the damping rubber pieces are not changed in time, the rear sprocket carrier and the rear hub will be damaged.

Preparatory work

– Raise the motorcycle with the rear lifting gear. (p. 85)
– Remove the rear wheel. (p. 112)

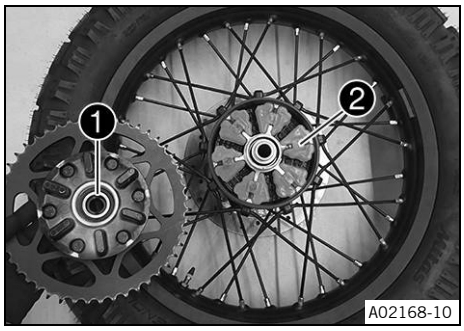

Main work

– Check bearing ❶.
  » If the bearing is damaged or worn:
    – Change the bearings.
– Check damping rubber pieces ❷ of the rear hub for damage and wear.
  » If the damping rubber pieces of the rear hub are damaged or worn:
    – Change all the damping rubber pieces of the rear hub.

– Lay the rear wheel on a workbench with the rear sprocket facing upward and insert the wheel spindle in the hub.
– To check play Ⓐ, hold the rear wheel tight and try to rotate the rear sprocket.

Play of damping rubber pieces on rear wheel	≤ 5 mm (≤ 0.20 in)

Note
Measure the play on the outside of the rear sprocket.

» If clearance Ⓐ is larger than the specified value:
  – Change all the damping rubber pieces of the rear hub.

Reworking

– Install the rear wheel. (p. 113)
– Check the chain tension. (p. 89)
– Remove the rear of the motorcycle from the lifting gear. (p. 85)

15.6 Checking the tire condition

WARNING
Danger of accidents If a tire bursts while riding, the vehicle becomes uncontrollable.
– Ensure that damaged or worn tires are replaced immediately.

WARNING
Danger of accidents Non-approved or non-recommended tyres and wheels impact the handling characteristic.
– Only use tires and wheels approved and recommended by the vehicle manufacturer with the corresponding speed rating.

WARNING
Danger of accidents New tires have reduced road grip.
The contact surface on new tires is not yet roughened.
– Run in new tires with moderate riding and only gradually increase the lean angle.

Run-in distance	200 km (124.3 mi)

WARNING

Danger of accidents Different tire profiles on the front and rear wheels can make it more difficult to control the vehicle.

– Make sure that only tires of the same tread type are mounted to the front and rear wheel.

Note

The type, condition, and pressure of the tires all have a major impact on the handling of the motorcycle.
Worn tires have a negative effect on handling characteristics, especially on wet surfaces.

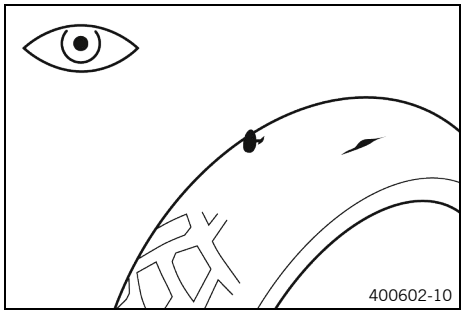

– Check the front and rear tires for cuts, embedded objects, and other damage.
  » If the tires have cuts, run-in objects, or other damage:
    – Change the tires.
– Check the tread depth.

Minimum tread depth	≥ 2 mm (≥ 0.08 in)

Note

Observe the minimum tread depth required by national law.

  » If the tread depth is less than the minimum tread depth:
    – Change the tires.

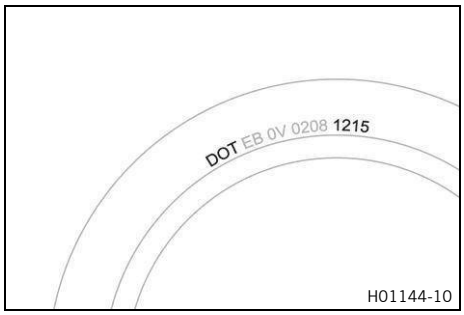

– Check the tire age.

Note

The tire date of manufacture is usually contained in the tire label and is indicated by the last four digits of the **DOT** number. The first two digits indicate the week of manufacture and the last two digits the year of manufacture.

KTM recommends that the tires be changed after 5 years at the latest, regardless of the actual state of wear.

  » If the tires are older than five years:
    – Change the tires.

15.7 Checking the tire pressure

Note

Low tire pressure leads to abnormal wear and the tire overheating.
Correct tire pressure ensures optimal riding comfort and maximum tire service life.

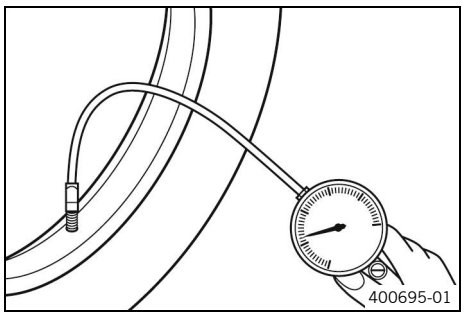

– Remove the protection cap.
– Check the tire pressure when the tires are cold.

Tire pressure when solo	
front	2.0 bar (29.0 psi)
rear	2.0 bar (29.0 psi)

Tire pressure with passenger / full payload	
front	2.0 bar (29.0 psi)
rear	2.2 bar (31.9 psi)

» If the tire pressure does not meet specifications:
  – Correct tire pressure.
– Mount the protection cap.

15.8 Checking the spoke tension

WARNING

Danger of accidents Incorrectly tensioned spokes impair the handling characteristic and can result in secondary damage.

If the spokes are too tight, they can break due to being overloaded.

Loose spokes can cause lateral or radial run-out in the wheel and other spokes will loosen as a result.

– Check the spoke tension regularly, especially on a new vehicle.

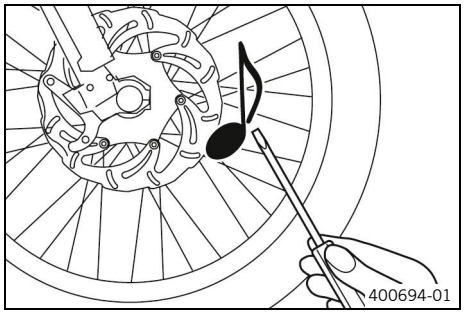

– Briefly tap each spoke with a screwdriver.

You should hear a high-pitched sound.

Note

The frequency of the sound depends on the spoke length and spoke diameter.

If spokes of the same length and diameter vibrate with a different tone, this is an indication that the spoke tensions differ.

» If the spoke tension differs:
  – Correct the spoke tension.

16.1 Removing the 12 V battery

WARNING

Danger of accidents Electronic components and safety devices will be damaged if the 12-V battery is discharged or missing.

If the 12-V battery is discharged or defective, malfunctions in the vehicle electronics can occur, especially when starting.

– Never operate the vehicle with a discharged 12-V battery or without a 12-V battery.

WARNING

Risk of injury Battery acid and battery gases cause chemical burns.

– Keep 12–V batteries out of the reach of children.
– Wear suitable protective clothing and safety glasses.
– Avoid contact with battery acid and battery gases.
– Keep sparks or open flames away from the 12 V battery.
– Only charge 12 V batteries in well-ventilated rooms.
– Rinse the affected area immediately with plenty of water in the event of contact with skin.
– Rinse eyes with water for at least 15 minutes and consult a doctor immediately if battery acid and battery gases get into the eyes.

Preparatory work

– Remove the seat. (p. 88)

Main work

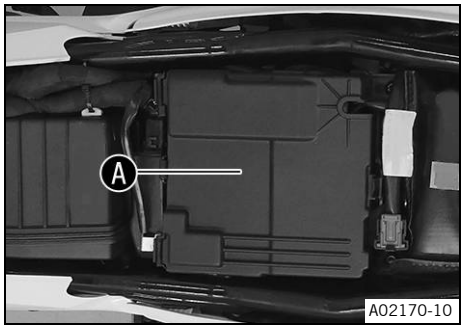

– Remove battery cover A.

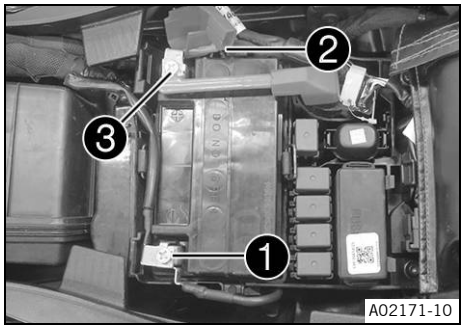

– Disconnect negative cable 1 from the 12 V battery.
– Pull back positive terminal cover 2.
– Disconnect positive cable 3 from the 12-V battery.
– Pull the 12-V battery upwards and out of the battery compartment.

16.2 Installing the 12 V battery

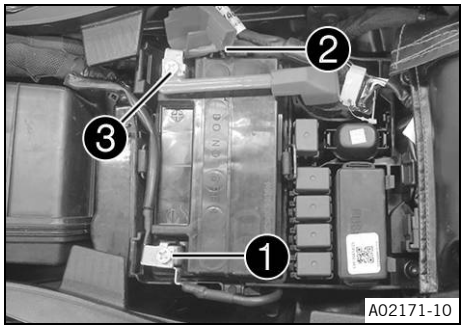

Main work

– Position the 12-V battery in the battery compartment.

12 V battery (ETZ-9-BS)

– Position positive cable ❷ and mount and tighten the screw.

Screw, battery terminal	
M6	4.5 Nm (3.32 ft·lb$_f$)

– Position positive terminal cover ❸.

– Position negative cable ❶ and mount and tighten the screw.

Screw, battery terminal	
M6	4.5 Nm (3.32 ft·lb$_f$)

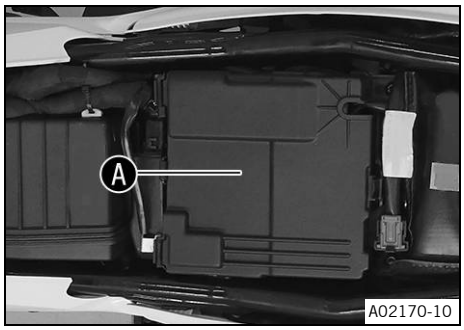

– Mount battery cover Ⓐ.

Reworking

– Mount the seat. (p. 88)

– Set the time and date. (p. 58)

16.3 Charging the 12 V battery

WARNING

Risk of injury Battery acid and battery gases cause chemical burns.

– Keep 12–V batteries out of the reach of children.
– Wear suitable protective clothing and safety glasses.
– Avoid contact with battery acid and battery gases.
– Keep sparks or open flames away from the 12 V battery.
– Only charge 12 V batteries in well-ventilated rooms.
– Rinse the affected area immediately with plenty of water in the event of contact with skin.
– Rinse eyes with water for at least 15 minutes and consult a doctor immediately if battery acid and battery gases get into the eyes.

NOTE

Environmental hazard 12–V batteries contain environmentally-hazardous materials.

– Do not dispose of 12–V batteries as household waste.
– Dispose of 12–V batteries at a collection point for used batteries.

NOTE

Environmental hazard Hazardous substances cause environmental damage.

– Dispose of oils, grease, filters, fuel, cleaning agents, brake fluid, etc. correctly and in accordance with the applicable regulations.

Note

Even when there is no load on the 12-V battery, it discharges steadily each day.

The state of charge and the method of charging are very important for the service life of the 12 V battery.

Rapid recharging with a high charging current shortens the service life of the battery.

If the charging current, charging voltage, or charging time is exceeded, electrolyte escapes through the safety valves. This reduces the capacity of the 12-V battery.

If the 12-V battery is left in a discharged state for an extended period, it will become deeply discharged and sulfating occurs, destroying the battery.

The 12 V battery is maintenance-free. The acid level does not have to be checked.

Preparatory work

– Remove the seat. (p. 88)
– Disconnect the negative cable of the 12-V battery to avoid damage to the onboard electronics.

Main work

S06148-01

– Connect a charger to the 12 V battery. Connect the battery charger to the mains connection.

Charge the 12-V battery to a maximum of 10 % of the capacity specified on the battery housing.

Battery charger (58429074000)
USA/CA battery charger **TecMATE Optimate PRO** (A61029974144)
Battery charger **TecMATE Optimate PRO** UK (A61029974244)

Note

It is impossible to overcharge the 12–V battery using this battery charger.

Note

This battery charger is not suitable for lithium-ion batteries.

– Switch off the charger after charging and disconnect from the 12 V battery.

The charging current, charging voltage, and charging time must not be exceeded.	
Recharge the 12 V battery regularly when the motorcycle is not being used.	3 months
If the 12 V battery is depleted from starting the vehicle repeatedly, the battery must be charged immediately.	

– Position the negative cable and mount and tighten the screw.
– Position the negative terminal cover.

Reworking

– Mount the seat. (p. 88)
– Set the time and date. (p. 58)

16.4 Changing the main fuse

WARNING

Fire hazard Incorrect fuses overload the electrical system.

– Use only fuses with the prescribed amperage.
– Do not bypass or repair fuses.

Note

The main fuse protects all electrical power loads of the vehicle. The main fuse is under the seat.

Preparatory work

– Remove the seat. (p. 88)

Main work

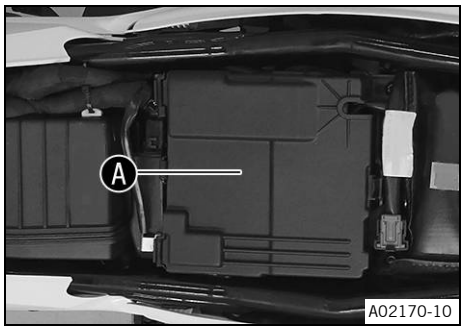

– Remove battery cover A.

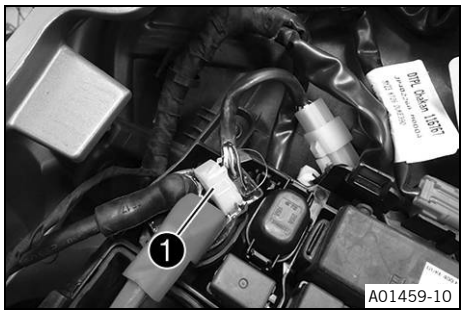

– Remove protection cap 1.

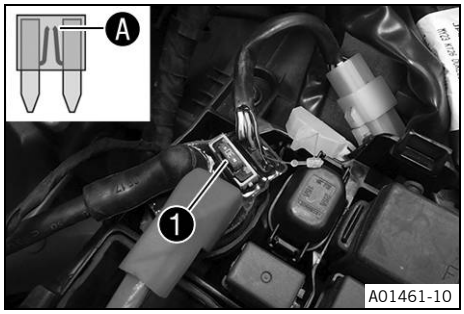

– Remove faulty main fuse 2.

Note

A faulty fuse has a burned-out fuse wire A.
A spare fuse is located in the fuse box.

– Insert the main fuse.

Fuse (75011088030)

Tip
Put a spare fuse in the fuse box so that it is available if needed.

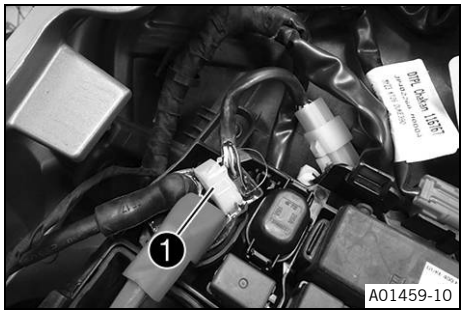

– Mount protection cap 1.

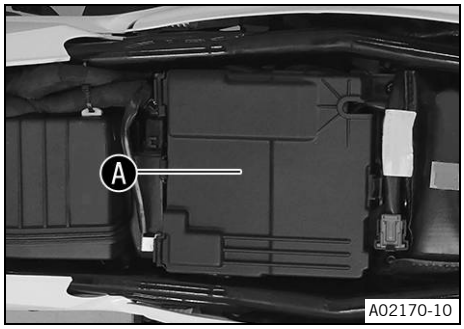

– Mount battery cover A.

Reworking

– Mount the seat. (p. 88)
– Set the time and date. (p. 58)

16.5 Changing the ABS fuses

WARNING
Fire hazard Incorrect fuses overload the electrical system.
– Use only fuses with the prescribed amperage.
– Do not bypass or repair fuses.

Note
Two fuses for the ABS are located under the seat.
These fuses protect the return pump and the hydraulic unit of the ABS.
The third fuse, which protects the ABS control unit, is located in the fuse box.

Preparatory work

– Remove the seat. (p. 88)

Main work

– Remove battery cover Ⓐ.

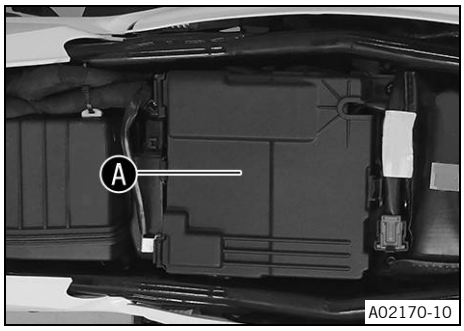

Changing the fuse of the ABS hydraulic unit

– Take off the protection cap and remove fuse ❶.

> **Note**
> A faulty fuse has a burned-out fuse wire Ⓑ.

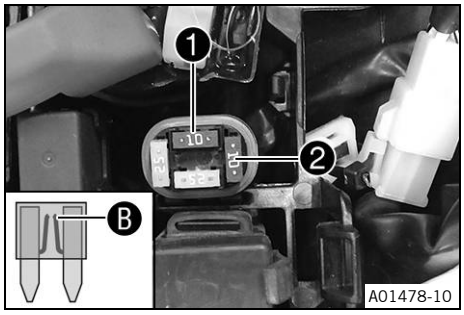

> **WARNING**
> **Fire hazard** Incorrect fuses overload the electrical system.
> – Use only fuses with the prescribed amperage.
> – Do not bypass or repair fuses.

– Insert the spare fuse with the correct rating.

Fuse (58011109110)

> **Tip**
> Insert spare fuse ❷ in the fuse box so that it is available if needed.

– Mount the protection cap.

Changing the fuse of the ABS return pump

– Remove battery cover Ⓐ.
– Take off the protection cap and remove fuse ❸.

> **Note**
> A faulty fuse has a burned-out fuse wire Ⓑ.

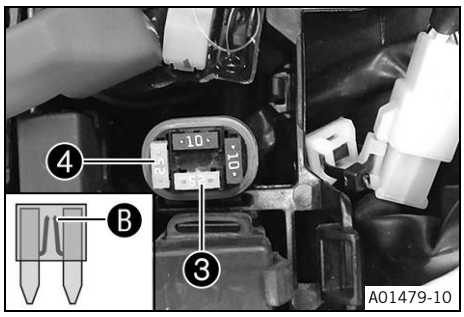

> **WARNING**
> **Fire hazard** Incorrect fuses overload the electrical system.
> – Use only fuses with the prescribed amperage.
> – Do not bypass or repair fuses.

– Insert the spare fuse with the correct rating.

Fuse (58011109125)

> **Tip**
> Insert spare fuse ❹ in the fuse box so that it is available if needed.

– Mount the protection cap.

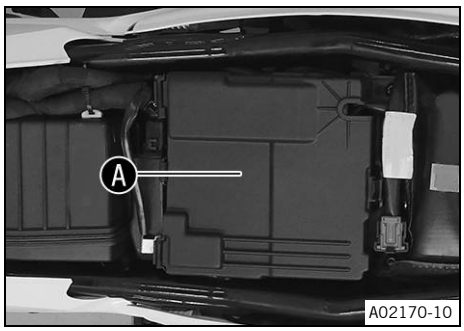

– Mount battery cover A.

Reworking

– Mount the seat. (p. 88)

16.6 Changing the fuses of individual electrical power consumers

WARNING

Fire hazard Incorrect fuses overload the electrical system.

– Use only fuses with the prescribed amperage.
– Do not bypass or repair fuses.

Note

The fuse box containing the fuses of individual electrical power consumers is located under the seat.

Preparatory work

– Remove the seat. (p. 88)

Main work

– Remove battery cover A.

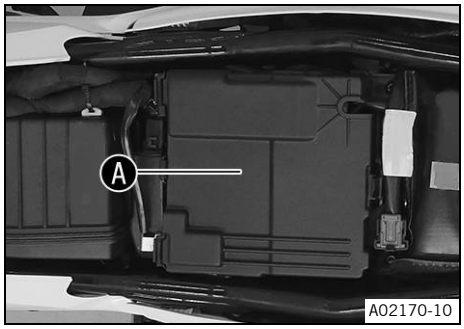

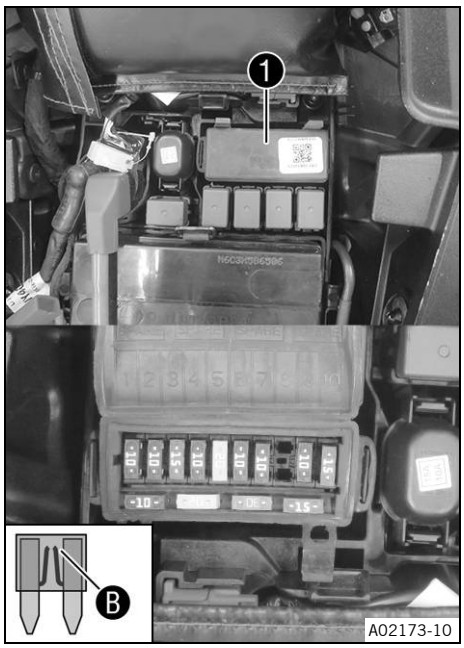

– Open fuse box cover ❶.
– Remove the faulty fuse.

Fuse **1**- 10 A - combination instrument, brake light, high beam, tail light
Fuse **2** - 10 A - combination instrument
Fuse **3** - 15 A - main relay
Fuse **4** - 10 A - start auxiliary relay, horn
Fuse **5** - 20 A - radiator fan
Fuse **6** - 10 A - headlight unit, parking light, license plate lamp
Fuse **7** - 10 A - engine control unit, ABS control unit, Connectivity Unit
Fuse **8** - not assigned
Fuse **9** - 10 A - permanent positive for accessories (ACC1)
Fuse **10** - 10 A - ignition positive for accessories (ACC2), USB
Fuse **SPARE** - 10 A/15 A/20 A/30 A - spare fuses

Note
A faulty fuse has a burned-out fuse wire Ⓑ.

– Insert the spare fuse with the correct rating.

Fuse (75011088010)
Fuse (75011088015)
Fuse (75011088020)
Fuse (75011088030)

Tip
Put a spare fuse in the fuse box so that it is available if needed.

– Check the function of the electrical power consumer.
– Close the fuse box cover ❶.

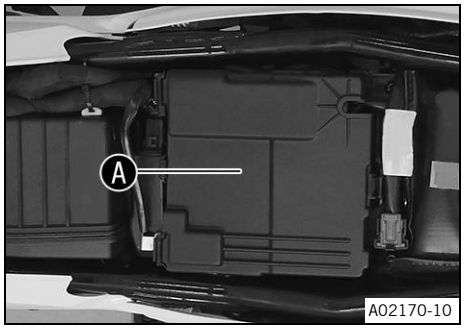

– Install battery cover Ⓐ.

Reworking

– Mount the seat. (p. 88)

16.7 Checking the headlight setting

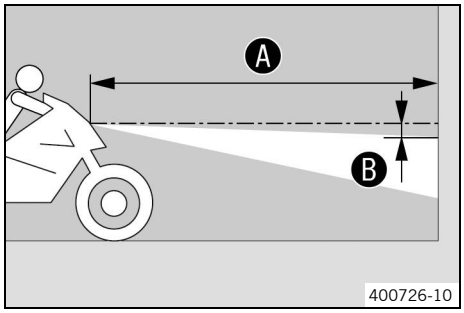

– Park the vehicle on a horizontal surface in front of a light-colored wall and make a mark at the height of the center of the low beam headlight.
– Make another mark at a distance B under the first marking.

Distance B	5 cm (2.0 in)

– Position the vehicle upright at distance A from the wall and switch on the low beam.

Distance A	5 m (16 ft – 5 in)

– Get on the motorcycle, together with any luggage or passenger.
– Check the headlight adjustment.

The light-dark boundary must lie exactly on the lower marking when the motorcycle is ready to operate with the rider mounted along with any luggage and a passenger if applicable.

» If the boundary between light and dark does not meet specifications:
  – Adjust headlight range. (p. 126)

16.8 Adjusting the headlight range

Preparatory work

– Check the headlight setting. (p. 126)

Main work

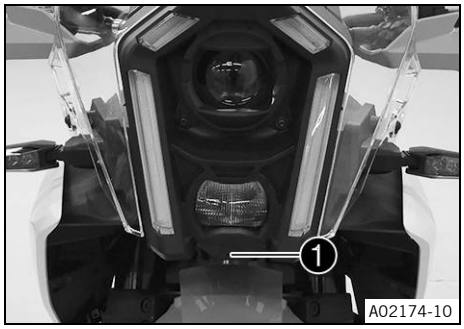

– Turn adjusting screw 1 to adjust the headlight range.

Screw 1 also secures the headlight. Ensure the screw is always screwed in far enough.

Note

Turn clockwise to increase the headlight range; turn counterclockwise to reduce the headlight range.

If you have a load, you may have to correct the headlight range.

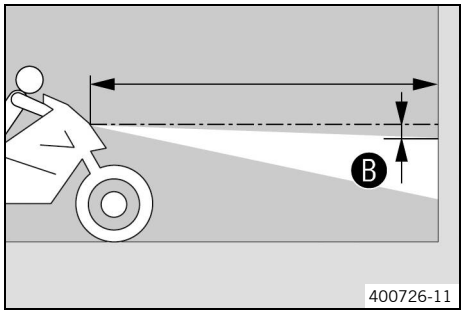

– Set the headlight to marking B.

The light-dark boundary must lie exactly on lower marking B when the motorcycle is ready to operate with the rider mounted along with any luggage and a passenger if applicable.

16.9 Diagnostic connector

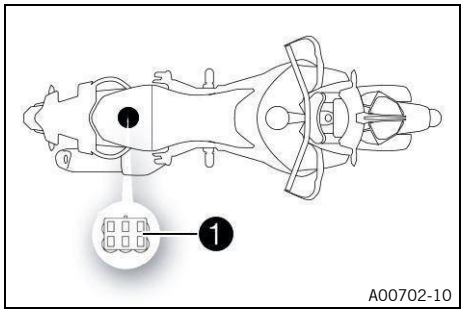

Diagnostics connector ❶ is located under the seat.

A diagnostic adapter for connection to a cross-manufacturer diagnostic interface has been connected at the factory.

Note

Unplug the diagnostics adapter to use the diagnostic tool.

Following completion of the diagnosis, plug the diagnostics adapter back in.

16.10 Front ACC1 and ACC2

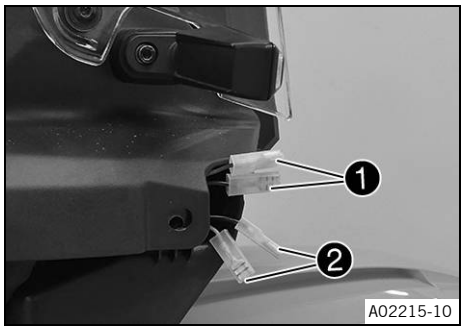

Installation location

- The ACC1 ❶ and ACC2 ❷ front power supplies are located behind the right headlight cover.

Note

The fuel tank fairing on the right must be removed.

The ACC1 and ACC2 front power supplies can be accessed under the right headlight cover.

16.11 Rear ACC1 and ACC2

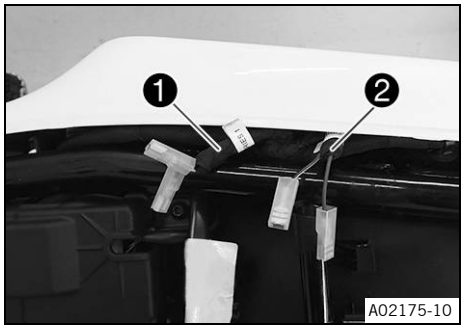

Installation location

- Power supplies ACC1 ❶ and ACC2 ❷ rear are located under the right rear fairing.

17.1 Cooling system

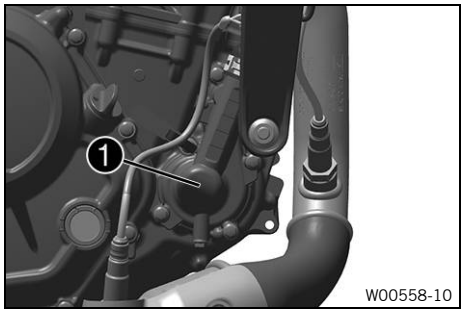

Water pump ❶ in the engine circulates the coolant.

The pressure resulting from the warming of the cooling system is regulated by a valve in radiator cap ❷. Heat expansion causes excess coolant to flow into compensating tank ❸. When the temperature falls, this surplus coolant is sucked back into the cooling system. This ensures that operating the vehicle at the specified coolant temperature will not result in a risk of malfunctions.

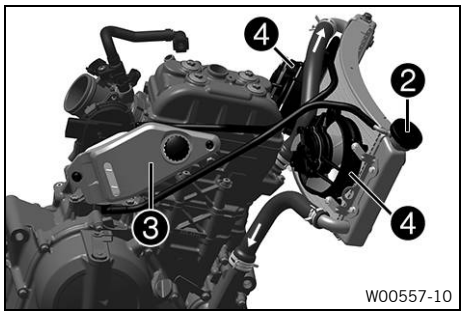

The coolant is cooled by the air stream and two radiator fans ❹, which are activated at high temperature.

The lower the vehicle speed, the lower the cooling effect. Dirty cooling fins also reduce the cooling effect.

Note

If the cooling system overheats, the maximum engine speed is limited.

17.2 Checking the frost protection and coolant level

WARNING

Health hazard Coolant is harmful to health.

- Keep coolant out of the reach of children.
- Do not allow coolant to come into contact with skin, eyes, or clothing.
- Consult a doctor immediately if coolant has been ingested.
- Rinse the affected area immediately with plenty of water in the event of contact with skin.
- Rinse eyes thoroughly with water and consult a doctor immediately if coolant comes into contact with eyes.
- If coolant spills on to your clothing, change the clothing.
- Store coolant properly in a suitable container and keep out of the reach of children.

WARNING

Danger of scalding The coolant heats up and is under high pressure when the vehicle is operated.

- Do not open the radiator, the radiator hoses, or other cooling system components if the engine or the cooling system are at operating temperature.
- Allow the cooling system and the engine to cool down before you open the radiator, the radiator hoses, or other components of the cooling system.
- In the event of scalding, rinse the area affected immediately with lukewarm water.

Condition: The engine is cold

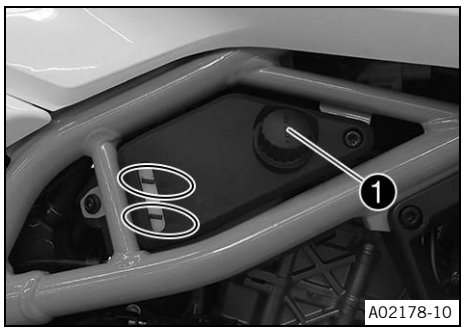

– Stand the motorcycle upright on a level surface.
– Remove cap ❶ of the compensating tank.
– Check the frost protection in the coolant.

−45 °C … −25 °C (−49.0 °F … −13.0 °F)

» If the frost protection in the coolant does not match the specified value:
  – Correct the frost protection in the coolant.

– Check the coolant level in the compensating tank.

The coolant level must be between the two markings.

» If the coolant level does not meet the specifications:
  – Correct the coolant level.

coolant	
Coolant (p. 168) Antifreeze protection to at least: −25 °C (−13.0 °F)	1.2 l (0.32 liq. gal_{US})

– Mount the cap of the compensating tank.

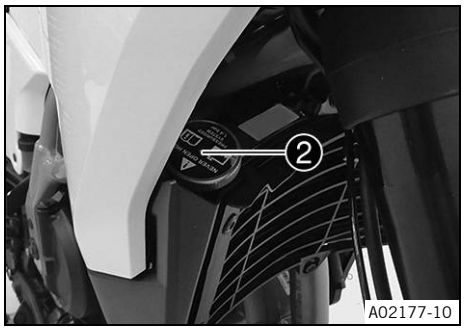

– Remove radiator cap ❷.
– Check the frost protection in the coolant.

−45 °C … −25 °C (−49.0 °F … −13.0 °F)

» If the frost protection in the coolant does not match the specified value:
  – Correct the frost protection in the coolant.

– Check the coolant level in the radiator.

The radiator must be filled completely.

» If the coolant level does not meet the specifications:
  – Check the coolant level and the reason for the loss.

coolant	
Coolant (p. 168) Antifreeze protection to at least: −25 °C (−13.0 °F)	1.2 l (0.32 liq. gal_{US})

» If you had to add more coolant than the specified amount:
  > 0.20 l
  (> 0.053 liq. gal_{US})
  – Fill/bleed the cooling system. (p. 131)

– Mount the radiator cap.

17.3 Checking the coolant level

WARNING

Health hazard Coolant is harmful to health.

- Keep coolant out of the reach of children.
- Do not allow coolant to come into contact with skin, eyes, or clothing.
- Consult a doctor immediately if coolant has been ingested.
- Rinse the affected area immediately with plenty of water in the event of contact with skin.
- Rinse eyes thoroughly with water and consult a doctor immediately if coolant comes into contact with eyes.
- If coolant spills on to your clothing, change the clothing.
- Store coolant properly in a suitable container and keep out of the reach of children.

WARNING

Danger of scalding The coolant heats up and is under high pressure when the vehicle is operated.

- Do not open the radiator, the radiator hoses, or other cooling system components if the engine or the cooling system are at operating temperature.
- Allow the cooling system and the engine to cool down before you open the radiator, the radiator hoses, or other components of the cooling system.
- In the event of scalding, rinse the area affected immediately with lukewarm water.

Condition: The engine is cold

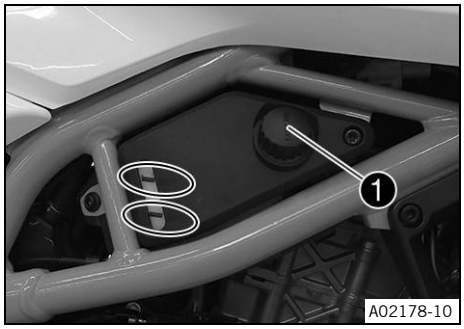

- Stand the motorcycle upright on a level surface.
- Check the coolant level in compensating tank ❶.

The coolant level must be between the two markings.

» If the coolant level does not meet the specifications:
  - Correct the coolant level.

coolant	
Coolant (p. 168) Antifreeze protection to at least: −25 °C (−13.0 °F)	1.2 l (0.32 liq. gal_{US})

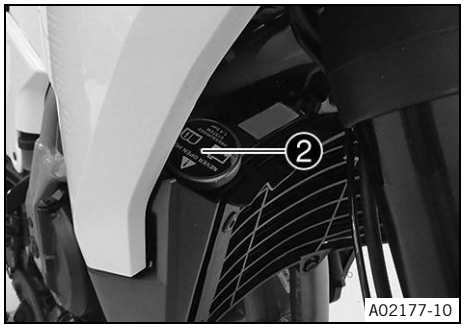

- Remove radiator cap ❷ and check the coolant level in the radiator.

The radiator must be filled completely.

» If the coolant level does not meet the specifications:
  - Check the coolant level and the reason for the loss.

» If you had to add more coolant than the specified amount:
  > 0.20 l
  (> 0.053 liq. gal_{US})
  - Fill/bleed the cooling system. (p. 131)

- Mount the radiator cap.

17.4 Draining the coolant

WARNING

Health hazard Coolant is harmful to health.

- Keep coolant out of the reach of children.
- Do not allow coolant to come into contact with skin, eyes, or clothing.
- Consult a doctor immediately if coolant has been ingested.
- Rinse the affected area immediately with plenty of water in the event of contact with skin.
- Rinse eyes thoroughly with water and consult a doctor immediately if coolant comes into contact with eyes.
- If coolant spills on to your clothing, change the clothing.
- Store coolant properly in a suitable container and keep out of the reach of children.

WARNING

Danger of scalding The coolant heats up and is under high pressure when the vehicle is operated.

- Do not open the radiator, the radiator hoses, or other cooling system components if the engine or the cooling system are at operating temperature.
- Allow the cooling system and the engine to cool down before you open the radiator, the radiator hoses, or other components of the cooling system.
- In the event of scalding, rinse the area affected immediately with lukewarm water.

Condition: The engine is cold

Preparatory work

- Remove the skid plate. (p. 98)

Main work

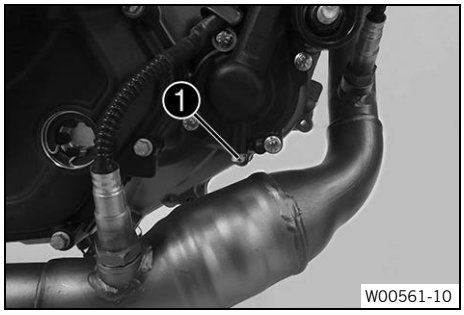

- Stand the motorcycle upright.
- Position an appropriate container under the engine.
- Remove screw ❶ with the sealing ring.
- Remove the radiator cap.
- Completely drain the coolant.
- Mount screw ❶ with the new sealing ring and tighten.

Screw plug, water pump drain hole	
M6	11 Nm (8.1 ft·lb$_f$)

17.5 Filling/bleeding the cooling system

WARNING

Health hazard Coolant is harmful to health.

- Keep coolant out of the reach of children.
- Do not allow coolant to come into contact with skin, eyes, or clothing.
- Consult a doctor immediately if coolant has been ingested.
- Rinse the affected area immediately with plenty of water in the event of contact with skin.
- Rinse eyes thoroughly with water and consult a doctor immediately if coolant comes into contact with eyes.
- If coolant spills on to your clothing, change the clothing.
- Store coolant properly in a suitable container and keep out of the reach of children.

Main work

– Remove radiator cap ❶.

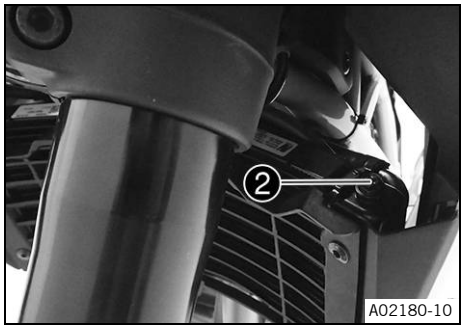

– Loosen bleeder screw ❷.

3 turns (1,080°)

– Tilt the vehicle slightly to the right.
– Pour in the coolant until it emerges without bubbles at the bleeder screw, and then mount and tighten the bleeder screw immediately.

coolant	
Coolant (p. 168) Antifreeze protection to at least: −25 °C (−13.0 °F)	1.2 l (0.32 liq. gal_{US})

– Completely fill the radiator with coolant. Mount the radiator cap.
– Rest the vehicle on the side stand.

DANGER

Danger of poisoning Exhaust gases are toxic and inhaling them may result in unconsciousness and death.

– Always ensure that there is sufficient ventilation when running the engine.
– Use suitable exhaust extraction when starting or running the engine in an enclosed space.

– Start the engine and allow it to warm up.
– Stop the engine and allow it to cool down.
– When the engine is cool, check the coolant level in the radiator and, if necessary, add coolant.

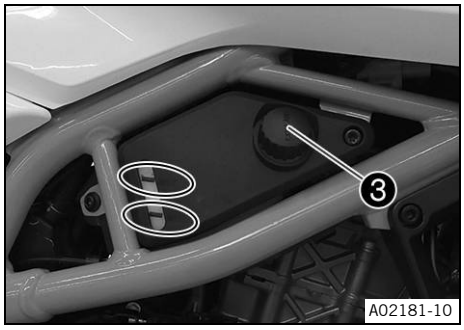

– Remove cap ❸ of the compensating tank and top up the coolant level to the upper marking.
– Mount the cap of the compensating tank.

Reworking

– Install the skid plate. (p. 98)

17.6 Changing the coolant

WARNING

Health hazard Coolant is harmful to health.

– Keep coolant out of the reach of children.
– Do not allow coolant to come into contact with skin, eyes, or clothing.
– Consult a doctor immediately if coolant has been ingested.
– Rinse the affected area immediately with plenty of water in the event of contact with skin.
– Rinse eyes thoroughly with water and consult a doctor immediately if coolant comes into contact with eyes.
– If coolant spills on to your clothing, change the clothing.
– Store coolant properly in a suitable container and keep out of the reach of children.

WARNING

Danger of scalding The coolant heats up and is under high pressure when the vehicle is operated.

– Do not open the radiator, the radiator hoses, or other cooling system components if the engine or the cooling system are at operating temperature.
– Allow the cooling system and the engine to cool down before you open the radiator, the radiator hoses, or other components of the cooling system.
– In the event of scalding, rinse the area affected immediately with lukewarm water.

Condition: The engine is cold

Preparatory work

– Remove the skid plate. (p. 98)

Main work

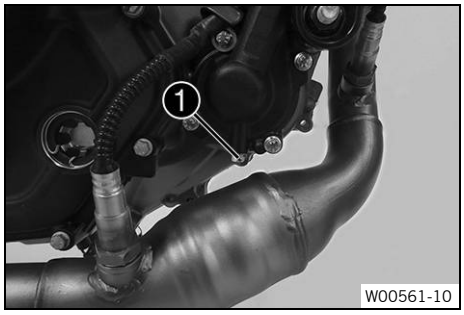

– Stand the motorcycle upright.
– Position an appropriate container under the engine.
– Remove screw ❶ with the sealing ring.

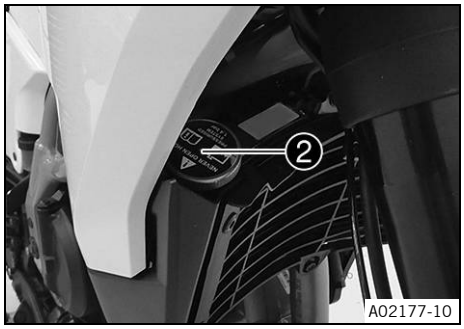

– Remove radiator cap ❷.
– Completely drain the coolant.
– Mount screw ❶ with the new sealing ring and tighten.

Screw plug, water pump drain hole	
M6	11 Nm (8.1 ft·lb$_f$)

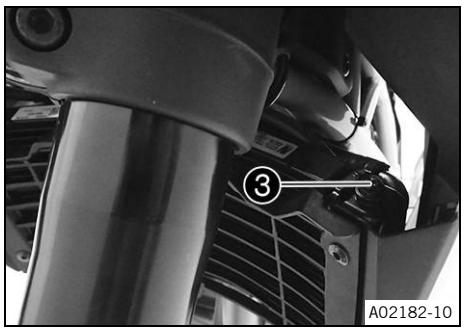

– Loosen bleeder screw ❸.

3 turns (1,080°)

– Tilt the vehicle slightly to the right.
– Pour in the coolant until it emerges without bubbles at the bleeder screw, and then mount and tighten the bleeder screw immediately.

coolant	
Coolant (p. 168) Antifreeze protection to at least: −25 °C (−13.0 °F)	1.2 l (0.32 liq. gal_{US})

– Completely fill the radiator with coolant. Mount the radiator cap.
– Rest the vehicle on the side stand.

DANGER

Danger of poisoning Exhaust gases are toxic and inhaling them may result in unconsciousness and death.

– Always ensure that there is sufficient ventilation when running the engine.
– Use suitable exhaust extraction when starting or running the engine in an enclosed space.

– Start the engine and allow it to warm up.

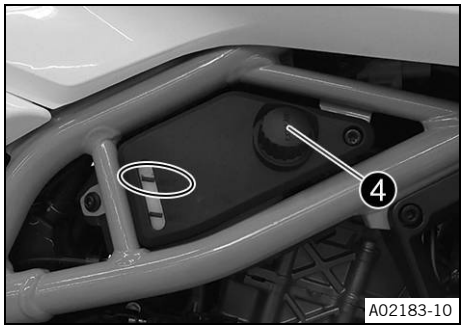

– Stop the engine and allow it to cool down.
– When the engine is cool, check the coolant level in the radiator and, if necessary, add coolant.
– Remove cap ❹ of the compensating tank and top up the coolant level up to the **MAX** marking.
– Mount the cap of the compensating tank.

Reworking

– Install the skid plate. (p. 98)

18.1 Ride Mode

I01342-01

Condition	Meaning
Street	Homologated performance with direct responsiveness; the motorcycle traction control allows standard slip on the rear wheel.
Rain	Reduced homologated performance for better ridability; the motorcycle traction control allows less slip on the rear wheel.
Offroad	Homologated performance with very direct response; the motorcycle traction control allows greater slip on the rear wheel.

WARNING

Danger of accidents An incorrectly selected ride mode makes it more difficult to control the vehicle.

The riding modes are each only suitable for certain conditions.

– Always select a riding mode that suits the surface on which you are riding, the weather and the riding situation.

Various vehicle tunings (**Street**, **Rain** and **Offroad**) can be selected in the dashboard in submenu **Ride Mode**.

The most recently selected ride mode appears on the display.

The riding mode can also be changed while riding with the throttle grip closed.

18.2 Motorcycle traction control (optional)

The motorcycle traction control (**MTC**) (optional) lowers the engine torque in case of loss of traction in the rear wheel. Depending on the riding mode (p. 135), different amounts of slip are allowed when traction control is activated.

Note

When motorcycle traction control is switched off, the rear wheel may spin during strong acceleration and on surfaces with low grip, resulting in a risk of falling.

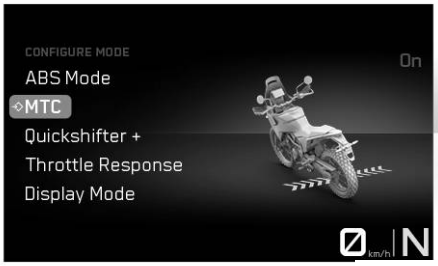

I01356-01

In the combination instrument, the motorcycle traction control can be switched on or off via the **MTC** submenu (optional).

Note

When the motorcycle traction control is active, the TC indicator lamp flashes.

When motorcycle traction control is switched off, the TC indicator lamp lights up.

18.3 Checking the play in the clutch lever

NOTE

Clutch damage If there is no free travel by the clutch lever, the clutch will slip.

– Check the free travel of the clutch lever each time before using the vehicle.
– Adjust the free travel of the clutch lever when necessary in accordance with the specification.

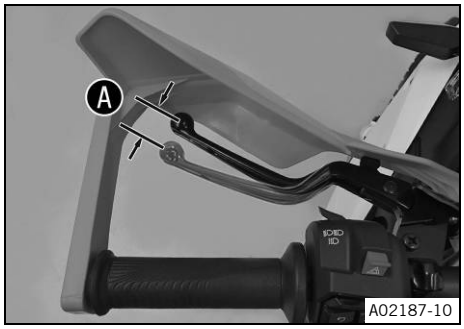

– Check the clutch lever for smooth operation.
– Move the handlebar to the straight-ahead position.
– Pull the clutch lever until resistance is perceptible, and determine the play in the clutch lever Ⓐ.

Clutch lever play Ⓐ	1 mm … 3 mm (0.04 in … 0.12 in)

» If the play in the clutch lever does not meet the specified value:
  – Adjust play in the clutch lever. (p. 136)

– Move the handlebar back and forth over the entire steering range.

The clutch lever play must not change.

» If the clutch lever play changes:
  – Check the routing of the clutch cable.

18.4 Adjusting play in the clutch lever

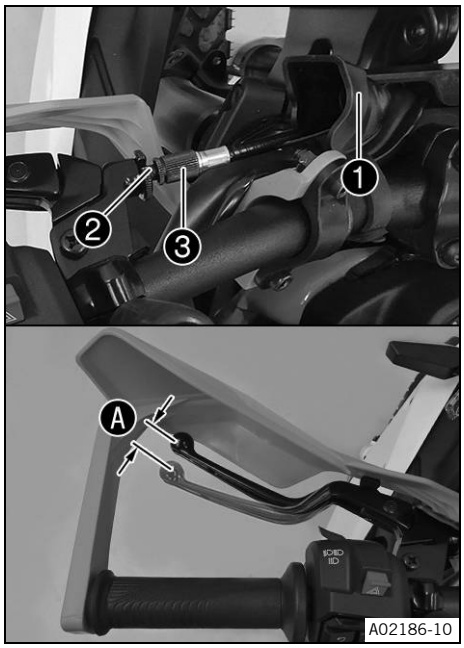

– Move the handlebar to the straight-ahead position.
– Push back boot ❶.
– Loosen lock nut ❷.
– Adjust the play in the clutch level Ⓐ by turning adjusting screw ❸.

Clutch lever play Ⓐ	1 mm … 3 mm (0.04 in … 0.12 in)

– Tighten lock nut ❷.
– Position bellows ❶.

19.1 Checking the engine oil level

Note
Oil consumption depends on the riding style and the operating conditions.

Condition: The engine is at operating temperature

Preparatory work
– Stand the motorcycle upright on a level surface.

Main work
– Check the engine oil level.

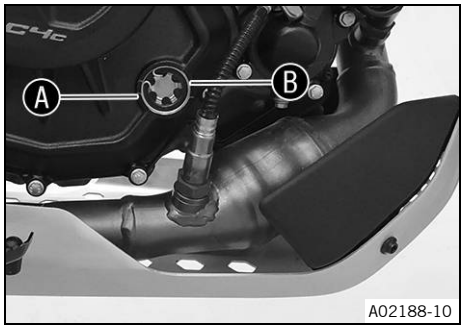

The engine oil must be between the Ⓐ and Ⓑ markings .
After switching off the engine, wait one minute before checking the level.

» When the engine oil level is below the Ⓐ marking:
  – Add engine oil. (p. 139)
» When the engine oil level is above the Ⓑ marking:
  – Correct the engine oil level.

19.2 Changing the engine oil and oil filter, cleaning the oil screens

WARNING
Danger of scalding Engine and gear oil heat up when the motorcycle is operated.
– Wear suitable protective clothing and safety gloves.
– In the event of scalding, rinse the area affected immediately with lukewarm water.

NOTE
Environmental hazard Hazardous substances cause environmental damage.
– Dispose of oils, grease, filters, fuel, cleaning agents, brake fluid, etc. correctly and in accordance with the applicable regulations.

Condition: The engine is at operating temperature

Preparatory work
– Remove the skid plate. (p. 98)
– Stand the motorcycle on a level surface using the side stand.

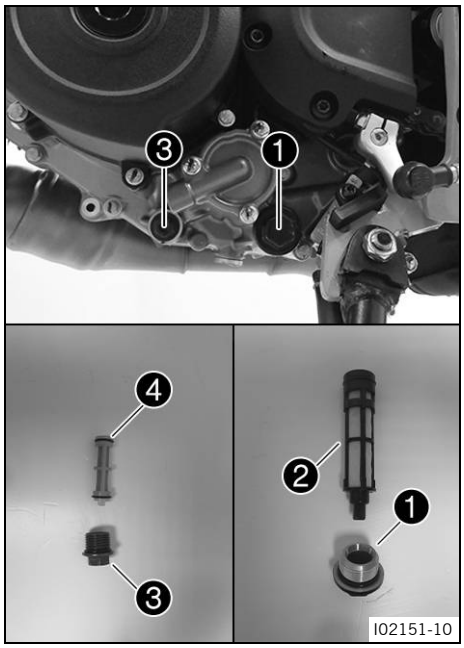

Main work

- Place an appropriate container under the engine.
- Remove screw plug ❶ with O-ring.
- Remove oil screen ❷ with the O-ring.
- Remove screw plug ❸ with oil screen ❹.
- Allow the engine oil to drain completely.
- Thoroughly clean the screw plug and oil screen.
- Position oil screen ❷ and mount and tighten screw plug ❶ with the O-ring.

Oil screen screw plug, large	
M24×1.5	11 Nm (8.1 ft·lb$_f$)

- Mount and tighten screw plug ❸ with oil screen ❹ and the O-ring.

Oil screen screw plug, small	
M17×1.5	11 Nm (8.1 ft·lb$_f$)

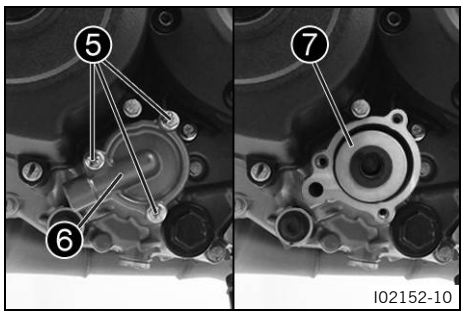

- Remove screws ❺.
- Take off oil filter cover ❻ with the O-ring.
- Pull oil filter ❼ out of the oil filter housing.
- Allow the engine oil to drain completely.
- Thoroughly clean the parts and the sealing surface.

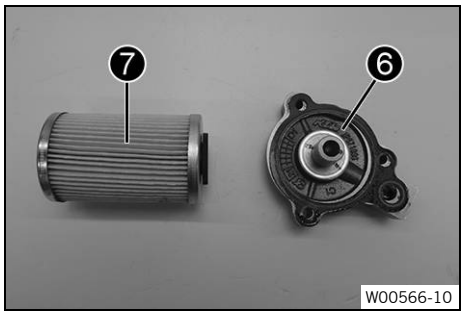

- Insert new oil filter ❼.
- Oil the O-ring of the oil filter cover.
- Mount oil filter cover ❻.
- Mount and tighten the screws.

Screw, oil filter cover	
M6	11 Nm (8.1 ft·lb$_f$)

Note
Too little engine oil or poor-quality engine oil will result in premature wear of the engine.

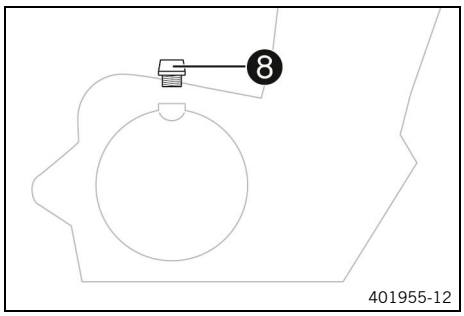

– Remove filler plug ❽ with the O-ring, and fill up with engine oil.

engine oil	
engine oil (SAE 15W/50) (p. 167) fully synthetic	1.5 l (0.40 liq. gal_{US})

– Mount and tighten the oil plug together with the O-ring.

DANGER

Danger of poisoning Exhaust gases are toxic and inhaling them may result in unconsciousness and death.

– Always ensure that there is sufficient ventilation when running the engine.
– Use suitable exhaust extraction when starting or running the engine in an enclosed space.

– Start the engine and check it for leaks.

Reworking

– Check the engine oil level. (p. 137)
– Install the skid plate. (p. 98)

19.3 Adding engine oil

Note

Too little engine oil or poor-quality engine oil will result in premature wear of the engine.

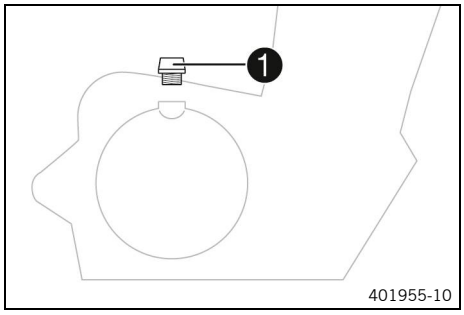

Main work

– Remove filler plug ❶ with the O-ring, and fill up with engine oil.

engine oil (SAE 15W/50) (p. 167) fully synthetic

Note

In order to achieve optimal engine oil performance, it is not advisable to mix different engine oils.

KTM recommends changing the engine oil if necessary.

– Mount and tighten the oil plug together with the O-ring.

DANGER

Danger of poisoning Exhaust gases are toxic and inhaling them may result in unconsciousness and death.

– Always ensure that there is sufficient ventilation when running the engine.
– Use suitable exhaust extraction when starting or running the engine in an enclosed space.

– Start the engine and check it for leaks.

Reworking

– Check the engine oil level. (p. 137)

20.1 Cleaning the motorcycle

NOTE

Material damage Components can be damaged or destroyed if a high-pressure cleaner is used incorrectly.

The high pressure forces water into the electrical components, socket connectors, clutch cables, and bearings, etc.

Too high a pressure can cause malfunctions and destroy components.

– Do not direct the water jet directly on to electrical components, socket connectors, clutch cables, or bearings.
– Maintain a minimum distance between the nozzle of the high-pressure cleaner and the component.

Minimum distance	60 cm (23.6 in)

NOTE

Environmental hazard Hazardous substances cause environmental damage.

– Dispose of oils, grease, filters, fuel, cleaning agents, brake fluid, etc. correctly and in accordance with the applicable regulations.

Note

Clean the motorcycle regularly to maintain its value and appearance over a long period.

Avoid direct sunshine when cleaning the motorcycle.

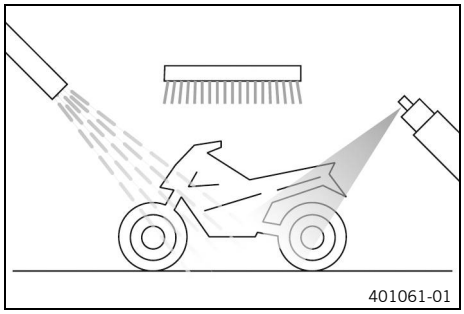

– Seal the exhaust system to prevent water from entering into it.
– Remove loose dirt first with a soft jet of water.
– Spray the heavily soiled parts with a standard commercial motorcycle cleaner and clean using a brush.

Never apply motorcycle cleaner to a dry vehicle; always rinse the vehicle with water first.

Environmentally neutral universal cleaning agent
(p. 169)

Note

Use warm water containing standard motorcycle cleaner and a soft sponge.

Clean the motorcycle with cold water if it has been used on salted roads. Warm water enhances the corrosive effects of salt.

– After rinsing the motorcycle with a gentle spray of water, allow it to dry thoroughly.
– Remove the cover from the exhaust system.

WARNING

Danger of accidents Moisture and dirt impair the brake system.

– Brake carefully several times to dry out and remove dirt from the brake pads and the brake discs.

– After cleaning, ride the vehicle a short distance until the engine warms up.

Note
The heat produced causes water to evaporate at inaccessible locations in the engine and on the brake system.

– Push back the sleeves of the handlebar controls to allow any water that has penetrated to evaporate.
– After the motorcycle has cooled off, lubricate all moving parts and pivot points.
– Clean the chain. (p. 89)
– Treat bare metal (except for brake discs and the exhaust system) with an anticorrosive.

  Preserving materials (p. 169)

– Treat all painted parts with a mild paint care product.

  Do not polish parts that were matte when delivered as this would strongly impair the material quality.

  Shine spray with beading effect (p. 169)

– Treat all plastic parts and powder-coated parts with a mild cleaning and care product.

  Cleaning agents for plastics, glass, lacquers, metals, windshields and visors (p. 169)

– Lubricate the ignition and steering lock.

  Universal oil spray (p. 167)

20.2 Checks and maintenance steps for winter operation

WARNING
Danger of accidents Salt on the roads impairs the brake system.
– Brake carefully several times to remove salt from the brake linings and the brake discs.

WARNING
Danger of accidents Oil, grease or wax on the brake discs reduces the brake action.
– Always keep the brake discs free of oil, fat and wax.
– Clean the brake discs with brake cleaner when necessary.

Note
If you use the motorcycle in winter, you must expect salt on the roads. You should therefore take precautions against aggressive road salt.

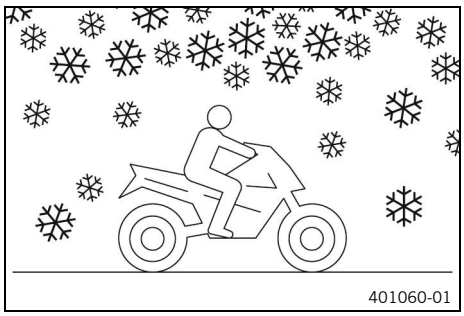

– Clean the motorcycle. (p. 141)
– Clean the brakes.

After every trip on salted roads, thoroughly wash the brake calipers and brake pads with cold water and dry carefully. This should be done after the parts are cooled down and while they are installed.
After riding on salted roads, thoroughly clean the vehicle with cold water and dry it well.

Note
Warm water enhances the corrosive effects of salt.

– Treat the engine, swingarm, and all other bare or zinc-plated parts (except the brake discs) with a wax-based anticorrosive.

Corrosion inhibitor must not come in contact with the brake discs as this would greatly reduce the braking force.

– Clean the chain. (p. 89)

21.1 Storage

Note
If the vehicle will not be ridden for an extended period, additional steps are recommended.
Before storing the motorcycle, check all parts for function and wear. If service, repairs, or replacements are necessary, you should do this during the storage period (less overload of the authorized partner). This allows you to avoid long waiting periods at the start of the season.

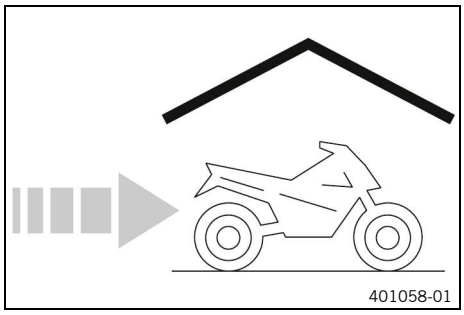

– When refueling for the last time before taking the motorcycle out of service, add fuel additive.

Fuel additive (p. 166)

– Refuel. (p. 78)

Tip
Fill the fuel tank completely as specified, using fuel with the lowest possible ethanol content.

– Clean the motorcycle. (p. 141)
– Change the engine oil and the oil filter, clean the oil screens. (p. 137)
– Check the frost protection and coolant level. (p. 128)
– Check the tire pressure. (p. 116)
– Remove the 12 V battery. (p. 118)
– Charge the 12 V battery. (p. 119)

Storage temperature of the 12 V battery without direct sunlight	0 °C ... 35 °C (32.0 °F ... 95.0 °F)

– Store the vehicle in a dry location that is not subject to large fluctuations in temperature.

Note
KTM recommends jacking up the motorcycle.

– Raise the motorcycle with the rear lifting gear. (p. 85)
– Lift the motorcycle with the front lifting gear. (p. 85)

Cover the motorcycle with a tarp or cover that is permeable to air.
Do not use non-porous materials because they prevent humidity from escaping and thus cause corrosion.

Note
Avoid running the engine of a motorcycle in storage for a short time only. Since the engine cannot warm up properly, the water vapor produced during combustion condenses and causes valves and the exhaust system to rust.

21.2 Preparing for use after storage

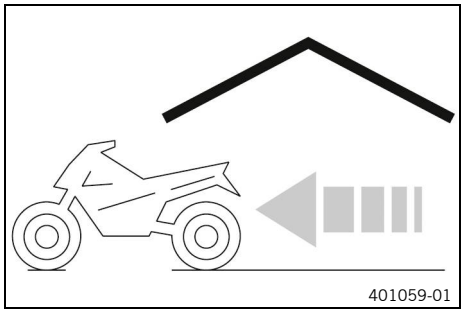

- Take the motorcycle off the front lifting gear. (p. 86)
- Remove the rear of the motorcycle from the lifting gear. (p. 85)
- Install the 12 V battery. (p. 119)
- Set the time and date. (p. 58)
- Perform checks and maintenance measures when preparing for use. (p. 70)
- Take a test ride.

22.1 troubleshooting

Cause	Finding	Remedy
The engine does not turn over when the start button is actuated	Operating error 12 V battery discharged Main fuse or fuse **3**, **4** or **7** blown No ground connection present on the starter motor	– Carry out the starting procedure. (p. 70) – Charge the 12 V battery. (p. 119) – Change the fuses of individual electrical power consumers. (p. 124) – Change the main fuse. (p. 121) – Check the ground connection.
The engine only turns over if the clutch lever is pulled	The vehicle is in gear The vehicle is in gear and the side stand is folded out	– Shift the transmission into the neutral position. – Shift the transmission into the neutral position.
The engine turns but does not start	Operating error Quick-lock coupling not joined Malfunction in the electronic fuel injection	– Carry out the starting procedure. (p. 70) – Join quick-lock couplings. – Read out the fault memory using the diagnostics tool.
Engine has too little power	Air filter is very dirty Fuel filter is very dirty Malfunction in the electronic fuel injection	– Change the air filter. – Check the fuel pressure. – Read out the fault memory using the diagnostics tool.
Engine overheats	Too little coolant in cooling system Radiator fins very dirty Foam formation in the cooling system Thermostat defective Fuse **5** blown Defect in radiator fan system	– Check the transmission and cooling system for leaks. – Check the coolant level. (p. 130) – Clean the radiator fins. – Drain the coolant. (p. 131) – Fill/bleed the cooling system. (p. 131) – Check the thermostat. – Change the fuses of individual electrical power consumers. (p. 124) – Check the radiator fan system.
The malfunction indicator light lights up yellow	Malfunction in the electronic fuel injection	– Read out the fault memory using the diagnostics tool.
The engine dies during the trip	Lack of fuel Main fuse or fuse **3**, **4** or **7** blown	– Refuel. (p. 78) – Change the fuses of individual electrical power consumers. (p. 124) – Change the main fuse. (p. 121)
The ABS warning light lights up	ABS fuse blown Large difference in wheel speeds of the front and rear wheels Malfunction in ABS	– Change the ABS fuses. (p. 122) – Stop the vehicle, switch off the ignition, and start it again. – Read out the ABS fault memory using the diagnostic tool.
High oil consumption	Engine vent hose bent The engine oil level is too high	– Route the vent hose without bends or change it if necessary.

Cause	Finding	Remedy
	The engine oil is too thin (low viscosity)	– Check the engine oil level. (p. 137) – Change the engine oil and the oil filter, clean the oil screens. (p. 137)
Headlight and position light are not functioning	Fuse **6** blown	– Change the fuses of individual electrical power consumers. (p. 124)
Turn signal, brake light, and horn are not functional	Fuse **4** or **6** blown	– Change the fuses of individual electrical power consumers. (p. 124)
Time is not displayed or not correctly displayed	Fuse **2** blown	– Change the fuses of individual electrical power consumers. (p. 124)
12 V battery discharged	Ignition was not switched off when vehicle was parked The 12-V battery is not being charged by the alternator	– Charge the 12 V battery. (p. 119) – Check the charging voltage. – Check the open-circuit current.
The dashboard shows nothing on the display	Fuse **2** blown	– Change the fuses of individual electrical power consumers. (p. 124)
Speedometer in combination instrument is not functioning	Speedometer wiring harness is damaged or plug-in connector is oxidized	– Check the wiring harness and plug-in connector.

23.1 Engine

23.1.1 Technical data - engine

Design	1-cylinder 4-stroke engine, water-cooled
Displacement	398 cm³ (24.29 in³)
Stroke	64 mm (2.52 in)
Bore	89 mm (3.50 in)
Compression ratio	12.59:1
Control	DOHC, four valves controlled via cam lever, chain drive
Valve diameter, intake	36 mm (1.42 in)
Valve diameter, exhaust	29 mm (1.14 in)
Valve clearance, intake, cold	0.10 mm … 0.15 mm (0.0039 in … 0.0059 in)
Valve clearance, exhaust, cold	0.15 mm … 0.20 mm (0.0059 in … 0.0079 in)
Crankshaft bearing	Slide bearing
Big (bottom) end bearing	Slide bearing
Piston	Forged aluminum
Piston rings	1 compression ring, 1 tapered compression piston ring, 1 oil scraper ring
Engine lubrication	Pressure circulation lubrication
Primary transmission	33:86
Clutch	Multi-disc clutch in oil bath
Transmission	Sixth-gear manual transmission
Gear ratios	
1st gear	12:32
2nd gear	14:26
3rd gear	19:27
4th Gear	21:24
5th Gear	23:22
6th gear	25:21
Mixture formation	Electronic fuel injection
Ignition system	Fully electric ignition
Alternator	• 12 V • 230 W (0.308 hp)
Spark plug	**BOSCH VR6NEU**
Plug gap of spark plug	1 mm (0.04 in)
Cooling	Liquid cooling, permanent circulation of coolant by water pump

Idle speed	1,550 rpm … 1,650 rpm (25.83 Hz … 27.50 Hz)
Starting aid	Starter motor

23.1.2 Capacities - engine

engine oil	
engine oil (SAE 15W/50) (p. 167) fully synthetic	1.5 l (0.40 liq. gal_{US})
coolant	
Coolant (p. 168) Antifreeze protection to at least: −25 °C (−13.0 °F)	1.2 l (0.32 liq. gal_{US})

23.2 Chassis

23.2.1 Technical data - chassis

Frame	Lattice frame of steel tubes, powder-coated
Fork	**WP APEX 3343**
Shock absorber	**WP APEX 3446**
Brake system	
front	Disc brake with four-pot brake caliper
rear	Disc brake with single-pot brake caliper, floating
Suspension travel:	
front	229 mm (9.02 in)
rear	230 mm (9.06 in)
Brake discs - diameter	
front	320 mm (12.60 in)
rear	240 mm (9.45 in)
Brake disc wear limit	
front	4.5 mm (0.177 in)
rear	4.5 mm (0.177 in)
Tire pressure when solo	
front	2.0 bar (29.0 psi)
rear	2.0 bar (29.0 psi)
Tire pressure with passenger / full payload	
front	2.0 bar (29.0 psi)

rear	2.2 bar (31.9 psi)
Final drive	14:48
Chain	5/8 x 1/4” (520) X–ring
Steering head angle	62.5° (1.091 rad)
Wheelbase	1,481 mm (58.31 in)
Seat Height unloaded	871 mm (34.29 in)
Ground clearance unloaded	272 mm (10.71 in)
Weight without fuel approx.	165 kg (363.8 lb)
Maximum permissible front axle load	115.9 kg (255.52 lb)
Maximum permissible rear axle load	259.1 kg (571.22 lb)
Maximum permissible total weight	375 kg (826.7 lb)

23.2.2 Technical data - tires

Tire front	Rear tire
90/90 - 21 M/C 54T M+S TT Mitas Enduro Trail+	**140/80 - 18 M/C 70T M+S TT** Mitas Enduro Trail+
The tires specified represent one of the possible series production tires. For alternative manufacturers, if any, contact an authorized manufacturer or qualified tire dealership. If local road approval regulations apply, these and the respective technical specifications must be observed.	

23.2.3 Fuel

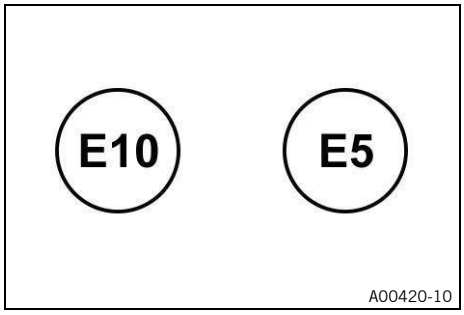

Please observe the labels on EU fuel pumps.

23.2.4 Capacities - vehicle

Total fuel tank capacity, approx.	
Super unleaded (ROZ 95) (p. 166)	14 l (3.7 liq. gal_{US})

Fuel reserve, approx.	
Super unleaded (ROZ 95) (p. 166)	2 l (0.5 liq. gal_{US})

23.3 Electrics

23.3.1 Battery

12 V battery	ETZ-9-BS	Battery voltage: 12 V Nominal capacity: 8 Ah Maintenance-free

23.3.2 Fuses

Fuse	75011088010	10 A
Fuse	75011088015	15 A
Fuse	75011088025	25 A
Fuse	75011088030	30 A

23.3.3 Lamps

Headlight	LED
Parking light	LED
Dashboard illumination and indicator lights	LED
Turn signal	LED
Brake/tail light	LED
License plate lighting	LED

23.4 Fork

23.4.1 Technical data - fork

Fork part number	A601C131Y201102

Fork	**WP APEX 3343**
Fork length	868 mm (34.17 in)
Compression damping	
Standard	15 clicks
Rebound damping	
Standard	15 clicks
Spring rate	
Medium (standard)	5.5 N/mm (31.41 lb_f/in)
Spring length with preload spacer(s)	482 mm (18.98 in)

23.4.2 Fork oil capacity

Fork oil per fork leg	
Fork oil (SAE 5) (p. 167)	500 ±5 ml (16.91 ±0.17 fl. oz_{US})

23.5 Shock absorber

23.5.1 Technical data - shock absorber

Shock absorber part number	A601C431Y313102

Shock absorber	**WP APEX 3446**
Preload	
Standard	8 mm (0.31 in)
Rebound damping	
Standard	15 clicks
Static sag	28.5 mm (1.122 in)
Riding sag	78 mm (3.07 in)
Spring rate	
Weight of rider: 75 kg … 85 kg (165.3 lb … 187.4 lb)	105 N/mm (599.6 lb_f/in)
Spring length	217.5 mm (8.563 in)
Installation position	351 mm (13.82 in)
Gas assisted	16 bar (232 psi)

23.5.2 Capacity of shock absorber oil

Shock absorber oil	
Shock absorber oil (50180751S1) (SAE 2.5) (p. 168)	Fill to half-full.

23.6 Tightening torque

23.6.1 Engine tightening torques

Screw, shift shaft sensor M5×0.8	6 Nm (4.4 ft·lb_f)
Oil nozzle M5×0.8	6 Nm (4.4 ft·lb_f) **Loctite® 243**
Oil spray jet, camshaft bridge M5×0.8	9 Nm (6.6 ft·lb_f) **Loctite® 243**

Screw, crankshaft position sensor M5×0.8	5.5 Nm (4.06 ft·lb_f) **Loctite® 243**
Stator screw M5×0.8	7.5 Nm (5.53 ft·lb_f) **Loctite® 243**
Screw, retaining bracket, stator cable M5×0.8	5.5 Nm (4.06 ft·lb_f) **Loctite® 243**
Screw, gear position sensor M5	5.5 Nm (4.06 ft·lb_f) **Loctite® 243**
Piston oil spray jet M5×0.8	5.5 Nm (4.06 ft·lb_f) **Loctite® 243**
Oil spray jet M5×0.8	6 Nm (4.4 ft·lb_f) **Loctite® 243**
Screw, oil filter cover M6	11 Nm (8.1 ft·lb_f)
Screw plug, water pump drain hole M6	11 Nm (8.1 ft·lb_f)
Nut, water pump impeller M6	8 Nm (5.9 ft·lb_f) **Loctite® 243**
Screw, clutch cover M6	11 Nm (8.1 ft·lb_f)
Screw, autodecompression mechanism M6	9 Nm (6.6 ft·lb_f) **Loctite® 243**
Screw, camshaft bearing bridge M6	9 Nm (6.6 ft·lb_f)
Screw, camshaft bearing bridge M6×35	9 Nm (6.6 ft·lb_f)
Screw, camshaft bearing bridge M6×40	9 Nm (6.6 ft·lb_f)
Screw, camshaft bearing bridge M6×45	9 Nm (6.6 ft·lb_f)
Screw, valve cover M6	11 Nm (8.1 ft·lb_f)
Screw, engine case M6×35	11 Nm (8.1 ft·lb_f) **Loctite® 243**
Screw, engine case M6×70	11 Nm (8.1 ft·lb_f) **Loctite® 243**

Screw, freewheel gear retaining bracket M6	11 Nm (8.1 ft·lb$_f$) **Loctite® 243**
Screw, ignition cover M6	11 Nm (8.1 ft·lb$_f$)
Shift star screw M6	11 Nm (8.1 ft·lb$_f$) **Loctite® 243**
Screw, engine vent plate M6	11 Nm (8.1 ft·lb$_f$)
Detent arm screw M6	11 Nm (8.1 ft·lb$_f$) **Loctite® 243**
Screw, water pump cover M6	11 Nm (8.1 ft·lb$_f$)
Screw, release for timing chain tensioner M6	8 Nm (5.9 ft·lb$_f$)
Screw, timing chain tensioner M6	11 Nm (8.1 ft·lb$_f$)
Screw, starter motor M6	11 Nm (8.1 ft·lb$_f$)
Screw, special nozzle retaining bracket M6×1	7 Nm (5.2 ft·lb$_f$) **Loctite® 243**
Screw, timing chain tensioning rail M6×1	11 Nm (8.1 ft·lb$_f$) **Loctite® 243**
Screw, oil pump cover M6×1	11 Nm (8.1 ft·lb$_f$)
Screw, thermostat M6	11 Nm (8.1 ft·lb$_f$)
Chain shaft screw, cylinder head M6	11 Nm (8.1 ft·lb$_f$)
Bracket for ignition coil cable M6	11 Nm (8.1 ft·lb$_f$)
Screw, inlet sleeve M6	9 Nm (6.6 ft·lb$_f$) **Loctite® 243**
Stud, exhaust flange M8	21 Nm (15.5 ft·lb$_f$)
Exhaust flange nut M8	21 Nm (15.5 ft·lb$_f$)
Screw, spring thrust bearing of the shift shaft M8×1.25	21 Nm (15.5 ft·lb$_f$) **Loctite® 243**
TDC locking screw, crankshaft M8×1.25	15.5 Nm (11.43 ft·lb$_f$) **Loctite® 243**

TDC locking screw, balancer shaft M8×1.25		15.5 Nm (11.43 ft·lb$_f$) **Loctite® 243**
Screw, intermediate gear M8×1.25		21 Nm (15.5 ft·lb$_f$) **Loctite® 243**
Screw, conrod bearing M9×1 Thread oiled	1.	17.7 Nm (13.05 ft·lb$_f$)
	2.	60° (1.05 rad)
Coolant temperature sensor M10×1.5		13 Nm (9.6 ft·lb$_f$)
Screw plug, cam lever shaft M10×1		9 Nm (6.6 ft·lb$_f$) **Loctite® 243**
Screw, cylinder head M10×1.25		62 Nm (45.7 ft·lb$_f$) Thread oiled
Oil pressure sensor M10×1		9 Nm (6.6 ft·lb$_f$)
Screw, camshaft gear wheel M10×1		42 Nm (31.0 ft·lb$_f$) **Loctite® 243**
Screw, rotor M12×1.5		125 Nm (92.2 ft·lb$_f$)
Spark plug M12×1.25		16 Nm (11.8 ft·lb$_f$)
Nut, primary gear wheel/timing chain sprocket M16×1.5		150 Nm (110.6 ft·lb$_f$) **Loctite® 243**
Nut, inner clutch hub M16LH×1.5		122.5 Nm (90.35 ft·lb$_f$) **Loctite® 243**
Oil pressure regulator valve M16×1.5		39 Nm (28.8 ft·lb$_f$)
Oil screen screw plug, small M17×1.5		11 Nm (8.1 ft·lb$_f$)
Screw plug, alternator cover TDC M18×1.5		9 Nm (6.6 ft·lb$_f$)
Nut, countershaft gear M18×1.5		95 Nm (70.1 ft·lb$_f$) **Loctite® 243**
Screw plug, alternator cover M24×1.5		11 Nm (8.1 ft·lb$_f$)
Oil screen screw plug, large M24×1.5		11 Nm (8.1 ft·lb$_f$)

23.6.2 Chassis tightening torques

Exhaust clamp	20 Nm (14.8 ft·lb$_f$)
Hose clamp, throttle valve housing	4 Nm (3.0 ft·lb$_f$)
Remaining screws on chassis M4	4 Nm (3.0 ft·lb$_f$)
Screw, fuel tank lid M5	5 Nm (3.7 ft·lb$_f$)
Remaining screws on chassis M5	5 Nm (3.7 ft·lb$_f$)
Screw, tail light M5	5 Nm (3.7 ft·lb$_f$)
Screw, rear wheel speed sensor M5	7 Nm (5.2 ft·lb$_f$)
Screw, outer clutch cable guide M5	5 Nm (3.7 ft·lb$_f$) **Loctite® 243**
Screw, compensating tank cap lock, rear brake M5	9 Nm (6.6 ft·lb$_f$)
Spoke nipple M5	4.5 Nm (3.32 ft·lb$_f$)
Screw, rear wheel speed sensor M5	7 Nm (5.2 ft·lb$_f$)
Screw, turn signal on turn signal bracket M5	5 Nm (3.7 ft·lb$_f$)
Screw, ABS sensor wheel front M5	7 Nm (5.2 ft·lb$_f$)
Screw, rear wheel speed sensor M5	7 Nm (5.2 ft·lb$_f$)
Spoke nipple M5	4.5 Nm (3.32 ft·lb$_f$)
Screw, side stand sensor M6	5 Nm (3.7 ft·lb$_f$)
Screw, fuel pump M6	9 Nm (6.6 ft·lb$_f$)
Side stand magnet holder screw M6	5 Nm (3.7 ft·lb$_f$) **Loctite® 243**
Screw, ABS hose clamp M6	7 Nm (5.2 ft·lb$_f$)
Screw, side stand sensor cable holder M6	9 Nm (6.6 ft·lb$_f$) **Loctite® 243**
Screw, wheel speed sensor holder M6	8 Nm (5.9 ft·lb$_f$)

Screw, bell crank shift lever M6	16 Nm (11.8 ft·lb$_f$)
Nut, foot brake lever adjustment M6	9 Nm (6.6 ft·lb$_f$)
Screw, foot brake cylinder M6	10 Nm (7.4 ft·lb$_f$)
Screw, rear splash protector M6	9 Nm (6.6 ft·lb$_f$)
Screw, chain slider guard M6	7 Nm (5.2 ft·lb$_f$)
Screw, rear brake reservoir M6	7 Nm (5.2 ft·lb$_f$)
Screw, radiator holder M6	10 Nm (7.4 ft·lb$_f$)
Screw, ignition coil M6	8 Nm (5.9 ft·lb$_f$)
Screw, tilt sensor M6	9 Nm (6.6 ft·lb$_f$)
Screw, front fender M6	6 Nm (4.4 ft·lb$_f$)
Screw, tank on frame front M6	11 Nm (8.1 ft·lb$_f$)
Screw, front seat fixing M6	6 Nm (4.4 ft·lb$_f$)
Screw, compensating tank M6	5 Nm (3.7 ft·lb$_f$)
License plate holder support screw M6	7 Nm (5.2 ft·lb$_f$)
Remaining screws on chassis M6	9 Nm (6.6 ft·lb$_f$)
Remaining nuts on chassis M6	15 Nm (11.1 ft·lb$_f$)
Screw, main silencer M6	11 Nm (8.1 ft·lb$_f$)
Screw, chain guard M6	5 Nm (3.7 ft·lb$_f$)
Screw, ABS module M6	7 Nm (5.2 ft·lb$_f$)
Screw, main silencer retaining bracket M6	9 Nm (6.6 ft·lb$_f$)
Screw, air filter box M6	6 Nm (4.4 ft·lb$_f$)
Screw, damper block M6	8 Nm (5.9 ft·lb$_f$)
Screw, ABS module retaining bracket on frame M6	7 Nm (5.2 ft·lb$_f$)

Screw, ignition lock (tamper-proof screw) M6	10 Nm (7.4 ft·lb$_f$)
Screw, radiator shield M6	8 Nm (5.9 ft·lb$_f$)
Screw, brake hose clamp M6	7 Nm (5.2 ft·lb$_f$)
Screw, combination instrument M6	7 Nm (5.2 ft·lb$_f$)
Screw, front sprocket cover M6	11 Nm (8.1 ft·lb$_f$)
Screw, headlight M6	8 Nm (5.9 ft·lb$_f$)
Screw, protective plate M6	8 Nm (5.9 ft·lb$_f$)
Nut, radiator M6	6 Nm (4.4 ft·lb$_f$)
Nut, shift rod M6	6 Nm (4.4 ft·lb$_f$)
Screw, engine guard M6	9 Nm (6.6 ft·lb$_f$) **Loctite® 243**
Nut, foot brake lever adjustment M6	10 Nm (7.4 ft·lb$_f$)
Screw, engine guard retaining bracket M6	9 Nm (6.6 ft·lb$_f$) **Loctite® 243**
Screw, main wiring harness bracket on frame M6	7 Nm (5.2 ft·lb$_f$)
Screw, main wiring harness clamp on frame M6	5 Nm (3.7 ft·lb$_f$)
Screw, side fairing bracket on frame M6	6 Nm (4.4 ft·lb$_f$)
Screw, air filter bracket on frame M6	7 Nm (5.2 ft·lb$_f$)
Screw, frame cover on frame M6	6 Nm (4.4 ft·lb$_f$)
Screw, intake snorkel on frame M6	7 Nm (5.2 ft·lb$_f$)
Screw, radiator tank on front frame M6	8 Nm (5.9 ft·lb$_f$)
Screw, radiator tank on rear frame M6	6 Nm (4.4 ft·lb$_f$)
Screw, tank on frame rear M6	11 Nm (8.1 ft·lb$_f$)
Screw, ABS modulator bracket on silent block M6	7 Nm (5.2 ft·lb$_f$)
Screw, reflector M6	6 Nm (4.4 ft·lb$_f$)

Screw, temperature and manifold air pressure sensor M6	5 Nm (3.7 ft·lb$_f$)
Nut, reflector M6	6 Nm (4.4 ft·lb$_f$)
Screw, air filter on air filter housing M6	7 Nm (5.2 ft·lb$_f$)
Screw, voltage regulator M6	7 Nm (5.2 ft·lb$_f$)
Screw, seat lock M6	7 Nm (5.2 ft·lb$_f$)
Screw, tail section on license plate holder support M6	7 Nm (5.2 ft·lb$_f$)
Screw, mask support left to right M6	6 Nm (4.4 ft·lb$_f$)
Screw, mask support on headlight M6	6 Nm (4.4 ft·lb$_f$)
Screw, inner cover on mask support M6	6 Nm (4.4 ft·lb$_f$)
Screw, windshield on mask support M6	6 Nm (4.4 ft·lb$_f$)
Screw, radiator shroud on radiator and fuel tank spoiler M6	6 Nm (4.4 ft·lb$_f$)
Screw, rear fender M6	6 Nm (4.4 ft·lb$_f$)
Screw, brake line guide M6	7 Nm (5.2 ft·lb$_f$)
Screw, brake line bracket on swingarm M6	7 Nm (5.2 ft·lb$_f$)
Screw, handguard M6×25	10 Nm (7.4 ft·lb$_f$) **Loctite® 243**
Screw, hand guard clamp M6×20	10 Nm (7.4 ft·lb$_f$)
Screw, rear seat fixing M8	18 Nm (13.3 ft·lb$_f$)
Screw, engine brace M8	22 Nm (16.2 ft·lb$_f$)
Screw, foot brake lever M8	16 Nm (11.8 ft·lb$_f$) **Loctite® 243**
Screw, bottom triple clamp M8	12 Nm (8.9 ft·lb$_f$)
Screw, top triple clamp M8	17 Nm (12.5 ft·lb$_f$)
Screw, fork shoe M8	15 Nm (11.1 ft·lb$_f$)
Screw, front brake disc M8	30 Nm (22.1 ft·lb$_f$)

Screw, rear brake disc M8	30 Nm (22.1 ft·lb$_f$)
Handlebar clamp screw M8	20 Nm (14.8 ft·lb$_f$)
Screw, front brake caliper M8	30 Nm (22.1 ft·lb$_f$) **Loctite® 243**
Nut, rear sprocket M8	34 Nm (25.1 ft·lb$_f$)
Screw, footpeg bracket top M8×20	25 Nm (18.4 ft·lb$_f$) **Loctite® 243**
Screw, horn M8	16 Nm (11.8 ft·lb$_f$)
Passenger footrest support screw M8	25 Nm (18.4 ft·lb$_f$)
Screw, grab handle M8	25 Nm (18.4 ft·lb$_f$)
Screw, lower rear panel M8	10 Nm (7.4 ft·lb$_f$)
Remaining screws on chassis M8	25 Nm (18.4 ft·lb$_f$)
Remaining nuts on chassis M8	30 Nm (22.1 ft·lb$_f$)
Screw, lower rear panel M8	10 Nm (7.4 ft·lb$_f$)
Screw, main silencer M8	21 Nm (15.5 ft·lb$_f$)
Screw, front seat fixing M8	25 Nm (18.4 ft·lb$_f$)
Screw, shift lever M8	16 Nm (11.8 ft·lb$_f$) **Loctite® 243**
Screw, mask support M8	21 Nm (15.5 ft·lb$_f$)
Screw, chain guide on link fork M8	10 Nm (7.4 ft·lb$_f$) **Loctite® 2701**
Stud, rear sprocket M10×1.25	50 Nm (36.9 ft·lb$_f$)
Screw, handlebar mount M10	45 Nm (33.2 ft·lb$_f$)
Fitting, side stand M10	32 Nm (23.6 ft·lb$_f$) **Loctite® 243**
Nut, side stand bracket M10×1.25	36 Nm (26.6 ft·lb$_f$)

Top shock absorber screw M10	50 Nm (36.9 ft·lb$_f$) **Loctite® 2701**
Nut, left rear mirror M10	23 Nm (17.0 ft·lb$_f$)
Remaining screws on chassis M10	46 Nm (33.9 ft·lb$_f$)
Remaining nuts on chassis M10	50 Nm (36.9 ft·lb$_f$)
Fitting, bottom shock absorber M10	50 Nm (36.9 ft·lb$_f$) **Loctite® 2701**
Banjo bolt, brake line M10	24 Nm (17.7 ft·lb$_f$)
Nut, right rear mirror M10LH	23 Nm (17.0 ft·lb$_f$)
Screw, engine brace M10	44 Nm (32.5 ft·lb$_f$) **Loctite® 243**
Screw, front footrest bracket M10×1.25	45 Nm (33.2 ft·lb$_f$) **Loctite® 243**
Screw, subframe, top M10	45 Nm (33.2 ft·lb$_f$) **Loctite® 2701**
Screw, combination instrument bracket M10×1.25	21 Nm (15.5 ft·lb$_f$)
Fitting, engine mounting bracket M10	49 Nm (36.1 ft·lb$_f$)
Threaded bolt, side stand bracket M10×1.25	27 Nm (19.9 ft·lb$_f$) **Loctite® 243**
Screw, subframe, bottom M10	45 Nm (33.2 ft·lb$_f$) **Loctite® 2701**
Nut, engine bearer M10	45 Nm (33.2 ft·lb$_f$)
Threaded bolt, footpeg bracket M10×1.25	40 Nm (29.5 ft·lb$_f$)
Thread adapter, mirror M10	27 Nm (19.9 ft·lb$_f$)
Nut, swingarm pivot M14×1.5	100 Nm (73.8 ft·lb$_f$)
Nut, wheel spindle, rear M16	100 Nm (73.8 ft·lb$_f$)
Screw, top steering head M16×1.5	53 Nm (39.1 ft·lb$_f$)

Oxygen sensor M18×1.5		19 Nm (14.0 ft·lb_f)
Adjusting ring, fork bearing M22		10 Nm (7.4 ft·lb_f)
Screw, steering head M22×1.5		50 Nm (36.9 ft·lb_f)
Screw, wheel spindle, front M24		45 Nm (33.2 ft·lb_f)
Nut, steering head M30	1.	45 Nm (33.2 ft·lb_f)
	2.	2 turns (720°)
	3.	15 Nm (11.1 ft·lb_f)
Screw, chain guard **EJOT PT®** – MK60×30		3 Nm (2.2 ft·lb_f)

24.1 Declarations of conformity

Note
The functional and equipment scope is model-dependent and may not include all wireless systems and application areas referred to.

JNS Instruments Ltd. hereby declares that the **320T1100** wireless system conforms with the relevant guidelines.
The full text of the Declaration of Conformity is available at the following Internet address.
Certification website: https://www.ktm.com/320T1100

25.1 Recycling

I02045-10

Further information is available at the following website.
Recycling information website: https://www.quefairedemesdechets.fr

A Technical terms

ABS	Anti-lock braking system	Safety system that prevents locking of the wheels when driving straight ahead without the influence of lateral forces
ATIR	Automatic Turn Indicator Reset	Software, which automatically switches the indicator off according to a time or travel distance counter
	KTMconnect	System for remote communication with suitable cell phones and communication systems for telephony and audio
MTC	Motorcycle Traction Control	Auxiliary function of the motor control that reduces engine torque with spinning rear wheel
OBD	On-board diagnosis	Vehicle system, which monitors the specified parameters of the vehicle electronics
	QUICKSHIFTER+	Engine electronics function for shifting up and down without clutch actuation

B Fuels

Super unleaded

Standards	
• ROZ 95	→ DIN EN 228

Fuel additive

Recommended supplier
MOTOREX®
• **FUEL STABILIZER**

C Operating supplies

Street chain spray

Recommended supplier

MOTOREX®

- **CHAINLUBE ROAD STRONG**

Fork oil

Recommended supplier

MOTOREX®

- **RACING FORK OIL**

Standards

• SAE 5	→ SAE

Thread oiled

Universal oil spray

Recommended supplier

MOTOREX®

- **JOKER 440 SYNTHETIC**

Long-life grease

Recommended supplier

MOTOREX®

- **Bike Grease 2000**

engine oil

Recommended supplier

MOTOREX®

- **V-SYNT 4T**

Standards

→ JASO T903 MA2

• SAE 15W/50	→ SAE

Properties

- fully synthetic

Shock absorber oil

Order details	
• 50180751S1	
Standards	
• SAE 2.5	→ SAE

Brake fluid DOT 5.1

Recommended supplier
MOTOREX® • **BRAKE FLUID DOT 5.1**
Standards
→ DOT

Coolant

Recommended supplier	
MOTOREX® • **COOLANT M3.0**	
Properties	
• Antifreeze protection to at least	−25 °C (−13.0 °F)

D Cleaning agents

Shine spray with beading effect

Recommended supplier

MOTOREX®

- **MOTO SHINE MS1**

Chain cleaner

Recommended supplier

MOTOREX®

- **CHAIN CLEAN**

Preserving materials

Recommended supplier

MOTOREX®

- **MOTO PROTECT**

Cleaning agents for plastics, glass, lacquers, metals, windshields and visors

Recommended supplier

MOTOREX®

- **QUICK CLEANER**

Environmentally neutral universal cleaning agent

Recommended supplier

MOTOREX®

- **MOTO CLEAN UNIVERSAL**

1

12 V battery
charging 119
installation 119

12 V battery
removing 118

A

ABS 102

ABS fuses
changing 122

Accessories 16
Anti-lock braking system 102
Auxiliary substances 16

B

Brake discs
checking 103

Brake fluid
adding front brake 104
adding to rear brake 107

Brake fluid level
checking on front brake 104
checking on rear brake 106

Brake lining retainers
checking on front brake 105
checking on rear brake 108

Brake pad
checking on front brake 105

Brake pads
checking on rear brake 108

Brake pedal
checking the free travel 106

Brakes 75
Braking 75

Breakdown
towing 77

C

Chain
checking 91
cleaning 89
dirt, checking for 88

Chain tension
adjusting 90
checking 89

Changing gear 72
Clothing 12

Clutch lever
adjusting the basic position 64

Combination instrument
activation and testing 32
audio 50
Bike info 45
Bluetooth 55
Clock format 59
connectivity 54
coolant temperature indicator 39
CRUISE CONTROL 47
Cruise control indicator 38
Custom Switch 54
Date format 59
Distance 60
Extra Functions 62
favorites 49, 53
Favorites–display 1–4 53
Fuel Cons 61
headset pairing 56
Heating (optional) 51
indicator lamps 34
Language 61
last search 48
Motorcycle 42
navigation 47
Navigation display (optional) 41
pairing a phone 55
Points of Interest 49
Quick selector 1 53
Quick selector 2 54
Settings 52
shift light 37
skip Waypoint 49
state 48
stop Navigation 50
Temperature 60
Type of audio device 57
Units 60
volume 47

Conditions of use
use in difficult conditions 16

Coolant
changing 133
draining 131

Coolant level
checking 128, 130

Cooling system
filling/bleeding 131

Cornering MTC 135
Customer service 16

D

Dashboard
- **ABS** . . . 43
- **Bike info** . . . 46
- **Call** display . . . 41
- Cruise control **State** . . . 47
- **Display Mode** . . . 45
- **Favorites** display . . . 40
- fuel level display . . . 39
- heated grip (optional) . . . 40
- **Heated Grips** (optional) . . . 51
- **MTC** . . . 44
- overview . . . 32
- **Quick Selector 1** display . . . 40
- **Quick Selector 2** display . . . 40
- **QUICKSHIFTER+** (optional) . . . 44
- **Remote Control Mode** (optional) . . . 41
- **Ride Mode** . . . 43, 135
- **Ride–Mode** display . . . 38
- **Seat Heating Rider** (optional) . . . 51
- speed . . . 36
- speed display . . . 37
- time . . . 38
- **Trip 1** . . . 45
- **Trip 2** . . . 46
- **Warning** . . . 46
- warnings . . . 33

Date
- adjusting . . . 58

Difficult operating conditions . . . 16, 69

Driving
- starting off . . . 71

E

Engine
- running in . . . 68

Engine guard retaining bracket
- installation . . . 99
- removing . . . 98

engine oil
- adding . . . 139
- changing . . . 137

Engine oil level
- checking . . . 137

Engine sprocket
- checking . . . 91

Environment . . . 13

F

Figures . . . 16

Foot brake lever stub
- adjusting . . . 65

Fork
- compression damping, adjusting . . . 82
- rebound, adjusting . . . 82

Fork legs
- cleaning the dust boots . . . 87

Fork protector
- installation . . . 100
- removing . . . 100

Front fender
- installation . . . 99
- removing . . . 99

Front wheel
- installing . . . 111
- removing . . . 110

Frost protection
- checking . . . 128

Fuel tank cap
- closing . . . 28
- opening . . . 27

Fuel tank fairing right
- installation . . . 96
- removing . . . 93

Fuse
- of the individual electrical power consumers, changing . . . 124

G

Gear shift lever
- adjusting . . . 65

H

Handbrake lever
- adjusting the basic position . . . 64

Handlebar position
- adjusting . . . 63

Headlight
- adjusting headlight range . . . 126

Headlight setting
- checking . . . 126

I

Implied warranty . . . 16

Improper use . . . 13

indicator lamps . . . 34

K

Key number . . . 19

L

Loading the vehicle 68
Luggage 68

M

Main fuse
changing 121
Manufacturer's warranty 16
Motorcycle
cleaning 141
lifting gear at rear, raising with 85
raising the front with lifting gear 85
removing the front from the lifting gear 86
removing the rear from the lifting gear 85
Motorcycle traction control (optional) 135

O

Oil filter
changing 137
Oil screens
cleaning 137
Owner's manual 13

P

Parking 76
Passenger strap 29
Play in the clutch lever
adjusting 136
checking 136
Preparing for use
after storage 145
checks and maintenance measures when preparing for use 70
notes on preparing for first use 67
Protective clothing 12

R

Rear hub damping rubbers
checking 114
Rear sprocket
checking 91
Rear wheel
installation 113
removing 112
Recycling 164
Refueling
fuel 78
Resources 16
Riding 72

S

Safe use 12
Seat
mounting 88
removing 88
Serial number
lock system 19
Service 16
Shock absorber
adjusting the rebound damping 83
adjusting the spring preload 83
Side fairing right
installation 97
removing 93
Side stand 30
Skid plate
installation 98
removing 98
spare parts 16
Spoke tension
checking 117
Starting 70
Steering
locking 26
unlocking 27
Stopping 76
Storage 144

T

Tampering 11
Time
adjusting 58
Tire condition
checking 115
Tire pressure
checking 116
towing 77
Transport 77

U

USB
USB–C socket 27
USB–C socket 27

V

Vehicle identification number 19
VIN 19

W

Windshield
installation 100
removing 100

Winter operation
checks and maintenance steps 142

Work rules 12

3240325en

25/09/2026

KTM Sportmotorcycle GmbH
5230 Mattighofen/Austria
https://www.ktm.com