OWNER'S MANUAL **2023**



FE 250

Art. no. 3402636en

Husqvarna®
MOTORCYCLES

DEAR HUSQVARNA MOTORCYCLES CUSTOMER

Congratulations on your decision to purchase a Husqvarna motorcycle. You are now the owner of a state-of-the-art sports vehicle which, with appropriate care, will bring you pleasure for a long time to come.

We wish you good and safe riding at all times!

Please enter the serial number of your vehicle below.

Vehicle identification number (📖 p. 14)	Stamp of dealer
Engine number (📖 p. 14)	
Key number (EU) (📖 p. 14)	

The Owner's Manual contained the latest information for this model series at the time of publication. However, minor differences due to further developments in design cannot be ruled out completely.

All specifications contained herein are non-binding. Husqvarna Motorcycles GmbH specifically reserves the right to modify or delete technical specifications, prices, colors, forms, materials, services, designs, equipment, etc., without prior notice and without specifying reasons, to adapt these to local conditions, as well as to stop production of a particular model without prior notice. Husqvarna Motorcycles accepts no liability for delivery options, deviations from illustrations and descriptions, as well as misprints and other errors. The models portrayed partly contain special equipment that does not belong to the regular scope of supply.

© 2022 Husqvarna Motorcycles GmbH, Mattighofen Austria

All rights reserved

Reproduction, even in part, as well as copying of all kinds, is permitted only with the express written permission of the copyright owner.

ISO 9001(12 100 6061)
Husqvarna Motorcycles applies quality assurance processes that lead to the highest possible product quality as defined in the ISO 9001 international quality management standard.
Issued by: TÜV Management Service

REG.NO. 12 100 6061

Husqvarna Motorcycles GmbH
Stallhofnerstraße 3
5230 Mattighofen, Austria

This document is valid for the following models:

FE 250 EU (F2103W4)

FE 250 CN (F2187W4)

3402636en

28.04.2022

TABLE OF CONTENTS

1 MEANS OF REPRESENTATION 6

1.1 Symbols used 6
1.2 Formats used 6

2 SAFETY ADVICE 7

2.1 Use definition – intended use 7
2.2 Misuse 7
2.3 Safety advice 7
2.4 Degrees of risk and symbols 8
2.5 Tampering warning 8
2.6 Safe operation 8
2.7 Protective clothing 9
2.8 Work rules 9
2.9 Environment 10
2.10 Owner's Manual 10

3 IMPORTANT NOTES 11

3.1 Manufacturer warranty, implied warranty 11
3.2 Fuel, auxiliary substances 11
3.3 Spare parts, accessories 11
3.4 Service 11
3.5 Figures 11
3.6 Customer service 11

4 VIEW OF VEHICLE 12

4.1 View of vehicle, front left (example) 12
4.2 View of vehicle, rear right (example) 13

5 SERIAL NUMBERS 14

5.1 Vehicle identification number 14
5.2 Type label (EU) 14
5.3 Key number (EU) 14
5.4 Engine number 14
5.5 Fork part number 15
5.6 Shock absorber article number 15

6 CONTROLS 16

6.1 Clutch lever 16
6.2 Hand brake lever 16
6.3 Throttle grip 16
6.4 Stop button 16
6.5 Horn button (EU) 17
6.6 Light switch 17
6.7 Turn signal switch (EU) 18
6.8 Emergency OFF switch (EU) 18
6.9 Start button 18
6.10 Combination switch 19
6.11 Overview of indicator lamps (EU) 19
6.12 Overview of indicator lights (CN) 19
6.13 Opening fuel tank filler cap 20
6.14 Closing the fuel tank filler cap 20
6.15 Cold start button 21
6.16 Idle speed adjusting screw 21
6.17 Shift lever 22
6.18 Foot brake lever 22
6.19 Side stand 22
6.20 Steering lock (EU) 23
6.21 Locking the steering (EU) 23
6.22 Unlocking the steering (EU) 24

7 COMBINATION INSTRUMENT 25

7.1 Combination instrument overview 25
7.2 Activation 25
7.3 Message on the combination instrument 25
7.4 Setting the combination instrument 25
7.5 Adjusting the kilometers or miles 26
7.6 Setting the clock 27
7.7 Setting the service display 27
7.8 Speed, time, and DST distance 1 28
7.9 Speed, time, and DST2 distance 2 28
7.10 AVG average speed, ART operating hours, and ODO total distance covered 29

8 PREPARING FOR USE 30

8.1 Advice on preparing for first use 30
8.2 Running-in the engine 31
8.3 Starting power of lithium-ion batteries at low temperatures 32
8.4 Preparing the vehicle for difficult operating conditions 32
8.5 Preparing the vehicle for riding on dry sand 32
8.6 Preparing the vehicle for riding on wet sand 33
8.7 Preparing the vehicle for riding on wet and muddy circuits 33
8.8 Preparing vehicle for high temperatures or slow riding 34
8.9 Preparing the vehicle for low temperatures or snow 34

9 RIDING INSTRUCTIONS 35

9.1 Checks and maintenance measures when preparing for use 35
9.2 Starting the vehicle 35
9.3 Activating traction control 36
9.4 Starting off 37
9.5 Shifting, riding 37
9.6 Braking 37
9.7 Stopping, parking 38
9.8 Transporting 39
9.9 Refueling 39

10 SERVICE SCHEDULE 41
10.1 Additional information 41
10.2 Required work 41
10.3 Recommended work 42
11 TUNING THE CHASSIS 44
11.1 Checking the basic chassis setting with rider's weight 44
11.2 Compression damping of the shock absorber 44
11.3 Adjusting the low-speed compression damping of the shock absorber 44
11.4 Adjusting the high-speed compression damping of the shock absorber 45
11.5 Adjusting the rebound damping of the shock absorber 46
11.6 Measuring the dimension of the rear wheel unloaded 46
11.7 Checking the static sag of the shock absorber 47
11.8 Checking the riding sag of the shock absorber 47
11.9 Adjusting the spring preload of the shock absorber 48
11.10 Adjusting the riding sag 49
11.11 Checking the basic setting of the fork 49
11.12 Adjusting the compression damping of the fork 50
11.13 Adjusting the rebound damping of the fork 50
11.14 Adjusting the spring preload of the fork 51
11.15 Handlebar position 51
11.16 Adjusting the handlebar position 52
12 SERVICE WORK ON THE CHASSIS 53
12.1 Raising the motorcycle with a lift stand 53
12.2 Removing the motorcycle from the lift stand 53
12.3 Bleeding the fork legs 53
12.4 Cleaning the dust boots of the fork legs 54
12.5 Removing the fork protector 54
12.6 Installing the fork protector 55
12.7 Removing the fork legs 55
12.8 Installing the fork legs 56
12.9 Removing the lower triple clamp 56
12.10 Installing the lower triple clamp 57
12.11 Checking the steering head bearing play 59
12.12 Adjusting the steering head bearing play 60
12.13 Lubricating the steering head bearing 61
12.14 Removing front fender 61
12.15 Installing front fender 62
12.16 Removing the shock absorber 62
12.17 Installing the shock absorber 64
12.18 Removing the seat 65
12.19 Mounting the seat 66
12.20 Removing the air filter box cover 67
12.21 Installing the air filter box cover 67
12.22 Removing the air filter 67
12.23 Installing the air filter 68
12.24 Cleaning the air filter and air filter box 68
12.25 Removing the right side cover 69
12.26 Installing the right side cover 70
12.27 Removing the main silencer 70
12.28 Installing the main silencer 71
12.29 Changing the glass fiber yarn filling in the main silencer 71
12.30 Removing the fuel tank 72
12.31 Installing the fuel tank 74
12.32 Checking for chain dirt accumulation 75
12.33 Cleaning the chain 76
12.34 Checking the chain tension 76
12.35 Adjusting the chain tension 77
12.36 Checking the chain, rear sprocket, engine sprocket, and chain guide 78
12.37 Checking the frame 81
12.38 Checking the link fork 81
12.39 Checking the throttle cable routing 81
12.40 Checking the rubber grip 82
12.41 Adjusting the basic position of the clutch lever 83
12.42 Checking/correcting the fluid level of hydraulic clutch 83
12.43 Changing the hydraulic clutch fluid 84
12.44 Removing the engine guard 85
12.45 Installing the engine guard 86
13 BRAKE SYSTEM 87
13.1 Adjusting the basic position of the hand brake lever 87
13.2 Checking the brake discs 87
13.3 Checking the front brake fluid level 88
13.4 Adding front brake fluid 88
13.5 Checking the front brake linings 89
13.6 Changing the brake linings of the front brake 90

TABLE OF CONTENTS

13.7 Checking the free travel of foot brake lever 92
13.8 Adjusting the basic position of the foot brake lever 🔧 93
13.9 Checking the rear brake fluid level 93
13.10 Adding rear brake fluid 🔧 94
13.11 Checking the rear brake linings 95
13.12 Changing the rear brake linings 🔧 95

14 WHEELS, TIRES 98

14.1 Removing the front wheel 🔧 98
14.2 Installing the front wheel 🔧 99
14.3 Removing the rear wheel 🔧 99
14.4 Installing the rear wheel 🔧 100
14.5 Checking the tire condition 102
14.6 Checking tire pressure 102
14.7 Checking spoke tension 103

15 ELECTRICAL SYSTEM 104

15.1 Removing the 12-V battery 🔧 104
15.2 Installing the 12-V battery 🔧 105
15.3 Charging the 12-V battery 🔧 107
15.4 Changing main fuse 108
15.5 Changing the fuses of individual electrical power consumers 109
15.6 Removing the headlight mask with the headlight 111
15.7 Installing the headlight mask with the headlight 111
15.8 Changing the headlight bulb 113
15.9 Changing the turn signal bulb (EU) 113
15.10 Checking the headlight setting 114
15.11 Adjust the headlight range. 115
15.12 Changing the combination instrument battery 115
15.13 Diagnostics connector 116

16 COOLING SYSTEM 117

16.1 Cooling system 117
16.2 Checking the antifreeze and coolant level 117
16.3 Checking the coolant level 118
16.4 Draining the coolant 🔧 118
16.5 Refilling with coolant 🔧 119
16.6 Changing the coolant 🔧 120

17 TUNING THE ENGINE 121

17.1 Checking the play in the throttle cable 121
17.2 Adjusting the play in the throttle cable 🔧 121
17.3 Adjusting the characteristic map of the throttle response 🔧 122
17.4 Changing the mapping 124
17.5 Adjusting the idle speed 🔧 124
17.6 Programming the throttle valve position 125
17.7 Checking the basic position of the shift lever 126
17.8 Adjusting the basic position of the shift lever 🔧 126

18 SERVICE WORK ON THE ENGINE 127

18.1 Changing the fuel screen 🔧 127
18.2 Checking the engine oil level 128
18.3 Changing the engine oil and oil filter, cleaning the oil screen 🔧 128
18.4 Adding engine oil 131

19 CLEANING, CARE 132

19.1 Cleaning the motorcycle 132
19.2 Checks and maintenance steps for winter operation 133

20 STORAGE 134

20.1 Storage 134
20.2 Preparing for use after storage 135

21 TROUBLESHOOTING 136

22 BLINK CODE 139

23 TECHNICAL DATA 141

23.1 Engine 141
23.2 Engine tightening torques 142
23.3 Capacities 144
23.3.1 Engine oil 144
23.3.2 Coolant 144
23.3.3 Fuel 144
23.4 Chassis 144
23.5 Electrical system 145
23.6 Tires 145
23.7 Fork 146
23.8 Shock absorber 146
23.9 Chassis tightening torques 147

24 SUBSTANCES 150

25 AUXILIARY SUBSTANCES 152

26 STANDARDS 154

27 INDEX OF SPECIAL TERMS 155

28 LIST OF ABBREVIATIONS 156

29 LIST OF SYMBOLS 157

29.1 Yellow and orange symbols 157
29.2 Green and blue symbols 157

INDEX 158

1 MEANS OF REPRESENTATION

1.1 Symbols used

The meaning of specific symbols is described below.

✓	Indicates an expected reaction (e.g. of a work step or a function).
✗	Indicates an unexpected reaction (e.g. of a work step or a function).
	Indicates work that requires expert knowledge and technical understanding. In the interests of your own safety, have these jobs performed by an authorized Husqvarna Motorcycles workshop. Your motorcycle will be cared for there to the highest degree by specially trained experts using the special tools required.
	Indicates a page reference (more information is provided on the specified page).
	Indicates information with more details or tips.
»	Indicates the result of a testing step.
V	Indicates a voltage measurement.
A	Indicates a current measurement.
	Indicates the end of an activity, including potential rework.

1.2 Formats used

The typographical formats used in this document are explained below.

Proprietary name	Indicates a proprietary name.
Name®	Indicates a protected name.
Brand™	Indicates a brand available on the open market.
Underlined terms	Refer to technical details of the vehicle or indicate technical terms, which are explained in the glossary.

2.1 Use definition – intended use

(EU)

This vehicle has been designed and built to withstand the normal stresses and strains of racing. This vehicle complies with the currently valid regulations and categories of the top international motorsports organizations.

Info

This vehicle is only authorized for operation on public roads in the homologated (restricted) version.

The derestricted version of this vehicle must only be operated in closed off areas away from public highway traffic.

This vehicle is designed for use in offroad endurance competition, and not primarily for use in motocross.

(CN)

This vehicle has been designed and built to withstand the normal stresses and strains of racing. This vehicle complies with the currently valid regulations and categories of the top international motorsports organizations.

Info

Only operate this vehicle in closed-off areas remote from public road traffic.

This vehicle is designed for use in offroad endurance competition, and not primarily for use in motocross.

2.2 Misuse

The vehicle must only be used as intended.

Dangers can arise for people, property and the environment through use not as intended.

Any use of the vehicle beyond the intended and defined use constitutes misuse.

Misuse also includes the use of operating and auxiliary fluids which do not meet the required specification for the respective use.

2.3 Safety advice

A number of safety instructions need to be followed to operate the product described safely. Therefore read this instruction and all further instructions included carefully. The safety instructions are highlighted in the text and are referred to at the relevant passages.

Info

Various information and warning labels are attached in prominent locations on the product described. Do not remove any information or warning labels. If they are missing, you or others may not recognize dangers and may therefore be injured.

2.4 Degrees of risk and symbols

Danger
Identifies a danger that will immediately and invariably lead to fatal or serious permanent injury if the appropriate measures are not taken.

Warning
Identifies a danger that is likely to lead to fatal or serious injury if the appropriate measures are not taken.

Caution
Identifies a danger that may lead to minor injuries if the appropriate measures are not taken.

Note
Identifies a danger that will lead to considerable machine and material damage if the appropriate measures are not taken.

Note
Indicates a danger that will lead to environmental damage if the appropriate measures are not taken.

2.5 Tampering warning

Tampering with the noise control system is prohibited. Federal law prohibits the following acts or the causing thereof:

1 The removal or rendering inoperative by any person other than for purposes of servicing, repair, or replacement, of any device or element of design incorporated into any new vehicle for the purpose of noise control prior to its sale or delivery to the ultimate purchaser or while it is in use, or

2 the use of the vehicle after such device or element of design has been removed or rendered inoperative by any person.

Among those acts presumed to constitute tampering are the acts listed below:

1 Removal or puncturing of the main silencers, baffles, manifolds or any other components which conduct emissions.

2 Removal or puncturing of parts of the intake system.

3 Lack of proper maintenance.

4 Replacing moving parts of the vehicle, or parts of the exhaust system or intake system, with parts other than those specified by the manufacturer.

2.6 Safe operation

Danger
Danger of accidents A rider who is not fit to ride poses a danger to him or herself and others.
– Do not operate the vehicle if you are not fit to ride due to alcohol, drugs or medication.
– Do not operate the vehicle if you are physically or mentally impaired.

Danger
Danger of poisoning Exhaust gases are toxic and inhaling them may result in unconsciousness and death.
– Always make sure there is sufficient ventilation when running the engine.
– Use effective exhaust extraction when starting or running the engine in an enclosed space.

Warning

Danger of burns Some vehicle components become very hot when the vehicle is operated.

– Do not touch any parts such as the exhaust system, radiator, engine, shock absorber, or brake system before the vehicle parts have cooled down.
– Let the vehicle parts cool down before you perform any work on the vehicle.

Only operate the vehicle when it is in perfect technical condition, in accordance with its intended use, and in a safe and environmentally compatible manner.
The vehicle should only be used by trained persons. An appropriate driver's license is needed to drive the vehicle on public roads.
Have malfunctions that impair safety immediately eliminated by an authorized Husqvarna Motorcycles workshop.
Adhere to the information and warning labels on the vehicle.

2.7 Protective clothing

Warning

Risk of injury Missing or poor protective clothing presents an increased safety risk.

– Wear appropriate protective clothing such as helmet, boots, gloves as well as trousers and a jacket with protectors on all rides.
– Always wear protective clothing that is in good condition and meets the legal regulations.

In the interest of your own safety, Husqvarna Motorcycles recommends that you only operate the vehicle while wearing protective clothing.

2.8 Work rules

Unless specified otherwise, the ignition must be turned off during all work (models with ignition lock, models with remote key) or the engine must be at a standstill (models without ignition lock or remote key).
Special tools are necessary for certain tasks. The tools are not a component of the vehicle, but can be ordered using the number in parentheses. Example: bearing puller (15112017000)
Unless otherwise noted, normal conditions apply to all tasks and descriptions.

Ambient temperature	20 °C (68 °F)
Ambient air pressure	1,013 mbar (14.69 psi)
Relative air humidity	60 ± 5 %

During assembly, use new parts to replace parts which cannot be reused (e.g. self-locking screws and nuts, expansion screws, seals, sealing rings, O-rings, pins, and lock washers).
In the case of certain screws, a screw adhesive (e.g. **Loctite®**) is required. Observe the manufacturer's instructions.
If thread locker (e.g., **Precote®**) has already been applied to a new part, do not apply any additional thread locker.
After disassembly, clean the parts that are to be reused and check them for damage and wear. Change damaged or worn parts.
After completing a repair or service work, check the operating safety of the vehicle.

2.9 Environment

If you use your motorcycle responsibly, you can ensure that problems and conflicts do not occur. To protect the future of the motorcycle sport, make sure that you use your motorcycle legally, display environmental consciousness, and respect the rights of others.

When disposing of used oil, other operating and auxiliary fluids, and used components, comply with the laws and regulations of the respective country.

Because motorcycles are not subject to the EU regulations governing the disposal of used vehicles, there are no legal regulations that pertain to the disposal of an end-of-life motorcycle. Your authorized Husqvarna Motorcycles dealer will be glad to advise you.

2.10 Owner's Manual

It is important that you read this Owner's Manual carefully and completely before making your first trip. The Owner's Manual contains useful information and many tips on how to operate, handle, and service your motorcycle. This is the only way to find out how best to customize the vehicle for your own use and how you can protect yourself from injury.

Tip
Store the Owner's Manual on your terminal device, for example, so that you can read it whenever you need to.

If you would like to know more about the vehicle or have questions on the material you read, please contact an authorized Husqvarna Motorcycles dealer.

The Owner's Manual is an important component of the vehicle. If the vehicle is sold, the Owner's Manual must be downloaded again by the new owner.

The Owner's Manual can be downloaded several times using the QR code or the link on the delivery certificate.

The Owner's Manual is also available for download from your authorized Husqvarna Motorcycles dealer and on the Husqvarna Motorcycles website. A printed copy can also be ordered from your authorized Husqvarna Motorcycles dealer.

International Husqvarna Motorcycles website: www.husqvarna-motorcycles.com

3.1 Manufacturer warranty, implied warranty

The work prescribed in the service schedule must only be carried out in an authorized Husqvarna Motorcycles workshop and confirmed in the **Husqvarna Motorcycles Dealer.net**, as otherwise all warranty claims will be void. Damage or secondary damage caused by tampering with and/or conversions on the vehicle are not covered by the manufacturer warranty.

3.2 Fuel, auxiliary substances

Note

Environmental hazard Improper handling of fuel is a danger to the environment.

– Do not allow fuel to enter the groundwater, the soil, or the sewage system.

Use fuels and auxiliary substances in accordance with the Owner's Manual and specification.

3.3 Spare parts, accessories

For your own safety, only use spare parts and accessory products that are approved and/or recommended by Husqvarna Motorcycles, and have them installed by an authorized Husqvarna Motorcycles workshop. Husqvarna Motorcycles accepts no liability for other products and any resulting damage or loss.
The article numbers of some spare parts and accessory products are specified in parentheses in the descriptions. Your authorized Husqvarna Motorcycles dealer will be glad to advise you.

The current **Husqvarna Motorcycles** accessories for your vehicle are available from your authorized Husqvarna Motorcycles dealer and on the Husqvarna Motorcycles website.
International Husqvarna Motorcycles website: www.husqvarna-motorcycles.com

3.4 Service

A prerequisite for perfect operation and prevention of premature wear is that the service, care, and tuning work on the engine and chassis is properly carried out as described in the Owner's Manual. An incorrect suspension setting can lead to damage and breakage of chassis components.
Use of the vehicle under difficult conditions, such as on sand or on wet, dusty and muddy surfaces, can result in significantly increased wear of components, such as the drive train, brake system, air filter or suspension components. For this reason, it may be necessary to inspect or replace parts before the next scheduled service.
It is imperative that you adhere to the stipulated run-in times and service intervals. If you observe these exactly, you will ensure a much longer service life for your motorcycle.
The relevant mileage or time interval is whichever occurs first.

3.5 Figures

The figures contained in the manual may depict special equipment.
In the interest of clarity, some components may be shown disassembled or may not be shown at all. It is not always necessary to disassemble the component to perform the activity in question. Please follow the instructions in the text.

3.6 Customer service

Your authorized Husqvarna Motorcycles dealer will be happy to answer any questions you may have regarding your vehicle and Husqvarna Motorcycles.

A list of authorized Husqvarna Motorcycles dealers can be found on the Husqvarna Motorcycles website.
International Husqvarna Motorcycles website: www.husqvarna-motorcycles.com

4 VIEW OF VEHICLE

4.1 View of vehicle, front left (example)



1. Hand brake lever (p. 16)
2. Clutch lever (p. 16)
3. Fuel tank filler cap
4. Air filter box cover
5. Side stand (p. 22)
6. Engine number (p. 14)
7. Shift lever (p. 22)

4.2 View of vehicle, rear right (example)

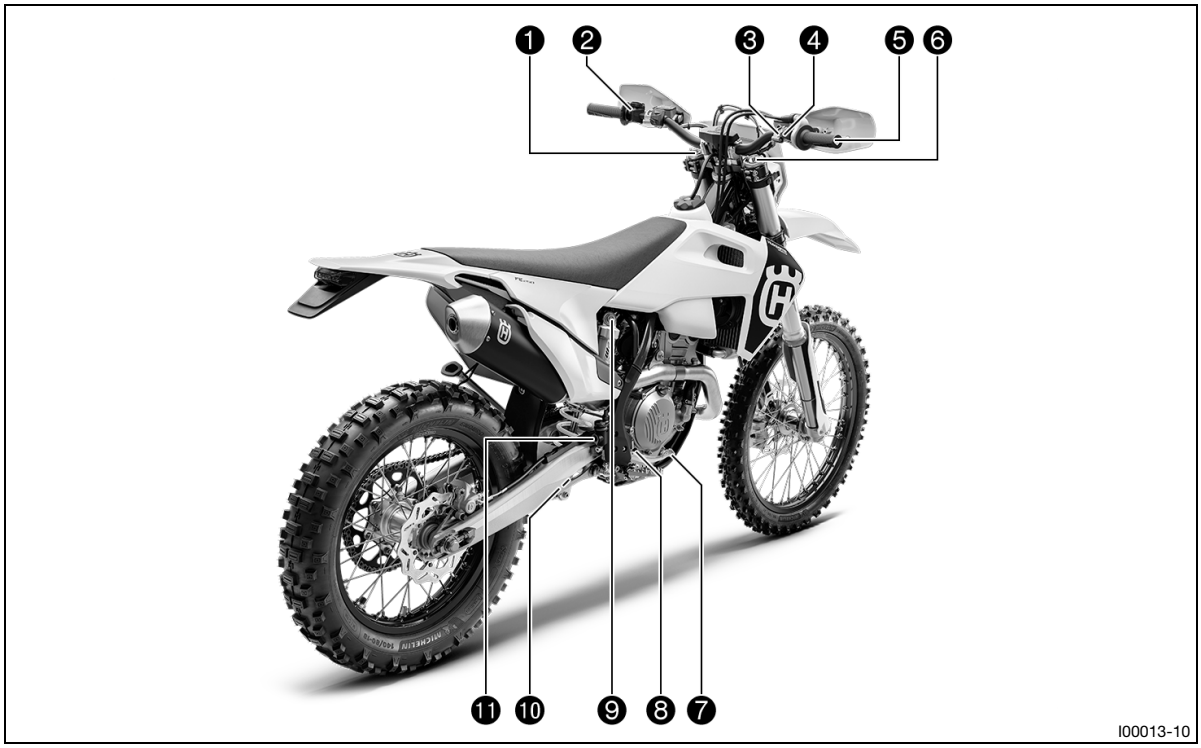

1. Fork compression adjuster
2. Stop button (p. 16)
2. Horn button (p. 17) **(EU)**
2. Light switch (p. 17)
2. Turn signal switch (p. 18) **(EU)**
3. Start button (p. 18)
4. Emergency OFF switch (p. 18) **(EU)**
5. Throttle grip (p. 16)
6. Fork rebound adjustment
7. Foot brake lever (p. 22)
8. Level viewer, engine oil
9. Shock absorber compression adjuster
10. Shock absorber rebound adjuster
11. Level viewer for brake fluid, rear

5 SERIAL NUMBERS

5.1 Vehicle identification number

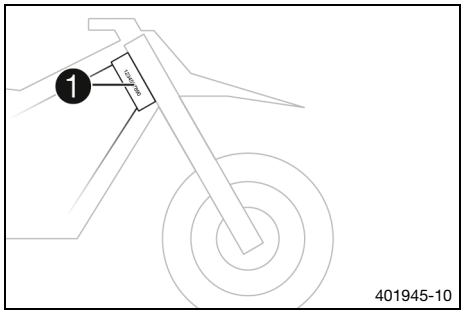

The vehicle identification number ❶ is stamped on the right side of the steering head.

5.2 Type label (EU)

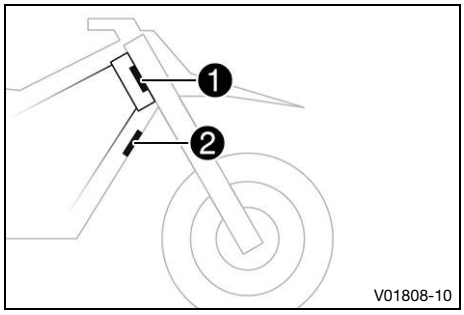

The Europe type label ❶ is fixed to the front of the steering head.

The Canada type label ❷ is fixed to the front of the chest tube.

5.3 Key number (EU)

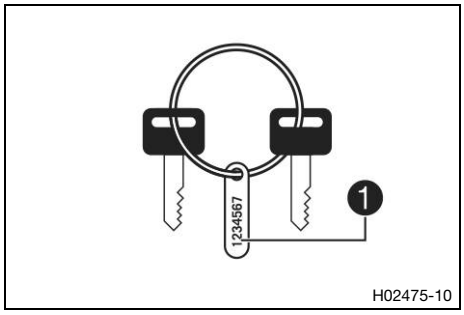

Key number ❶ for the steering lock is stamped on a tag on the key ring.

5.4 Engine number

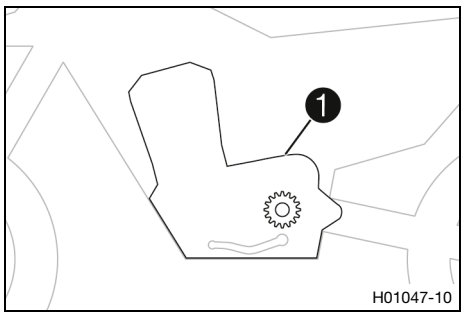

Engine number ❶ is embossed on the left side of the engine over the engine sprocket.

5.5 Fork part number

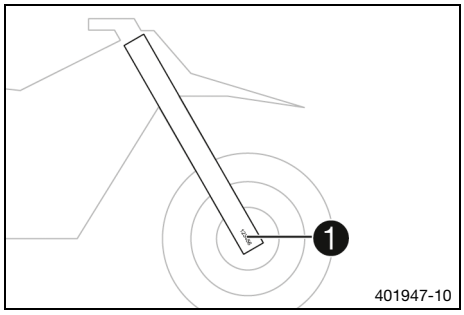

The fork part number ❶ is stamped on the inner side of the fork stub.

5.6 Shock absorber article number

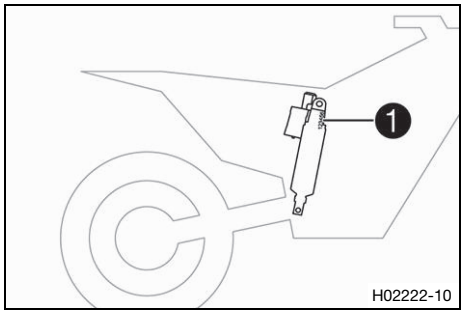

Shock absorber article number ❶ is stamped on the top of the shock absorber above the adjusting ring towards the engine side.

6.1 Clutch lever

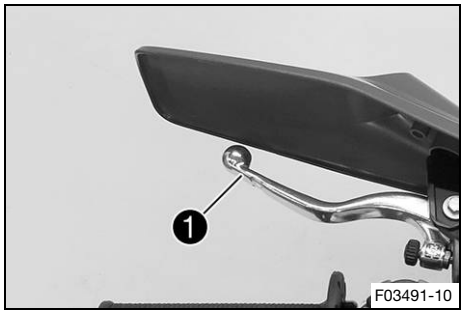

Clutch lever ❶ is fitted on the handlebar on the left.
The clutch is activated hydraulically and adjusts itself automatically.

6.2 Hand brake lever

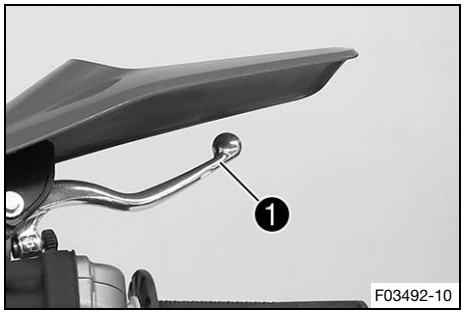

The hand brake lever ❶ is fitted on the right side of the handlebar.
The hand brake lever is used to activate the front brake.

6.3 Throttle grip

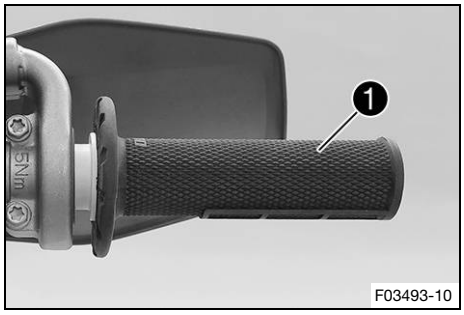

The throttle grip ❶ is fitted on the right side of the handlebar.

6.4 Stop button

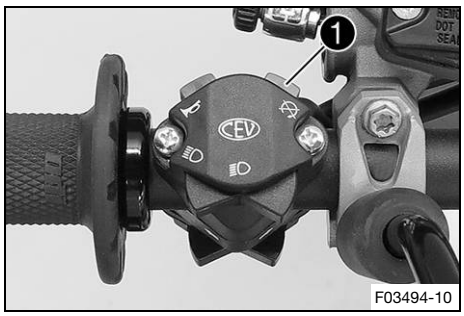

(EU)

The stop button ❶ is fitted on the left side of the handlebar.

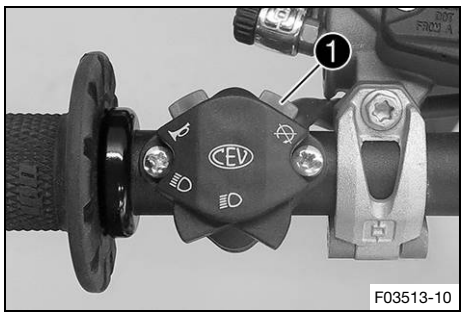

(CN)

The stop button ❶ is fitted on the left side of the handlebar.

Possible states

- The stop button ⊠ is in the basic position – In this position, the ignition circuit is closed and the engine can be started.
- Stop button ⊠ pressed – In this position, the ignition circuit is interrupted, a running engine stops, and a non-running engine will not start.

6.5 Horn button (EU)

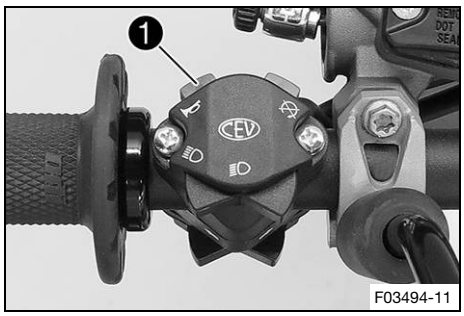

Horn button ❶ is fitted on the left side of the handlebar.

Possible states

- The horn button ⌓ is in the basic position
- The horn button ⌓ is pressed – The horn is operated in this position.

6.6 Light switch

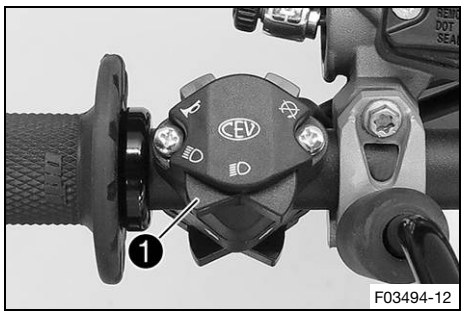

(EU)

Light switch ❶ is fitted on the left side of the handlebar.

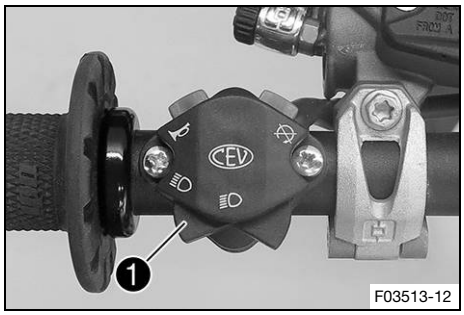

(CN)

Light switch ❶ is fitted on the left side of the handlebar.

Possible states

	Low beam on – Light switch is in the central position. In this position, the low beam and tail light are switched on.
	High beam on – Light switch is turned to the left. In this position, the high beam and the tail light are switched on.

6.7 Turn signal switch (EU)

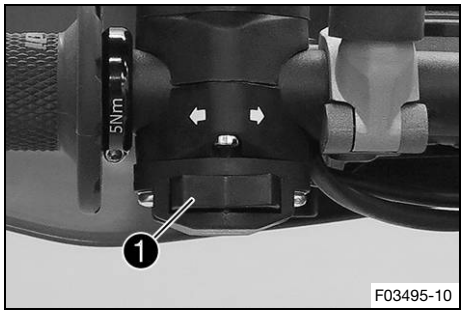

Turn signal switch ❶ is fitted on the left side of the handlebar.

Possible states

	Turn signal off – The turn signal switch is in the central position.
⬅	Left turn signal, on – The turn signal switch is turned to the left.
➡	Right turn signal, on – The turn signal switch is turned to the right.

6.8 Emergency OFF switch (EU)

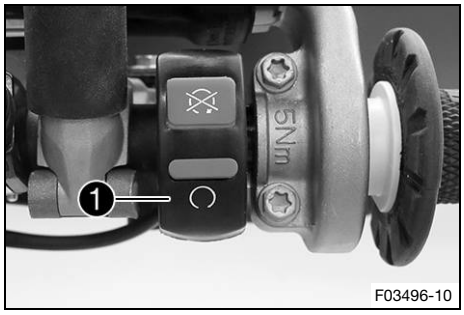

The emergency OFF switch ❶ is fitted on the right side of the handlebar.

Possible states

⊗	Ignition off – In this position, the ignition circuit is interrupted, a running engine stops, and a non-running engine will not start.
○	Ignition on – In this position, the ignition circuit is closed and the engine can be started.

6.9 Start button

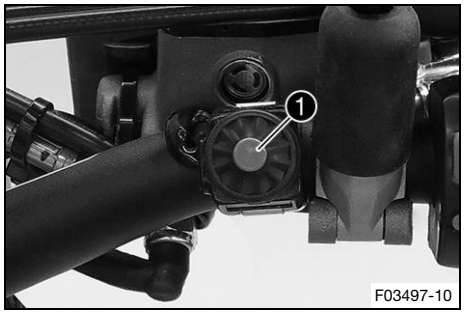

(EU)

Start button ❶ is fitted on the right side of the handlebar.

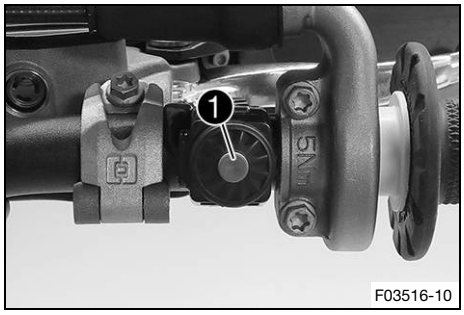

(CN)

Start button ❶ is fitted on the right side of the handlebar.

Possible states

- The start button ⓢ is in the basic position
- The start button ⓢ is pressed – The starter motor is actuated in this position.

6.10 Combination switch

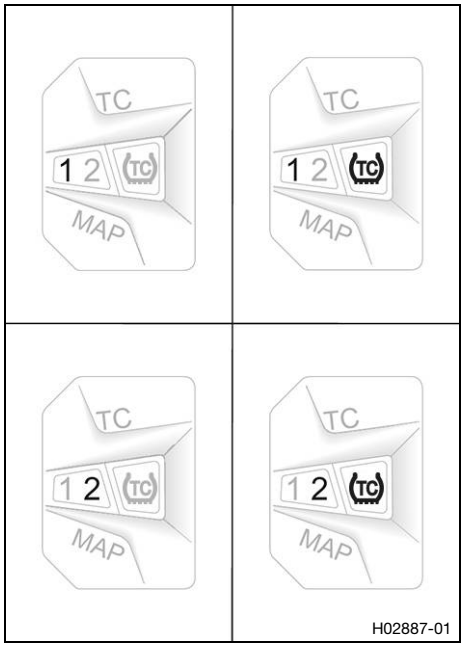

The combination switch is fitted on the left side of the handlebar.

Possible states

1	STANDARD – STANDARD mapping is activated when LED **1** lights up.
1TC	STANDARD with TC – STANDARD mapping with traction control is activated when LED **1** and **TC** light up.
2	ADVANCED – ADVANCED mapping is activated, when LED **2** lights up.
2TC	ADVANCED with TC – ADVANCED mapping with traction control is activated when LED **2** and **TC** light up.

Warning

Voiding of the government approval for road use and the insurance coverage If the combination switch is mounted, the vehicle's road permit, if any, expires.

– Only operate the vehicle in closed-off areas remote from public road traffic if the combination switch is installed.

The engine characteristic can be changed using button **MAP** on the combination switch.

The traction control can also be activated via the combination switch.

6.11 Overview of indicator lamps (EU)

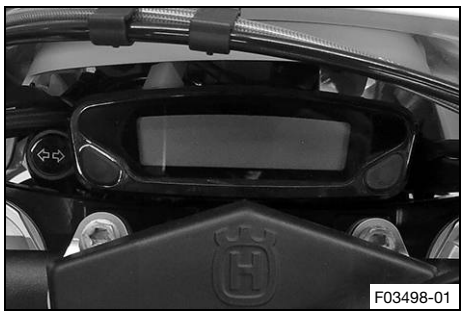

Possible states

	The high beam indicator lamp lights up blue – The high beam is switched on.
	Malfunction indicator lamp lights up/flashes yellow – The OBD has detected an error in the vehicle electronics. Come safely to a halt, and contact an authorized Husqvarna Motorcycles workshop.
	The fuel level warning lamp lights up yellow – The fuel level has reached the reserve mark.
	Turn signal indicator lamp flashes green – The turn signal is switched on.

6.12 Overview of indicator lights (CN)

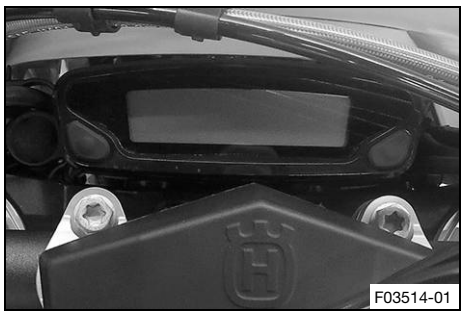

Possible states

	The high beam indicator lamp lights up blue – The high beam is switched on.
	Malfunction indicator lamp lights up/flashes yellow – The OBD has detected an error in the vehicle electronics. Come safely to a halt, and contact an authorized Husqvarna Motorcycles workshop.
	The fuel level warning lamp lights up yellow – The fuel level has reached the reserve mark.

6.13 Opening fuel tank filler cap

Danger

Fire hazard Fuel is highly flammable.

The fuel in the fuel tank expands when warm and can escape if overfilled.

- Do not fuel the vehicle in the vicinity of open flames or lit cigarettes.
- Switch off the engine for refueling.
- Make sure that no fuel is spilled; particularly not on hot parts of the vehicle.
- If any fuel is spilled, wipe it off immediately.
- Observe the specifications for refueling.

Warning

Danger of poisoning Fuel is poisonous and a health hazard.

- Avoid skin, eye and clothing contact with fuel.
- Immediately consult a doctor if you swallow fuel.
- Do not inhale fuel vapors.
- In case of skin contact, rinse the affected area with plenty of water.
- Rinse the eyes thoroughly with water, and consult a doctor in case of fuel contact with the eyes.
- Change your clothing in case of fuel spills on them.
- Keep fuels correctly in a suitable canister, and out of the reach of children.

Note

Environmental hazard Improper handling of fuel is a danger to the environment.

- Do not allow fuel to enter the groundwater, the soil, or the sewage system.

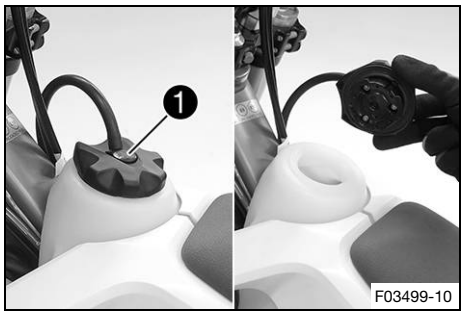

- Press release button 1, turn the fuel tank filler cap counter-clockwise, and lift it off.

6.14 Closing the fuel tank filler cap

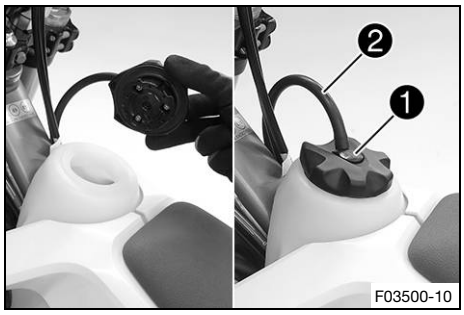

- Mount fuel tank filler cap and turn it clockwise until the release button 1 engages.

Info

Route fuel tank breather hose 2 without kinks.

6.15 Cold start button

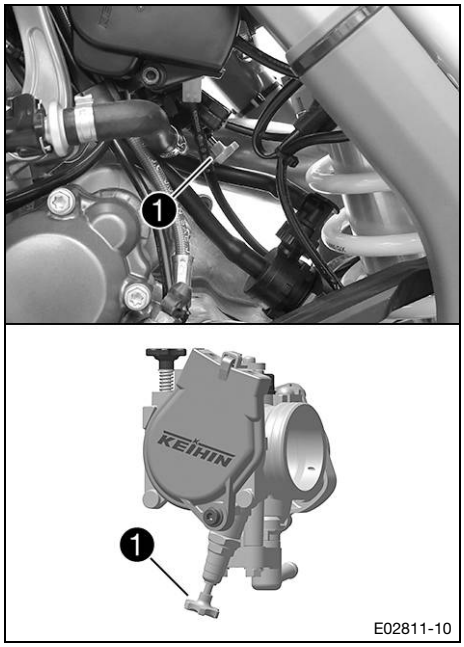

The cold start button ❶ is fitted to the bottom of the throttle valve body.

The electronic fuel injection system extends the injection time if the engine is cold and the ambient temperature is low. To help the engine burn the increased fuel quantity, it must be supplied with additional oxygen by pushing the cold start button.

After briefly opening up the throttle and then releasing the throttle grip again, or turning the throttle grip towards the front, the cold start button returns to its original position.

Info

Check whether the cold start button has returned to its basic position.

Possible states

- The cold start button is activated – The cold start button is pushed in all the way.
- The cold start button is deactivated – The cold start button is in its basic position.

6.16 Idle speed adjusting screw

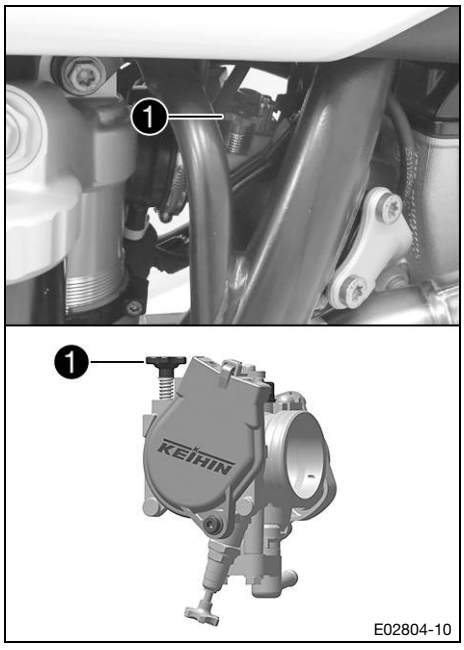

The idle setting of the throttle valve body substantially influences the vehicle's starting behavior, a stable idle speed, and the vehicle's response when the throttle is opened.

An engine with a correctly set idle speed is easier to start than an engine with the idle speed set incorrectly.

The idle speed is adjusted using the idle speed adjusting screw ❶.

Increase the idle speed by turning the idle speed adjusting screw clockwise.

Decrease the idle speed by turning the idle speed adjusting screw counterclockwise.

6.17 Shift lever

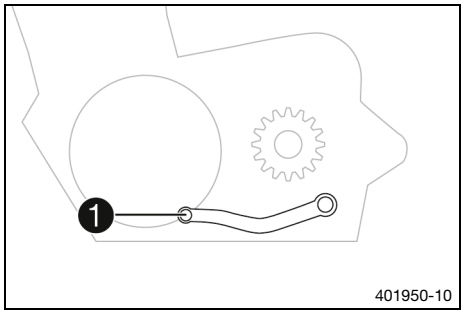

Shift lever ❶ is mounted on the left of the engine.

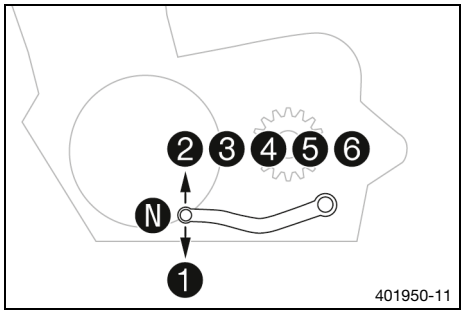

The gear positions can be seen in the figure.
The neutral or idle position is between the first and second gears.

6.18 Foot brake lever

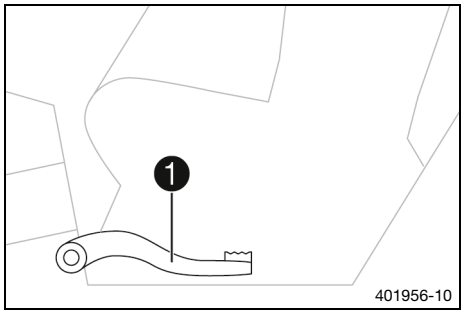

Foot brake lever ❶ is located in front of the right footrest.
The rear brake is engaged with the foot brake lever.

6.19 Side stand

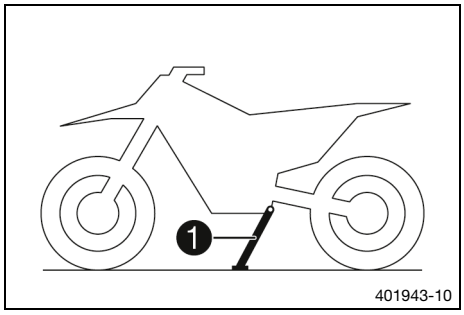

The side stand ❶ is attached to the left side of the vehicle.

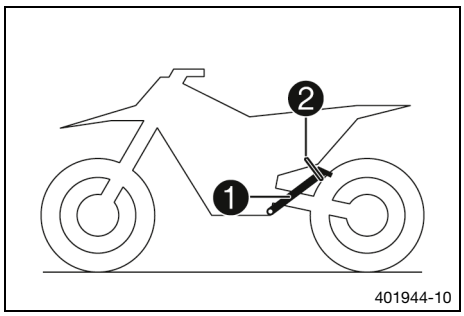

The side stand is used for parking the motorcycle.

Info
When you are riding, side stand ❶ must be folded up and secured with rubber strap ❷.

6.20 Steering lock (EU)

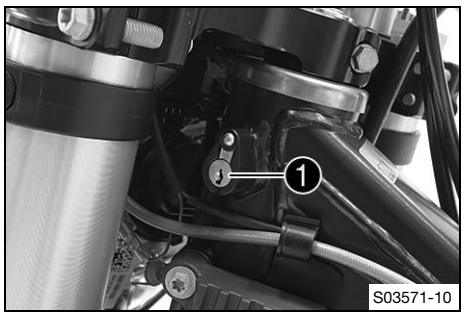

Steering lock ❶ is fitted on the left side of the steering head. The steering lock is used to lock the steering. Steering, and therefore riding, is no longer possible.

6.21 Locking the steering (EU)

Note
Danger of damage The parked vehicle can roll away or fall over.
– Park the vehicle on a firm and level surface.

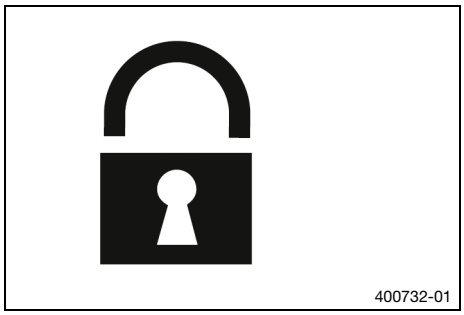

– Park the vehicle.
– Turn handlebar as far as possible to the right.
– Lubricate the steering lock regularly.

Universal oil spray (📖 p. 153)

– Insert the key for the steering lock into the steering lock (📖 p. 23), turn it to the left, push it in, and turn it to the right. Pull out the key for the steering lock.
✔ Steering is no longer possible.

Info
Never leave the key for the steering lock in the steering lock.

6.22 Unlocking the steering (EU)

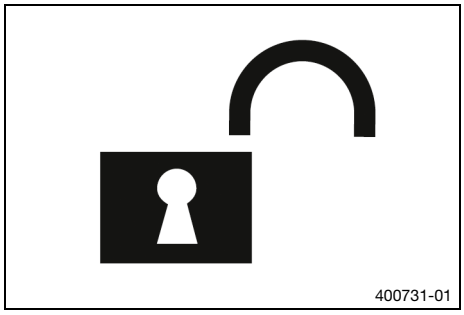

– Insert the key for the steering lock into thesteering lock (p. 23), turn it to the left, pull it out, pull it out, and turn it to the right. Pull out the key for the steering lock.

✔ The handlebar can now be moved again.

Info

Never leave the key for the steering lock in the steering lock.

7.1 Combination instrument overview

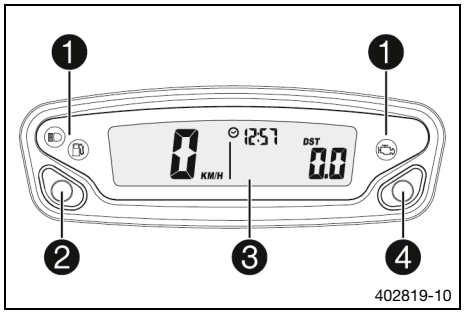

1. Overview of indicator lamps (p. 19) **(EU)**
1. Overview of indicator lights (p. 19) **(CN)**
2. Left button
3. Display
4. Right button

7.2 Activation

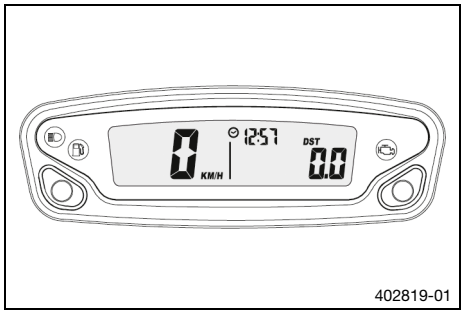

Activating combination instrument

The combination instrument is activated when one of the buttons is pressed or an impulse comes from the wheel speed sensor.

7.3 Message on the combination instrument

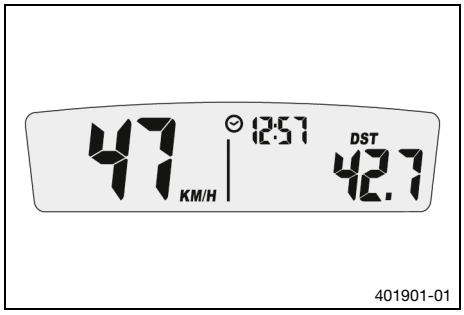

Possible states

LO	Battery voltage of the combination instrument – Battery voltage of the combination instrument is too low. Change combination instrument battery.
	Service – A service is due. Contact an authorized Husqvarna Motorcycles workshop.

7.4 Setting the combination instrument

Condition

The motorcycle is stationary.

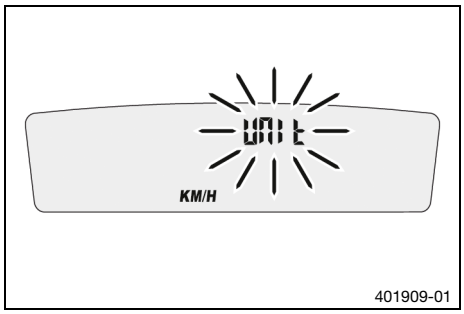

– Press and hold both buttons for 3 – 5 seconds.
  ✓ The Setup menu is displayed. The **UNIT** display flashes.
– Press one of the buttons to select **UNIT** for the speed in kilometers **KM/H** or miles **M/H**.

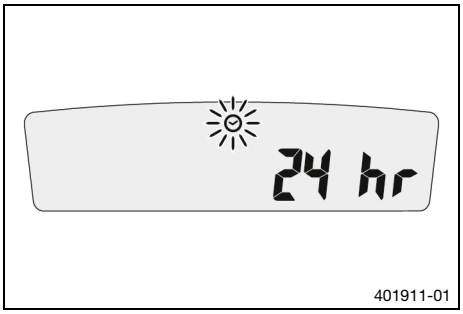

401911-01

– Wait for 5 seconds.
  ✓ Combination instrument changes to the next menu item. The ⏲ symbol flashes.
– Press one of the buttons to select the 24 h display or 12 h display for the clock.

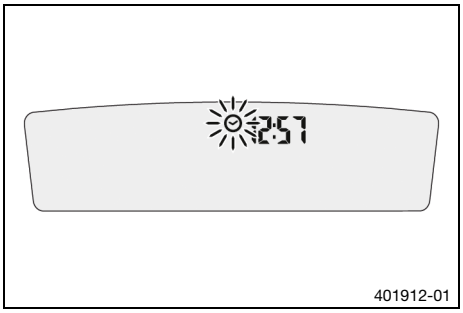

401912-01

– Wait for 5 seconds.
  ✓ Combination instrument changes to the next menu item. The ⏲ symbol flashes.

Resetting the time
  – Press the left button.
    ✓ The value decreases.

Advancing the time
  – Press the right button.
    ✓ The value increases.

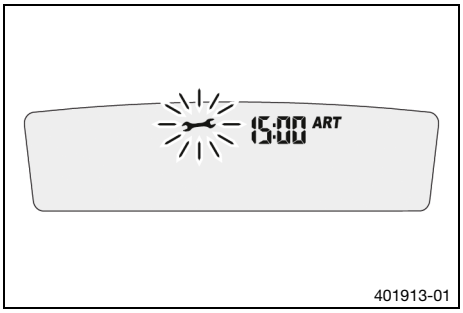

401913-01

– Wait for 5 seconds.
  ✓ Combination instrument changes to the next menu item. The 🔧 symbol flashes.

Shortening the service interval
  – Press the left button.
    ✓ The value decreases.

Extending the service interval
  – Press the right button.
    ✓ The value increases.

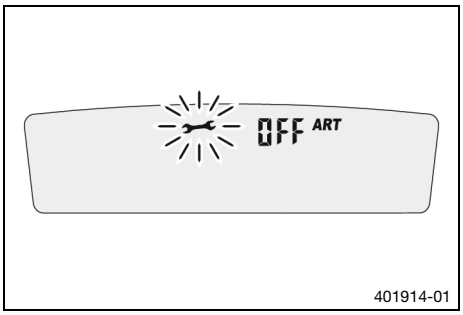

401914-01

Switching off the service interval display
  – Press and hold the left button.
    ✓ **off** appears in the display.

7.5 Adjusting the kilometers or miles

Info
If the unit is changed, the value **ODO** is retained and converted accordingly.

Condition
The motorcycle is stationary.

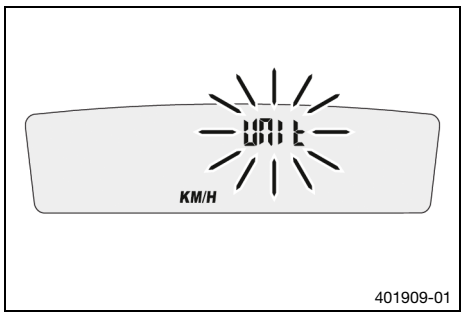

– Press and hold both buttons for 3 - 5 seconds.
  ✓ The Setup menu is displayed. The **UNIT** display flashes.
– Press one of the buttons to select **UNIT** for the speed in kilometers **KM/H** or miles **M/H**.

7.6 Setting the clock

Condition
The motorcycle is stationary.

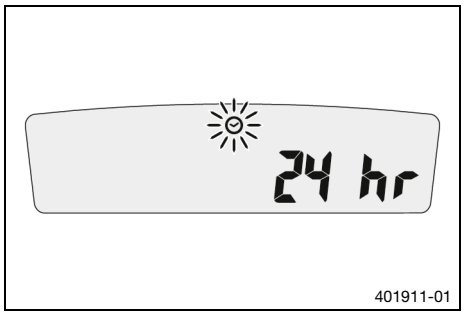

– Press and hold both buttons for 3 – 5 seconds.
  ✓ The Setup menu is displayed. The **UNIT** display flashes.
– Wait for the menu of the clock ⏲ to flash.
– Press one of the buttons to select the 24 h display or 12 h display for the clock.

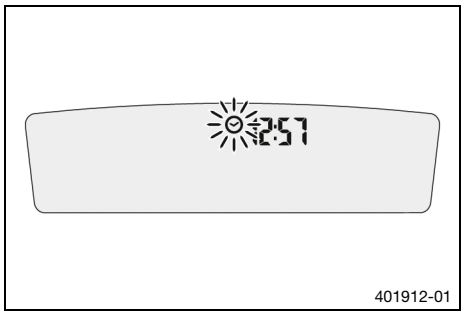

– Wait for 5 seconds.
  ✓ Combination instrument changes to the next menu item. The ⏲ symbol flashes.

Resetting the time
– Press the left button.
  ✓ The value decreases.

Advancing the time
– Press the right button.
  ✓ The value increases.

7.7 Setting the service display

Condition
The motorcycle is stationary.

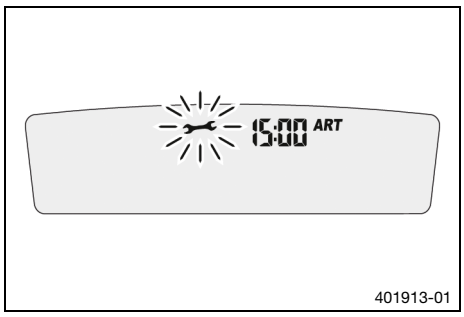

– Press and hold both buttons for 3 – 5 seconds.
  ✓ The Setup menu is displayed. The **UNIT** display flashes.
– Wait for the menu of the service display 🔧 to flash.

Shortening the service interval
– Press the left button.
  ✓ The value decreases.

Extending the service interval
– Press the right button.
  ✓ The value increases.

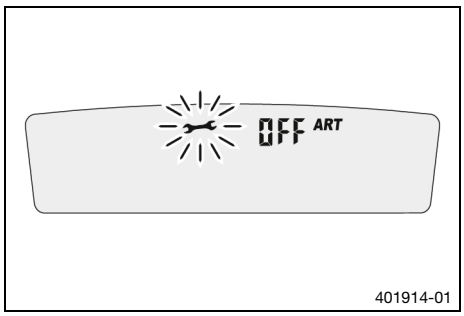

401914-01

Switching off the service interval display

– Press and hold the left button.

✓ **off** appears in the display.

7.8 Speed, time, and DST distance 1

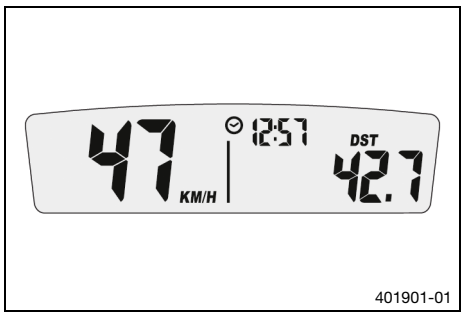

401901-01

– Press one of the buttons until **DST** appears on the combination instrument.

KM/H or **M/H** shows the speed.

⏲ shows the time.

DST shows the distance since the last reset, such as between two refueling stops.

Info

If the value of 39999.9 is exceeded, **DST** is automatically reset to 0.0.

Press the left button briefly.	Next display mode
Press the left button for 3 – 5 seconds.	**DST** can be preset to a value between 0.0 and 39999.9 by pressing the buttons.
Press the right button briefly.	Next display mode
Press the right button for 3 – 5 seconds.	**DST** is reset to 0.0.

7.9 Speed, time, and DST2 distance 2

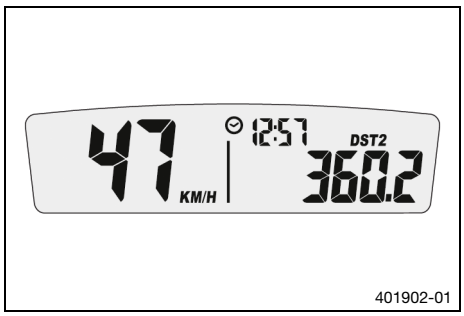

401902-01

– Press one of the buttons until **DST2** appears on the combination instrument.

KM/H or **M/H** shows the speed.

⏲ shows the time.

DST2 shows the distance 2 since the last reset, such as between two refueling stops.

Info

If the value of 39999.9 is exceeded, **DST2** is automatically reset to 0.0.

Press the left button briefly.	Next display mode
Press the left button for 3 – 5 seconds.	**DST2** can be preset to a value between 0.0 and 39999.9 by pressing the buttons.

Press the right button briefly.	Next display mode
Press the right button for 3 – 5 seconds.	**DST2** is reset to 0.0.

7.10 AVG average speed, ART operating hours, and ODO total distance covered

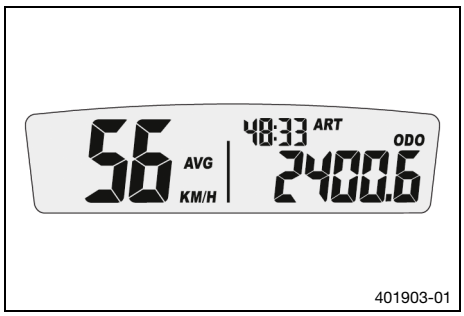

401903-01

– Press one of the buttons until **AVG**, **ART** and **ODO** appear on the combination instrument.

AVG shows the average speed since the last reset.
ART shows the operating hours.
ODO shows the total distance covered.

Press the left button briefly.	Next display mode
Press the left button for 3 – 5 seconds.	The OPEN END WRENCH SYMBOL shows the remaining operating hours until the next service is due.
Press the right button briefly.	Next display mode
Press the right button for 3 – 5 seconds.	**AVG** is reset to 0.0.

8.1 Advice on preparing for first use

Danger

Danger of accidents A rider who is not fit to ride poses a danger to him or herself and others.

– Do not operate the vehicle if you are not fit to ride due to alcohol, drugs or medication.
– Do not operate the vehicle if you are physically or mentally impaired.

Warning

Risk of injury Missing or poor protective clothing presents an increased safety risk.

– Wear appropriate protective clothing such as helmet, boots, gloves as well as trousers and a jacket with protectors on all rides.
– Always wear protective clothing that is in good condition and meets the legal regulations.

Warning

Danger of crashing Different tire tread patterns on the front and rear wheel impair the handling characteristic.

Different tire tread patterns can make the vehicle significantly more difficult to control.

– Make sure that only tires with a similar tire tread pattern are fitted to the front and rear wheel.

Warning

Danger of accidents An unadapted riding style impairs the handling characteristic.

– Adapt your riding speed to the road conditions and your riding ability.

Warning

Danger of accidents The vehicle is not designed to carry passengers.

– Do not ride with a passenger.

Warning

Danger of accidents The brake system fails in the event of overheating.

If the foot brake lever is not released, the brake linings drag continuously.

– Take your foot off the foot brake lever if you do not want to brake.

Warning

Danger of accidents Total weight and axle loads influence the handling characteristic.

– Do not exceed the maximum permissible overall weight or the axle loads.

Warning

Risk of injury People who act without authorization may not be familiar with the vehicle.

– Do not leave the vehicle unattended if the engine is running.
– Protect the vehicle against access by unauthorized persons.

Info

When using your motorcycle, remember that others may feel disturbed by excessive noise.

– Make sure that the pre-sale inspection work has been carried out by an authorized Husqvarna Motorcycles workshop.
  ✓ You will receive a delivery certificate when the vehicle is handed over.
– Before riding for the first time, read the entire Owner's Manual carefully.
– Get to know the controls.
– Adjust basic position of the clutch lever. (📖 p. 83)

– Adjust basic position of the hand brake lever. (p. 87)
– Adjust the basic position of the foot brake lever. 🔧 (p. 93)
– Adjust the basic position of the shift lever. 🔧 (p. 126)
– Get used to the handling characteristics of the motorcycle on a suitable surface before undertaking more challenging trips.

Info
When offroad, it is recommended that you are accompanied by another person on another vehicle so that you can help each other.

– Try also to ride as slowly as possible and in a standing position to get a better feel for the motorcycle.
– Do not make any off-road trips that exceed your ability and experience.
– Hold the handlebar firmly with both hands and keep your feet on the footrests when riding.
– If you carry any luggage, make sure you fix it firmly as close as possible to the center of the vehicle and ensure even weight distribution between the front and rear wheels.

Info
Motorcycles react sensitively to any changes of weight distribution.

– The maximum permissible overall weight and the maximum permissible axle loads must not be exceeded.
Guideline

Maximum permissible overall weight	335 kg (739 lb.)
Maximum permissible front axle load	145 kg (320 lb.)
Maximum permissible rear axle load	190 kg (419 lb.)

Info
The spoke tension must be checked after half an hour of operation.

– Run in the engine. (p. 31)

8.2 Running-in the engine

– During the running-in phase, do not exceed the specified engine speed and engine performance.
Guideline

Maximum engine speed	
During the first operating hour	7,000 rpm
Maximum engine performance	
During the first 3 operating hours	≤ 75 %

– Avoid fully opening the throttle!

8.3 Starting power of lithium-ion batteries at low temperatures

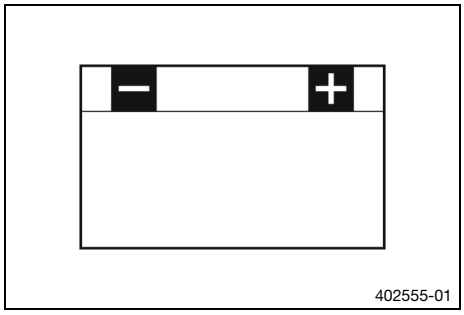

Lithium-ion batteries are far lighter than lead batteries, have a low self-discharge rate, and have more starting power at temperatures over 6 °C (43 °F).

Several attempts to start may be required. Press the start button for 5 seconds, and wait 15 seconds between attempts. At low temperatures, wait for 30 seconds. The pauses are necessary so that the heat created can distribute through the lithium-ion battery and the lithium-ion battery is not damaged.

The starting power increases as the battery warms up.

Always make sure the lithium-ion battery is charged to that there is enough power to spare for starting at low temperatures.

After 6 unsuccessful starting attempts, do not try again, and check the vehicle for other errors instead.

8.4 Preparing the vehicle for difficult operating conditions

Info
Use of the vehicle under difficult conditions, such as on sand or on wet and muddy surfaces, can result in significantly increased wear of components, such as the drive train, brake system, or suspension components. For this reason, it may be necessary to inspect or replace parts before the next scheduled service.

– Clean the air filter and air filter box. (p. 68)

Info
Check the air filter approx. every 30 minutes.

– Check the electrical connector for humidity and corrosion and to ensure it is firmly seated.
  » If humidity, corrosion, or damage is found:
    – Clean and dry the connector, or change it if necessary.

Difficult operating conditions are:
- Rides on dry sand. (p. 32)
- Rides on wet sand. (p. 33)
- Rides on wet and muddy circuits. (p. 33)
- Rides at high temperatures or slow riding. (p. 34)
- Riding at low temperatures and in snow. (p. 34)

8.5 Preparing the vehicle for riding on dry sand



– Mount the air filter dust cover.

Air filter dust cover (79006920000)

Info
Read the fitting instructions for **Husqvarna Motorcycles** accessories.



– Mount the air filter sand cover.

Air filter sand cover (79006922000)

Info
Read the fitting instructions for **Husqvarna Motorcycles** accessories.



– Clean the chain.
– Mount the steel sprocket.
– Grease the chain.

Universal oil spray (📖 p. 153)

– Clean the radiator fins.
– Straighten the bent radiator fins carefully.

8.6 Preparing the vehicle for riding on wet sand

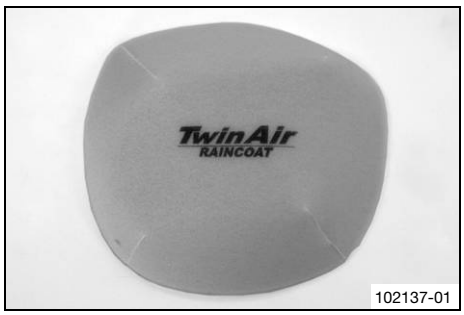

– Mount the air filter rain cover.

Air filter rain cover (79006921000)

Info
Read the fitting instructions for **Husqvarna Motorcycles** accessories.



– Clean the chain.
– Mount the steel sprocket.
– Grease the chain.

Universal oil spray (📖 p. 153)

– Clean the radiator fins.
– Straighten the bent radiator fins carefully.

8.7 Preparing the vehicle for riding on wet and muddy circuits



– Mount the air filter rain cover.

Air filter rain cover (79006921000)

Info
Read the fitting instructions for **Husqvarna Motorcycles** accessories.


600868-01

– Mount the steel sprocket.
– Clean the motorcycle. (p. 132)
– Straighten the bent radiator fins carefully.

8.8 Preparing vehicle for high temperatures or slow riding


600868-01

– Adjust the secondary drive to the road conditions.

Info
The engine oil heats up quickly when the clutch is operated frequently due to an excessively high secondary ratio.

– Clean the chain.

Chain cleaner (p. 152)

– Clean the radiator fins.
– Straighten bent radiator fins carefully.
– Check the coolant level. (p. 118)

8.9 Preparing the vehicle for low temperatures or snow

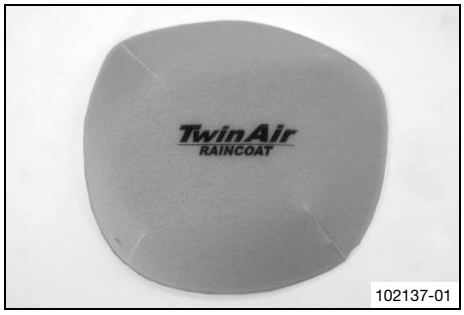

102137-01

– Mount the air filter rain cover.

Air filter rain cover (79006921000)

Info
Read the fitting instructions for **Husqvarna Motorcycles** accessories.

9.1 Checks and maintenance measures when preparing for use

Info
Before every trip, check the condition of the vehicle and ensure that it is safe to operate.
The vehicle must be in perfect technical condition when it is being operated.

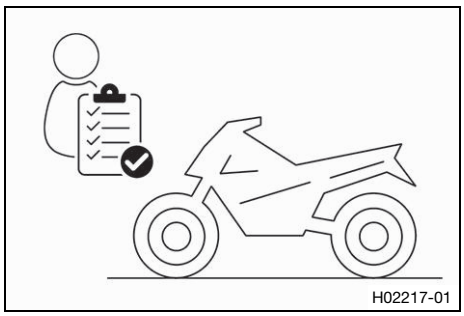
H02217-01

- Check the engine oil level. (p. 128)
- Check the electrical system.
- Check the front brake fluid level. (p. 88)
- Check the rear brake fluid level. (p. 93)
- Check the front brake linings. (p. 89)
- Check the rear brake linings. (p. 95)
- Check that the brake system is functioning properly.
- Check the coolant level. (p. 118)
- Check for chain dirt accumulation. (p. 75)
- Check the chain, rear sprocket, engine sprocket, and chain guide. (p. 78)
- Check the chain tension. (p. 76)
- Check the tire condition. (p. 102)
- Check the tire pressure. (p. 102)
- Check the spoke tension. (p. 103)

Info
The spoke tension must be checked regularly as incorrect spoke tension will strongly impair riding safety.

- Clean the dust boots of the fork legs. (p. 54)
- Bleed the fork legs. (p. 53)
- Check the air filter.
- Check the settings of all controls and ensure that they can be operated smoothly.
- Check all screws, nuts, and hose clips regularly for tightness.
- Check the fuel level.

9.2 Starting the vehicle

Danger
Danger of poisoning Exhaust gases are toxic and inhaling them may result in unconsciousness and death.
- Always make sure there is sufficient ventilation when running the engine.
- Use effective exhaust extraction when starting or running the engine in an enclosed space.

Note
Engine damage High revving speed with a cold engine negatively impacts the lifespan of the engine.
- Always run the engine warm at a low speed.

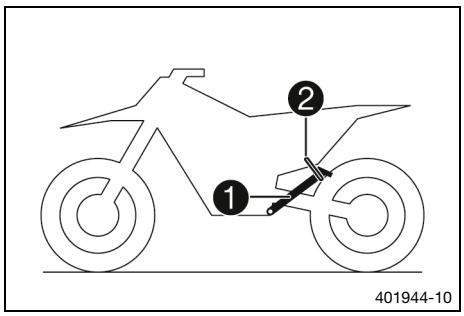

– Take the motorcycle off side stand ❶ and secure the side stand with rubber strap ❷.
– Shift the transmission into neutral.

(EU)

– Turn the emergency OFF switch to the position ⟳.

Condition

Ambient temperature: < 20 °C (< 68 °F)

– Push the cold start button in all the way.

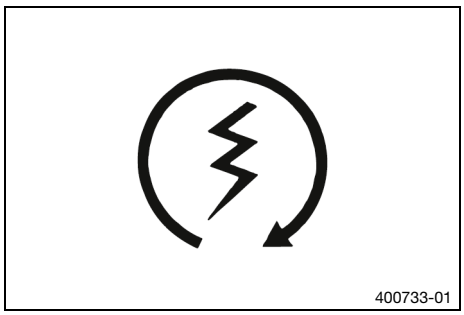

– Press the start button.

Info

Press the start button for a maximum of 5 seconds. Wait for 15 seconds before a further attempt at starting.

At low temperatures, wait for 30 seconds.

At temperatures below 6 °C (43 °F), several attempts at starting may be necessary to warm-up the lithium-ion battery and thereby increase the starting power.

After 6 unsuccessful starting attempts, do not try again, and check the vehicle for other errors instead.

During the starting process, the malfunction indicator lamp lights up.

9.3 Activating traction control

Warning

Voiding of the government approval for road use and the insurance coverage If the combination switch is mounted, the vehicle's road permit, if any, expires.

– Only operate the vehicle in closed-off areas remote from public road traffic if the combination switch is installed.

Info

The traction control reduces excessive slip on the rear wheel in favor of more control and propulsion, particularly in wet conditions.

When traction control is switched off, the rear wheel may spin more during high acceleration and on surfaces with low grip.

Traction control can be switched on or off during the ride.

The setting most recently selected is activated again when restarting.

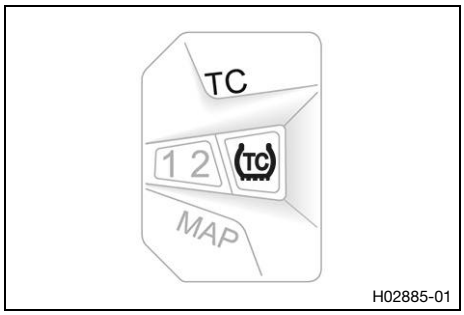

– Press button **TC** to switch the traction control on or off.

Guideline

Engine speed	≤ 4,000 rpm

✓ The **TC** LED lights up when the traction control is activated.

9.4 Starting off

Info
When you are riding, the side stand must be folded up and secured with the rubber strap.

– Pull the clutch lever, shift into first gear, release the clutch lever slowly and at the same time open the throttle carefully.

9.5 Shifting, riding

Warning
Danger of accidents If you change down at high engine speed, the rear wheel blocks and the engine races.
– Do not change into a low gear at high engine speed.

Info
If unusual noises occur while riding, stop immediately, switch off the engine, and contact an authorized Husqvarna Motorcycles workshop.
First gear is used for starting off and for steep inclines.

– Shift into a higher gear when conditions allow (incline, road situation, etc.). To do so, release the throttle while simultaneously pulling the clutch lever, shift into the next gear, release the clutch lever and open the throttle.
– After reaching maximum speed by fully opening the throttle grip, turn the throttle back so it is ¾ open. This will barely reduce the speed, but fuel consumption will be considerably lower.
– Always open the throttle only as much as the engine can handle – abrupt throttle opening increases fuel consumption.
– To shift down, apply the brakes and close the throttle at the same time.
– Pull the clutch lever and shift into a lower gear, release the clutch lever slowly, and either open the throttle or shift again.
– Switch off the engine if running at idle speed or stationary for a long time.

Guideline

≥ 2 min

– Avoid frequent and lengthy slipping of the clutch. This causes the engine oil, engine and cooling system to heat up.
– Ride at a low engine speed instead of at a high engine speed with a slipping clutch.

9.6 Braking

Warning
Danger of accidents Excessively forceful application of the brakes blocks the wheels.
– Adjust application of the brakes to the respective riding situation and riding surface conditions.

Warning
Danger of accidents A spongy pressure point on the front or rear brake reduces braking efficiency.
– Check the brake system and do not continue riding until the problem is eliminated. (Your authorized Husqvarna Motorcycles workshop will be glad to help.)

Warning

Danger of accidents Moisture and dirt impair the brake system.

– Brake carefully several times to dry out and remove dirt from the brake linings and the brake discs.

– On sandy, wet, or slippery surfaces, use the rear brake.
– Always finish braking before you go into a bend. Change down to a lower gear appropriate to your road speed.
– Use the braking effect of the engine on long downhill stretches. Change down one or two gears, but do not over-rev the engine. You will have to apply the brakes far less frequently as a result and the brake system will not overheat.

9.7 Stopping, parking

Warning

Risk of injury People who act without authorization may not be familiar with the vehicle.

– Do not leave the vehicle unattended if the engine is running.
– Protect the vehicle against access by unauthorized persons.

Warning

Danger of burns Some vehicle components become very hot when the vehicle is operated.

– Do not touch any parts such as the exhaust system, radiator, engine, shock absorber, or brake system before the vehicle parts have cooled down.
– Let the vehicle parts cool down before you perform any work on the vehicle.

Note

Material damage The vehicle may be damaged by incorrect procedure when parking.

Significant damage may be caused if the vehicle rolls away or falls over.

The components for parking the vehicle are designed only for the weight of the vehicle.

– Park the vehicle on a firm and level surface.
– Ensure that nobody sits on the vehicle when the vehicle is parked on a stand.

Note

Fire hazard Hot vehicle components pose a fire hazard and explosion risk.

– Do not park the vehicle near to materials which are highly flammable or explosive.
– Allow the vehicle to cool down before covering it.

– Apply the brakes on the motorcycle.
– Shift the transmission into neutral.
– Press and hold the stop button ⊠ while the engine is idling until the engine stops.
– Park the motorcycle on firm ground.

9.8 Transporting

Note

Danger of damage The parked vehicle can roll away or fall over.

– Park the vehicle on a firm and level surface.

Note

Fire hazard Hot vehicle components pose a fire hazard and explosion risk.

– Do not park the vehicle near to materials which are highly flammable or explosive.

– Allow the vehicle to cool down before covering it.

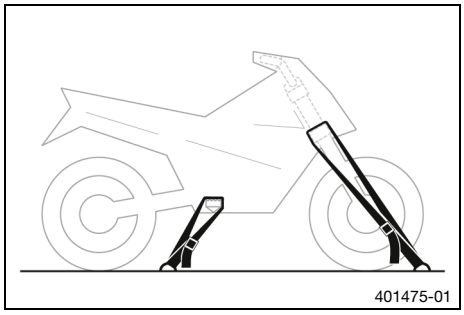

– Switch off the engine.

– Use tension belts or other suitable devices to secure the motorcycle against falling over or rolling away.

9.9 Refueling

Danger

Fire hazard Fuel is highly flammable.

The fuel in the fuel tank expands when warm and can escape if overfilled.

– Do not fuel the vehicle in the vicinity of open flames or lit cigarettes.
– Switch off the engine for refueling.
– Make sure that no fuel is spilled; particularly not on hot parts of the vehicle.
– If any fuel is spilled, wipe it off immediately.
– Observe the specifications for refueling.

Warning

Danger of poisoning Fuel is poisonous and a health hazard.

– Avoid skin, eye and clothing contact with fuel.
– Immediately consult a doctor if you swallow fuel.
– Do not inhale fuel vapors.
– In case of skin contact, rinse the affected area with plenty of water.
– Rinse the eyes thoroughly with water, and consult a doctor in case of fuel contact with the eyes.
– Change your clothing in case of fuel spills on them.

Note

Material damage Inadequate fuel quality causes the fuel filter to quickly become clogged.

In some countries and regions, the available fuel quality and cleanliness may not be sufficient. This will result in problems with the fuel system.

– Refuel only with clean fuel that meets the specified standards. (Your authorized Husqvarna Motorcycles workshop will be glad to help.)

Note

Environmental hazard Improper handling of fuel is a danger to the environment.

– Do not allow fuel to enter the groundwater, the soil, or the sewage system.

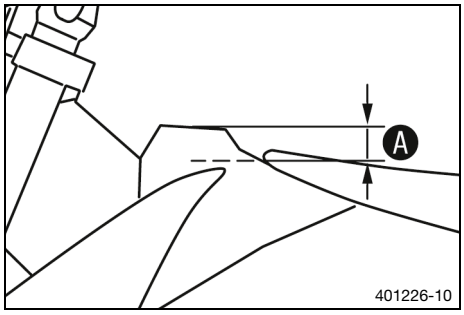

– Switch off engine.
– Open fuel tank filler cap. (p. 20)
– Fill the fuel tank with fuel up to measurement A.

Guideline

Measurement of A	35 mm (1.38 in)

Super unleaded (ROZ 95) (p. 151)	9.0 l (2.38 US gal)

– Close the fuel tank filler cap. (p. 20)

10.1 Additional information

Any further work that results from the compulsory work or from the recommended work must be ordered separately and invoiced separately.
Different service intervals may apply in your country, depending on the local operating conditions.
Individual service intervals and scopes may change in the course of technical developments. The most up-to-date service schedule can always be found on Husqvarna Motorcycles Dealer.net. Your authorized Husqvarna Motorcycles dealer will be glad to advise you.

10.2 Required work

	Every 10 operating hours when used for motorsports	Every 45 operating hours	Every 30 operating hours	Every 15 operating hours	After 1 operating hour
Read out the fault memory using the Husqvarna Motorcycles diagnostics tool. 🔧	○	●	●	●	●
Check that the electrical system is functioning properly.	○	●	●	●	●
Check and charge the 12-V battery. 🔧		●	●	●	●
Check the front brake linings. (📖 p. 89)		●	●	●	●
Check the rear brake linings. (📖 p. 95)		●	●	●	●
Check the brake discs. (📖 p. 87)		●	●	●	●
Check the brake lines for damage and leakage.		●	●	●	●
Check the rear brake fluid level. (📖 p. 93)		●	●	●	●
Check the free travel of the foot brake lever. (📖 p. 92)		●	●	●	●
Check the frame. 🔧 (📖 p. 81)		●	●	●	●
Check the link fork. 🔧 (📖 p. 81)		●	●	●	●
Check the fork bearing for play. 🔧			●		
Check the shock absorber heim joint for play. 🔧		●	●	●	
Check the shock absorber linkage. 🔧		●	●	●	
Check the tire condition. (📖 p. 102)	○	●	●	●	●
Check the tire pressure. (📖 p. 102)	○	●	●	●	●
Check the wheel bearing for play. 🔧		●	●	●	●
Check the wheel hubs. 🔧		●	●	●	●
Check the rim run-out. 🔧	○	●	●	●	
Check the spoke tension. (📖 p. 103)	○	●	●	●	●
Check the chain, rear sprocket, engine sprocket, and chain guide. (📖 p. 78)		●	●	●	●
Check the chain tension. (📖 p. 76)	○	●	●	●	●
Grease all moving parts (e.g. side stand, hand lever, chain, etc.) and check for smooth operation. 🔧		●	●	●	●
Check/correct the fluid level of hydraulic clutch. (📖 p. 83)		●	●	●	●
Check the front brake fluid level. (📖 p. 88)		●	●	●	●
Check the steering head bearing for play. (📖 p. 59)	○	●	●	●	
Check the valve clearance. 🔧	○		●		
Check the clutch. 🔧			●		●
Change the cover seal and radial shaft seal rings of the water pump. 🔧			●		
Change the engine oil and oil filter, clean the oil screen. 🔧 (📖 p. 128)	○	●	●	●	●

	Every 10 operating hours when used for motorsports	Every 45 operating hours	Every 30 operating hours	Every 15 operating hours	After 1 operating hour
Check all hoses (e.g. fuel, cooling, bleeder, drainage hoses, etc.) and sleeves for cracking, tightness, and correct routing. 🔧	○	●	●	●	●
Check the antifreeze and coolant level. (📖 p. 117)	○	●	●	●	●
Check the cables for damage and for routing without kinks. 🔧		●	●	●	●
Check that the throttle cables are undamaged, routed without sharp bends, and set correctly.	○	●	●	●	●
Clean the air filter and air filter box. 🔧 (📖 p. 68)		●	●	●	●
Change the glass fiber yarn filling in the main silencer. 🔧 (📖 p. 71)			●		●
Service the fork. 🔧				●	
Perform the shock absorber service. 🔧				●	
Check the tightness of the easily accessible, safety-relevant screws and nuts. 🔧	○	●	●	●	●
Check the headlight setting. (📖 p. 114)	○	●	●	●	●
Change the fuel screen. 🔧 (📖 p. 127)	○	●	●	●	●
Check the fuel pressure. 🔧		●	●	●	●
Check the idle speed. 🔧	○	●	●	●	●
Check that the radiator fan is functioning properly. 🔧	○	●	●	●	
Final check: Check the vehicle is roadworthy and take a test ride. 🔧	○	●	●	●	●
Read out the fault memory after the test ride using the Husqvarna Motorcycles diagnostics tool. 🔧	○	●	●	●	●
Make a service entry in **Husqvarna Motorcycles Dealer.net**. 🔧	○	●	●	●	●

○ One-time interval

● Periodic interval

10.3 Recommended work

	every 48 months	every 12 months	Every 135 operating hours	Every 70 operating hours when used for motorsports	After 20 operating hours	After 10 operating hours
Change the front brake fluid. 🔧	●	●				
Change the rear brake fluid. 🔧	●	●				
Change the hydraulic clutch fluid. 🔧 (📖 p. 84)	●	●				
Lubricate the steering head bearing. 🔧 (📖 p. 61)	●	●				
Service the fork. 🔧						○
Perform the shock absorber service. 🔧					○	
Change the fuel filter. 🔧			●			
Change the coolant. 🔧 (📖 p. 120)	●					

	every 48 months	every 12 months	Every 135 operating hours	Every 70 operating hours when used for motorsports	After 20 operating hours	After 10 operating hours
Perform engine service including removing and installing the engine. (Change the spark plug and spark plug connector. Change the piston. Check/measure the cylinder. Check the cylinder head. Change the valves, valve springs, and valve spring seats. Check the camshaft and cam lever. Change the connecting rod, conrod bearing and crank pin. Change the radial shaft seal rings of the water pump. Check the transmission and the shift mechanism. Check the oil pressure control valve. Change the suction pump. Check the force pump and lubrication system. Check the timing assembly. Change the timing chain. Change all engine bearings. Change the freewheel.) 🔧				•	•	

○ One-time interval

• Periodic interval

11.1 Checking the basic chassis setting with rider's weight

Info
When adjusting the basic chassis setting, first adjust the shock absorber and then the fork.

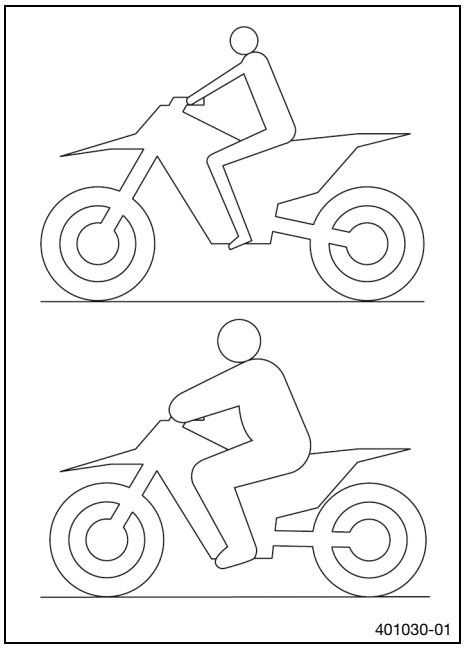

- For optimal motorcycle riding characteristics and to avoid damage to forks, shock absorbers, link fork and frame, the basic settings of the suspension components must match the rider's weight.
- As delivered, Husqvarna motorcycles are adjusted for an average rider's weight (with full protective clothing).

  Guideline

Standard rider weight	75 … 85 kg (165 … 187 lb.)

- If the rider's weight is above or below this range, the basic setting of the suspension components must be adjusted accordingly.
- Small weight differences can be compensated by adjusting the spring preload, but in the case of large weight differences, the springs must be replaced.

11.2 Compression damping of the shock absorber

The compression damping of the shock absorber is divided into two ranges: high-speed and low-speed.
High-speed and low-speed refer to the compression speed of the rear wheel suspension and not to the vehicle speed.
The high-speed compression adjuster has an effect, for example, when landing after a jump: the rear wheel suspension compresses quickly.
The low-speed compression adjuster has an effect, for example, when riding over long ground swells: the rear wheel suspension compresses slowly.
These two ranges can be adjusted separately, although the transition between high-speed and low-speed is gradual. Thus, modifications in the high-speed range affect the compression damping in the low-speed range and vice versa.

11.3 Adjusting the low-speed compression damping of the shock absorber

Caution
Risk of injury Parts of the shock absorber will move around if the shock absorber is detached incorrectly.

The shock absorber is filled with highly compressed nitrogen.

- Please follow the description provided. (Your authorized Husqvarna Motorcycles workshop will be glad to help.)

Info
The effect of the low-speed compression adjuster can be seen in slow to normal compression of the shock absorber.

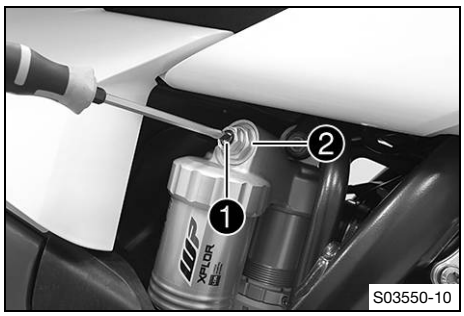

– Turn adjusting screw ❶ clockwise with a screwdriver as far as the last perceptible click.

Info
Do not loosen fitting ❷!

– Turn counterclockwise by the number of clicks corresponding to the shock absorber type.

Guideline

Lowspeed compression damping	
Comfort	17 clicks
Standard	15 clicks
Sport	13 clicks

Info
Turn clockwise to increase damping; turn counterclockwise to reduce damping.

11.4 Adjusting the high-speed compression damping of the shock absorber

Caution
Risk of injury Parts of the shock absorber will move around if the shock absorber is detached incorrectly.

The shock absorber is filled with highly compressed nitrogen.

– Please follow the description provided. (Your authorized Husqvarna Motorcycles workshop will be glad to help.)

Info
The effect of the high speed compression adjuster can be seen in the fast compression of the shock absorber.



– Using an open end wrench, turn adjusting screw ❶ clockwise all the way.

Info
Do not loosen fitting ❷!

– Turn counterclockwise by the number of turns corresponding to the shock absorber type.

Guideline

Highspeed compression damping	
Comfort	2.5 turns
Standard	2 turns
Sport	1.5 turns

Info
Turn clockwise to increase damping; turn counterclockwise to reduce damping.

11.5 Adjusting the rebound damping of the shock absorber

Caution

Risk of injury Parts of the shock absorber will move around if the shock absorber is detached incorrectly.

The shock absorber is filled with highly compressed nitrogen.

– Please follow the description provided. (Your authorized Husqvarna Motorcycles workshop will be glad to help.)

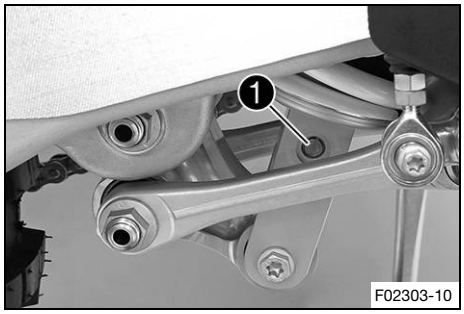

– Turn adjusting screw ❶ clockwise up to the last perceptible click.
– Turn counterclockwise by the number of clicks corresponding to the shock absorber type.

Guideline

Rebound damping	
Comfort	17 clicks
Standard	15 clicks
Sport	13 clicks

Info

Turn clockwise to increase the damping; turn counterclockwise to reduce damping when the shock absorber rebounds.

11.6 Measuring the dimension of the rear wheel unloaded

Preparatory work

– Raise the motorcycle with a lift stand. (📖 p. 53)

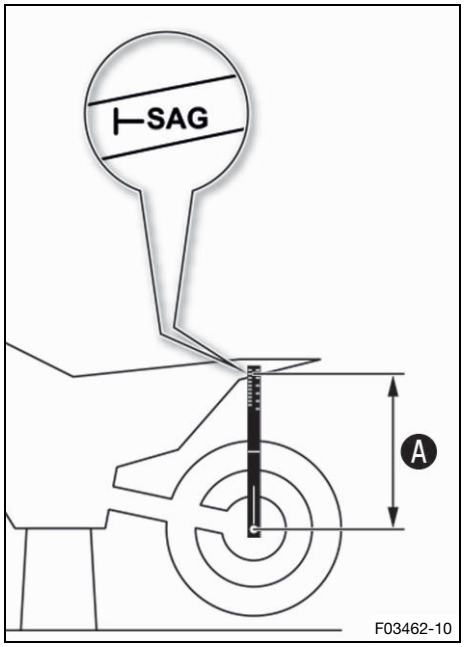

Main work

– Position the sag gage in the rear axle and measure the distance to marking **SAG** on the rear fender.

Sag gauge (00029090500)
Pin, sag scale (00029990010)

– Note the value as dimension Ⓐ.

Finishing work

– Remove the motorcycle from the lift stand. (📖 p. 53)

11.7 Checking the static sag of the shock absorber

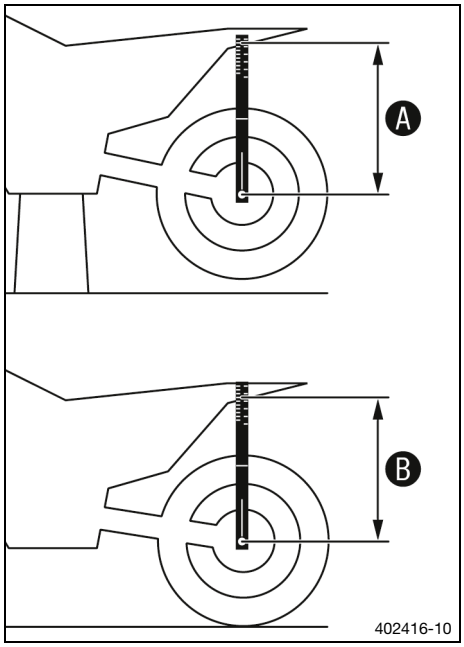

– Measure dimension Ⓐ of rear wheel unloaded. (📖 p. 46)
– Hold the motorcycle upright with aid of an assistant.
– Measure the distance again between the rear axle and marking **SAG** on the rear fender using the sag gage.
– Note the value as dimension Ⓑ.

Info
The static sag is the difference between measurements Ⓐ and Ⓑ.

– Check the static sag.

Static sag	37 mm (1.46 in)

» If the static sag is less or more than the specified value:
– Adjust the spring preload of the shock absorber. 🔧 (📖 p. 48)

11.8 Checking the riding sag of the shock absorber

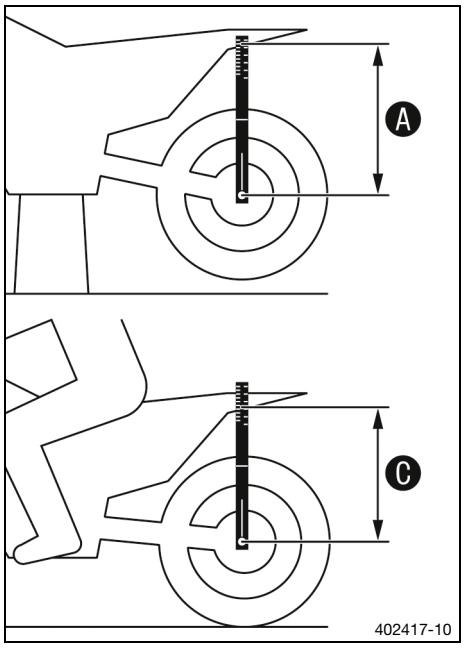

– Measure dimension Ⓐ of rear wheel unloaded. (📖 p. 46)
– With another person holding the motorcycle, the rider, wearing full protective clothing, sits on the seat in a normal sitting position (feet on footrests) and bounces up and down a few times.
✔ The rear wheel suspension levels out.
– Another person again measures the distance between the rear axle and marking **SAG** on the rear fender using the sag gage.
– Note the value as dimension Ⓒ.

Info
The riding sag is the difference between measurements Ⓐ and Ⓒ.

– Check riding sag.
Guideline

Riding sag	110 mm (4.33 in)

» If the riding sag differs from the specified measurement:
– Adjust the riding sag. 🔧 (📖 p. 49)

11.9 Adjusting the spring preload of the shock absorber

Caution

Risk of injury Parts of the shock absorber will move around if the shock absorber is detached incorrectly.

The shock absorber is filled with highly compressed nitrogen.

– Please follow the description provided. (Your authorized Husqvarna Motorcycles workshop will be glad to help.)

Info

Before changing the spring preload, make a note of the present setting, e.g., by measuring the spring length.

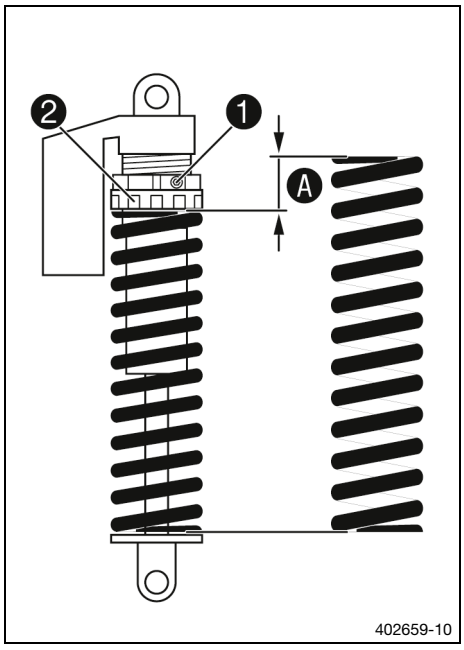

Preparatory work

– Raise the motorcycle with a lift stand. (p. 53)
– Remove the shock absorber. (p. 62)
– After removing the shock absorber, clean it thoroughly.

Main work

– Loosen screw 1.
– Turn adjusting ring 2 until the spring is no longer under tension.

Hook wrench (90129051000)

Info

If the spring cannot be fully released, the spring must be removed to accurately measure the spring length.

– Measure the total spring length while the spring is not under tension.
– Tension the spring by turning adjusting ring 2 to specified dimension A.

Guideline

Spring preload	12 mm (0.47 in)

Info

Depending on the static sag and/or the riding sag, it may be necessary to increase or decrease the spring preload.

– Tighten screw 1.

Guideline

Screw, shock absorber adjusting ring	M5	5 Nm (3.7 lbf ft)

Finishing work

– Install the shock absorber. (p. 64)
– Remove the motorcycle from the lift stand. (p. 53)

11.10 Adjusting the riding sag

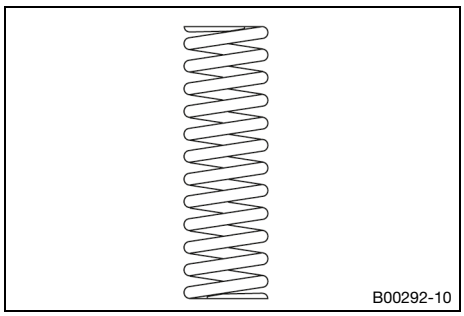

Preparatory work

– Raise the motorcycle with a lift stand. (p. 53)
– Remove the shock absorber. (p. 62)
– After removing the shock absorber, clean it thoroughly.

Main work

– Choose and mount a suitable spring.

Guideline

Spring rate	
Weight of rider: 65 … 75 kg (143 … 165 lb.)	39 N/mm (223 lb/in)
Weight of rider: 75 … 85 kg (165 … 187 lb.)	42 N/mm (240 lb/in)
Weight of rider: 85 … 95 kg (187 … 209 lb.)	45 N/mm (257 lb/in)

Info
The spring rate is shown on the outside of the spring. Smaller weight differences can be compensated by changing the spring preload.

Finishing work

– Install the shock absorber. (p. 64)
– Remove the motorcycle from the lift stand. (p. 53)
– Check the static sag of the shock absorber. (p. 47)
– Check the riding sag of the shock absorber. (p. 47)
– Adjust the rebound damping of the shock absorber. (p. 46)

11.11 Checking the basic setting of the fork

Info
For various reasons, no exact riding sag can be determined for the fork.

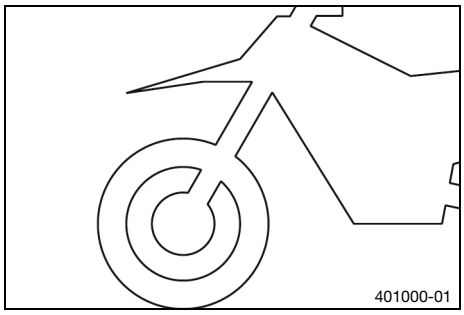

– As with the shock absorber, smaller differences in the rider's weight can be compensated by the spring preload.
– However, if the fork frequently bottoms out (hard end stop on compression), harder springs must be fitted to avoid damage to the fork and frame.
– If the fork feels unusually hard after extended periods of operation, the fork legs need to be bled.

11.12 Adjusting the compression damping of the fork

Info
The hydraulic compression damping determines the fork suspension behavior.

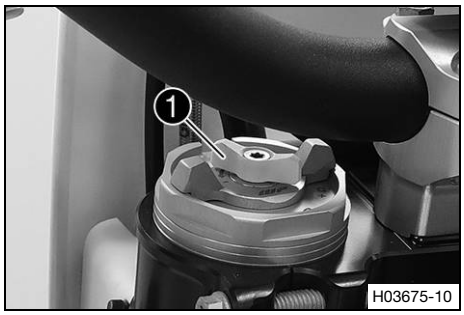

– Turn white adjuster ❶ clockwise as far as it will go.

Info
Adjuster ❶ is located at the upper end of the left fork leg.
The compression damping is located in left fork leg **COMP** (white adjuster). The rebound damping is located in right fork leg **REB** (red adjuster).

– Turn counterclockwise by the number of clicks corresponding to the fork type.

Guideline

Compression damping	
Comfort	18 clicks
Standard	15 clicks
Sport	12 clicks

Info
Turn clockwise to increase damping; turn counterclockwise to reduce damping during compression.

11.13 Adjusting the rebound damping of the fork

Info
The hydraulic rebound damping determines the fork suspension behavior.

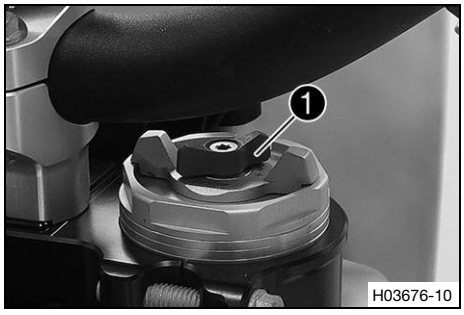

– Turn red adjuster ❶ clockwise as far as it will go.

Info
Adjuster ❶ is located at the upper end of the right fork leg.
The rebound damping is located in right fork leg **REB** (red adjuster). The compression damping is located in left fork leg **COMP** (white adjuster).

– Turn counterclockwise by the number of clicks corresponding to the fork type.

Guideline

Rebound damping	
Comfort	18 clicks
Standard	15 clicks
Sport	12 clicks

Info
Turn clockwise to increase the damping; turn counterclockwise to reduce damping when the shock absorber rebounds.

11.14 Adjusting the spring preload of the fork

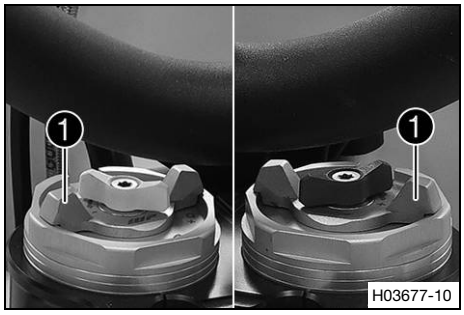

Preparatory work
– Raise the motorcycle with a lift stand. (p. 53)

Main work
– Turn T-grips ❶ counterclockwise all the way.
✓ Marking **+0** aligns with the right T-grip on both fork legs.

Info
Make the adjustment by hand only. Do not use a tool.
Make the same adjustment on both fork legs.

– Turn the T-grips clockwise.
Guideline

Spring preload – preload adjuster	
Comfort	**+0**
Standard	**+0**
Sport	**+3**

✓ The T-grips engage noticeably at the numerical values.

Info
Adjust the spring preload to the numerical values only as the preload will not engage between the numerical values.
Turn clockwise to increase the spring preload; turn counterclockwise to reduce the spring preload.
Adjusting the spring preload has no influence on the absorption setting of the rebound.
Basically, however, you should set the rebound damping higher with a higher spring preload.

Finishing work
– Remove the motorcycle from the lift stand. (p. 53)

11.15 Handlebar position

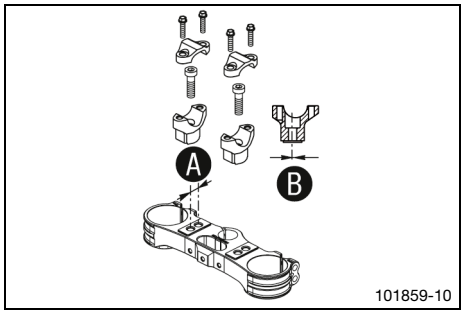

On the upper triple clamp, there are two holes at a distance of Ⓐ to each other.

Hole distance Ⓐ	15 mm (0.59 in)

The holes on the handlebar supports are placed at a distance of Ⓑ from the center.

Hole distance Ⓑ	3.5 mm (0.138 in)

The handlebar supports can be mounted in four different positions.

11.16 Adjusting the handlebar position

Warning
Danger of accidents A repaired handlebar poses a safety risk.

If the handlebar is bent or straightened, the material becomes fatigued. The handlebar may break as a result.

– Change the handlebar if the handlebar is damaged or bent.

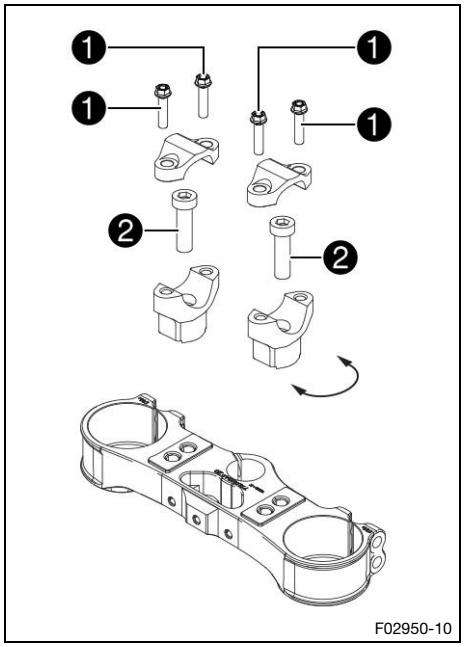

– Remove screws ❶. Take off the handlebar clamps. Take off the handlebar and lay it to one side.

Info
Cover the components to protect them against damage.
Do not bend the cables and lines.

– Remove screws ❷. Take off the handlebar supports.
– Place the handlebar supports in the required position. Mount and tighten screws ❷.

Guideline

Screw, handlebar holder	M10	40 Nm (29.5 lbf ft) **Loctite®243™**

Info
Position the left and right handlebar holders evenly.

– Position the handlebar.

Info
Make sure the cables and wiring are positioned correctly.

– Position the handlebar clamps. Mount and tighten screws ❶ evenly.

Guideline

Screw, handlebar clamp	M8	20 Nm (14.8 lbf ft)

Info
Make sure the gap width is even.

12.1 Raising the motorcycle with a lift stand

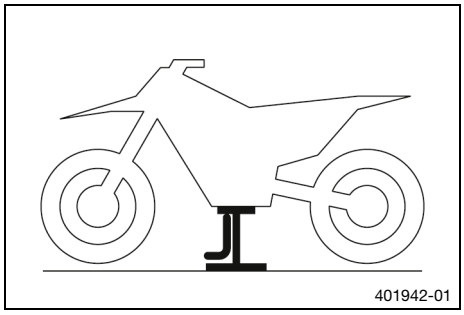
401942-01

Note

Danger of damage The parked vehicle can roll away or fall over.

– Park the vehicle on a firm and level surface.

– Raise the motorcycle at the frame underneath the engine.

Lift stand (81329955100)

✓ Neither wheel is in contact with the ground.

– Secure the motorcycle against falling over.

12.2 Removing the motorcycle from the lift stand

Note

Danger of damage The parked vehicle can roll away or fall over.

– Park the vehicle on a firm and level surface.

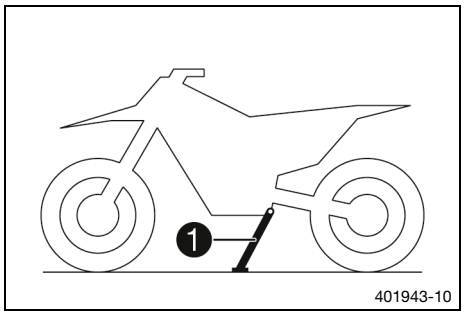

401943-10

– Remove the motorcycle from the lift stand.
– Remove the lift stand.
– To park the motorcycle, press side stand ❶ to the ground with your foot and lean the motorcycle on it.

Info

When you are riding, the side stand must be folded up and secured with rubber strap.

12.3 Bleeding the fork legs

Preparatory work

– Raise the motorcycle with a lift stand. (📖 p. 53)

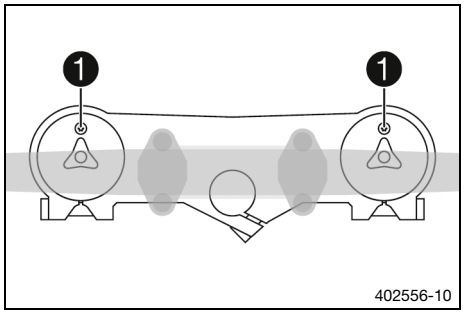

402556-10

Main work

– Release bleeder screws ❶.

✓ Any excess pressure escapes from the interior of the fork.

– Tighten the bleeder screws.

Finishing work

– Remove the motorcycle from the lift stand. (📖 p. 53)

12.4 Cleaning the dust boots of the fork legs

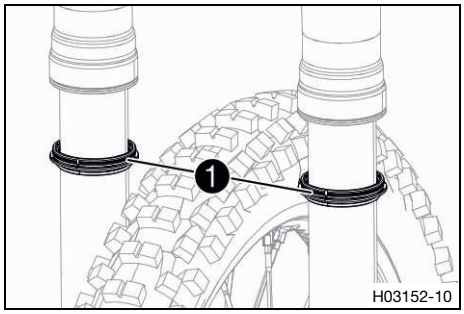

Preparatory work

– Raise the motorcycle with a lift stand. (📖 p. 53)
– Remove the fork protector. (📖 p. 54)

Main work

– Push dust boots ❶ of both fork legs downward.

Info

The dust boots remove dust and coarse dirt particles from the inside fork tubes. Over time, dirt can accumulate behind the dust boots. If this dirt is not removed, the oil seals behind can start to leak.

Warning

Danger of accidents Oil or grease on the brake discs reduces the braking effect.

– Always keep the brake discs free of oil and grease.
– Clean the brake discs with brake cleaner when necessary.

– Clean and oil the dust boots and inner fork tubes of both fork legs.

Universal oil spray (📖 p. 153)

– Press the dust boots back into their installation position.
– Remove excess oil.

Finishing work

– Install the fork protector. (📖 p. 55)
– Remove the motorcycle from the lift stand. (📖 p. 53)

12.5 Removing the fork protector

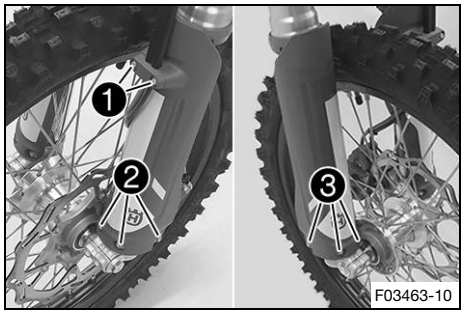

– Remove screws ❶ and take off the clamp.
– Remove screws ❷ on the left fork leg and take off the left fork protector.
– Remove screws ❸ on the right fork leg and take off the right fork protector.

12.6 Installing the fork protector

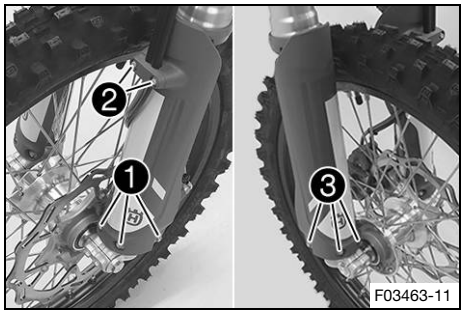

– Position the fork protector on the left fork leg. Mount and tighten screws ❶.

Guideline

Remaining screws, chassis	M6	10 Nm (7.4 lbf ft)

– Position the brake line, wiring harness, and clamp. Mount and tighten screws ❷.
– Position the fork protector on the right fork leg. Mount and tighten screws ❸.

Guideline

Remaining screws, chassis	M6	10 Nm (7.4 lbf ft)

12.7 Removing the fork legs

Preparatory work

– Remove the headlight mask with the headlight. (📖 p. 111)
– Raise the motorcycle with a lift stand. (📖 p. 53)
– Remove the front wheel. (📖 p. 98)

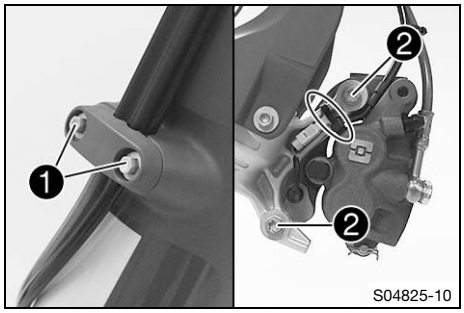

Main work

– Remove screws ❶ and take off the clamp.
– Remove the cable tie.
– Remove screws ❷ and take off the brake caliper.
– Allow the brake caliper and brake line to hang loosely to the side.

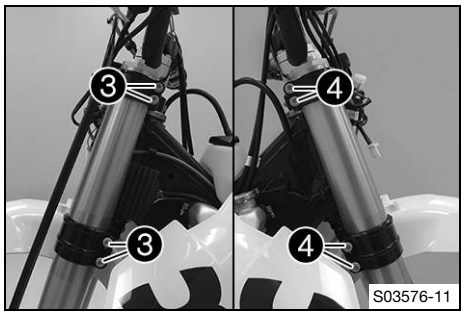

– Loosen screws ❸. Remove the left fork leg.
– Loosen screws ❹. Remove the right fork leg.

12.8 Installing the fork legs

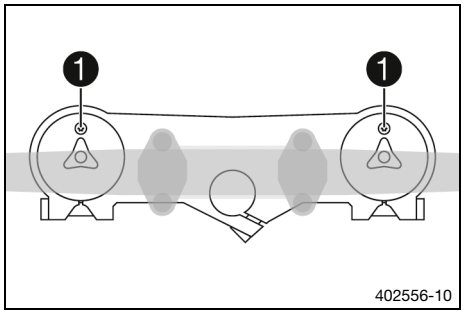

Main work

– Position the fork legs.

✓ Bleeder screws ❶ are positioned toward the front.

Info

The compression damping is located in left fork leg **COMP** (white adjuster). The rebound damping is located in right fork leg **REB** (red adjuster).

Grooves are milled into the side of the upper end of the fork legs. The second milled groove (from the top) must be flush with the upper edge of the upper triple clamp.

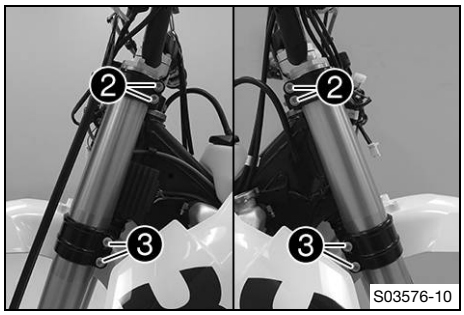

– Tighten screws ❷.

Guideline

Screw, top triple clamp	M8	17 Nm (12.5 lbf ft)

– Tighten screws ❸.

Guideline

Screw, bottom triple clamp	M8	15 Nm (11.1 lbf ft)

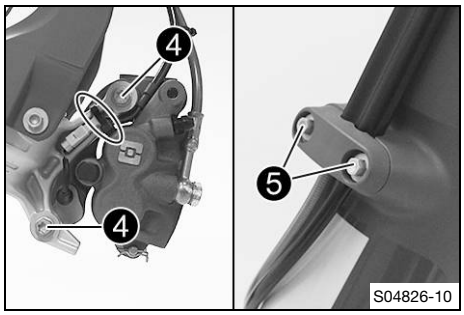

– Position the brake caliper, and mount and tighten screws ❹.

Guideline

Screw, front brake caliper	M8	25 Nm (18.4 lbf ft) **Loctite®243™**

– Mount the cable ties.

– Position the brake line, the wiring harness, and the clamp. Mount and tighten screws ❺.

Finishing work

– Install the front wheel. (p. 99)

– Install the headlight mask with the headlight. (p. 111)

– Check the headlight setting. (p. 114)

12.9 Removing the lower triple clamp

Preparatory work

– Remove the headlight mask with the headlight. (p. 111)

– Raise the motorcycle with a lift stand. (p. 53)

– Remove the front wheel. (p. 98)

– Remove the fork legs. (p. 55)

– Remove front fender. (p. 61)

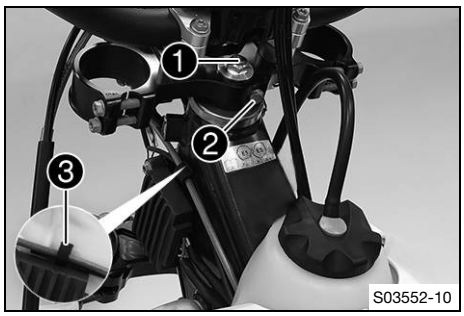

Main work

– Remove screw ❶.
– Remove screw ❷.
– Open cable holder ❸ in front of the left radiator and detach the clutch line.
– Take off the upper triple clamp with the handlebar and set aside.

Info
Protect the components against damage by covering them.
Do not kink the cables and lines.

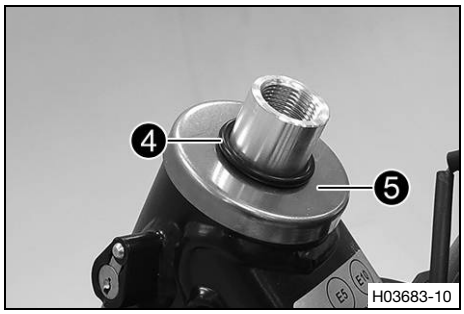

– Remove O-ring ❹ and protective ring ❺.
– Remove the lower triple clamp with the steering stem.
– Remove the upper steering head bearing.

12.10 Installing the lower triple clamp

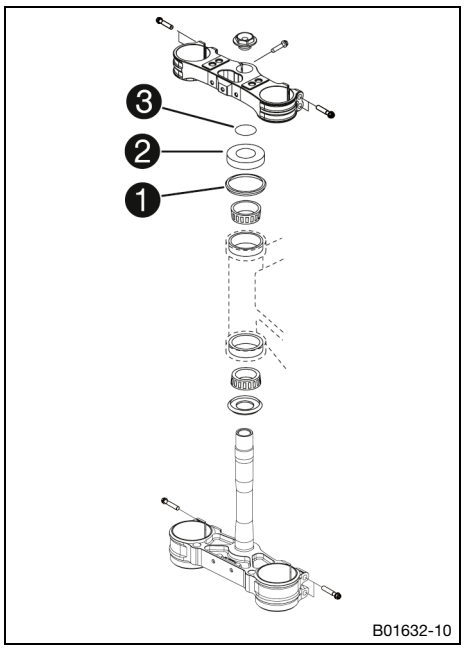

Main work

– Clean the bearing and sealing elements, check for damage, and grease.

High viscosity grease (p. 152)

– Position the lower triple clamp with the steering stem. Mount upper steering head bearing.
– Check whether upper steering head seal ❶ is correctly positioned.
– Mount protective ring ❷ and O-ring ❸.



– Position the upper triple clamp with the handlebar.
– Mount screw ❹, but do not tighten yet.
– Mount the clutch line with cable holder ❺.

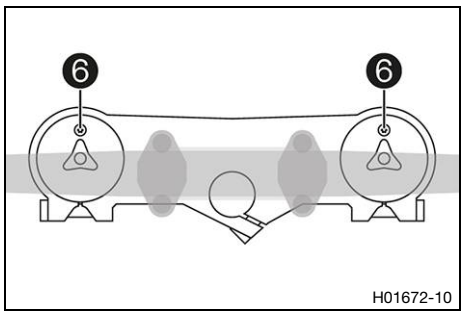

– Position the fork legs.

✔ Bleeder screws ❻ are positioned toward the front.

Info

The rebound damping is located in right fork leg **REB** (red adjuster). The compression damping is located in left fork leg **COMP** (white adjuster).

Grooves are milled into the side of the upper end of the fork legs. The second milled groove (from the top) must be flush with the upper edge of the upper triple clamp.

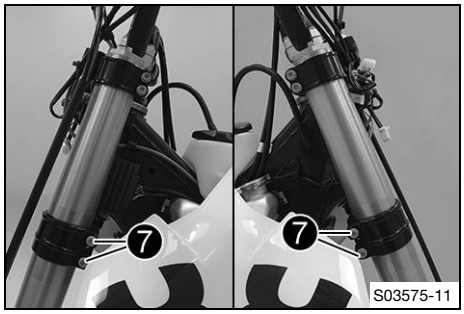

– Tighten screws ❼.

Guideline

Screw, bottom triple clamp	M8	15 Nm (11.1 lbf ft)

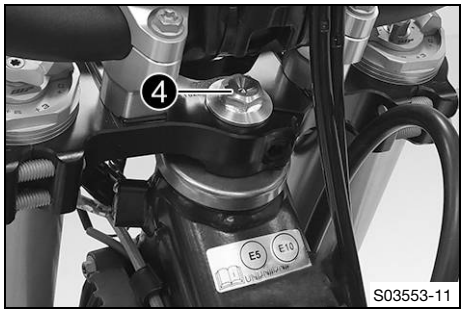

– Tighten screw ❹.

Guideline

Screw, top steering head	M20x1.5	12 Nm (8.9 lbf ft)

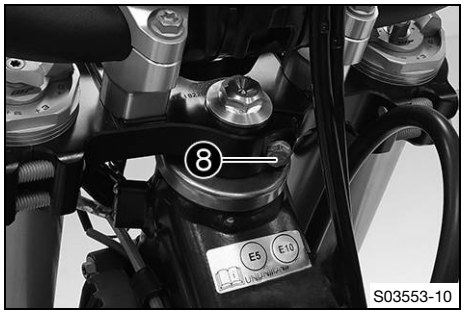

– Mount and tighten screw ❽.

Guideline

Screw, top steering stem	M8	17 Nm (12.5 lbf ft) **Loctite®243™**

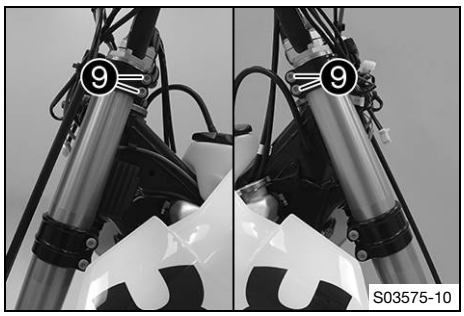

– Tighten screws ❾.

Guideline

Screw, top triple clamp	M8	17 Nm (12.5 lbf ft)

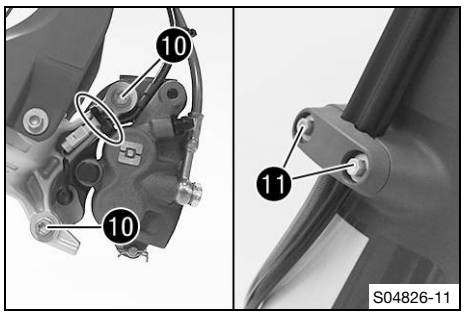

– Position the brake caliper, and mount and tighten screws ❿.

Guideline

Screw, front brake caliper	M8	25 Nm (18.4 lbf ft) **Loctite®243™**

– Mount the cable ties.
– Position the brake line, the wiring harness, and the clamp. Mount and tighten screws ⓫.

Finishing work

– Install front fender. (📖 p. 62)
– Install the front wheel. 🔧 (📖 p. 99)
– Install the headlight mask with the headlight. (📖 p. 111)
– Check that the wiring harness, throttle cables, and brake and clutch lines can move freely and are routed correctly.
– Check the steering head bearing for play. (📖 p. 59)
– Check the headlight setting. (📖 p. 114)
– Remove the motorcycle from the lift stand. (📖 p. 53)

12.11 Checking the steering head bearing play

Warning

Danger of accidents Incorrect steering head bearing play impairs the handling characteristic and damages components.

– Correct incorrect steering head bearing play immediately. (Your authorized Husqvarna Motorcycles workshop will be glad to help.)

Info

If the vehicle is operated for a lengthy period with play in the steering head bearing, the bearings and the bearing seats in the frame can become damaged over time.

Preparatory work

– Raise the motorcycle with a lift stand. (📖 p. 53)

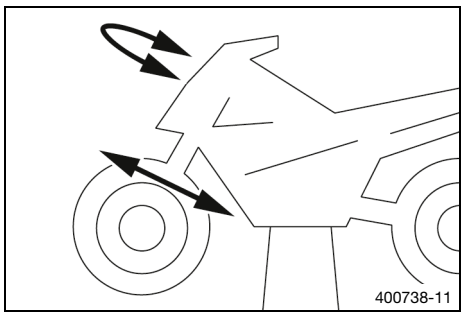

Main work

– Move the handlebar to the straight-ahead position. Move the fork legs to and fro in the direction of travel.

Play should not be detectable on the steering head bearing.

» If there is detectable play:

– Adjust the steering head bearing play. (p. 60)

– Move the handlebar to and fro over the entire steering range.

It must be possible to move the handlebar easily over the entire steering range. There should be no detectable detent positions.

» If detent positions are detected:

– Adjust the steering head bearing play. (p. 60)

– Check the steering head bearing and replace if necessary.

– Check the steering stop bolts for correct adjustment and locking.

Finishing work

– Remove the motorcycle from the lift stand. (p. 53)

12.12 Adjusting the steering head bearing play

Preparatory work

– Raise the motorcycle with a lift stand. (p. 53)

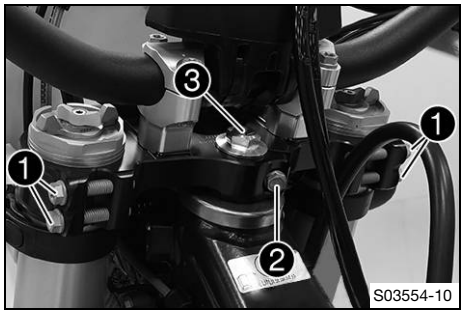

Main work

– Loosen screws ❶.

– Remove screw ❷.

– Loosen and retighten screw ❸.

Guideline

Screw, top steering head	M20x1.5	12 Nm (8.9 lbf ft)

– Using a plastic hammer, tap lightly on the upper triple clamp to avoid stresses.

– Tighten screws ❶.

Guideline

Screw, top triple clamp	M8	17 Nm (12.5 lbf ft)

– Mount and tighten screw ❷.

Guideline

Screw, top steering stem	M8	17 Nm (12.5 lbf ft) **Loctite®243™**

Finishing work

– Check the steering head bearing for play. (p. 59)

– Remove the motorcycle from the lift stand. (p. 53)

12.13 Lubricating the steering head bearing

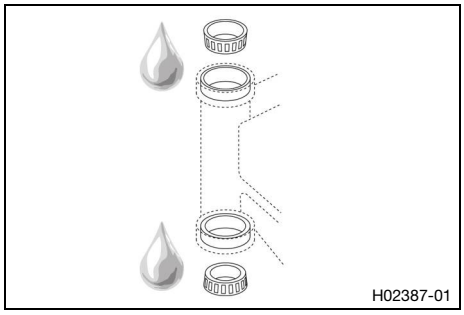

– Remove the lower triple clamp. (p. 56)
– Install the lower triple clamp. (p. 57)

Info
The steering head bearing is cleaned and lubricated in the course of removal and installation of the lower triple clamp.

12.14 Removing front fender

Preparatory work
– Remove the headlight mask with the headlight. (p. 111)

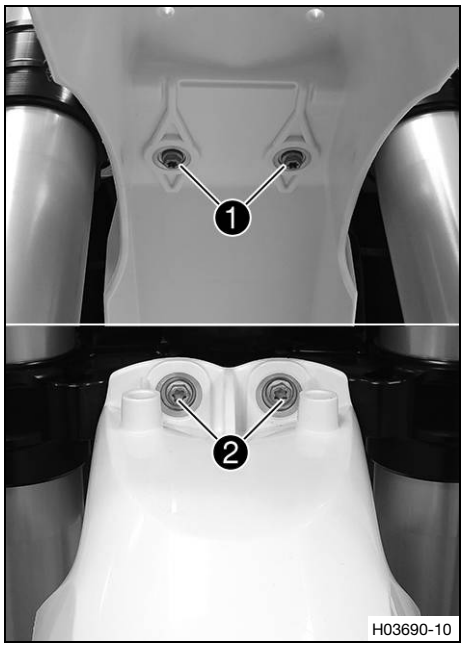

Main work
– Remove screws ❶.
– Remove screws ❷. Take off the front fender.

12.15 Installing front fender

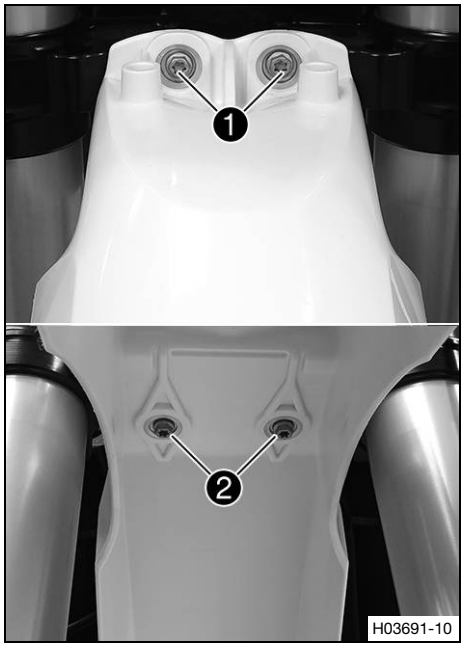

Main work

– Position front fender. Mount and tighten screws ❶.

Guideline

Remaining screws, chassis	M6	10 Nm (7.4 lbf ft)

– Mount and tighten screws ❷.

Guideline

Remaining screws, chassis	M6	10 Nm (7.4 lbf ft)

Finishing work

– Install the headlight mask with the headlight. (📖 p. 111)
– Check the headlight setting. (📖 p. 114)

12.16 Removing the shock absorber

Preparatory work

– Raise the motorcycle with a lift stand. (📖 p. 53)

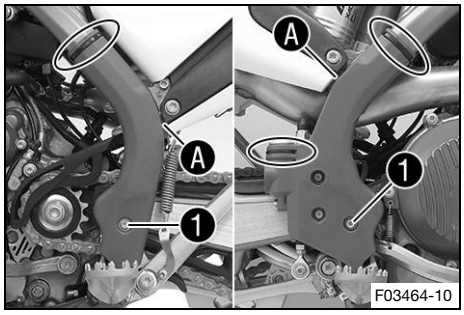

Main work

– Remove the cable ties.
– Remove screws ❶ with the washers.
– Detach the frame protector in area Ⓐ and take it off.

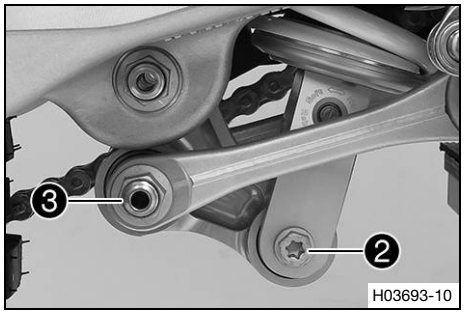

– Remove screw ❷.
– Remove fitting ❸.

Info
Raise the link fork slightly to be able to remove the screws more easily.

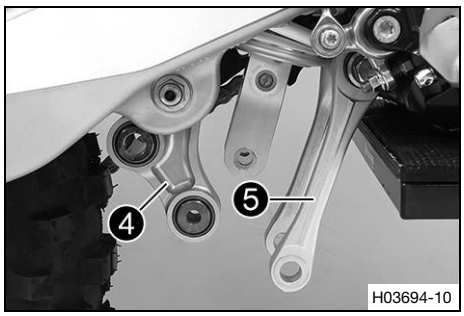

– Press angle lever ❹ toward the rear.
– Press linkage lever ❺ downward.



(EU)

– Disconnect the plug-in connector of the brake light switch.

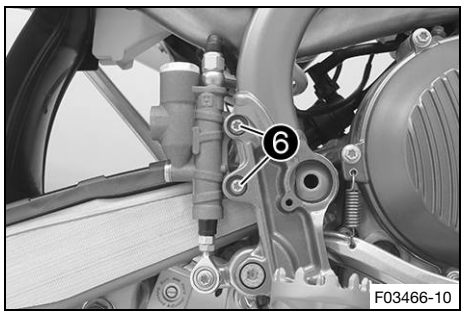

– Remove screws ❻.
– Pull off foot brake cylinder from the push rod.

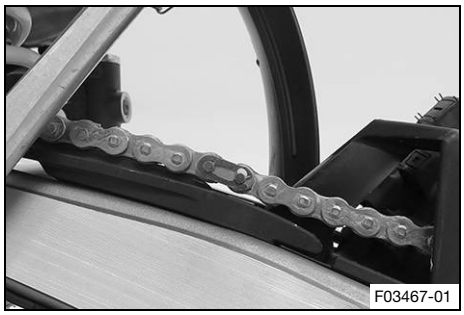

– Remove the connecting link of the chain.

Info
Cover the components to protect them against damage.

– Take off the chain.

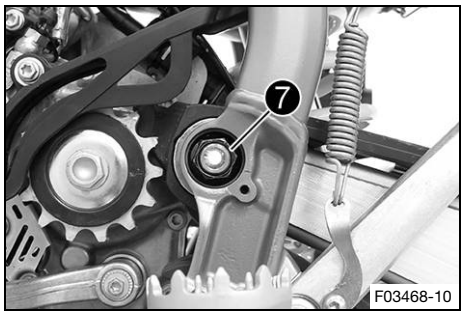

– Remove nut ❼ and pull out the swingarm pivot.
– Push the link fork back and secure it against falling over.



– Hold the shock absorber and remove screw ❽.
– Remove the shock absorber carefully at the bottom.

12.17 Installing the shock absorber



Main work

– Carefully position the shock absorber into the vehicle from the bottom.
– Mount and tighten screw ❶.

Guideline

Screw, top shock absorber	M10	60 Nm (44.3 lbf ft) **Loctite®2701™**

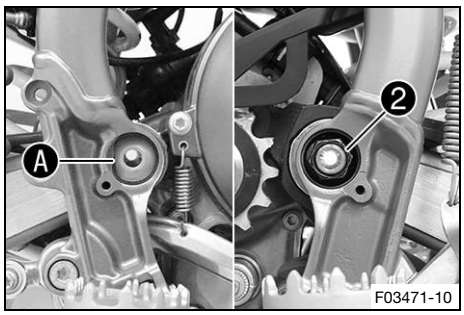

– Position the link fork and mount the swingarm pivot.

Info
Pay attention to flat area Ⓐ.

– Mount and tighten nut ❷.

Guideline

Nut, fork pivot	M16x1.5	100 Nm (73.8 lbf ft)

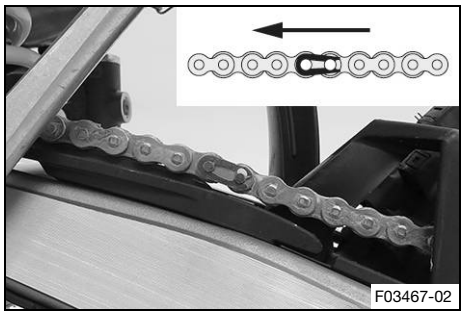

– Mount the chain.
– Connect the chain with the connecting link.

Guideline

The closed side of the chain joint lock must face in the direction of travel.

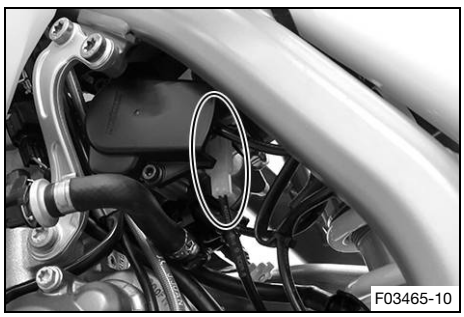

(EU)

– Join plug-in connector of the brake light switch.

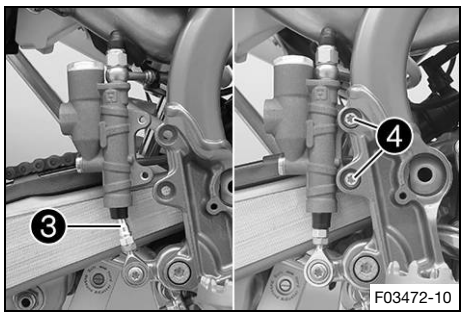

– Position the foot brake cylinder.
  ✓ Push rod ❸ engages in the foot brake cylinder.
  ✓ The dust boot is correctly positioned.
– Mount and tighten screws ❹.

  Guideline

Remaining screws, chassis	M6	10 Nm (7.4 lbf ft)

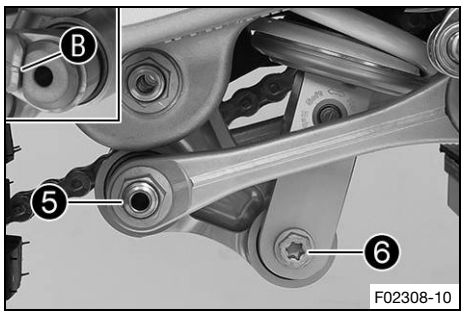

– Position the angle lever and linkage lever.
– Mount and tighten fitting ❺.

  Guideline

Nut, linkage lever on angle lever	M14x1.5	60 Nm (44.3 lbf ft)

Info
Pay attention to flat area Ⓑ.

– Mount and tighten screw ❻.

  Guideline

Screw, bottom shock absorber	M10	60 Nm (44.3 lbf ft) **Loctite®2701™**

Info
Raise the link fork slightly to be able to mount the screw more easily.

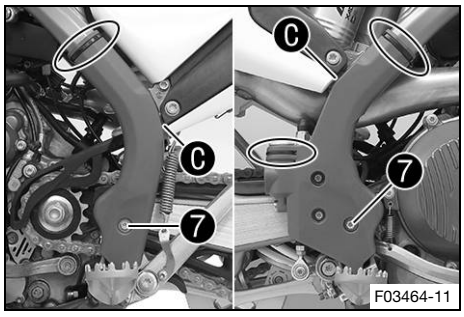

– Attach the frame protector in area Ⓒ and position it.
– Mount and tighten screws ❼ with washers.

  Guideline

Screw, frame protector	M5	3 Nm (2.2 lbf ft)

– Mount the new cable ties.

Finishing work
– Remove the motorcycle from the lift stand. (📖 p. 53)

12.18 Removing the seat

Preparatory work
– Remove the air filter box cover. (📖 p. 67)

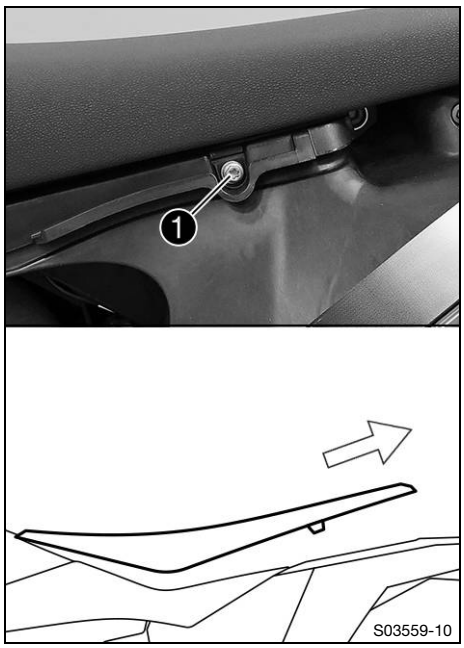

Main work

– Remove screw ❶ with the bushing.
– Pull seat back and lift it off.

12.19 Mounting the seat

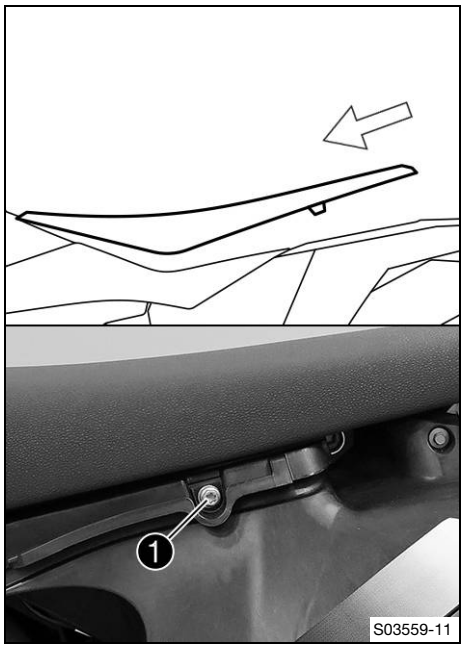

Main work

– Mount the front of the seat on the collar bushing of the fuel tank and the rear in the bracket.
– Push the seat forward.
– Make sure the seat is latched in place correctly.
– Mount and tighten screw ❶ and the bushing.

  Guideline

Screw, rear seat fixing	M6	10 Nm (7.4 lbf ft)

Finishing work

– Install the air filter box cover. (📖 p. 67)

12.20 Removing the air filter box cover

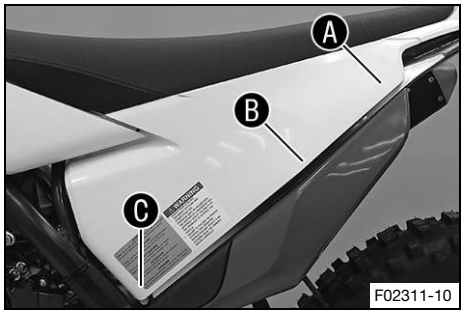

– Pull off the air filter box cover sideways in areas Ⓐ, Ⓑ and Ⓒ and take off toward the rear.

12.21 Installing the air filter box cover

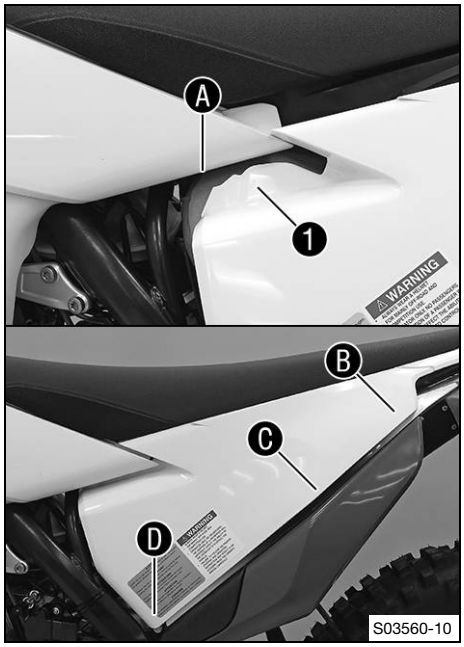

– Attach catch ❶ of the air filter box in area Ⓐ and push forward.
– Engage the air filter box cover in areas Ⓑ, Ⓒ and Ⓓ.

12.22 Removing the air filter

Note

Engine damage Unfiltered intake air has a negative effect on the service life of the engine.

Dust and dirt will enter the engine without an air filter.

– Only operate the vehicle if it is equipped with an air filter.

Note

Environmental hazard Hazardous substances cause environmental damage.

– Dispose of oils, grease, filters, fuel, cleaning agents, brake fluid, etc., correctly and in compliance with the applicable regulations.

Preparatory work

– Remove the air filter box cover. (📖 p. 67)

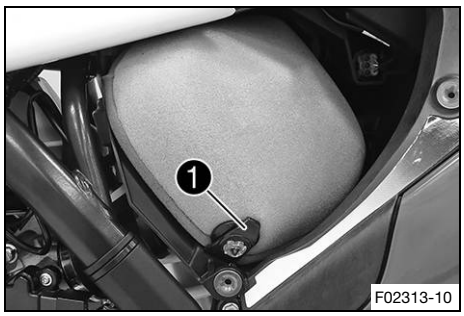

Main work

– Detach retaining tab ❶. Remove air filter with air filter support.
– Remove air filter from air filter support.

12.23 Installing the air filter

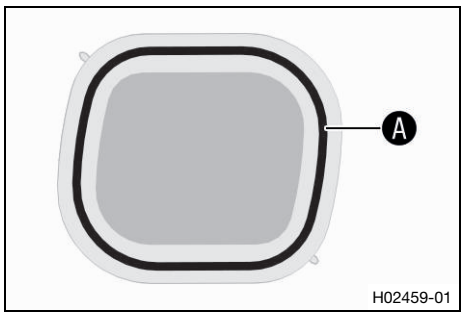

Main work

– Mount the clean air filter on the air filter support.
– Grease the air filter in area Ⓐ.

Long-life grease (📖 p. 152)

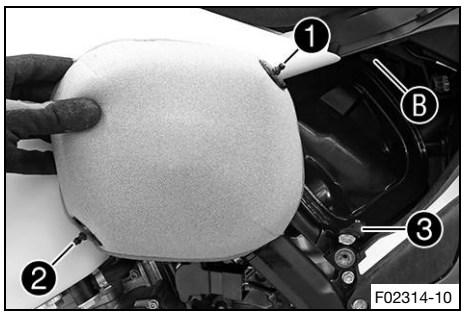

– Insert air filter and position retaining pin ❶ in bushing Ⓑ.
  ✔ The air filter is correctly positioned.
– Insert retaining tab ❸.
  ✔ Retaining pin ❷ is secured with retaining tab ❸.

Info
If the air filter is not mounted correctly, dust and dirt may enter the engine and result in damage.

Finishing work

– Install the air filter box cover. (📖 p. 67)

12.24 Cleaning the air filter and air filter box

Note
Environmental hazard Hazardous substances cause environmental damage.
– Dispose of oils, grease, filters, fuel, cleaning agents, brake fluid, etc., correctly and in compliance with the applicable regulations.

Info
Do not clean the air filter with fuel or petroleum since these substances attack the foam.

Preparatory work

– Remove the air filter box cover. (📖 p. 67)
– Remove the air filter. (📖 p. 67)



Main work

– Wash the air filter thoroughly in special cleaning liquid and allow it to dry properly.

Air filter cleaner (📖 p. 152)

Info
Only press the air filter to dry it, never wring it out.

– Oil the dry air filter with a high-grade air filter oil.

Oil for foam air filter (📖 p. 152)

– Clean the air filter box.
– Check the intake flange for damage and looseness.

Finishing work

– Install the air filter. 🔧 (📖 p. 68)
– Install the air filter box cover. (📖 p. 67)

12.25 Removing the right side cover

Preparatory work

– Remove the air filter box cover. (📖 p. 67)
– Remove the seat. (📖 p. 65)

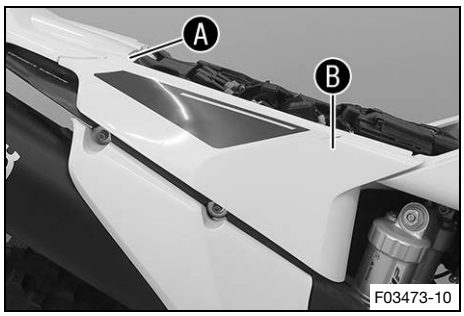

Main work

– Detach side cover in area Ⓐ, pull off sideways in area Ⓑ and take off toward the rear.

12.26 Installing the right side cover

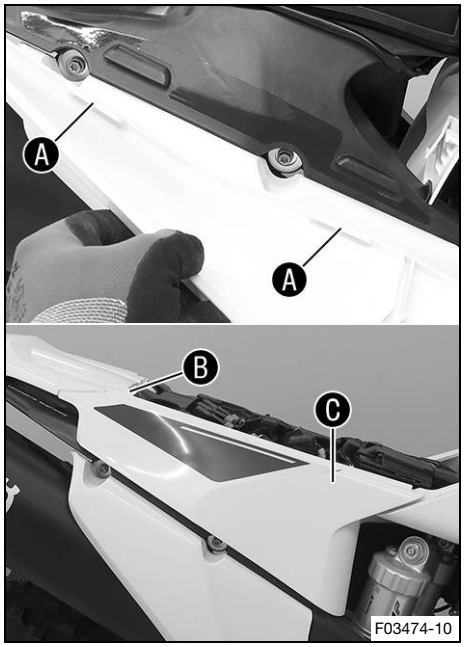

Main work

– Attach side cover with the holding lugs Ⓐ from below and push upward.
– Engage the side cover in areas Ⓑ and Ⓒ.

Finishing work

– Mount the seat. (📖 p. 66)
– Install the air filter box cover. (📖 p. 67)

12.27 Removing the main silencer

Warning

Danger of burns The exhaust system gets very hot when the vehicle is driven.

– Allow the exhaust system to cool down before performing any work on the vehicle.

Preparatory work

– Remove the air filter box cover. (📖 p. 67)
– Remove the seat. (📖 p. 65)
– Remove the right side cover. (📖 p. 69)

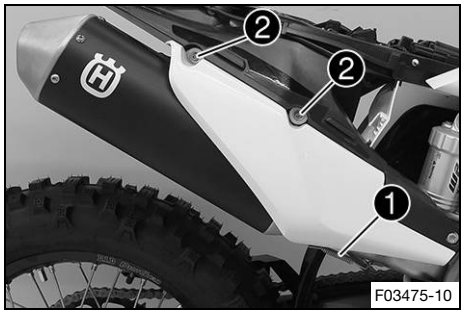

Main work

– Detach spring ❶.

Spring hook (50305017000C1)

(EU)

– Remove screws ❷ and take off the main silencer with the catalytic converter.

(CN)

– Remove screws ❷ and take off the main silencer.

12.28 Installing the main silencer

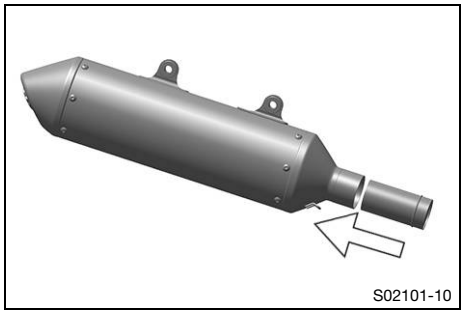

Main work

(EU)

– Position the catalytic converter in the main silencer.

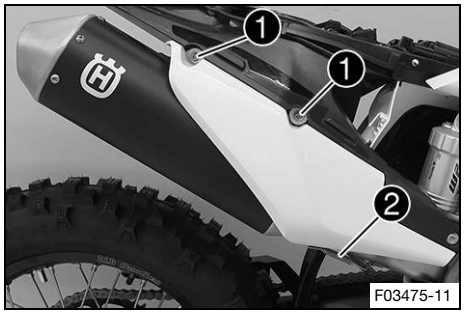

– Position the main silencer.
– Mount screws ❶, but do not tighten yet.
– Attach spring ❷.

Spring hook (50305017000C1)

– Tighten screws ❶.

Guideline

Remaining screws, chassis	M6	10 Nm (7.4 lbf ft)

Finishing work

– Install the right side cover. (📖 p. 70)
– Mount the seat. (📖 p. 66)
– Install the air filter box cover. (📖 p. 67)

12.29 Changing the glass fiber yarn filling in the main silencer

Warning

Danger of burns The exhaust system gets very hot when the vehicle is driven.

– Allow the exhaust system to cool down before performing any work on the vehicle.

Info

Over time, the fibers of the glass fiber yarn filling escape and the damper "burns" out.
Not only is the noise level higher, but the performance characteristics change.

Preparatory work

– Remove the air filter box cover. (📖 p. 67)
– Remove the seat. (📖 p. 65)
– Remove the right side cover. (📖 p. 69)
– Remove main silencer. (📖 p. 70)

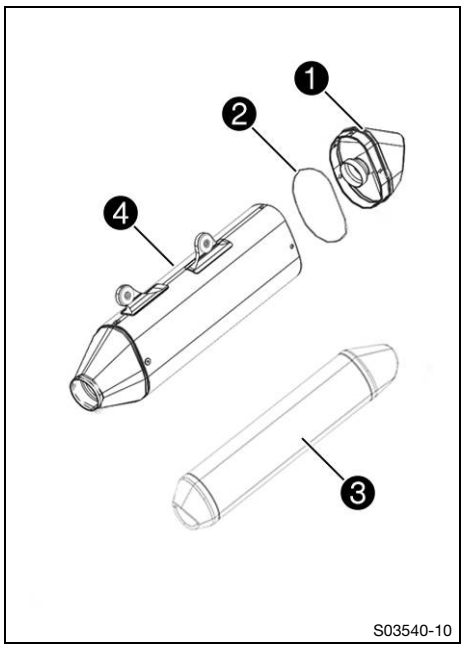

Main work

– Remove all the screws on the main silencer.
– Take off silencer cap ❶ with O-ring ❷.
– Remove glass fiber yarn filling ❸ from main silencer ❹.
– Clean the parts that need to be reinstalled and check for damage.
– Mount the new glass fiber yarn filling between the inner tube and the outer tube.
– Position the silencer cap with O-ring in the outer tube.
– Mount and tighten all of the screws.

Guideline

Screws on main silencer	M5	7 Nm (5.2 lbf ft)

Finishing work

– Install the main silencer. (📖 p. 71)
– Install the right side cover. (📖 p. 70)
– Mount the seat. (📖 p. 66)
– Install the air filter box cover. (📖 p. 67)

12.30 Removing the fuel tank

Danger

Fire hazard Fuel is highly flammable.

The fuel in the fuel tank expands when warm and can escape if overfilled.

– Do not fuel the vehicle in the vicinity of open flames or lit cigarettes.
– Switch off the engine for refueling.
– Make sure that no fuel is spilled; particularly not on hot parts of the vehicle.
– If any fuel is spilled, wipe it off immediately.
– Observe the specifications for refueling.

Warning

Danger of poisoning Fuel is poisonous and a health hazard.

– Avoid skin, eye and clothing contact with fuel.
– Immediately consult a doctor if you swallow fuel.
– Do not inhale fuel vapors.
– In case of skin contact, rinse the affected area with plenty of water.
– Rinse the eyes thoroughly with water, and consult a doctor in case of fuel contact with the eyes.
– Change your clothing in case of fuel spills on them.
– Keep fuels correctly in a suitable canister, and out of the reach of children.

Preparatory work

– Remove the air filter box cover. (📖 p. 67)

– Remove the seat. (p. 65)
– Remove the right side cover. (p. 69)

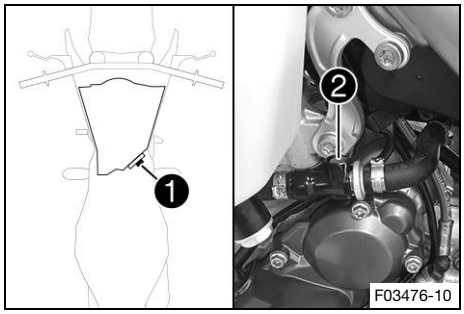

Main work

– Unplug connector ❶ of the fuel pump.
– Clean quick release coupling ❷ thoroughly with compressed air.

Info
Under no circumstances should dirt enter into the fuel line. Dirt in the fuel line clogs the injection valve!

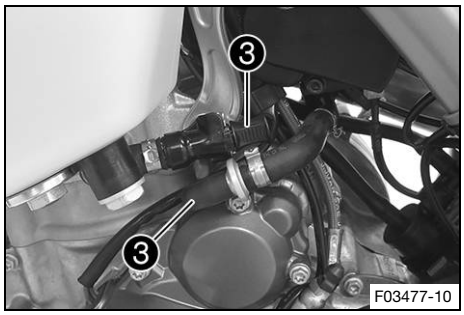

– Disconnect the quick release coupling.

Info
Remaining fuel may flow out of the fuel hose.

– Mount wash cap set ❸.

Wash cap set (81212016100)

– Pull the fuel tank breather hose off the fuel tank lid.

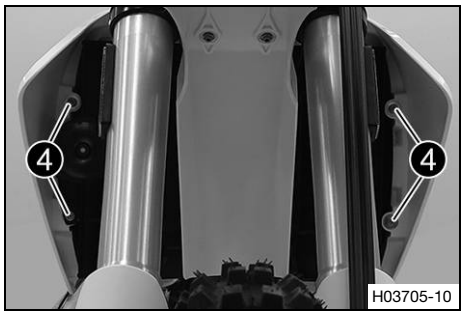

– Remove screws ❹.

(EU)

– Hang the horn and horn bracket to one side.

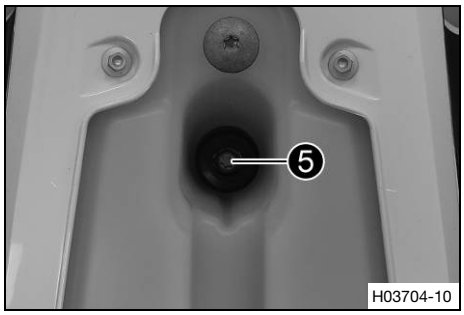

– Remove screw ❺ with the rubber bushing.

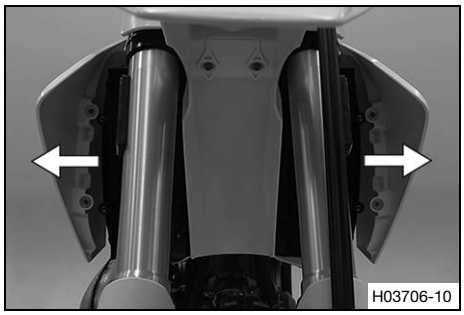

– Pull both spoilers laterally off the radiator and lift off the fuel tank.

12.31 Installing the fuel tank

Danger

Fire hazard Fuel is highly flammable.

The fuel in the fuel tank expands when warm and can escape if overfilled.

- Do not fuel the vehicle in the vicinity of open flames or lit cigarettes.
- Switch off the engine for refueling.
- Make sure that no fuel is spilled; particularly not on hot parts of the vehicle.
- If any fuel is spilled, wipe it off immediately.
- Observe the specifications for refueling.

Warning

Danger of poisoning Fuel is poisonous and a health hazard.

- Avoid skin, eye and clothing contact with fuel.
- Immediately consult a doctor if you swallow fuel.
- Do not inhale fuel vapors.
- In case of skin contact, rinse the affected area with plenty of water.
- Rinse the eyes thoroughly with water, and consult a doctor in case of fuel contact with the eyes.
- Change your clothing in case of fuel spills on them.

Main work

- Check the throttle cable routing. (p. 81)

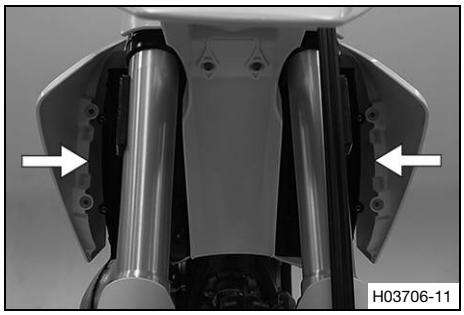

- Position the fuel tank and fit the two spoilers to the sides in front of the radiator bracket.
- Make sure that no cables or throttle cables are trapped or damaged.

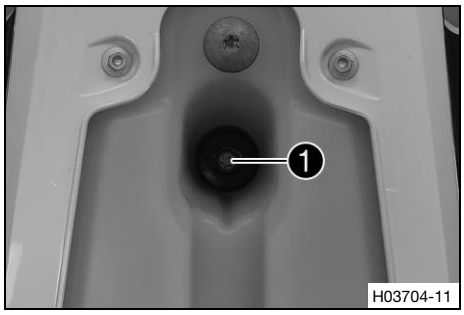

- Attach the fuel tank breather hose.
- Mount and tighten screw 1 with the rubber bushing.

  Guideline

Remaining screws, chassis	M6	10 Nm (7.4 lbf ft)

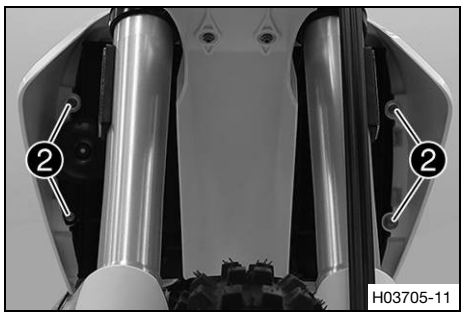

(EU)

– Position the horn with the horn bracket.

– Mount and tighten screws ❷.

Guideline

Remaining screws, chassis	M6	10 Nm (7.4 lbf ft)

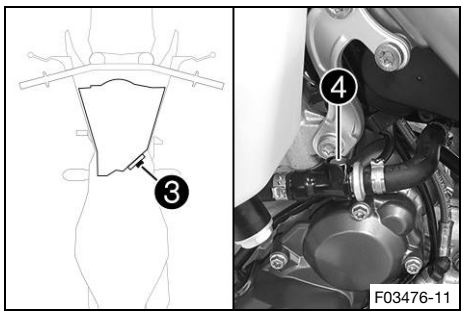

– Plug in connector ❸ for the fuel pump.

– Remove the wash cap set.

– Clean the quick release coupling thoroughly with compressed air.

Info
Under no circumstances should dirt enter into the fuel line. Dirt in the fuel line clogs the injection valve!

– Spray silicone spray onto a lint-free cleaning cloth and lightly lubricate the O-ring of the quick-release coupling.

Silicone spray (📖 p. 152)

– Join quick release coupling ❹.

Info
Route the cable and fuel line at a safe distance from the exhaust system.

Finishing work

– Install the right side cover. (📖 p. 70)

– Mount the seat. (📖 p. 66)

– Install the air filter box cover. (📖 p. 67)

12.32 Checking for chain dirt accumulation

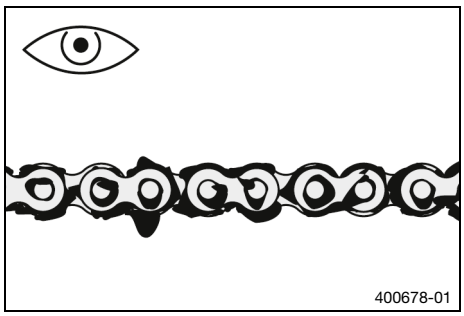

– Check the chain for coarse dirt accumulation.

» If the chain is very dirty:

– Clean the chain. (📖 p. 76)

12.33 Cleaning the chain

Warning
Danger of accidents Lubricants on the tires reduces the road grip.
– Remove lubricants from the tires using a suitable cleaning agent.

Warning
Danger of accidents Oil or grease on the brake discs reduces the braking effect.
– Always keep the brake discs free of oil and grease.
– Clean the brake discs with brake cleaner when necessary.

Note
Environmental hazard Hazardous substances cause environmental damage.
– Dispose of oils, grease, filters, fuel, cleaning agents, brake fluid, etc., correctly and in compliance with the applicable regulations.

Info
The service life of the chain depends largely on its maintenance.

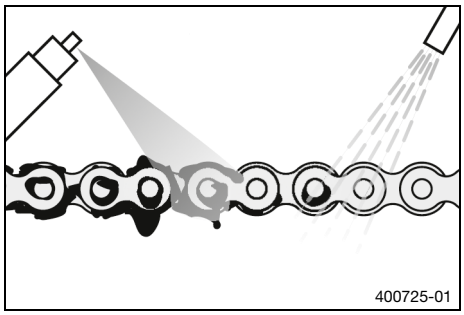
400725-01

Preparatory work
– Raise the motorcycle with a lift stand. (p. 53)

Main work
– Rinse off loose dirt with a soft jet of water.
– Remove old grease residue with chain cleaner.

Chain cleaner (p. 152)

– After drying, apply chain spray.

Off-road chain spray (p. 152)

Finishing work
– Remove the motorcycle from the lift stand. (p. 53)

12.34 Checking the chain tension

Warning
Danger of accidents Incorrect chain tension damages components and results in accidents.

If the chain is tensioned too much, the chain, engine sprocket, rear sprocket, transmission and rear wheel bearings wear more quickly. Some components may break if overloaded.

If the chain is too loose, the chain may fall off the engine sprocket or the rear sprocket. As a result, the rear wheel locks or the engine will be damaged.

– Check the chain tension regularly.
– Set the chain tension in accordance with the specification.

Preparatory work
– Raise the motorcycle with a lift stand. (p. 53)

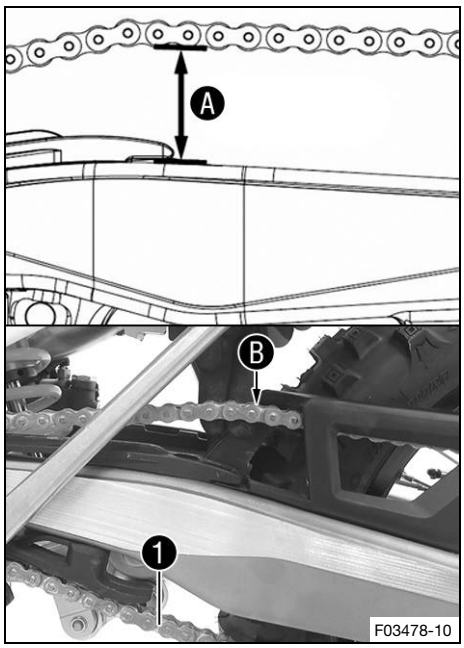

Main work

– Pull the chain at the end of the chain sliding piece upward to measure chain tension Ⓐ.

Info

Lower chain section ❶ must be taut.

When the chain guard is mounted, it must be possible to pull up the chain at least to the point where it makes contact with chain guard Ⓑ.

Chain wear is not always even, so you should repeat this measurement at different chain positions.

Chain tension	55 … 58 mm (2.17 … 2.28 in)

» If the chain tension does not meet the specification:

– Adjust the chain tension. (📖 p. 77)

Finishing work

– Remove the motorcycle from the lift stand. (📖 p. 53)

12.35 Adjusting the chain tension

Warning

Danger of accidents Incorrect chain tension damages components and results in accidents.

If the chain is tensioned too much, the chain, engine sprocket, rear sprocket, transmission and rear wheel bearings wear more quickly. Some components may break if overloaded.

If the chain is too loose, the chain may fall off the engine sprocket or the rear sprocket. As a result, the rear wheel locks or the engine will be damaged.

– Check the chain tension regularly.
– Set the chain tension in accordance with the specification.

Preparatory work

– Raise the motorcycle with a lift stand. (📖 p. 53)
– Check the chain tension. (📖 p. 76)

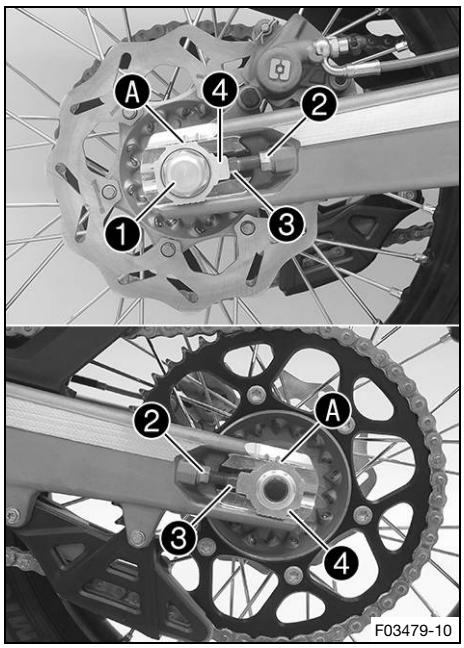

Main work

– Loosen nut ❶.
– Loosen nuts ❷.
– Adjust the chain tension by turning adjusting screws ❸ left and right.

Guideline

Chain tension	55 … 58 mm (2.17 … 2.28 in)
Turn adjusting screws ❸ on the left and right so that the markings on the left and right chain adjusters are in the same position relative to reference marks Ⓐ. The rear wheel is then correctly aligned.	

– Tighten nuts ❷.
– Make sure that chain adjusters ❹ are fitted correctly on adjusting screws ❸.
– Tighten nut ❶.

Guideline

Nut, rear wheel spindle	M20x1.5	80 Nm (59 lbf ft)

Info
The wide adjustment range of the chain adjusters (32 mm (1.26 in)) enables different secondary ratios with the same chain length.
Chain adjusters ❹ can be turned by 180°.

Finishing work

– Remove the motorcycle from the lift stand. (📖 p. 53)

12.36 Checking the chain, rear sprocket, engine sprocket, and chain guide

Preparatory work

– Raise the motorcycle with a lift stand. (📖 p. 53)

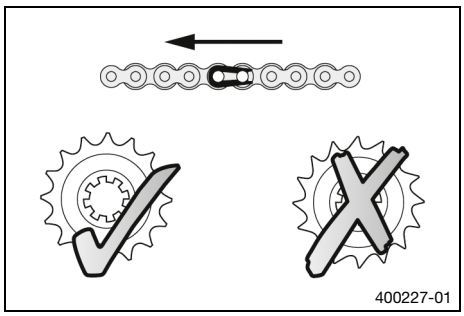

Main work

– Shift the transmission into neutral.
– Check the chain, rear sprocket and engine sprocket for wear.
  » If the chain, rear sprocket or engine sprocket is worn:
    – Change the drivetrain kit. 🔧

Info
The engine sprocket, rear sprocket and chain should always be replaced together.

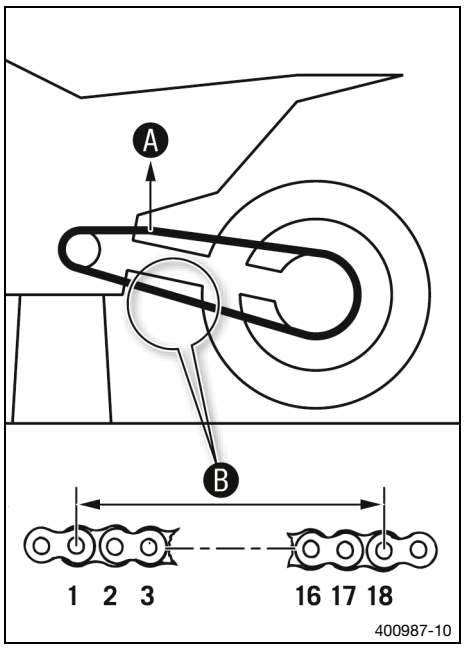

– Pull on the top section of the chain with the specified weight Ⓐ.

Guideline

Weight of chain wear measurement	10 … 15 kg (22 … 33 lb.)

– Measure distance Ⓑ of 18 chain rollers in the lower chain section.

Info
Chain wear is not always even, so you should repeat this measurement at different chain positions.

Maximum distance Ⓑ from 18 chain rollers at the longest chain section	272 mm (10.71 in)

» If distance Ⓑ is greater than the specified measurement:

– Change the drivetrain kit.

Info
When a new chain is mounted, the rear sprocket and engine sprocket should also be changed.
New chains wear out faster on old, worn sprockets.

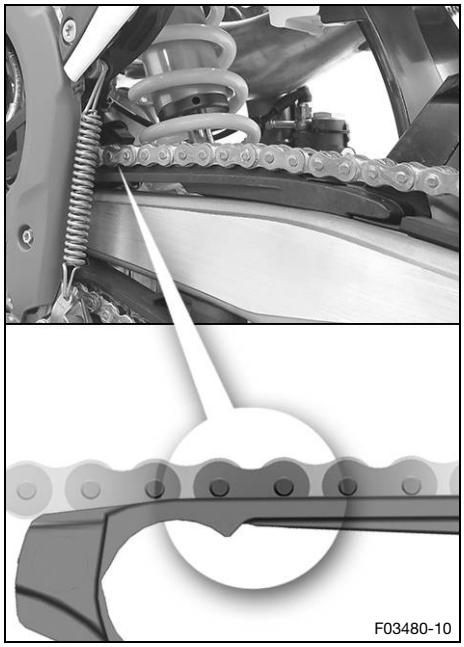

– Check the chain sliding guard for wear.

» If the lower edge of the chain pins is in line with, or below, the chain sliding guard:

– Change the chain sliding guard.

– Check that the chain sliding guard is firmly seated.

» If the chain sliding guard is loose:

– Tighten the screws on the chain sliding guard.

Guideline

Screw, chain sliding guard	M6	10 Nm (7.4 lbf ft) **Loctite®243™**

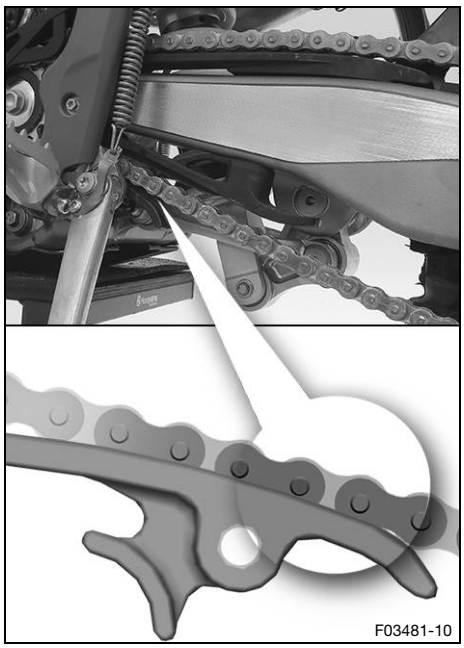

– Check the chain sliding piece for wear.
  » If the lower edge of the chain pins is in line with or below the chain sliding piece:
    – Change the chain sliding piece.
– Check that the chain sliding piece is firmly seated.
  » If the chain sliding piece is loose:
    – Tighten the screw of the chain sliding piece.

    Guideline

Screw, chain sliding piece	M8	15 Nm (11.1 lbf ft)

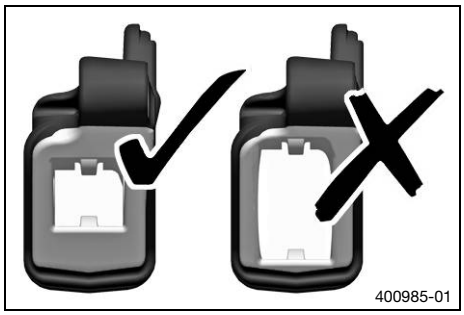

– Check the chain guide for wear.

Info
Wear can be seen on the front of the chain guide.

  » If the light part of the chain guide is worn:
    – Change the chain guide.

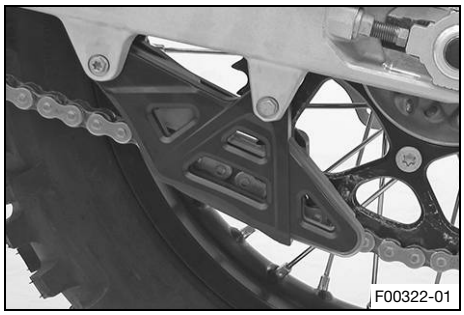

– Check that the chain guide is firmly seated.
  » If the chain guide is loose:
    – Tighten the fitting on the chain guide.

    Guideline

Remaining screws, chassis	M6	10 Nm (7.4 lbf ft)
Remaining nuts, chassis	M6	10 Nm (7.4 lbf ft)

Finishing work
– Remove the motorcycle from the lift stand. (p. 53)

12.37 Checking the frame

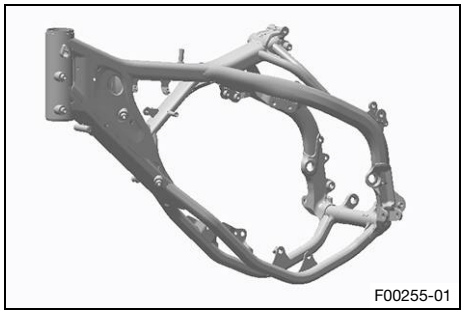
F00255-01

– Check the frame for damage, cracking, and deformation.
  » If the frame shows signs of damage, cracking, or deformation:
    – Change the frame.

    Guideline

Repairs on the frame are not permitted.

12.38 Checking the link fork

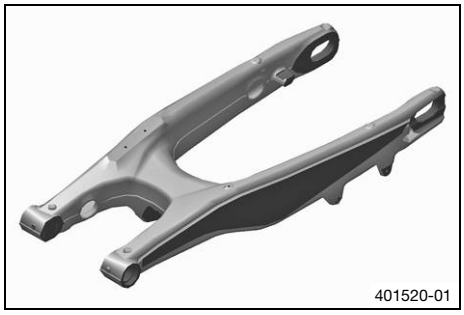
401520-01

– Check the link fork for damage, cracking, and deformation.
  » If the link fork exhibits damage, cracking, or deformation:
    – Change the link fork.

Info
Always replace a damaged link fork. Repair of the link fork is not authorized by Husqvarna Motorcycles.

12.39 Checking the throttle cable routing

Warning
Danger of accidents The throttle cable can become kinked, trapped or blocked if it is not routed correctly.

If the throttle cable is kinked, trapped or blocked, the speed can no longer be controlled.

– Make sure that the throttle cable routing and the play in throttle cable complies with the specification.

Preparatory work
– Remove the air filter box cover. (p. 67)
– Remove the seat. (p. 65)
– Remove the right side cover. (p. 69)
– Remove the fuel tank. (p. 72)



Main work

– Check the throttle cable routing.

Both throttle cables must be routed, side by side, on the back of the handlebars and above the fuel tank bracket, to the throttle valve body. Both throttle cables must be secured behind the rubber strap of the fuel tank support.

» If the throttle cable is not routed as specified:

– Correct the throttle cable routing.

Finishing work

– Install the fuel tank. (p. 74)
– Install the right side cover. (p. 70)
– Mount the seat. (p. 66)
– Install the air filter box cover. (p. 67)

12.40 Checking the rubber grip

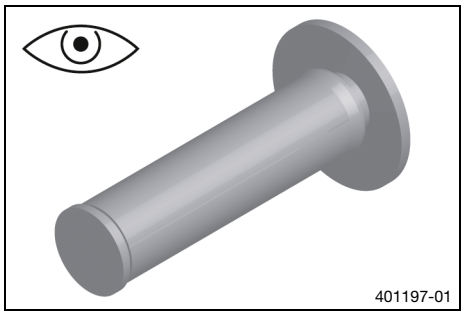

– Check the rubber grips on the handlebar for damage, wear, and looseness.

Info

The rubber grips are vulcanized onto a sleeve on the left and onto the handle tube of the throttle grip on the right. The left sleeve is clamped onto the handlebar. The rubber grip can only be replaced with the sleeve or the throttle tube.

» If a rubber grip is damaged, worn, or loose:

– Change the rubber grip.

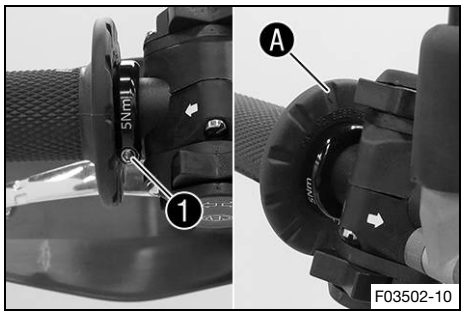

(EU)

– Check that screw 1 is firmly seated.

Guideline

Screw, fixed grip	M4	5 Nm (3.7 lbf ft) **Loctite®243™**

Diamond A must be positioned visibly as shown in the figure.

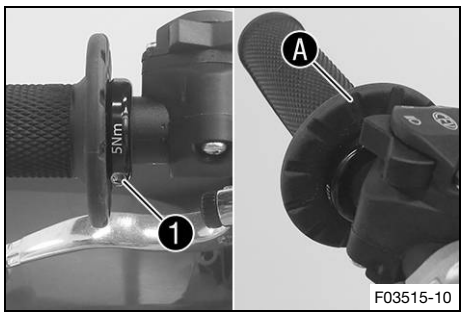

(CN)

– Check that screw ❶ is firmly seated.

Guideline

Screw, fixed grip	M4	5 Nm (3.7 lbf ft) **Loctite®243™**

Diamond Ⓐ must be positioned visibly as shown in the figure.

12.41 Adjusting the basic position of the clutch lever

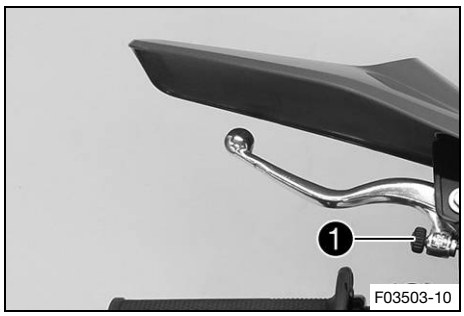

– Adjust the basic position of the clutch lever to your hand size by turning adjusting screw ❶.

Info

Turn the adjusting screw clockwise to increase the distance between the clutch lever and the handlebar.

Turn the adjusting screw counterclockwise to decrease the distance between the clutch lever and the handlebar.

The range of adjustment is limited.

Turn the adjusting screw by hand only, and do not apply any force.

Do not make any adjustments while riding.

12.42 Checking/correcting the fluid level of hydraulic clutch

Warning

Skin irritation Brake fluid causes skin irritation.

– Keep brake fluid out of the reach of children.
– Wear suitable protective clothing and safety glasses.
– Do not allow brake fluid to come into contact with the skin, the eyes or clothing.
– Consult a doctor immediately if brake fluid has been swallowed.
– Rinse the affected area with plenty of water in the event of contact with the skin.
– Rinse eyes thoroughly with water immediately and consult a doctor if brake fluid comes into contact with the eyes.
– If brake fluid spills on to your clothing, change the clothing.

Note

Environmental hazard Hazardous substances cause environmental damage.

– Dispose of oils, grease, filters, fuel, cleaning agents, brake fluid, etc., correctly and in compliance with the applicable regulations.

Info

The fluid level rises with increasing wear of the clutch facing discs.

Never use DOT 5 brake fluid. It is silicone-based and purple in color. Oil seals and clutch lines are not designed for DOT 5 brake fluid.

Avoid contact between brake fluid and painted parts. Brake fluid corrodes paint.

Only use clean brake fluid from a sealed container.

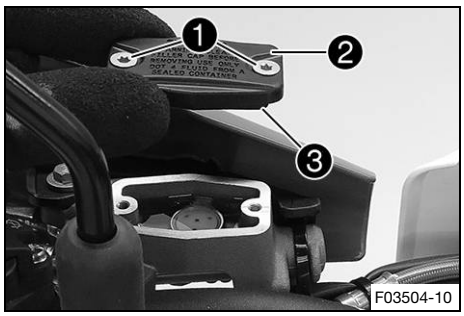

– Move the hydraulic clutch fluid reservoir mounted on the handlebar into a horizontal position.
– Remove screws ❶.
– Take off cover ❷ with membrane ❸.
– Check the fluid level.

Fluid level below container rim	4 mm (0.16 in)

» If the fluid level does not meet specifications:
– Correct the fluid level of the hydraulic clutch.

Brake fluid DOT 4 / DOT 5.1 (📖 p. 150)

– Position the cover with the membrane. Mount and tighten the screws.

Info
Use water to immediately clean up any brake fluid that has overflowed or spilled.

12.43 Changing the hydraulic clutch fluid

Warning
Skin irritation Brake fluid causes skin irritation.
– Keep brake fluid out of the reach of children.
– Wear suitable protective clothing and safety glasses.
– Do not allow brake fluid to come into contact with the skin, the eyes or clothing.
– Consult a doctor immediately if brake fluid has been swallowed.
– Rinse the affected area with plenty of water in the event of contact with the skin.
– Rinse eyes thoroughly with water immediately and consult a doctor if brake fluid comes into contact with the eyes.
– If brake fluid spills on to your clothing, change the clothing.

Note
Environmental hazard Hazardous substances cause environmental damage.
– Dispose of oils, grease, filters, fuel, cleaning agents, brake fluid, etc., correctly and in compliance with the applicable regulations.

Info
Never use DOT 5 brake fluid. It is silicone-based and purple in color. Oil seals and clutch lines are not designed for DOT 5 brake fluid.
Avoid contact between brake fluid and painted parts. Brake fluid corrodes paint.
Only use clean brake fluid from a sealed container.

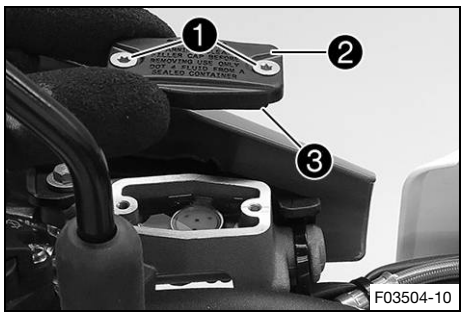

– Move the hydraulic clutch fluid reservoir mounted on the handlebar into a horizontal position.
– Remove screws ❶.
– Take off cover ❷ with membrane ❸.

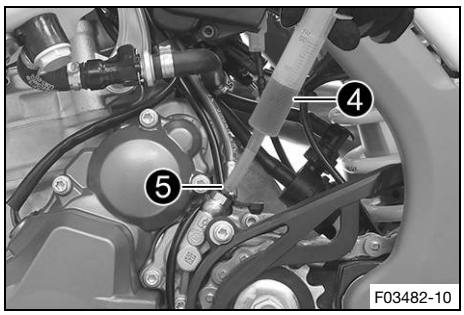

– Fill bleeding syringe ❹ with the appropriate hydraulic fluid.

Syringe (50329050000)
Brake fluid DOT 4 / DOT 5.1 (📖 p. 150)

– On the clutch slave cylinder, remove the protection cap, remove bleeder screw ❺ and mount bleeding syringe ❹.

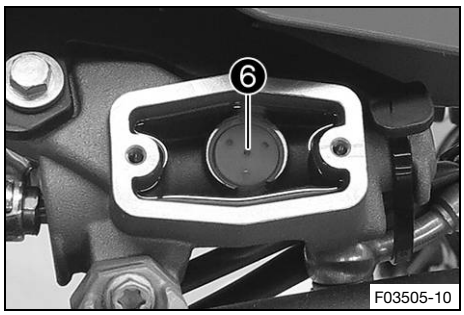

– Now inject fluid into the system until it escapes from the openings ❻ of the master cylinder without bubbles.
– Occasionally extract the fluid from the master cylinder reservoir to prevent overflowing.
– Remove the bleeding syringe. Mount and tighten the bleeder screw. Mount the protection cap.
– Correct the fluid level of the hydraulic clutch.

  Guideline

Fluid level below container rim	4 mm (0.16 in)

– Position the cover with the membrane. Mount and tighten the screws.

Info
Use water to immediately clean up any brake fluid that has overflowed or spilled.

12.44 Removing the engine guard

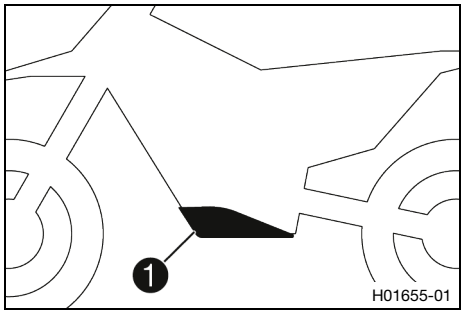

– Remove screws ❶ and engine guard.

12.45 Installing the engine guard

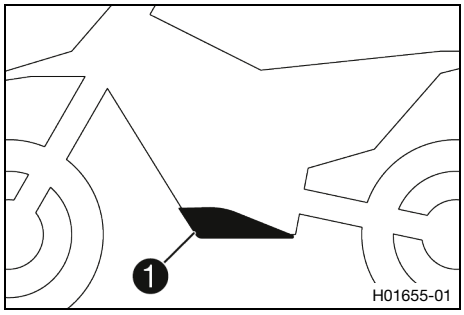

– Attach the engine guard on the frame at the rear and swing up at the front.
– Mount and tighten screws 1.

Guideline

Remaining screws, chassis	M6	10 Nm (7.4 lbf ft)

13.1 Adjusting the basic position of the hand brake lever

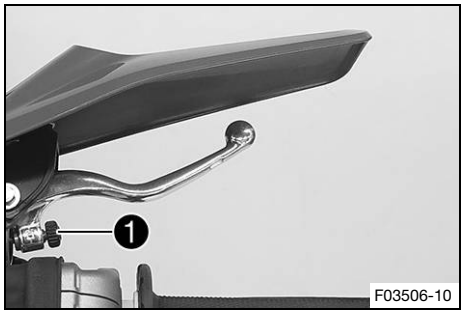

– Adjust basic position of the hand brake lever to your hand size by turning adjusting screw ❶.

Info

Turn the adjusting screw clockwise to increase the distance between the hand brake lever and the handlebar.

Turn the adjusting screw counterclockwise to decrease the distance between the hand brake lever and the handlebar.

The range of adjustment is limited.

Turn the adjusting screw by hand only, and do not apply any force.

Do not make any adjustments while riding.

13.2 Checking the brake discs

Warning

Danger of accidents Worn-out brake discs reduce the braking effect.

– Make sure that worn-out brake discs are replaced immediately. (Your authorized Husqvarna Motorcycles workshop will be glad to help.)

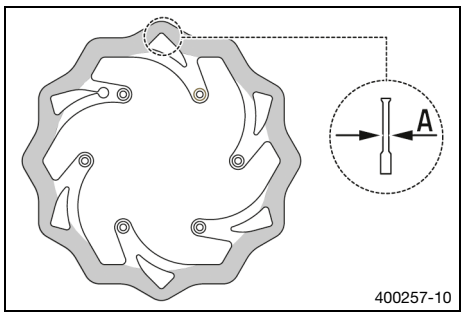

– Check the front and rear brake disc thickness at multiple points for the dimension Ⓐ.

Info

Wear reduces the thickness of the brake disc around the contact surface of the brake linings.

Brake discs - wear limit	
front	2.5 mm (0.098 in)
rear	3.5 mm (0.138 in)

» If the brake disc thickness is less than the specified value:
  – Change the front brake disc.
  – Change the rear brake disc.

– Check the front and rear brake discs for damage, cracking, and deformation.

» If the brake disc exhibits damage, cracking, or deformation:
  – Change the front brake disc.
  – Change the rear brake disc.

13.3 Checking the front brake fluid level

Warning
Danger of accidents An insufficient brake fluid level will cause the brake system to fail.

If the brake fluid level drops below the **MIN** marking, the brake system is leaking or the brake linings are worn down.

– Check the brake system and do not continue riding until the problem is eliminated. (Your authorized Husqvarna Motorcycles workshop will be glad to help.)

Warning
Danger of accidents Old brake fluid reduces the braking effect.

– Make sure that brake fluid for the front and rear brake is changed in accordance with the service schedule. (Your authorized Husqvarna Motorcycles workshop will be glad to help.)

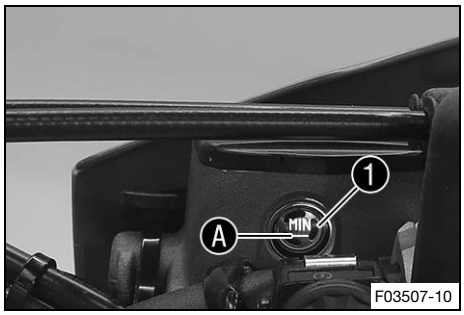

– Move the brake fluid reservoir mounted on the handlebar to a horizontal position.
– Check the brake fluid level in level viewer 1.
  » If the brake fluid level has dropped below the **MIN** marking A:
    – Add front brake fluid. (📖 p. 88)

13.4 Adding front brake fluid

Warning
Danger of accidents An insufficient brake fluid level will cause the brake system to fail.

If the brake fluid level drops below the specified marking or the specified value, the brake system is leaking or the brake linings are worn down.

– Check the brake system and do not continue riding until the problem is eliminated. (Your authorized Husqvarna Motorcycles workshop will be glad to help.)

Warning
Skin irritation Brake fluid causes skin irritation.

– Keep brake fluid out of the reach of children.
– Wear suitable protective clothing and safety glasses.
– Do not allow brake fluid to come into contact with the skin, the eyes or clothing.
– Consult a doctor immediately if brake fluid has been swallowed.
– Rinse the affected area with plenty of water in the event of contact with the skin.
– Rinse eyes thoroughly with water immediately and consult a doctor if brake fluid comes into contact with the eyes.
– If brake fluid spills on to your clothing, change the clothing.

Warning
Danger of accidents Old brake fluid reduces the braking effect.

– Make sure that brake fluid for the front and rear brake is changed in accordance with the service schedule. (Your authorized Husqvarna Motorcycles workshop will be glad to help.)

Note

Environmental hazard Hazardous substances cause environmental damage.

– Dispose of oils, grease, filters, fuel, cleaning agents, brake fluid, etc., correctly and in compliance with the applicable regulations.

Info

Never use DOT 5 brake fluid. It is silicone-based and purple in color. Oil seals and brake lines are not designed for DOT 5 brake fluid.

Avoid contact between brake fluid and painted parts. Brake fluid corrodes paint.

Only use clean brake fluid from a sealed container.

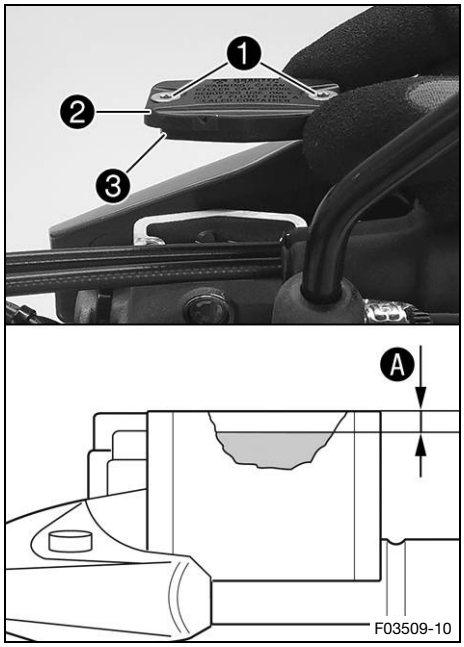

Preparatory work

– Check the front brake linings. (📖 p. 89)

Main work

– Move the brake fluid reservoir mounted on the handlebar to a horizontal position.
– Remove screws ❶.
– Take off cover ❷ with membrane ❸.
– Add brake fluid to level Ⓐ.

Guideline

Level Ⓐ (brake fluid level below reservoir rim)	5 mm (0.2 in)

Brake fluid DOT 4 / DOT 5.1 (📖 p. 150)

– Position the cover with the membrane. Mount and tighten the screws.

Info

Use water to immediately clean up any brake fluid that has overflowed or spilled.

13.5 Checking the front brake linings

Warning

Danger of accidents Worn-out brake linings reduce the braking effect.

– Ensure that worn-out brake linings are replaced immediately. (Your authorized Husqvarna Motorcycles workshop will be glad to help.)

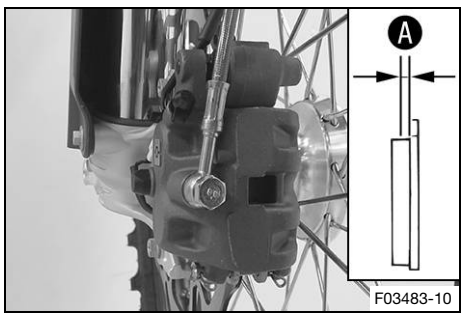

– Check the brake linings for minimum thickness Ⓐ.

Minimum thickness Ⓐ	≥ 1 mm (≥ 0.04 in)

» If the minimum thickness is less than specified:
  – Change the brake linings of the front brake. 🔧 (📖 p. 90)

– Check the brake linings for damage and cracking.

» If damage or cracking is visible:
  – Change the brake linings of the front brake. 🔧 (📖 p. 90)

13.6 Changing the brake linings of the front brake

Warning

Danger of accidents Incorrect servicing will cause the brake system to fail.

– Ensure that service work and repairs are performed professionally. (Your authorized Husqvarna Motorcycles workshop will be glad to help.)

Warning

Skin irritation Brake fluid causes skin irritation.

– Keep brake fluid out of the reach of children.
– Wear suitable protective clothing and safety glasses.
– Do not allow brake fluid to come into contact with the skin, the eyes or clothing.
– Consult a doctor immediately if brake fluid has been swallowed.
– Rinse the affected area with plenty of water in the event of contact with the skin.
– Rinse eyes thoroughly with water immediately and consult a doctor if brake fluid comes into contact with the eyes.
– If brake fluid spills on to your clothing, change the clothing.

Warning

Danger of accidents Old brake fluid reduces the braking effect.

– Make sure that brake fluid for the front and rear brake is changed in accordance with the service schedule. (Your authorized Husqvarna Motorcycles workshop will be glad to help.)

Warning

Danger of accidents Oil or grease on the brake discs reduces the braking effect.

– Always keep the brake discs free of oil and grease.
– Clean the brake discs with brake cleaner when necessary.

Warning

Danger of accidents Brake linings which have not been approved alter the braking efficiency.

Not all brake linings are tested and approved for Husqvarna motorcycles. The structure and friction coefficient of the brake linings, and thus their brake power, may vary greatly from that of original brake linings.

If brake linings are used that differ from the original equipment, compliance with the original homologation is not guaranteed. In this case, the vehicle no longer corresponds to its condition at delivery and the manufacturer warranty shall be void.

– Only use brake linings approved and recommended by Husqvarna motorcycles.

Note

Environmental hazard Hazardous substances cause environmental damage.

– Dispose of oils, grease, filters, fuel, cleaning agents, brake fluid, etc., correctly and in compliance with the applicable regulations.

Info

Never use DOT 5 brake fluid. It is silicone-based and purple in color. Oil seals and brake lines are not designed for DOT 5 brake fluid.

Avoid contact between the brake fluid and painted parts. Brake fluid corrodes paint.

Only use clean brake fluid from a sealed container.

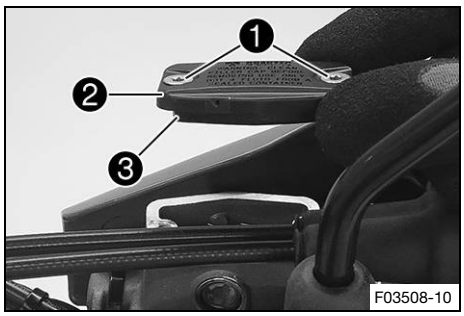

– Move the brake fluid reservoir mounted on the handlebar to a horizontal position.
– Remove screws ❶.
– Take off cover ❷ with membrane ❸.

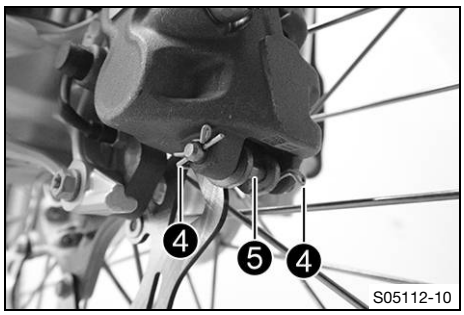

– Manually press the brake caliper toward the brake disc to push back the brake pistons. Ensure that brake fluid does not flow out of the brake fluid reservoir, extract some if necessary.

Info
Make sure that you do not press the brake caliper against the spokes when pushing back the brake pistons.

– Remove cotter pin ❹.
– Pull out pin ❺.
– Remove the brake linings.
– Clean the brake caliper and the brake caliper bracket.

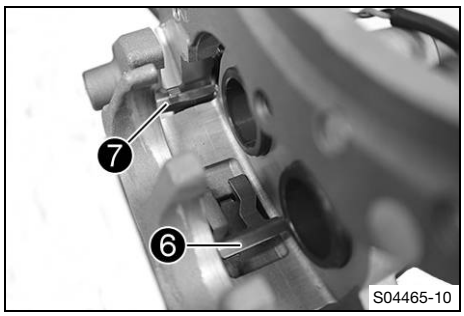

– Check that spring plate ❻ in the brake caliper and brake pad sliding plate ❼ in the brake caliper bracket are seated correctly.

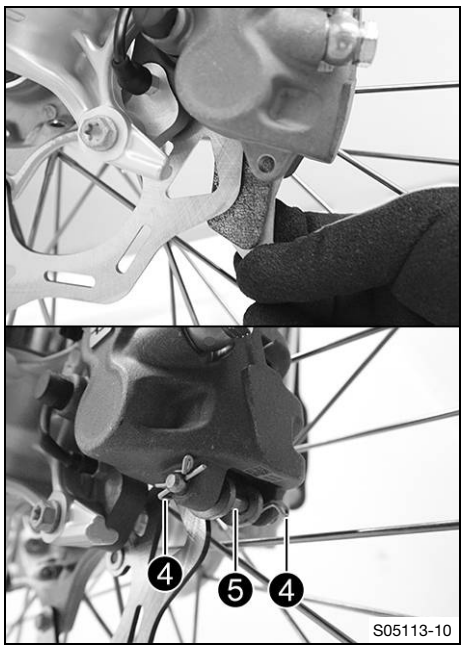

– Insert the new brake linings.
– Mount pin ❺.
  ✔ Spring plate ❻ engages in the groove on the pin.

Info
Always change the brake linings in pairs.

– Mount cotter pins ❹.

Guideline

Mount the outer cotter pins from the front to the rear.
Mount the inner cotter pins from the rear to the front.

– Operate the hand brake lever repeatedly until the brake linings are in contact with the brake disc and there is a pressure point.

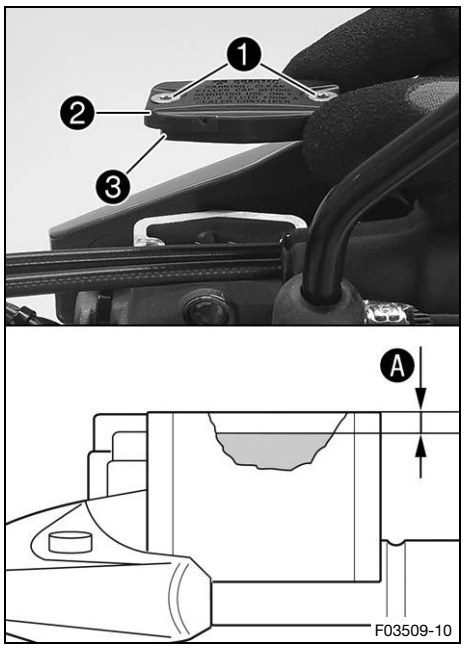

– Add brake fluid up to level A.

Guideline

Level A (brake fluid level below reservoir rim)	5 mm (0.2 in)

Brake fluid DOT 4 / DOT 5.1 (p. 150)

– Position cover 2 with membrane 3.
– Mount and tighten screws 1.

Info
Use water to immediately clean up any brake fluid that has overflowed or spilled.

13.7 Checking the free travel of foot brake lever

Warning
Danger of accidents The brake system fails in the event of overheating.

If there is no free travel on the foot brake lever, pressure builds up in the brake system on the rear brake.

– Set the free travel on the foot brake lever in accordance with the specification.

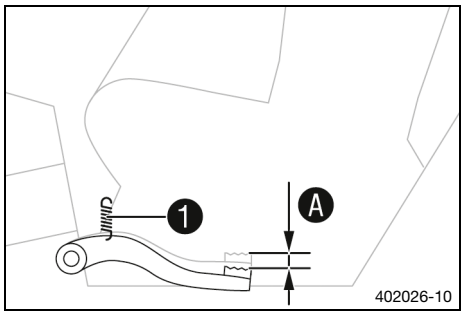

– Disconnect spring 1.
– Move the foot brake lever back and forth between the end stop and the contact to the foot brake cylinder piston and check free travel A.

Guideline

Free travel at foot brake lever	3 … 5 mm (0.12 … 0.2 in)

» If the free travel does not meet specifications:
  – Adjust the basic position of the foot brake lever. (p. 93)

– Reconnect spring 1.

13.8 Adjusting the basic position of the foot brake lever

Warning
Danger of accidents The brake system fails in the event of overheating.

If there is no free travel on the foot brake lever, pressure builds up in the brake system on the rear brake.

– Set the free travel on the foot brake lever in accordance with the specification.

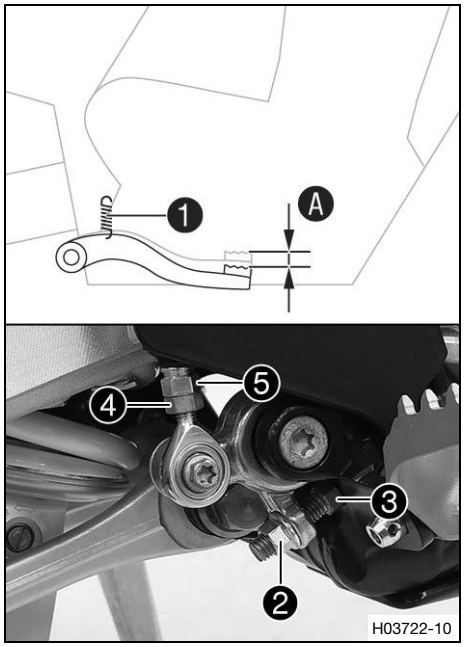

– Detach spring ❶.
– Loosen nut ❹ and, with push rod ❺, turn it back until you have maximum free travel.
– To adjust the basic position of the foot brake lever to individual requirements, loosen nut ❷ and turn screw ❸ accordingly.

Info
The range of adjustment is limited.

– Turn push rod ❺ accordingly until you have free travel Ⓐ. If necessary, adjust the basic position of the foot brake lever.

Guideline

Free travel at foot brake lever	3 … 5 mm (0.12 … 0.2 in)

– Hold screw ❸ and tighten nut ❷.

Guideline

Nut, foot brake lever stop	M8	20 Nm (14.8 lbf ft)

– Hold push rod ❺ and tighten nut ❹.

Guideline

Remaining nuts, chassis	M6	10 Nm (7.4 lbf ft)

– Attach spring ❶.

13.9 Checking the rear brake fluid level

Warning
Danger of accidents An insufficient brake fluid level will cause the brake system to fail.

If the brake fluid level drops below the **MIN** marking, the brake system is leaking or the brake linings are worn down.

– Check the brake system and do not continue riding until the problem is eliminated. (Your authorized Husqvarna Motorcycles workshop will be glad to help.)

Warning
Danger of accidents Old brake fluid reduces the braking effect.

– Make sure that brake fluid for the front and rear brake is changed in accordance with the service schedule. (Your authorized Husqvarna Motorcycles workshop will be glad to help.)

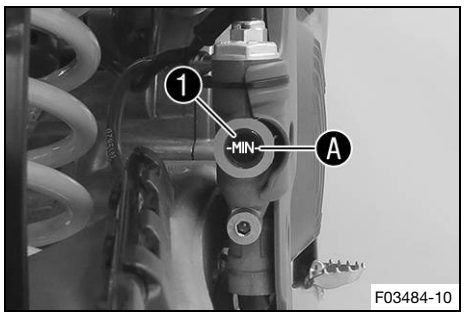

– Position the vehicle vertically.
– Check the brake fluid level in level viewer ❶.
  » If the brake fluid level has dropped below the **MIN** marking Ⓐ:
    – Add rear brake fluid. (p. 94)

13.10 Adding rear brake fluid

Warning
Danger of accidents An insufficient brake fluid level will cause the brake system to fail.

If the brake fluid level drops below the specified marking or the specified value, the brake system is leaking or the brake linings are worn down.

– Check the brake system and do not continue riding until the problem is eliminated. (Your authorized Husqvarna Motorcycles workshop will be glad to help.)

Warning
Skin irritation Brake fluid causes skin irritation.

– Keep brake fluid out of the reach of children.
– Wear suitable protective clothing and safety glasses.
– Do not allow brake fluid to come into contact with the skin, the eyes or clothing.
– Consult a doctor immediately if brake fluid has been swallowed.
– Rinse the affected area with plenty of water in the event of contact with the skin.
– Rinse eyes thoroughly with water immediately and consult a doctor if brake fluid comes into contact with the eyes.
– If brake fluid spills on to your clothing, change the clothing.

Warning
Danger of accidents Old brake fluid reduces the braking effect.

– Make sure that brake fluid for the front and rear brake is changed in accordance with the service schedule. (Your authorized Husqvarna Motorcycles workshop will be glad to help.)

Note
Environmental hazard Hazardous substances cause environmental damage.

– Dispose of oils, grease, filters, fuel, cleaning agents, brake fluid, etc., correctly and in compliance with the applicable regulations.

Info
Never use DOT 5 brake fluid. It is silicone-based and purple in color. Oil seals and brake lines are not designed for DOT 5 brake fluid.
Avoid contact between brake fluid and painted parts. Brake fluid corrodes paint.
Only use clean brake fluid from a sealed container.

Preparatory work
– Check the rear brake linings. (p. 95)

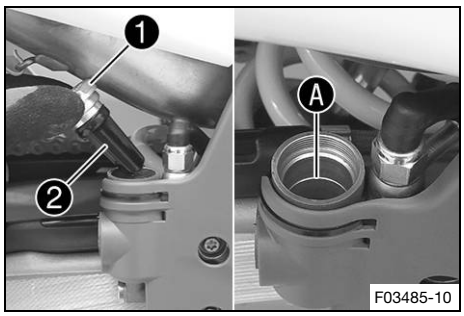

Main work

– Position the vehicle vertically.
– Remove screw cap ❶ with membrane ❷.
– Add brake fluid up to the marking Ⓐ.

Brake fluid DOT 4 / DOT 5.1 (📖 p. 150)

– Mount and tighten the screw cap with the membrane.

Info
Use water to immediately clean up any brake fluid that has overflowed or spilled.

13.11 Checking the rear brake linings

Warning
Danger of accidents Worn-out brake linings reduce the braking effect.
– Ensure that worn-out brake linings are replaced immediately. (Your authorized Husqvarna Motorcycles workshop will be glad to help.)

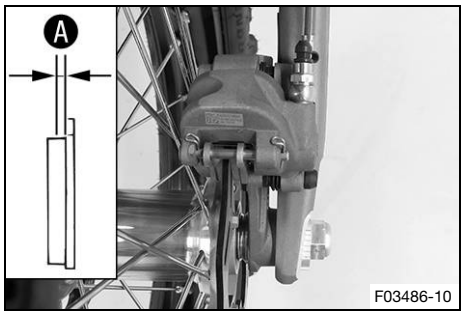

– Check the brake linings for minimum thickness Ⓐ.

Minimum thickness Ⓐ	≥ 1 mm (≥ 0.04 in)

» If the minimum thickness is less than specified:
– Change the rear brake linings. 🔧 (📖 p. 95)

– Check the brake linings for damage and cracking.
» If damage or cracking is visible:
– Change the rear brake linings. 🔧 (📖 p. 95)

13.12 Changing the rear brake linings 🔧

Warning
Danger of accidents Incorrect servicing will cause the brake system to fail.
– Ensure that service work and repairs are performed professionally. (Your authorized Husqvarna Motorcycles workshop will be glad to help.)

Warning
Skin irritation Brake fluid causes skin irritation.
– Keep brake fluid out of the reach of children.
– Wear suitable protective clothing and safety glasses.
– Do not allow brake fluid to come into contact with the skin, the eyes or clothing.
– Consult a doctor immediately if brake fluid has been swallowed.
– Rinse the affected area with plenty of water in the event of contact with the skin.
– Rinse eyes thoroughly with water immediately and consult a doctor if brake fluid comes into contact with the eyes.
– If brake fluid spills on to your clothing, change the clothing.

Warning

Danger of accidents Old brake fluid reduces the braking effect.

– Make sure that brake fluid for the front and rear brake is changed in accordance with the service schedule. (Your authorized Husqvarna Motorcycles workshop will be glad to help.)

Warning

Danger of accidents Oil or grease on the brake discs reduces the braking effect.

– Always keep the brake discs free of oil and grease.
– Clean the brake discs with brake cleaner when necessary.

Warning

Danger of accidents Brake linings which have not been approved alter the braking efficiency.

Not all brake linings are tested and approved for Husqvarna motorcycles. The structure and friction coefficient of the brake linings, and thus their brake power, may vary greatly from that of original brake linings.

If brake linings are used that differ from the original equipment, compliance with the original homologation is not guaranteed. In this case, the vehicle no longer corresponds to its condition at delivery and the manufacturer warranty shall be void.

– Only use brake linings approved and recommended by Husqvarna motorcycles.

Note

Environmental hazard Hazardous substances cause environmental damage.

– Dispose of oils, grease, filters, fuel, cleaning agents, brake fluid, etc., correctly and in compliance with the applicable regulations.

Info

Never use DOT 5 brake fluid. It is silicone-based and purple in color. Oil seals and brake lines are not designed for DOT 5 brake fluid.

Avoid contact between brake fluid and painted parts. Brake fluid corrodes paint.

Only use clean brake fluid from a sealed container.

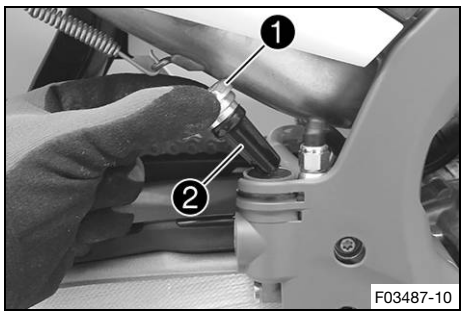

– Position the vehicle vertically.
– Remove screw cap ❶ with membrane ❷.

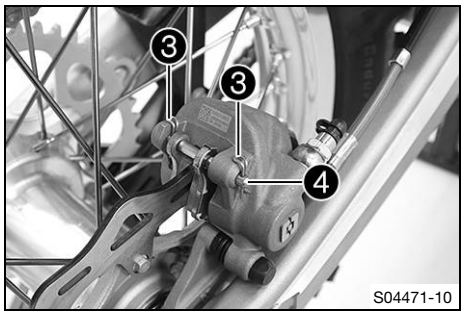

– Manually press the brake caliper toward the brake disc to push back the brake piston. Ensure that brake fluid does not flow out of the brake fluid reservoir; extract some if necessary.

Info

Make sure that you do not press the brake caliper against the spokes when pushing back the brake piston.

– Remove cotter pin ❸.
– Pull out pin ❹.

– Remove the brake linings.
– Clean the brake caliper and the brake caliper bracket.
– Check that spring plate in the brake caliper and brake pad sliding plate in the brake caliper bracket are fitted correctly.

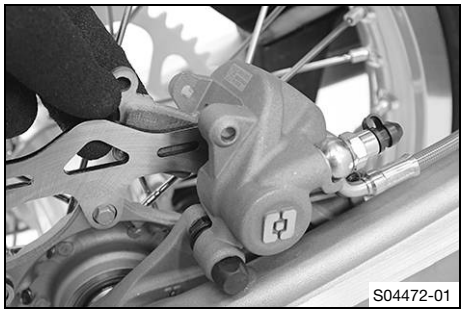
S04472-01

– Insert the new brake linings.
– Mount pin ❹.
  ✓ The spring plate engages in the groove on the pin.

Info
Always change the brake linings in pairs.

– Mount cotter pins ❸.
– Operate the foot brake lever repeatedly until the brake linings are in contact with the brake disc and there is a pressure point.

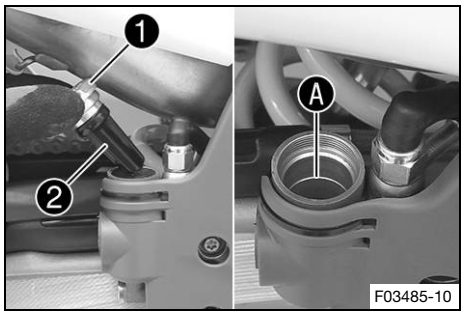

F03485-10

– Correct brake fluid level to marking Ⓐ.

Brake fluid DOT 4 / DOT 5.1 (📖 p. 150)

– Mount and tighten screw cap ❶ with membrane ❷.

Info
Use water to immediately clean up any brake fluid that has overflowed or spilled.

14.1 Removing the front wheel

Preparatory work

– Raise the motorcycle with a lift stand. (p. 53)

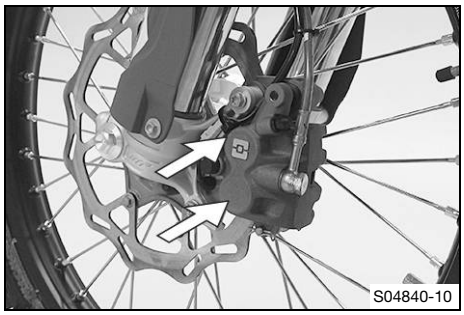

Main work

– Manually press the brake caliper toward the brake disc to push back the brake pistons.

Info
Make sure that you do not press the brake caliper against the spokes when pushing back the brake pistons.

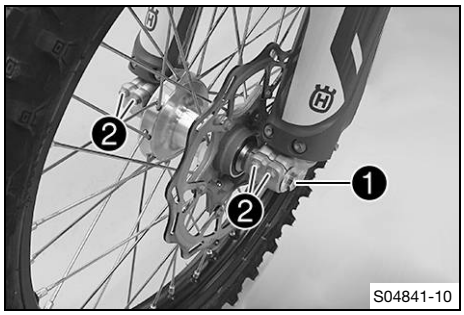

– Loosen screw ❶ by several rotations.
– Loosen screws ❷.
– Press on screw ❶ to push the wheel spindle out of the axle clamp.
– Remove screw ❶.

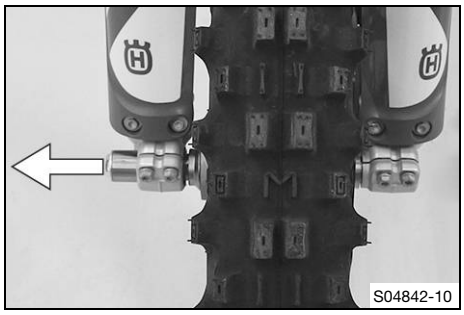

Warning
Danger of accidents Damaged brake discs reduce the braking effect.
– Always lay the wheel down in such a way that the brake disc is not damaged.

– Hold front wheel and remove wheel spindle. Take front wheel out of the fork.

Info
Do not actuate the hand brake lever when the front wheel is removed.

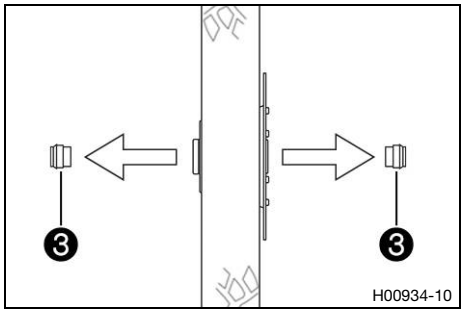

– Remove spacers ❸.

14.2 Installing the front wheel

Warning

Danger of accidents Oil or grease on the brake discs reduces the braking effect.

– Always keep the brake discs free of oil and grease.
– Clean the brake discs with brake cleaner when necessary.

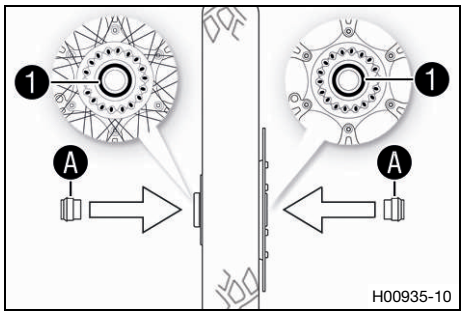

– Check the wheel bearing for damage and wear.
  » If the wheel bearing is damaged or worn:
    – Change front wheel bearing.
– Clean and grease shaft seal rings ❶ and contact surfaces Ⓐ of the spacers.

Long-life grease (📖 p. 152)

– Insert the spacers.

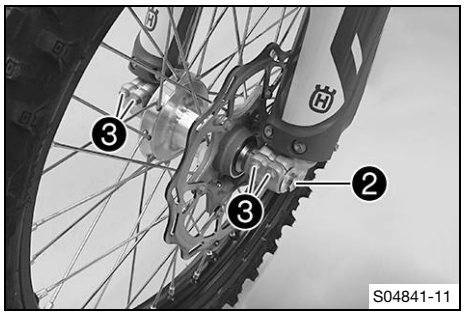

– Clean and grease the wheel spindle.

Long-life grease (📖 p. 152)

– Position the front wheel and insert the wheel spindle.
  ✔ The brake linings are correctly positioned.
– Mount and tighten screw ❷.
  Guideline

Screw, front wheel spindle	M20x1.5	35 Nm (25.8 lbf ft)

– Operate the hand brake lever several times until the brake linings are seated correctly against the brake disc.
– Remove the motorcycle from the lift stand. (📖 p. 53)
– Operate the front brake and compress the fork a few times firmly.
  ✔ The fork legs straighten.
– Tighten screws ❸.
  Guideline

Screw, fork stub	M8	15 Nm (11.1 lbf ft)

14.3 Removing the rear wheel

Preparatory work

– Raise the motorcycle with a lift stand. (📖 p. 53)

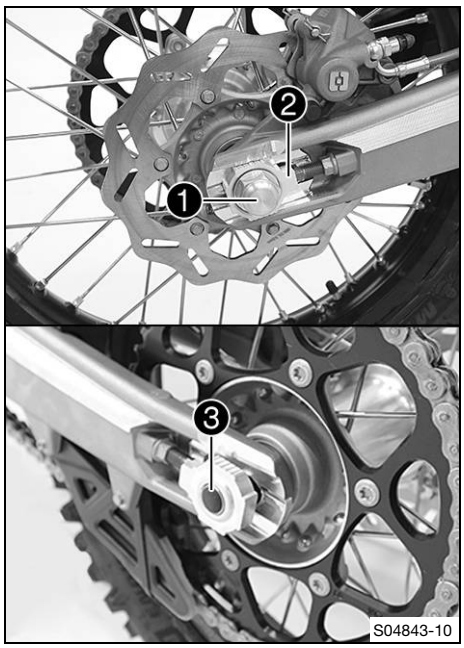

Main work

– Manually press the brake caliper toward the brake disc to push back the brake piston.

Info
Make sure that you do not press the brake caliper against the spokes when pushing back the brake piston.

– Remove nut ❶.
– Take off chain adjuster ❷. Pull out wheel spindle ❸ far enough to allow the rear wheel to be pushed forward.
– Push the rear wheel forward as far as possible. Remove the chain from the rear sprocket.

Info
Cover the components to protect them against damage.

Warning
Danger of accidents Damaged brake discs reduce the braking effect.
– Always lay the wheel down in such a way that the brake disc is not damaged.

– Hold the rear wheel and remove the wheel spindle. Take the rear wheel out of the link fork.

Info
Do not operate the foot brake lever when the rear wheel is removed.

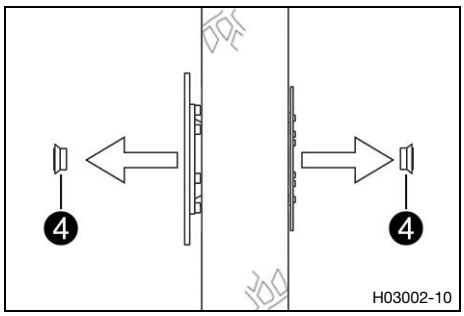

– Remove spacers ❹.

14.4 Installing the rear wheel

Warning
Danger of accidents Oil or grease on the brake discs reduces the braking effect.
– Always keep the brake discs free of oil and grease.
– Clean the brake discs with brake cleaner when necessary.

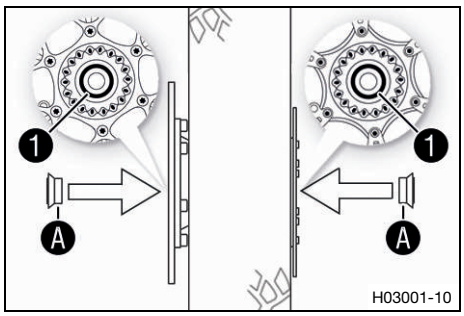

Main work

– Check the wheel bearing for damage and wear.
  » If the wheel bearing is damaged or worn:
    – Change the rear wheel bearing.
– Clean and grease shaft seal rings ❶ and contact surfaces Ⓐ of the spacers.

Long-life grease (📖 p. 152)

– Insert the spacers.

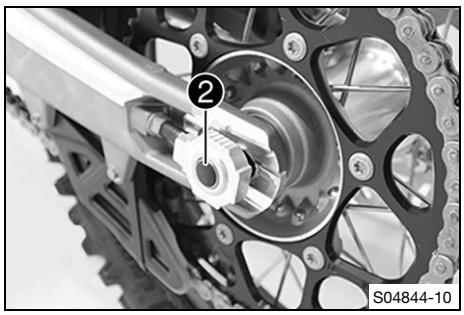

– Clean and grease the wheel spindle.

Long-life grease (📖 p. 152)

– Position rear wheel and insert wheel spindle ❷.
– Mount the chain.
  ✔ The brake linings are correctly positioned.

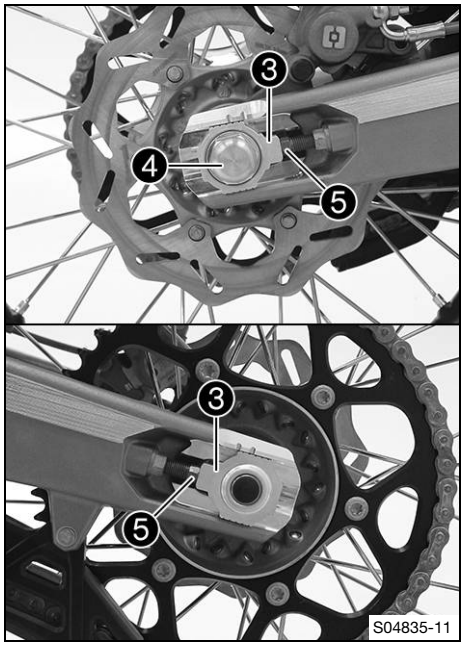

– Position chain adjuster ❸. Mount nut ❹, but do not tighten it yet.
– Make sure that chain adjusters ❸ are fitted correctly on adjusting screws ❺.
– Check the chain tension. (📖 p. 76)
– Tighten nut ❹.

  Guideline

Nut, rear wheel spindle	M20x1.5	80 Nm (59 lbf ft)

Info
The wide adjustment range of the chain adjusters (32 mm (1.26 in)) enables different secondary ratios with the same chain length.
Chain adjusters ❸ can be turned by 180°.

– Operate the foot brake lever repeatedly until the brake linings are in contact with the brake disc and there is a pressure point.

Finishing work

– Remove the motorcycle from the lift stand. (📖 p. 53)

14.5 Checking the tire condition

Info
Only mount tires approved and/or recommended by Husqvarna Motorcycles.
Other tires could have a negative effect on handling characteristics.
The type, condition, and pressure of the tires all have a major impact on the handling characteristic of the motorcycle.
The tires mounted on the front and rear wheels must have a similar profile.
Worn tires have a negative effect on handling characteristics, especially on wet surfaces.

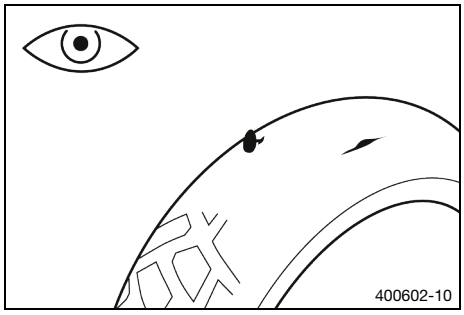

– Check the front and rear tires for cuts, run-in objects, and other damage.
  » If the tires have cuts, run-in objects, or other damage:
    – Change the tires.
– Check the tread depth.

Info
Adhere to the legally required minimum tread depth.

Minimum tread depth	≥ 2 mm (≥ 0.08 in)

  » If the tread depth is less than the minimum tread depth:
    – Change the tires.

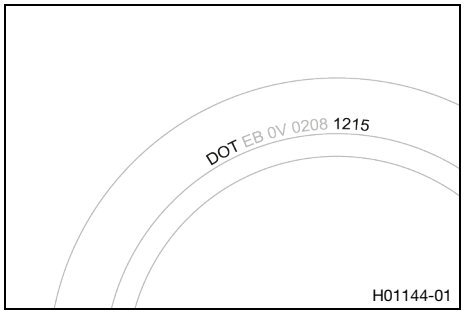

– Check the tire age.

Info
The tire date of manufacture is usually contained in the tire label and is indicated by the last four digits of the **DOT** number. The first two digits indicate the week of manufacture and the last two digits the year of manufacture.
Husqvarna Motorcycles recommends that the tires be changed after 5 years at the latest, regardless of the actual state of wear.

  » If the tires are more than 5 years old:
    – Change the tires.

14.6 Checking tire pressure

Info
Low tire pressure leads to abnormal wear and overheating of the tire.
Correct tire pressure ensures optimal riding comfort and maximum tire service life.

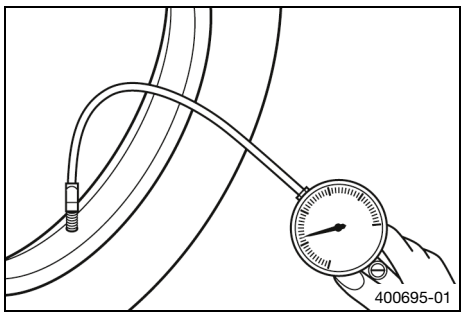

– Remove the protection cap.
– Check tire pressure when the tires are cold.

Offroad tire pressure	
front	1.0 bar (15 psi)
rear	1.0 bar (15 psi)

Street tire pressure	
front	1.5 bar (22 psi)
rear	1.8 bar (26 psi)

» If the tire pressure does not meet specifications:
  – Correct tire pressure.
– Mount the protection cap.

14.7 Checking spoke tension

Warning
Danger of accidents Incorrectly tensioned spokes impair the handling characteristic and result in secondary damage.

The spokes break due to being overloaded if they are too tightly tensioned. If the tension in the spokes is too low, then lateral and radial run-out will form in the wheel. Other spokes will become looser as a result.

– Check spoke tension regularly, and in particular on a new vehicle. (Your authorized Husqvarna Motorcycles workshop will be glad to help.)

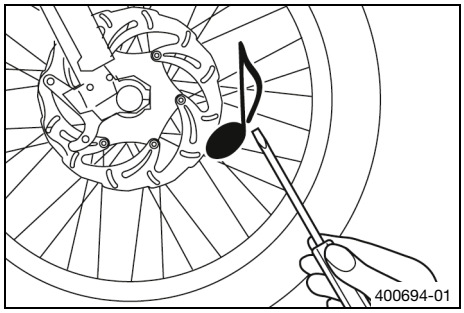

– Strike each spoke briefly using a screwdriver blade.

Info
The frequency of the sound depends on the spoke length and spoke diameter.
If you hear different tone frequencies from different spokes of equal length and diameter, this is an indication of different spoke tensions.

You should hear a high note.

» If the spoke tension differs:
  – Correct the spoke tension.
– Check the spoke torque.

Guideline

Spoke nipple, front wheel	M4.5	6 Nm (4.4 lbf ft)
Spoke nipple, rear wheel	M4.5	6 Nm (4.4 lbf ft)

Torque wrench kit (58429094000)

15.1 Removing the 12-V battery

Note
Environmental hazard 12 V batteries contain environmentally hazardous materials.
- Do not dispose of 12 V batteries as household waste.
- Dispose of 12 V batteries at a collection point for used batteries.

Note
Environmental hazard Hazardous substances cause environmental damage.
- Dispose of oils, grease, filters, fuel, cleaning agents, brake fluid, etc., correctly and in compliance with the applicable regulations.

Preparatory work
- Remove the air filter box cover. (p. 67)
- Remove the seat. (p. 65)

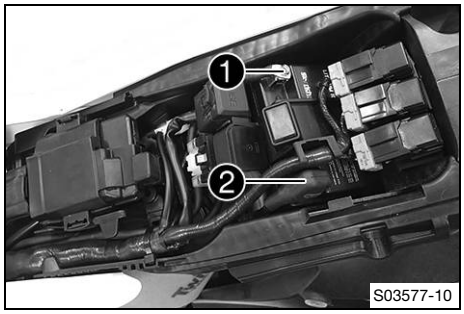

Main work

Warning
Risk of injury 12 V batteries contain harmful substances.
- Keep 12 V batteries out of the reach of children.
- Keep sparks and open flames away from 12 V batteries.
- Only charge 12 V batteries in well-ventilated rooms.
- Maintain a minimum clearance from inflammable materials when charging 12 V batteries.
  Minimum clearance 1 m (3 ft)
- Do not charge deeply discharged 12 V batteries if the charge is already below the minimum voltage.
  Minimum voltage before the start of the charge 9 V
- Dispose of 12 V batteries with less than the minimum voltage correctly.

- Disconnect negative cable ❶ from the 12-V battery.
- Pull back positive terminal cover ❷ and disconnect the positive cable from the 12-V battery.

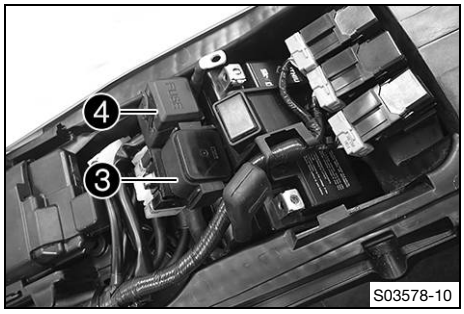

- Remove starter relay ❸ and fuse box ❹ from the holding bracket and hang to the side.

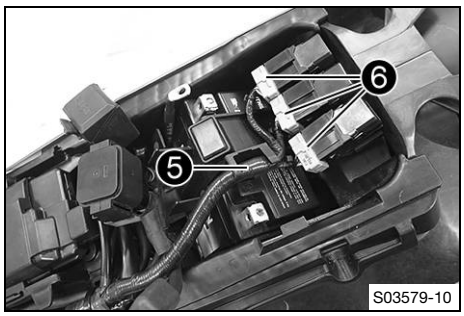

– Detach wiring harness ❺, disconnect relays ❻ and hang them to the side.

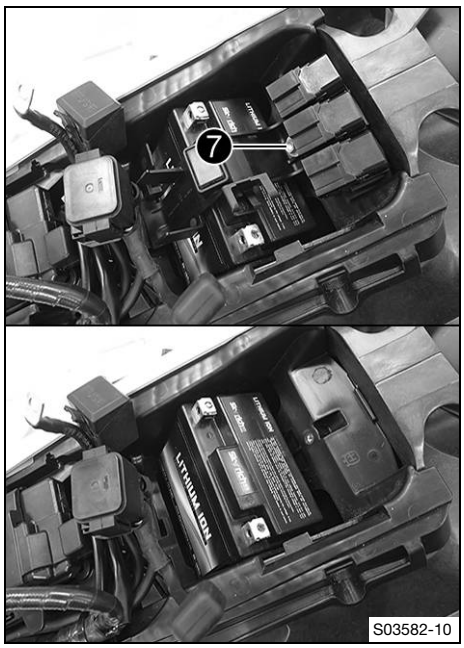

– Remove screw ❼ and unhook the holding bracket.
– Lift out the 12-V battery.

15.2 Installing the 12-V battery

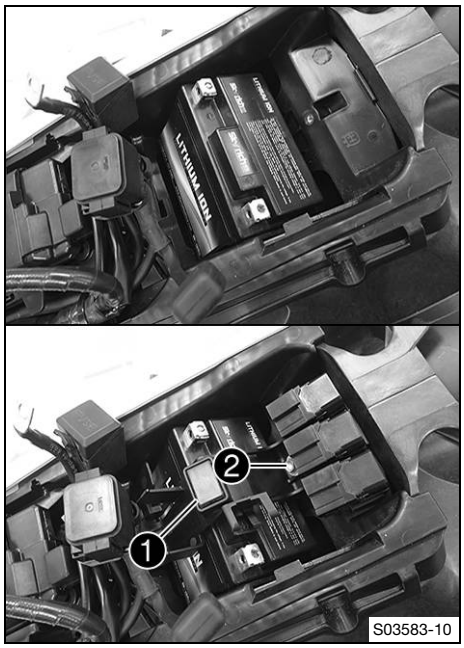

Main work

– Insert the 12-V battery into the battery compartment with the terminals facing forward and secure with holding bracket ❶.

12-V battery (HJTZ5S-FP-C) (📖 p. 145)

– Mount and tighten screw ❷.

Guideline

Screw, battery support bracket	M6	6 Nm (4.4 lbf ft)

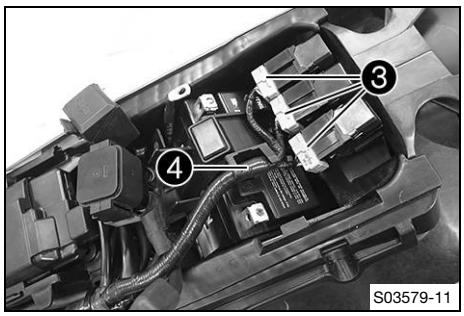

– Place the relays ❸ on the holding bracket and attach wiring harness ❹.

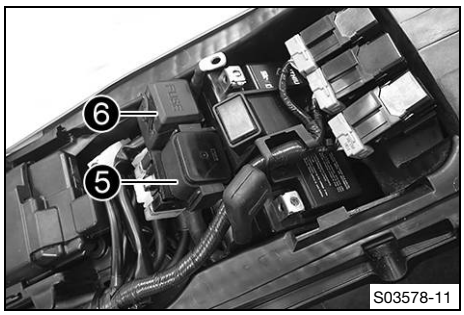

– Attach starter relay ❺ and fuse box ❻ to the holding bracket.

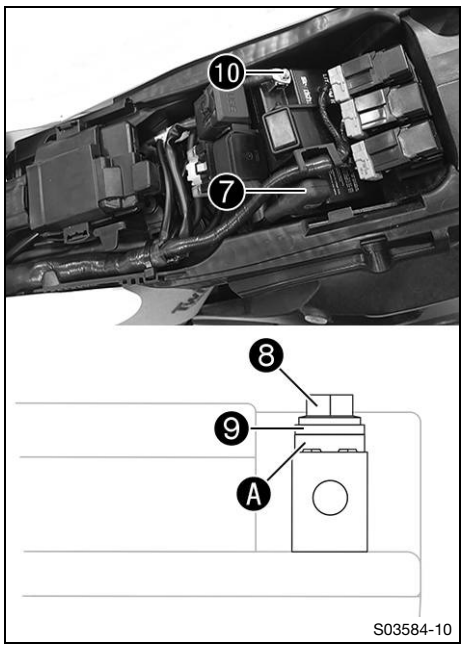

– Connect positive cable ❼ to the 12-V battery.

Guideline

Screw, battery terminal	M5	2.5 Nm (1.84 lbf ft)

Info

Contact disk Ⓐ must be mounted under screw ❽ and cable lug ❾ with the claws toward the battery terminal.

– Slide the positive terminal cover over the positive terminal.

– Connect negative cable ❿ to the 12 V battery.

Guideline

Screw, battery terminal	M5	2.5 Nm (1.84 lbf ft)

Info

Contact disk Ⓐ must be mounted under screw ❽ and cable lug ❾ with the claws toward the battery terminal.

Finishing work

– Mount the seat. (📖 p. 66)

– Install the air filter box cover. (📖 p. 67)

15.3 Charging the 12-V battery

Warning

Risk of injury 12 V batteries contain harmful substances.

- Keep 12 V batteries out of the reach of children.
- Keep sparks and open flames away from 12 V batteries.
- Only charge 12 V batteries in well-ventilated rooms.
- Maintain a minimum clearance from inflammable materials when charging 12 V batteries.
  Minimum clearance 1 m (3 ft)
- Do not charge deeply discharged 12 V batteries if the charge is already below the minimum voltage.
  Minimum voltage before the start of the charge 9 V
- Dispose of 12 V batteries with less than the minimum voltage correctly.

Note

Environmental hazard 12 V batteries contain environmentally hazardous materials.

- Do not dispose of 12 V batteries as household waste.
- Dispose of 12 V batteries at a collection point for used batteries.

Note

Environmental hazard Hazardous substances cause environmental damage.

- Dispose of oils, grease, filters, fuel, cleaning agents, brake fluid, etc., correctly and in compliance with the applicable regulations.

Info

Even if there is no load on the 12-V battery, it discharges each day.
The charging level and the method of charging are very important for the service life of the 12-V battery.
Rapid recharging with a high charging current shortens the service life of the battery.
If the charging current or charging voltage are exceeded, the 12-V battery will be destroyed.
If the 12-V battery is depleted by repeated starting, the 12-V battery must be charged immediately.
If the 12-V battery is left in a discharged state for an extended period, it will become deeply discharged and suffer a loss of capacity, destroying the battery.
The 12-V battery is maintenance-free.



Preparatory work

- Remove the air filter box cover. (p. 67)
- Remove the seat. (p. 65)
- Remove the 12-V battery. (p. 104)

Main work

- Check the battery voltage.
  - » Battery voltage: < 9 V
    - Do not charge the 12-V battery.
    - Replace the 12-V battery and dispose of the old 12-V battery properly.
  - » If the specifications have been met:
    Battery voltage: ≥ 9 V
    - Connect a battery charger to the 12-V battery. Switch on the battery charger.

Guideline

The charging current, charging voltage, and charging time must not be exceeded.	
Maximum charging voltage	14.4 V
Maximum charging current	3.0 A
Maximum charging time	24 h
Recharge the 12-V battery regularly when the motorcycle is not being used	6 months
Ideal charging and storage temperature of the lithium-ion battery	10 … 20 °C (50 … 68 °F)

Battery charger (26529974000)

This battery charger tests whether the 12-V battery retains its voltage. It is also impossible to overcharge the 12-V battery with this battery charger. The charging time may be longer at low temperatures.

This battery charger is only suitable for lithium iron phosphate batteries. Read the accompanying instructions for **Husqvarna Motorcycles** accessories.

Info
Never remove cover ❶.

– Switch off the battery charger after charging and disconnect it from the 12-V battery.

Finishing work
– Install the 12-V battery. (📖 p. 105)
– Mount the seat. (📖 p. 66)
– Install the air filter box cover. (📖 p. 67)

15.4 Changing main fuse

Warning
Fire hazard Incorrect fuses overload the electrical system.
– Only use fuses with the required ampere value.
– Do not bypass or repair fuses.

Info
The main fuse protects all electrical power consumers of the vehicle.

Preparatory work
– Remove the air filter box cover. (📖 p. 67)
– Remove the seat. (📖 p. 65)

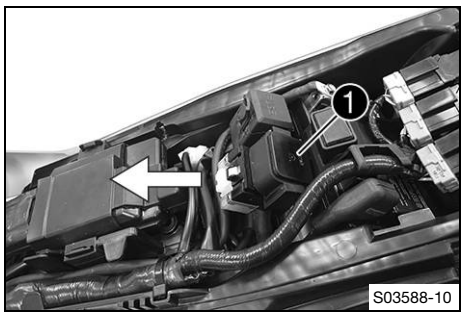

Main work

– Pull starter relay ❶ from the holder.

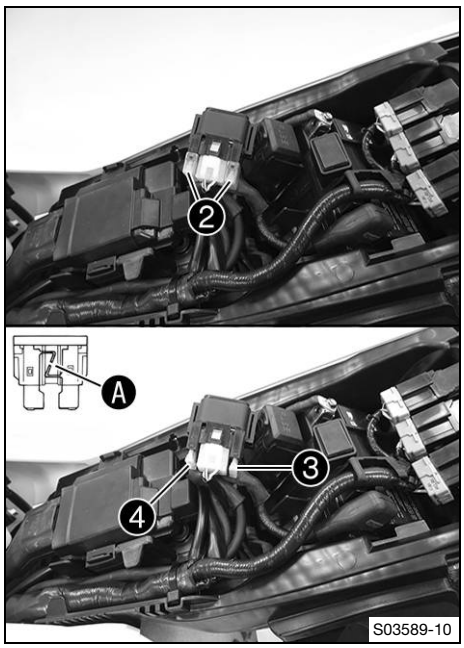

– Take off protection caps ❷.
– Remove faulty main fuse ❸.

Info
A faulty fuse has a burned-out fuse wire Ⓐ.
A spare fuse ❹ is located in the starter relay.

– Insert a new main fuse.

Fuse (58011109120) (📖 p. 145)

– Check that the electrical system is functioning properly.

Tip
Insert a spare fuse so that it is available if needed.

– Mount the protection caps.
– Mount the starter relay onto the holder and route the cable.

Finishing work

– Mount the seat. (📖 p. 66)
– Install the air filter box cover. (📖 p. 67)

15.5 Changing the fuses of individual electrical power consumers

Info
The fuse box containing the fuses of individual electrical power consumers is located under the seat.

Preparatory work

– Remove the air filter box cover. (📖 p. 67)
– Remove the seat. (📖 p. 65)

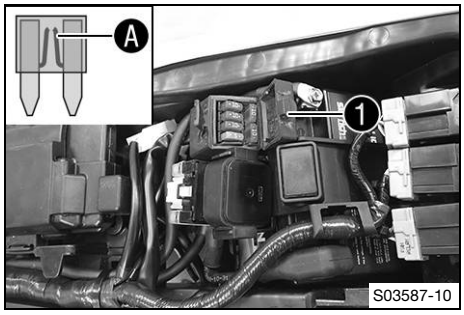

Main work

– Open fuse box cover ❶.
– Remove the faulty fuse.

Guideline

(EU)

Fuse **1** – 10 A – EFI control unit, lambda sensor, combination instrument, combination switch (optional), electronic fuel injection, diagnostics connector, fuel vapor retention system, fuse **4**
Fuse **2** - 10 A - high beam, low beam, position light, tail light, license plate lamp
Fuse **3** - 10 A - radiator fan, horn, brake light, turn signal
Fuse **4** - 5 A - fuel pump
Fuses **res** - 10 A - spare fuse

(CN)

Fuse **1** – 10 A – EFI control unit, combination instrument, combination switch (optional), electronic fuel injection, diagnostics connector, fuse **4**
Fuse **2** - 10 A - high beam, low beam, position light, tail light
Fuse **3** - 10 A - radiator fan
Fuse **4** - 5 A - fuel pump
Fuses **res** - 10 A - spare fuse

Info
A faulty fuse has a burned-out fuse wire Ⓐ.

Warning
Fire hazard Incorrect fuses overload the electrical system.
- Only use fuses with the required ampere value.
- Do not bypass or repair fuses.

– Insert the spare fuse with the correct rating.

Fuse (75011088010) (📖 p. 145)
Fuse (75011088005) (📖 p. 145)

Tip
Put a spare fuse in the fuse box so that it is available if needed.

– Check the function of the electrical power consumers.
– Close the fuse box cover ❶.

Finishing work
– Mount the seat. (📖 p. 66)
– Install the air filter box cover. (📖 p. 67)

15.6 Removing the headlight mask with the headlight

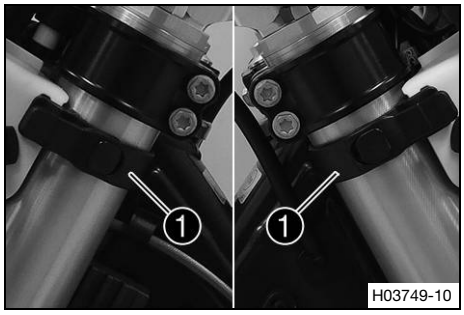

– Loosen rubber straps ❶. Slide the headlight mask up and swing it forward.

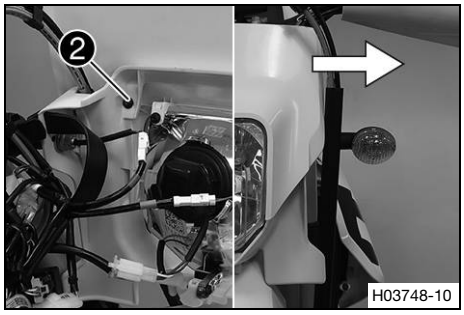

– Remove screw ❷.
– Detach the brake line and wiring harness from the headlight mask.
– Pivot the headlight mask forwards and place it on the fender.

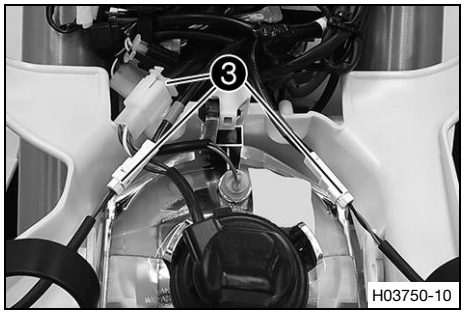

(EU)

– Detach plug-in connectors ❸ and take off the headlight mask with the headlight.

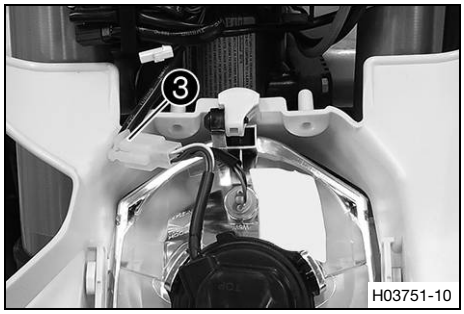

(CN)

– Disconnect plug-in connector ❸ and take off the headlight mask together with the headlight.

15.7 Installing the headlight mask with the headlight

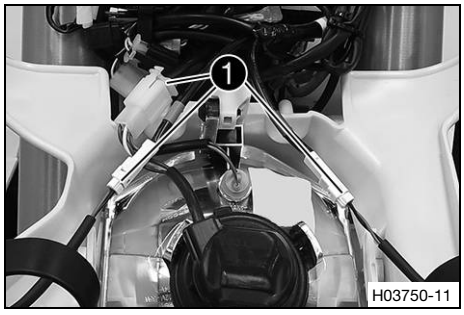

Main work

(EU)

– Join plug-in connectors ❶.

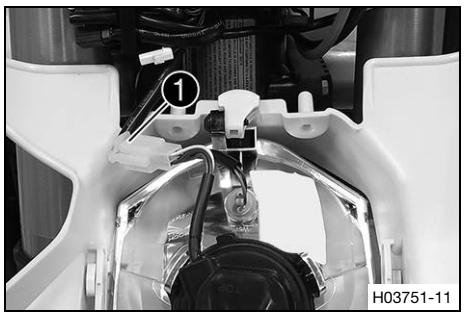

(CN)

– Join plug-in connector ❶.



– Position the brake line and the wiring harness in the cable guide.
– Mount and tighten screw ❷.
– Position the headlight mask.
  ✔ The holding lugs engage in the fender.

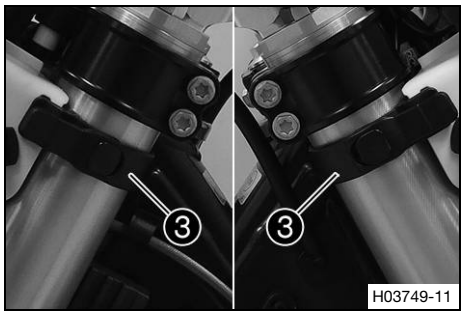

– Secure the headlight mask with rubber straps ❸.

Finishing work

– Check the headlight setting. (📖 p. 114)

15.8 Changing the headlight bulb

Note

Damage to reflector Grease on the reflector reduces the light intensity.

Grease on the bulb will evaporate due to the heat and be deposited on the reflector.

– Clean and degrease the bulbs before mounting.
– Do not touch the bulbs with your bare hands.

Preparatory work

– Remove the headlight mask with the headlight. (📖 p. 111)

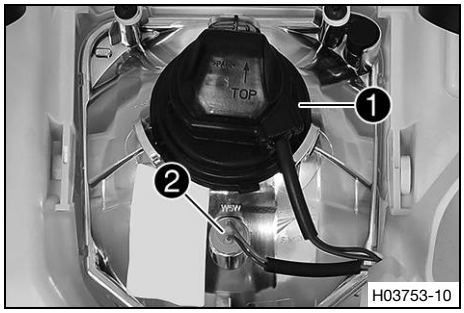

H03753-10

Main work

– Turn protection cap ❶ together with the underlying bulb socket counterclockwise all the way and remove it.
– Pull bulb socket ❷ of the position light out of the reflector.

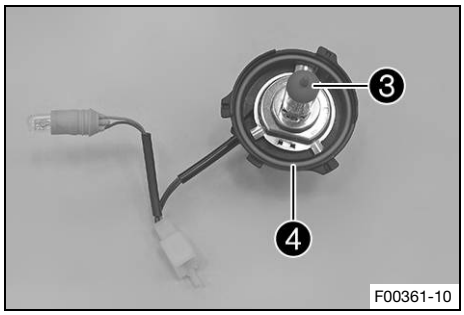

F00361-10

– Pull out headlight bulb ❸.
– Insert the new headlight bulb.

Headlight (HS1/socket PX43t) (📖 p. 145)

– Insert the protection cap with the bulb socket into the reflector and turn it clockwise all the way.

Info
Ensure that O-ring ❹ is seated properly.

– Insert the bulb socket of the position light into the reflector.

Finishing work

– Install the headlight mask with the headlight. (📖 p. 111)
– Check the headlight setting. (📖 p. 114)

15.9 Changing the turn signal bulb (EU)

Note

Damage to reflector Grease on the reflector reduces the light intensity.

Grease on the bulb will evaporate due to the heat and be deposited on the reflector.

– Clean and degrease the bulbs before mounting.
– Do not touch the bulbs with your bare hands.

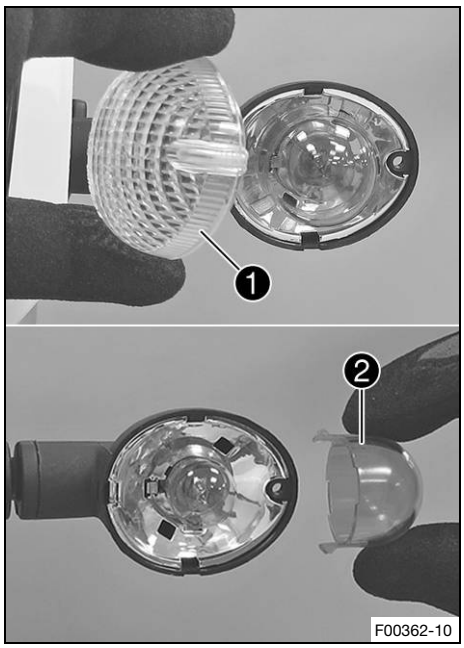

Main work

– Remove the screw on the rear of the turn signal housing.
– Carefully remove turn signal glass ❶.
– Lightly squeeze orange cap ❷ in the area of the holding lugs and take it off.
– Press the turn signal bulb lightly into the socket, turn it counterclockwise by about 30°, and pull it out of the socket.

Info
Do not touch the reflector with your fingers and keep it free from grease.

– Press the new turn signal bulb carefully into the socket and turn it clockwise until it stops.

Turn signal (R10W / socket BA15s) (📖 p. 145)

– Mount the orange cap.
– Position the turn signal glass.
– Insert the screw and first turn counterclockwise until it engages in the thread with a small jerk. Tighten the screw lightly.

Finishing work

– Check that the turn signal system is functioning properly.

15.10 Checking the headlight setting

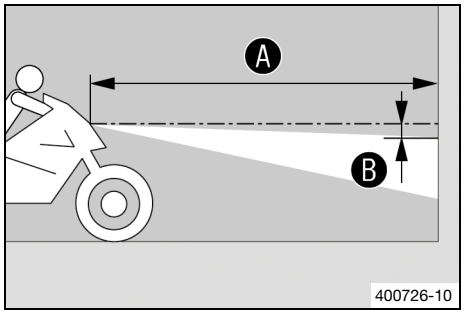

– Position the vehicle upright on a horizontal surface in front of a light wall and make a marking at the height of the center of the low beam headlight.
– Make another mark at a distance Ⓑ under the first marking.

Guideline

Distance Ⓑ	5 cm (2 in)

– Position the vehicle vertically at a distance Ⓐ away from the wall.

Guideline

Distance Ⓐ	5 m (16 ft)

– The rider now sits down on the motorcycle.
– Switch on the low beam.
– Check the headlight setting.

The boundary between light and dark must be exactly on the lower mark for a motorcycle with rider.

» If the boundary between light and dark does not meet specifications:
– Adjust the headlight range. (📖 p. 115)

15.11 Adjust the headlight range.

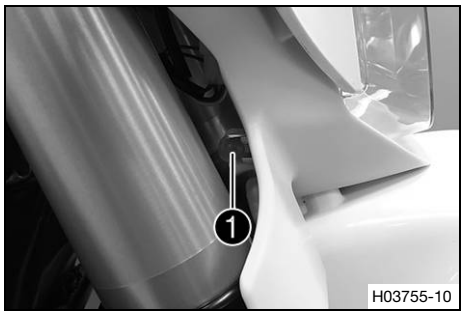

Preparatory work

– Check the headlight setting. (📖 p. 114)

Main work

– Loosen screw ❶.

– Adjust the headlight range by pivoting the headlight.

Guideline

The boundary between light and dark must be exactly on the lower mark for a motorcycle with rider (instructions on how to apply the mark: Checking the headlight setting).

Info

A change in weight on the vehicle may require a correction of the headlight range.

– Tighten screw ❶.

15.12 Changing the combination instrument battery

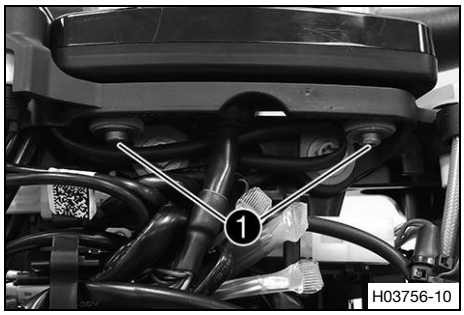

Preparatory work

– Remove the headlight mask with the headlight. (📖 p. 111)

Main work

– Remove screws ❶ with the washers.

– Pull the combination instrument upward out of the holder.

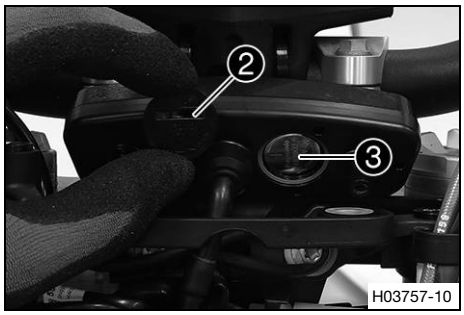

– Using a coin, turn protection cap ❷ all the way counterclockwise and take it off.

– Remove combination instrument battery ❸.

– Insert the combination instrument battery with the label facing outward.

Combination instrument battery (CR 2032) (📖 p. 145)

– Check the O-ring of the protection cap for correct seating.

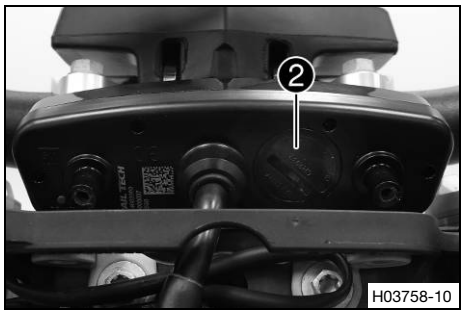

– Position protection cap ❷ and turn all the way clockwise using a coin.

– Press any button on the combination instrument.

✓ The combination instrument is activated.

– Position the combination instrument in the holder.

– Mount and tighten the screws with washers.

Finishing work

– Install the headlight mask with the headlight. (📖 p. 111)
– Check the headlight setting. (📖 p. 114)
– Set the combination instrument. (📖 p. 25)

15.13 Diagnostics connector

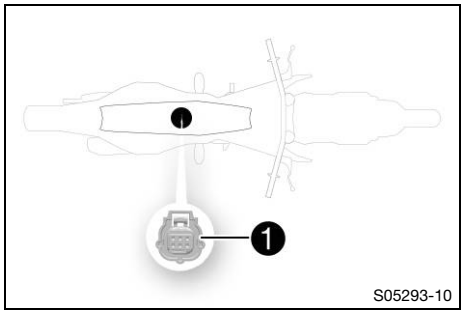

Diagnostics connector ❶ is located under the seat.

16.1 Cooling system

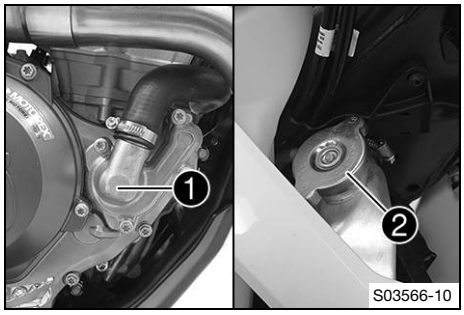

Water pump ❶ in the engine ensures forced circulation of the coolant.

The pressure resulting from the warming of the cooling system is regulated by a valve in radiator cap ❷. This ensures that operating the vehicle at the specified coolant temperature will not result in a risk of malfunctions.

120 °C (248 °F)

Cooling is effected by the air stream.

The lower the speed, the less the cooling effect. Dirty cooling fins also reduce the cooling effect.

Additional cooling is provided by the radiator fan, which is activated on a temperature-dependent basis.

16.2 Checking the antifreeze and coolant level

Warning

Danger of scalding During motorcycle operation, the coolant gets very hot and is under pressure.

- Do not open the radiator, the radiator hoses or other cooling system components if the engine or the cooling system are at operating temperature.
- Allow the cooling system and the engine to cool down before you open the radiator, the radiator hoses or other components of the cooling system.
- In the event of scalding, rinse the area affected immediately with lukewarm water.

Warning

Danger of poisoning Coolant is harmful to health.

- Keep coolant out of the reach of children.
- Do not allow coolant to come into contact with the skin, the eyes and clothing.
- Consult a doctor immediately if coolant is swallowed.
- Rinse the affected area immediately with plenty of water in the event of contact with the skin.
- Rinse eyes thoroughly with water and consult a doctor immediately if coolant gets into the eyes.
- Change clothing if coolant spills onto your clothing.

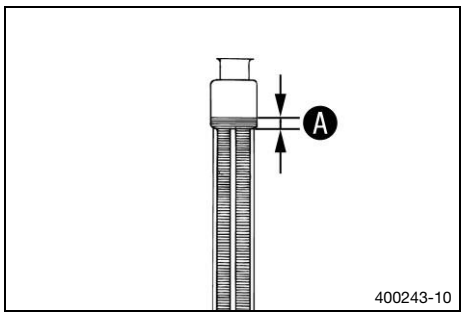

Condition

The engine is cold.

- Stand the motorcycle upright on a horizontal surface.
- Remove the radiator cap.
- Check the antifreeze in the coolant.

−25 … −45 °C (−13 … −49 °F)

  » If the antifreeze in the coolant does not match the specified value:
    - Correct the antifreeze in the coolant.
- Check the coolant level in the radiator.

Coolant level Ⓐ above the radiator fins	10 mm (0.39 in)

  » If the coolant level does not match the specified value:
    - Correct the coolant level.

Coolant (📖 p. 150)

– Mount the radiator cap.

16.3 Checking the coolant level

Warning

Danger of scalding During motorcycle operation, the coolant gets very hot and is under pressure.

– Do not open the radiator, the radiator hoses or other cooling system components if the engine or the cooling system are at operating temperature.
– Allow the cooling system and the engine to cool down before you open the radiator, the radiator hoses or other components of the cooling system.
– In the event of scalding, rinse the area affected immediately with lukewarm water.

Warning

Danger of poisoning Coolant is harmful to health.

– Keep coolant out of the reach of children.
– Do not allow coolant to come into contact with the skin, the eyes and clothing.
– Consult a doctor immediately if coolant is swallowed.
– Rinse the affected area immediately with plenty of water in the event of contact with the skin.
– Rinse eyes thoroughly with water and consult a doctor immediately if coolant gets into the eyes.
– Change clothing if coolant spills onto your clothing.

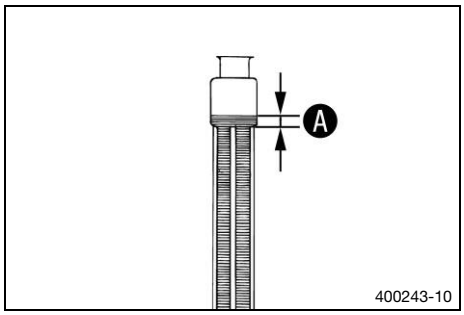

Condition

The engine is cold.

– Stand the motorcycle upright on a horizontal surface.
– Remove the radiator cap.
– Check the coolant level in the radiator.

Coolant level A above the radiator fins	10 mm (0.39 in)

» If the coolant level does not match the specified value:
– Correct the coolant level.

Coolant (📖 p. 150)

– Mount the radiator cap.

16.4 Draining the coolant

Warning

Danger of scalding During motorcycle operation, the coolant gets very hot and is under pressure.

– Do not open the radiator, the radiator hoses or other cooling system components if the engine or the cooling system are at operating temperature.
– Allow the cooling system and the engine to cool down before you open the radiator, the radiator hoses or other components of the cooling system.
– In the event of scalding, rinse the area affected immediately with lukewarm water.

Warning

Danger of poisoning Coolant is harmful to health.

- Keep coolant out of the reach of children.
- Do not allow coolant to come into contact with the skin, the eyes and clothing.
- Consult a doctor immediately if coolant is swallowed.
- Rinse the affected area immediately with plenty of water in the event of contact with the skin.
- Rinse eyes thoroughly with water and consult a doctor immediately if coolant gets into the eyes.
- Change clothing if coolant spills onto your clothing.

Condition

The engine is cold.

Preparatory work

- Remove the engine guard. (p. 85)

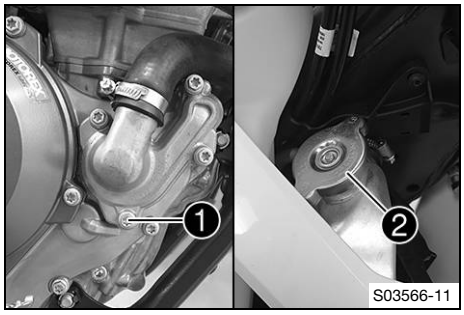

Main work

- Position the motorcycle upright.
- Place an appropriate container under the water pump cover.
- Remove screw 1. Take off radiator cap 2.
- Completely drain the coolant.
- Mount and tighten screw 1 with a new seal ring.

  Guideline

Screw, water pump cover	M6	10 Nm (7.4 lbf ft)

16.5 Refilling with coolant

Warning

Danger of poisoning Coolant is harmful to health.

- Keep coolant out of the reach of children.
- Do not allow coolant to come into contact with the skin, the eyes and clothing.
- Consult a doctor immediately if coolant is swallowed.
- Rinse the affected area immediately with plenty of water in the event of contact with the skin.
- Rinse eyes thoroughly with water and consult a doctor immediately if coolant gets into the eyes.
- Change clothing if coolant spills onto your clothing.

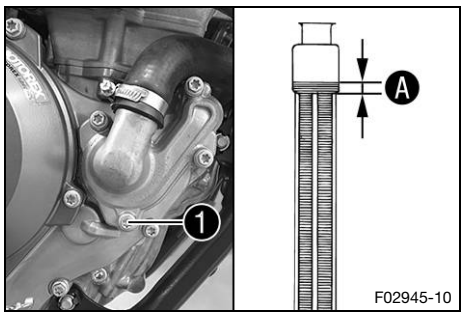

Main work

- Make sure that screw 1 is tightened.
- Position the motorcycle upright.
- Pour coolant in up to measurement A above the radiator fins.

  Guideline

10 mm (0.39 in)

Coolant	1.2 l (1.3 qt.)	Coolant (p. 150)

- Mount the radiator cap.

Finishing work

- Install the engine guard. (p. 86)
- Go for a short test ride.

– Check the coolant level. (p. 118)

16.6 Changing the coolant

Warning

Danger of scalding During motorcycle operation, the coolant gets very hot and is under pressure.

– Do not open the radiator, the radiator hoses or other cooling system components if the engine or the cooling system are at operating temperature.
– Allow the cooling system and the engine to cool down before you open the radiator, the radiator hoses or other components of the cooling system.
– In the event of scalding, rinse the area affected immediately with lukewarm water.

Warning

Danger of poisoning Coolant is harmful to health.

– Keep coolant out of the reach of children.
– Do not allow coolant to come into contact with the skin, the eyes and clothing.
– Consult a doctor immediately if coolant is swallowed.
– Rinse the affected area immediately with plenty of water in the event of contact with the skin.
– Rinse eyes thoroughly with water and consult a doctor immediately if coolant gets into the eyes.
– Change clothing if coolant spills onto your clothing.

Condition

The engine is cold.

Preparatory work

– Remove the engine guard. (p. 85)

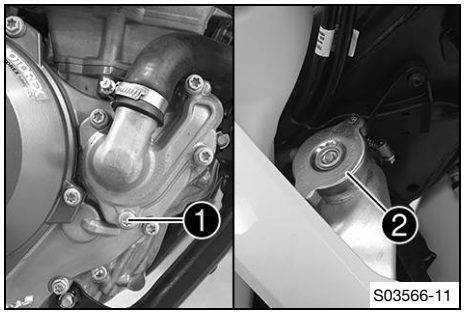

Main work

– Position the motorcycle upright.
– Place an appropriate container under the water pump cover.
– Remove screw ❶. Take off radiator cap ❷.
– Completely drain the coolant.
– Mount and tighten screw ❶ with a new seal ring.

Guideline

Screw, water pump cover	M6	10 Nm (7.4 lbf ft)

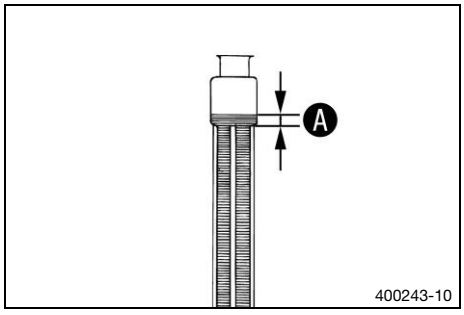

– Pour coolant in up to level Ⓐ above the radiator fins.

Guideline

10 mm (0.39 in)

Coolant	1.2 l (1.3 qt.)	Coolant (p. 150)

– Mount the radiator cap.

Finishing work

– Install the engine guard. (p. 86)
– Go for a short test ride.
– Check the coolant level. (p. 118)

17.1 Checking the play in the throttle cable

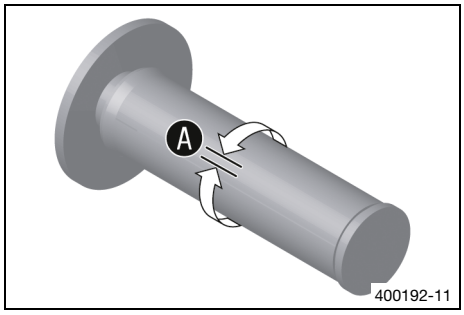

– Check the throttle grip for smooth operation.
– Move the handlebar to the straight-ahead position. Turn the throttle grip back and forth slightly and determine the play in throttle cable Ⓐ.

Play in throttle cable	3 … 5 mm (0.12 … 0.2 in)

» If the throttle cable play does not meet the specified value:
– Adjust the play in the throttle cable. 🔧 (📖 p. 121)

– Push the cold start button in all the way.

When the throttle grip is turned forward, the cold start button returns to its original position.

» If the cold start button does not return to its original position:
– Adjust the play in the throttle cable. 🔧 (📖 p. 121)

Danger
Danger of poisoning Exhaust gases are toxic and inhaling them may result in unconsciousness and death.
– Always make sure there is sufficient ventilation when running the engine.
– Use effective exhaust extraction when starting or running the engine in an enclosed space.

– Start the engine and let it run at idle speed. Move the handlebar to and fro over the entire steering range.

The idle speed must not change.

» If the idle speed changes:
– Adjust the play in the throttle cable. 🔧 (📖 p. 121)

17.2 Adjusting the play in the throttle cable 🔧

Info
If the correct routing of the throttle cables has already been secured, the fuel tank does not need to be removed.

Preparatory work
– Remove the air filter box cover. (📖 p. 67)
– Remove the seat. (📖 p. 65)
– Remove the right side cover. (📖 p. 69)
– Remove the fuel tank. 🔧 (📖 p. 72)
– Check the throttle cable routing. (📖 p. 81)

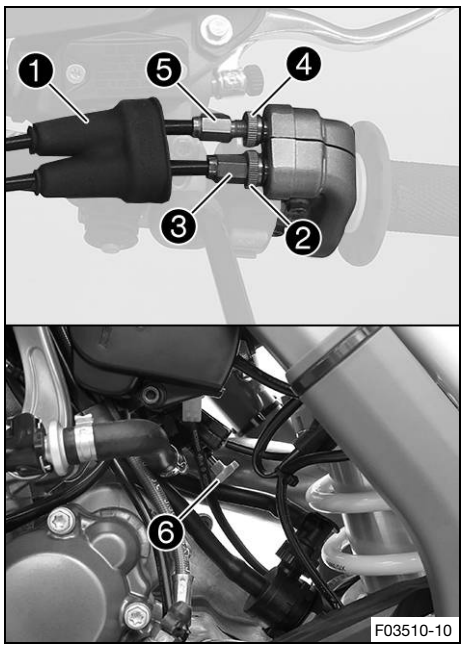

Main work

- Move the handlebar to the straight-ahead position.
- Push back sleeve ❶.
- Loosen nut ❷.
- Turn adjusting screw ❸ in as far as possible.
- Loosen nut ❹.
- Push cold start button ❻ all the way to the stop.
- Turn adjusting screw ❺ so that the cold start button moves to the basic position when the throttle grip is turned to the front.
- Tighten nut ❹.
- Turn adjusting screw ❸ so that there is play in the throttle cable at the throttle grip.

  Guideline

Play in throttle cable	3 … 5 mm (0.12 … 0.2 in)

- Tighten nut ❷.
- Slide on sleeve ❶.
- Check the throttle grip for smooth operation.

Finishing work

- Check the play in the throttle cable. (📖 p. 121)

17.3 Adjusting the characteristic map of the throttle response

Info

On the throttle grip, the characteristic map of the throttle response is changed by changing the guide plate.
A guide plate with a different characteristic map is supplied.

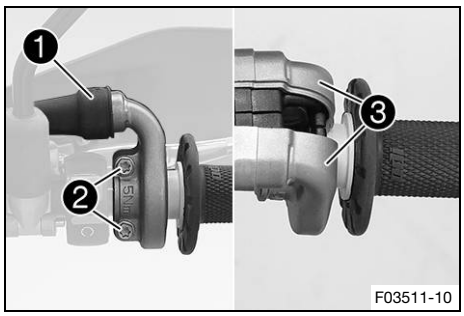

Main work

- Push back sleeve ❶.
- Remove screws ❷ and half-shells ❸.
- Detach the throttle cables and take off the grip tube.

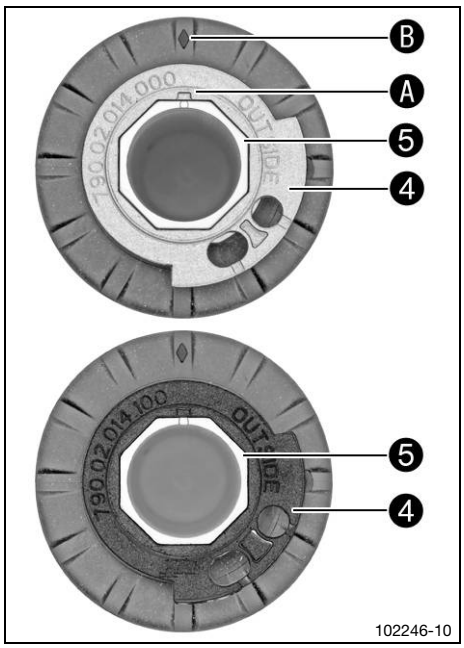

– Remove guide plate ❹ from handle tube ❺.
– Position the required guide plate on the grip tube.

Guideline

The label **OUTSIDE** must be visible. Marking Ⓐ must be positioned at marking Ⓑ.

Grey guide plate (79002014000)

Alternative 1

Black guide plate (79002014100)

Info

The gray guide plate opens the throttle valve more slowly.

The black guide plate opens the throttle valve more quickly.

The gray guide plate is mounted upon delivery.

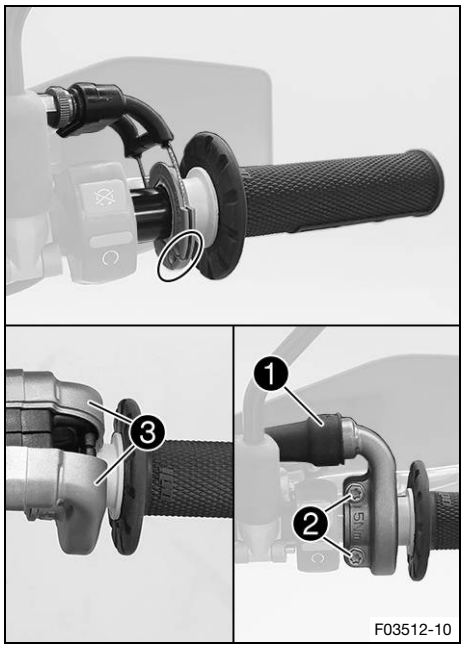

– Clean the outside of the handlebar and the inside of the grip tube. Mount the grip tube on the handlebar.
– Attach the throttle cables to the guide plate and route correctly.
– Position half-shells ❸, mount and tighten screws ❷.

Guideline

Screw, throttle grip	M6	5 Nm (3.7 lbf ft)

– Slide on sleeve ❶ and check the throttle grip for ease of movement.

Finishing work

– Check the play in the throttle cable. (📖 p. 121)

17.4 Changing the mapping

Warning

Voiding of the government approval for road use and the insurance coverage If the combination switch is mounted, the vehicle's road permit, if any, expires.

– Only operate the vehicle in closed-off areas remote from public road traffic if the combination switch is installed.

Info

The desired engine characteristic can be activated via the **MAP** button on the combination switch.
The setting most recently selected is activated again when restarting.
The traction control can also be activated in each mapping using the **TC** button.
The mapping can also be changed during the ride.

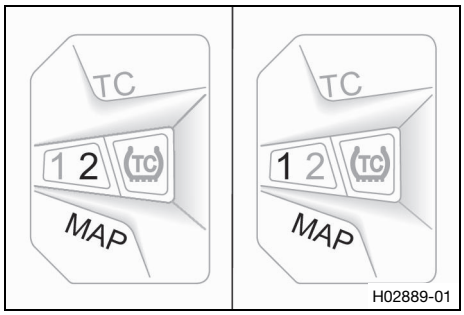

Activating STANDARD mapping:

– Press button **MAP** until LED **1** lights up.

Guideline

Engine speed	< 4,000 rpm

✓ STANDARD – balanced response

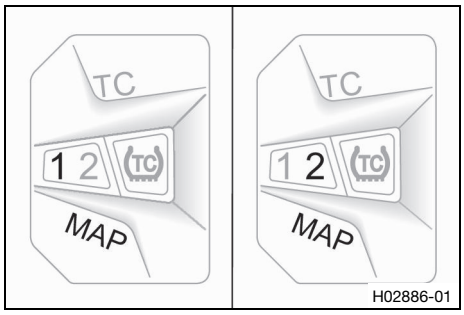

Activating ADVANCED mapping:

– Press button **MAP** until LED **2** lights up.

Guideline

Engine speed	< 4,000 rpm

✓ ADVANCED – direct response

17.5 Adjusting the idle speed

Warning

Danger of accidents The engine may go out spontaneously if the idle speed is set too low.

– Set the idle speed to the specified value. (Your authorized Husqvarna Motorcycles workshop will be glad to help.)

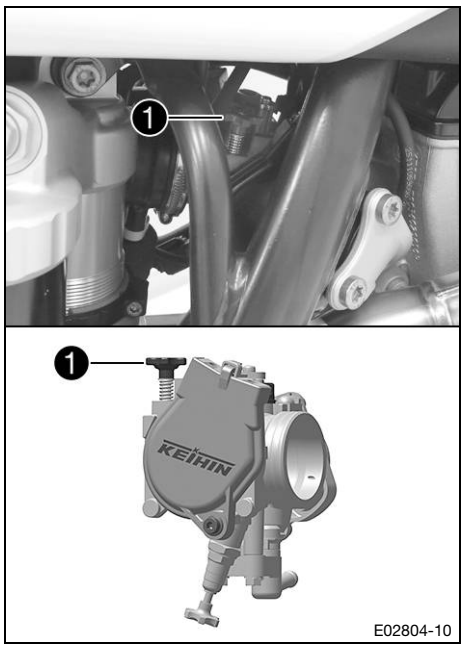

– Run the engine until warm.

✓ The cold start button is deactivated – The cold start button is in its basic position. (📖 p. 21)

Danger

Danger of poisoning Exhaust gases are toxic and inhaling them may result in unconsciousness and death.

– Always make sure there is sufficient ventilation when running the engine.
– Use effective exhaust extraction when starting or running the engine in an enclosed space.

– Set the idle speed by turning idle speed adjusting screw ❶.

Guideline

Idle speed	2,050 … 2,150 rpm

Tachometer (45129075000)

Info

Turning counterclockwise lowers the idle speed.
Turning clockwise raises the idle speed.

17.6 Programming the throttle valve position

Info

If the control unit detects that the throttle valve position at idle speed needs to be reprogrammed, then the malfunction indicator lamp flashes 2x per second.

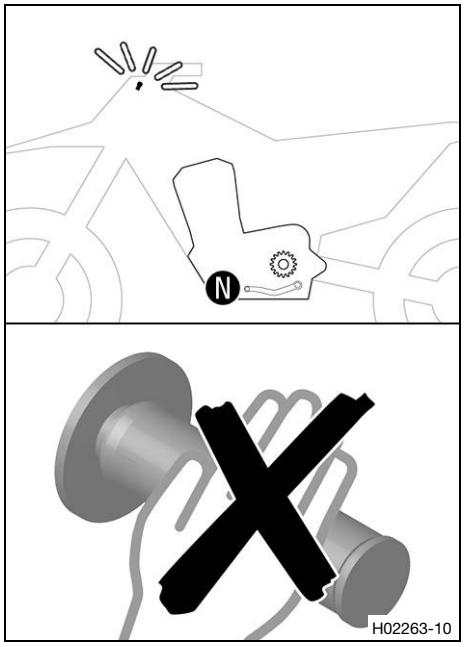

Danger

Danger of poisoning Exhaust gases are toxic and inhaling them may result in unconsciousness and death.

– Always make sure there is sufficient ventilation when running the engine.
– Use effective exhaust extraction when starting or running the engine in an enclosed space.

– Allow the vehicle to run at idle speed.

✓ The malfunction indicator lamp stops flashing once programming is completed.

Info

If the engine becomes too warm, perform a cool-down ride at medium speed.
After this, do not switch off the engine, but leave it running at idle speed until the programming is finished.

17.7 Checking the basic position of the shift lever

Info
When driving, the shift lever must not touch the rider's boot when in the basic position.
When the shift lever keeps touching the boot, the transmission will be subject to an excessive load.

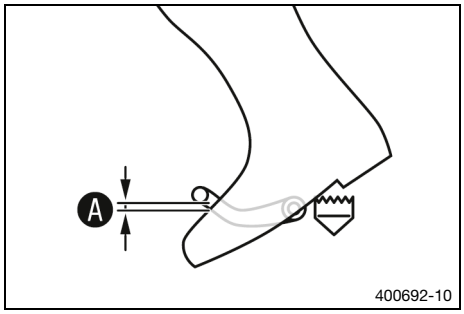

– Sit on the vehicle in the riding position and determine distance Ⓐ between the upper edge of your boot and the shift lever.

Gap between the shift lever and the top of the boot	10 … 20 mm (0.39 … 0.79 in)

» If the distance does not meet specifications:
– Adjust the basic position of the shift lever. (📖 p. 126)

17.8 Adjusting the basic position of the shift lever

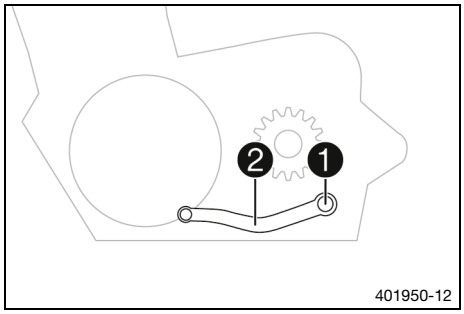

– Remove screw ❶ with the washers and take off shift lever ❷.

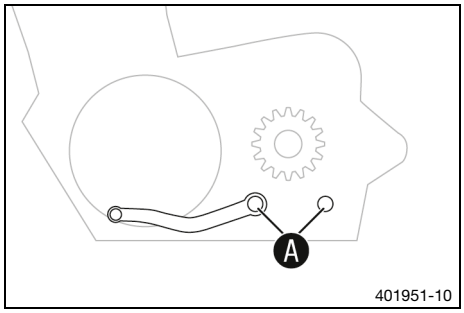

– Clean gear teeth Ⓐ of the shift lever and shift shaft.
– Mount the shift lever on the shift shaft in the required position and engage gearing.

Info
The range of adjustment is limited.
The shift lever must not come into contact with any other vehicle components during the shift procedure.

– Mount and tighten screw ❶ with washers.

Guideline

Screw, shift lever	M6	14 Nm (10.3 lbf ft) **Loctite®243™**

18.1 Changing the fuel screen

Danger

Fire hazard Fuel is highly flammable.

The fuel in the fuel tank expands when warm and can escape if overfilled.

- Do not fuel the vehicle in the vicinity of open flames or lit cigarettes.
- Switch off the engine for refueling.
- Make sure that no fuel is spilled; particularly not on hot parts of the vehicle.
- If any fuel is spilled, wipe it off immediately.
- Observe the specifications for refueling.

Warning

Danger of poisoning Fuel is poisonous and a health hazard.

- Avoid skin, eye and clothing contact with fuel.
- Immediately consult a doctor if you swallow fuel.
- Do not inhale fuel vapors.
- In case of skin contact, rinse the affected area with plenty of water.
- Rinse the eyes thoroughly with water, and consult a doctor in case of fuel contact with the eyes.
- Change your clothing in case of fuel spills on them.

Note

Environmental hazard Improper handling of fuel is a danger to the environment.

- Do not allow fuel to enter the groundwater, the soil, or the sewage system.

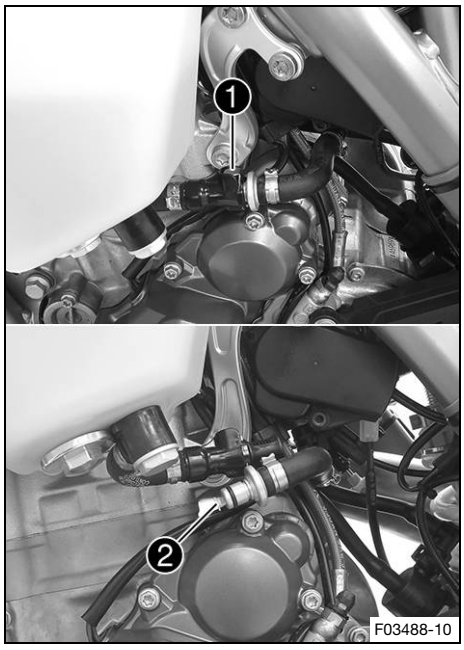

- Clean quick release coupling ❶ thoroughly with compressed air.

Info

Under no circumstances should dirt enter into the fuel line. Dirt in the fuel line clogs the injection valve!

- Disconnect the quick release coupling.

Info

Remaining fuel may flow out of the fuel hose.

- Pull fuel screen ❷ out of the connecting piece.
- Insert the new fuel screen all the way into the connecting piece.
- Spray silicone spray onto a lint-free cleaning cloth and lightly lubricate the O-ring of the quick-release coupling.

Silicone spray (📖 p. 152)

- Join the quick release coupling.

Danger

Danger of poisoning Exhaust gases are toxic and inhaling them may result in unconsciousness and death.

– Always make sure there is sufficient ventilation when running the engine.
– Use effective exhaust extraction when starting or running the engine in an enclosed space.

– Start the engine and check the response.

18.2 Checking the engine oil level

Preparatory work

– Stand the motorcycle upright on a horizontal surface.

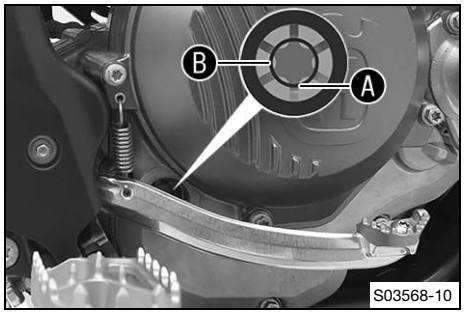

Condition

The engine is cold.

– Check the engine oil level.

The engine oil reaches the lower edge of level viewer Ⓐ.

» If the engine oil does not reach the lower edge of the level viewer:
– Add engine oil. (📖 p. 131)

Condition

The engine is at operating temperature.

– Check the engine oil level.

Info

After switching off the engine, wait one minute before checking the level.

The engine oil is at a level between lower edge Ⓐ and middle Ⓑ of the level viewer.

» If the engine oil is not at a level between lower edge Ⓐ and middle Ⓑ of the level viewer:
– Add engine oil. (📖 p. 131)

18.3 Changing the engine oil and oil filter, cleaning the oil screen

Warning

Danger of scalding Engine and gear oil get very hot when the motorcycle is ridden.

– Wear suitable protective clothing and safety gloves.
– In the event of scalding, rinse the area affected immediately with lukewarm water.

Note

Environmental hazard Hazardous substances cause environmental damage.

– Dispose of oils, grease, filters, fuel, cleaning agents, brake fluid, etc., correctly and in compliance with the applicable regulations.

Info
Drain the engine oil with the engine at operating temperature.

Preparatory work
- Park the motorcycle on a level surface.
- Remove the engine guard. (p. 85)

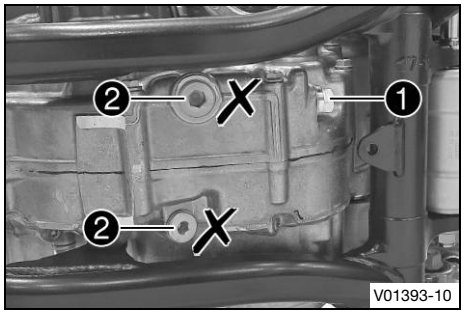

Main work
- Position an appropriate container under the engine.
- Remove oil drain plug ❶ with the magnet and seal ring.

Info
Do not remove screws ❷.

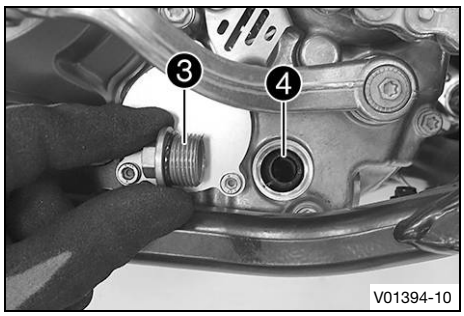

- Remove screw plug ❸ with oil screen ❹ and the O-rings.
- Allow the engine oil to drain completely.
- Thoroughly clean the parts and the sealing surfaces.

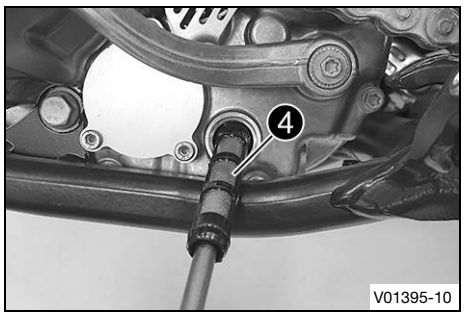

- Position oil screen ❹ with the O-rings on a pin wrench.
- Position the pin wrench through the drill hole of the screw plug in the opposite section of the engine case.
- Push the oil screen all the way into the engine case.

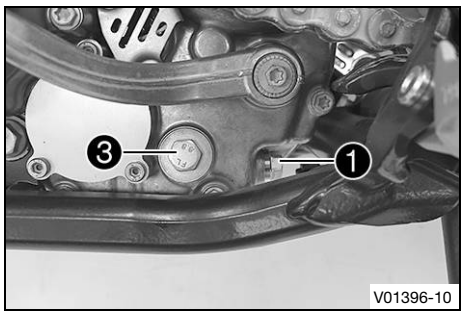

- Mount and tighten screw plug ❸ with the O-ring.

  Guideline

Screw plug, oil screen	M20x1.5	15 Nm (11.1 lbf ft)

- Mount and tighten oil drain plug ❶ with the magnet and a new seal ring.

  Guideline

Oil drain plug with magnet	M12x1.5	20 Nm (14.8 lbf ft)

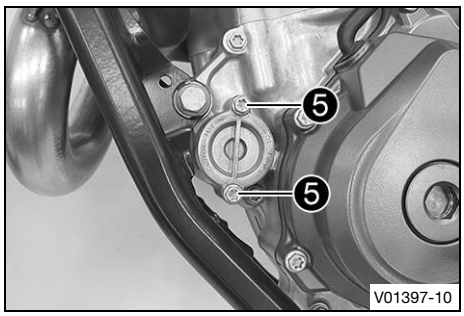

– Remove screws ❺. Take off the oil filter cover with the O-ring.

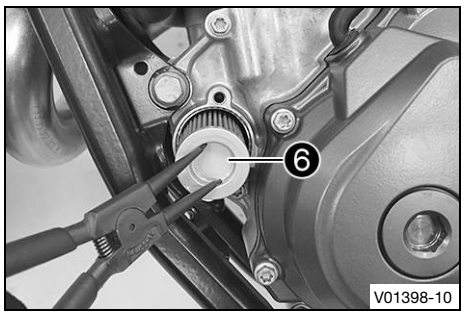

– Pull oil filter ❻ out of the oil filter housing.

Lock ring plier (51012011000)

– Allow the engine oil to drain completely.
– Thoroughly clean the parts and the sealing surface.

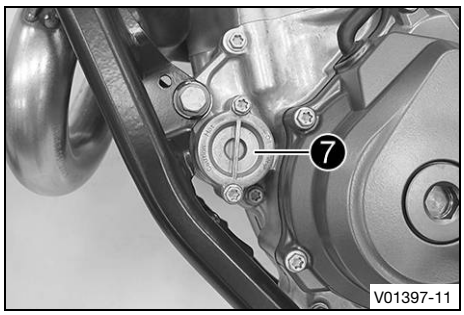

– Lay the motorcycle on its side and fill the oil filter housing to about ⅓ full with engine oil.
– Place the oil filter into the oil filter housing.
– Oil the O-ring of the oil filter cover and mount it together with oil filter cover ❼.
– Mount and tighten the screws.

Guideline

Screw, oil filter cover	M6	10 Nm (7.4 lbf ft)

– Stand the motorcycle upright.

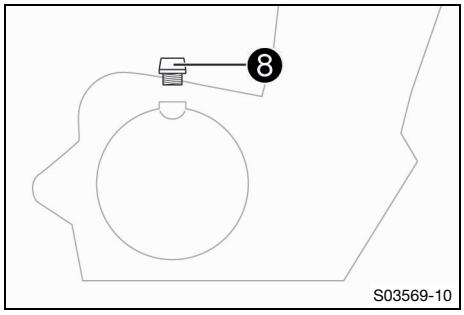

– Remove filler plug ❽ with the O-ring, and fill up with engine oil.

Engine oil	1.0 l (1.1 qt.)	Engine oil (SAE 10W/50) (📖 p. 150)

Info
Too little engine oil or poor-quality engine oil will result in premature wear of the engine.

– Mount and tighten the filler plug together with the O-ring.

Danger
Danger of poisoning Exhaust gases are toxic and inhaling them may result in unconsciousness and death.
– Always make sure there is sufficient ventilation when running the engine.
– Use effective exhaust extraction when starting or running the engine in an enclosed space.

– Start the engine and check it for leaks.

Finishing work

– Check the engine oil level. (📖 p. 128)

– Install the engine guard. (📖 p. 86)

18.4 Adding engine oil

Info

Too little engine oil or poor-quality engine oil will result in premature wear of the engine.

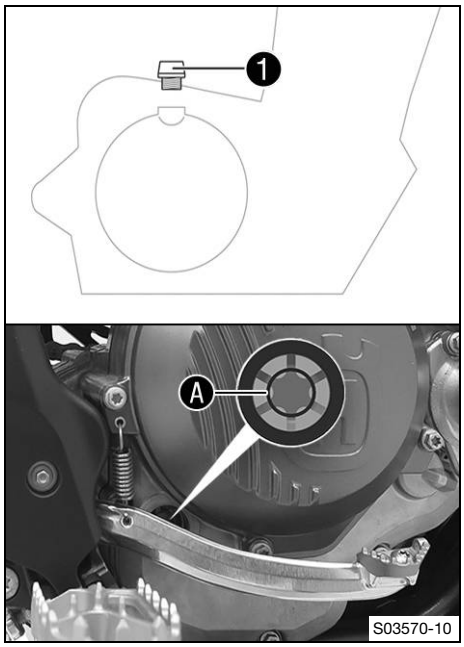

Main work

– Remove filler plug ❶ with the O-ring.

– Fill engine oil to the middle Ⓐ of the level viewer.

Engine oil (SAE 10W/50) (📖 p. 150)

Info

In order to achieve optimal engine oil performance, it is not advisable to mix different engine oils.

Husqvarna Motorcycles recommends changing the engine oil.

– Mount and tighten the filler plug together with the O-ring.

Danger

Danger of poisoning Exhaust gases are toxic and inhaling them may result in unconsciousness and death.

– Always make sure there is sufficient ventilation when running the engine.

– Use effective exhaust extraction when starting or running the engine in an enclosed space.

– Start the engine and check for leaks.

Finishing work

– Check the engine oil level. (📖 p. 128)

19.1 Cleaning the motorcycle

Note

Material damage Components become damaged or destroyed if a pressure cleaner is used incorrectly.

The high pressure forces water into the electrical components, connectors, throttle cables, and bearings, etc.

Pressure which is too high causes malfunctions and destroys components.

– Do not direct the water jet directly on to electrical components, connectors, throttle cables or bearings.
– Maintain a minimum distance between the nozzle of the pressure cleaner and the component.

Minimum clearance	60 cm (23.6 in)

Note

Environmental hazard Hazardous substances cause environmental damage.

– Dispose of oils, grease, filters, fuel, cleaning agents, brake fluid, etc., correctly and in compliance with the applicable regulations.

Info

To maintain the value and appearance of the motorcycle over a long period, clean it regularly.
Avoid direct sunshine when cleaning the motorcycle.

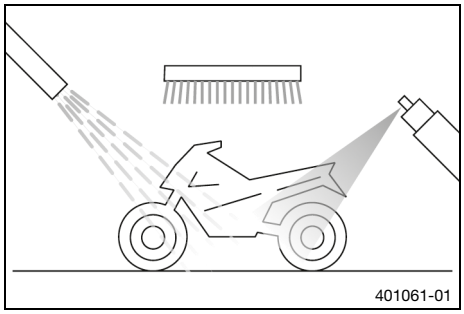

– Close off the exhaust system to keep water from entering.
– Remove the coarse dirt particles with a gentle water jet.
– Spray the heavily soiled parts with a normal commercial motorcycle cleaner and clean using a brush.

Info

Use warm water containing normal motorcycle cleaner and a soft sponge.
Never apply motorcycle cleaner to a dry vehicle; always rinse the vehicle with water first.

– After rinsing the motorcycle with a gentle spray of water, allow it to dry thoroughly.
– Remove the closure of the exhaust system.

Warning

Danger of accidents Moisture and dirt impair the brake system.

– Brake carefully several times to dry out and remove dirt from the brake linings and the brake discs.

– After cleaning, ride the vehicle a short distance until the engine warms up.

Info

The heat produced causes water at inaccessible locations in the engine and on the brake system to evaporate.

– After the motorcycle has cooled down, lubricate all moving parts and pivot points.
– Clean the chain. (p. 76)

– Treat bare metal (except for brake discs and the exhaust system) with a corrosion inhibitor.

Preserving materials for paints, metal and rubber (📖 p. 152)

– Treat all plastic parts and powder-coated parts with a mild cleaning and care product.

Special cleaner for glossy and matte paint finishes, metal and plastic surfaces (📖 p. 152)

(EU)

– Lubricate the steering lock.

Universal oil spray (📖 p. 153)

19.2 Checks and maintenance steps for winter operation

Info

If you use the vehicle in winter, you must expect salt on the roads. You should therefore take precautions against aggressive road salt.

If the vehicle was operated in road salt, clean it with cold water after riding. Warm water would enhance the corrosive effects of salt.

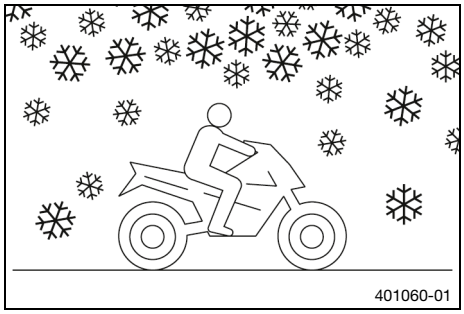

– Clean the motorcycle. (📖 p. 132)
– Clean brake system.

Info

After **EVERY** trip on salted roads, thoroughly clean the brake calipers and brake linings, after they have cooled down and without removing them, with cold water and dry them carefully.

After riding on salted roads, thoroughly clean the vehicle with cold water and dry it well.

– Treat the engine, link fork, and all other bare or zinc-plated parts (except the brake discs) with a wax-based corrosion inhibitor.

Info

Corrosion inhibitor must not come in contact with the brake discs as this would greatly reduce the braking force.

– Clean the chain. (📖 p. 76)

20.1 Storage

Warning

Danger of poisoning Fuel is poisonous and a health hazard.

- Avoid skin, eye and clothing contact with fuel.
- Immediately consult a doctor if you swallow fuel.
- Do not inhale fuel vapors.
- In case of skin contact, rinse the affected area with plenty of water.
- Rinse the eyes thoroughly with water, and consult a doctor in case of fuel contact with the eyes.
- Change your clothing in case of fuel spills on them.
- Keep fuels correctly in a suitable canister, and out of the reach of children.

Info

If you plan to garage the motorcycle for a longer period, perform the following steps or have them performed.

Before storing the motorcycle, check all parts for function and wear. If service, repairs, or replacements are necessary, you should do this during the storage period (less workshop overload). In this way, you can avoid long workshop waiting times at the start of the new season.

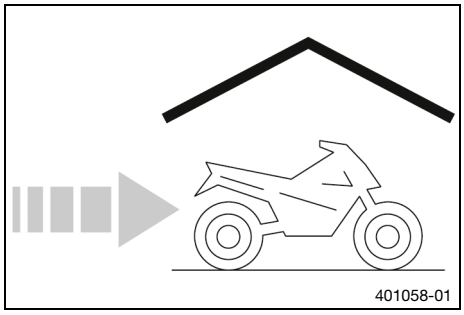

- When refueling for the last time before taking the motorcycle out of service, add fuel additive.
- Refuel. (p. 39)
- Clean the motorcycle. (p. 132)
- Change the engine oil and oil filter, clean the oil screen. (p. 128)
- Check the antifreeze and coolant level. (p. 117)
- Check the tire pressure. (p. 102)
- Remove the 12-V battery. (p. 104)
- Charge the 12-V battery. (p. 107)

  Guideline

Ideal charging and storage temperature of the lithium-ion battery	10 … 20 °C (50 … 68 °F)

- Store the vehicle in a dry location that is not subject to large fluctuations in temperature.

Info

Husqvarna Motorcycles recommends raising the motorcycle.

- Raise the motorcycle with a lift stand. (p. 53)
- Preferably cover the motorcycle with a tarp or similar cover that is permeable to air. Do not use non-porous materials since they prevent humidity from escaping, thus causing corrosion.

Info

Avoid running the engine for a short time only. Since the engine cannot warm up properly, the water vapor produced during combustion condenses and causes valves and the exhaust system to rust.

20.2 Preparing for use after storage

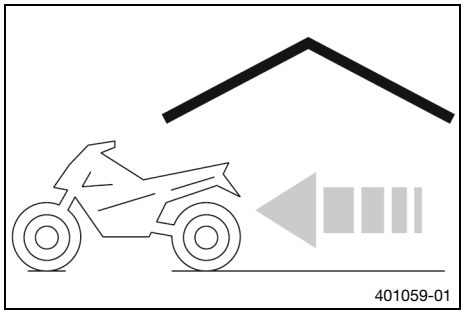

- Remove the motorcycle from the lift stand. (📖 p. 53)
- Install the 12-V battery. 🔧 (📖 p. 105)
- Perform checks and maintenance measures when preparing for use. (📖 p. 35)
- Take a test ride.

Faults	Possible cause	Action
The engine cannot be cranked (starter motor)	Operating error	– Carry out start procedure. (📖 p. 35)
	12-V battery discharged	– Charge the 12-V battery. 🔧 (📖 p. 107) – Check charging voltage. 🔧 – Check the open-circuit current. 🔧 – Check the stator winding of the alternator. 🔧
	Main fuse blown	– Change the main fuse. (📖 p. 108)
	Starter relay defective	– Check the starter relay. 🔧
	Starter motor defective	– Check the starter motor. 🔧
The engine turns but does not start	Operating error	– Carry out start procedure. (📖 p. 35)
	Quick release coupling not joined	– Join quick release coupling.
	Fuse **1** blown	– Change the fuses of individual electrical power consumers. (📖 p. 109)
	Fuse **4** blown	– Change the fuses of individual electrical power consumers. (📖 p. 109)
	Idle speed is not set correctly	– Adjust the idle speed. 🔧 (📖 p. 124)
	Spark plug sooty or wet	– Clean and dry the spark plug and spark plug connector, or change if necessary.
	Plug gap of spark plug too wide	– Adjust plug gap. Guideline Spark plug electrode gap 1.0 mm (0.039 in)
	Ignition system defective	– Check the ignition system. 🔧
	Short-circuit cable in wiring harness frayed, stop button or emergency OFF switch faulty	– Check the wiring harness. (visual check) – Check the electrical system.
	Error in the electronic fuel injection	– Read out the fault memory using the Husqvarna Motorcycles diagnostics tool. 🔧
Engine does not speed up	Error in the electronic fuel injection	– Read out the fault memory using the Husqvarna Motorcycles diagnostics tool. 🔧
	Ignition system defective	– Ignition coil - check the secondary winding. 🔧 – Check the spark plug connector. 🔧 – Check the stator winding of the alternator. 🔧
Engine has too little power	Air filter heavily contaminated	– Clean the air filter and air filter box. 🔧 (📖 p. 68)
	Fuel filter is very dirty	– Change the fuel filter. 🔧
	Fuel screen is very dirty	– Change the fuel screen. 🔧 (📖 p. 127)
	Error in the electronic fuel injection	– Read out the fault memory using the Husqvarna Motorcycles diagnostics tool. 🔧
	Exhaust system leaky, deformed or too little glass fiber yarn filling in the main silencer	– Check exhaust system for damage. – Change the glass fiber yarn filling in the main silencer. 🔧 (📖 p. 71)

Faults	Possible cause	Action
Engine has too little power	Valve clearance too little	– Adjust the valve clearance. 🔧
	Ignition system defective	– Ignition coil - check the secondary winding. 🔧 – Check the spark plug connector. 🔧 – Check the stator winding of the alternator. 🔧
The engine dies during the trip	Lack of fuel	– Refuel. (📖 p. 39)
	Fuse **1** blown	– Change the fuses of individual electrical power consumers. (📖 p. 109)
	Fuse **4** blown	– Change the fuses of individual electrical power consumers. (📖 p. 109)
Engine overheats	Coolant level low in cooling system	– Check the cooling system for leaks. – Check the coolant level. (📖 p. 118)
	Insufficient airflow	– Switch off engine when stationary.
	Radiator fins very dirty	– Clean radiator fins.
	Foam formation in cooling system	– Drain the coolant. 🔧 (📖 p. 118) – Refill with coolant. 🔧 (📖 p. 119)
	Bent radiator hose	– Change the radiator hose. 🔧
	Thermostat defective	– Check the thermostat. 🔧 Guideline Opening temperature: 70 °C (158 °F)
	Defect in radiator fan system	– Check fuse **3**. – Check the radiator fan. 🔧
Malfunction indicator lamp lights up or flashes	Error in the electronic fuel injection	– Check wiring for damage and electrical plug-in connectors for corrosion and damage. – Read out the fault memory using the Husqvarna Motorcycles diagnostics tool. 🔧
High oil consumption	Engine vent hose bent	– Route the vent hose without bends or replace it if necessary.
	Engine oil level too high	– Check the engine oil level. (📖 p. 128)
	Engine oil too thin (low viscosity)	– Change the engine oil and oil filter, clean the oil screen. 🔧 (📖 p. 128)
	Piston and cylinder worn	– Measure the piston/cylinder mounting clearance. 🔧
12-V battery discharged	The 12-V battery is not being charged by the alternator	– Check charging voltage. 🔧 – Check the stator winding of the alternator. 🔧
	Unwanted electrical power consumer	– Check the open-circuit current. 🔧
Combination instrument values deleted (time, stop watch, lap times)	The combination instrument battery is empty	– Change combination instrument battery. (📖 p. 115)
The high beam, low beam, tail light, position light, and license plate lamp are not working	Fuse **2** blown	– Change the fuses of individual electrical power consumers. (📖 p. 109)

Faults	Possible cause	Action
The horn, brake light, turn signal, and radiator fan are not working	Fuse **3** blown	– Change the fuses of individual electrical power consumers. (📖 p. 109)

Info
The blink codes are only displayed by the derestricted version of the vehicle.

Blink code for malfunction indicator lamp	 02a Malfunction indicator lamp flashes 2x per second
Error level condition	Throttle valve position programming necessary

Blink code for malfunction indicator lamp	 02 Malfunction indicator lamp flashes 2x short
Error level condition	Crankshaft speed sensor – circuit fault

Blink code for malfunction indicator lamp	 06 Malfunction indicator lamp flashes 6x short
Error level condition	Throttle valve position sensor circuit A – input signal too low
	Throttle valve position sensor circuit A – input signal too high

Blink code for malfunction indicator lamp	 09 Malfunction indicator lamp flashes 9x short
Error level condition	Induction manifold pressure sensor, cylinder 1 – input signal too low
	Induction manifold pressure sensor cylinder 1 – input signal too high

Blink code for malfunction indicator lamp	 12 Malfunction indicator lamp flashes 1x long, 2x short
Error level condition	Coolant temperature sensor – input signal too low
	Coolant temperature sensor – input signal too high

Blink code for malfunction indicator lamp	 13 Malfunction indicator lamp flashes 1x long, 3x short
Error level condition	Intake air temperature sensor – input signal too low
	Intake air temperature sensor – input signal too high

Blink code for malfunction indicator lamp	 15 Malfunction indicator lamp flashes 1x long, 5x short
Error level condition	Tilt sensor – input signal too low
	Tilt sensor – input signal too high

Blink code for malfunction indicator lamp	 21 Malfunction indicator lamp flashes 2x long, 1x short
Error level condition	Battery voltage – input voltage too high

Blink code for malfunction indicator lamp	 22 Malfunction indicator lamp flashes 2x long, 2x short
Error level condition	Gear position sensor – input voltage too high
	Gear position sensor – input voltage too low

Blink code for malfunction indicator lamp	 33 Malfunction indicator lamp flashes 3x long, 3x short
Error level condition	Injector cylinder 1 - circuit fault

Blink code for malfunction indicator lamp	 37 Malfunction indicator lamp flashes 3x long, 7x short
Error level condition	Ignition coil 1, cylinder 1 - circuit fault

Blink code for malfunction indicator lamp	 41 Malfunction indicator lamp flashes 4x long, 1x short
Error level condition	Fuel pump relay - short circuit to ground or open circuit
	Fuel pump relay - input signal too low

23.1 Engine

Design	1-cylinder 4-stroke engine, water-cooled
Displacement	249.91 cm³ (15.2505 cu in)
Stroke	52.3 mm (2.059 in)
Bore	78 mm (3.07 in)
Compression ratio	13.8:1
Idle speed	2,050 … 2,150 rpm
Control	DOHC, four valves controlled via cam lever, drive via timing chain
Valve diameter, intake	32.5 mm (1.28 in)
Valve diameter, exhaust	26.5 mm (1.043 in)
Valve clearance	
Intake at: 20 °C (68 °F)	0.08 … 0.15 mm (0.0031 … 0.0059 in)
Exhaust at: 20 °C (68 °F)	0.12 … 0.19 mm (0.0047 … 0.0075 in)
Crankshaft bearing	2 cylinder bearings
Conrod bearing	Slide bearing
Piston pin bearing	Bearing bush
Pistons	Forged light alloy
Piston rings	1 compression ring, 1 oil scraper ring
Engine lubrication	Pressure circulation lubrication with 2 trochoidal pumps
Primary transmission	24:73
Clutch	Multidisc clutch in oil bath/hydraulically activated
Gearbox	6 gear transmission, claw shifted
Transmission ratio	
First gear	13:32
Second gear	16:30
Third gear	16:24
Fourth gear	23:28
Fifth gear	23:23
Sixth gear	26:20
Alternator	12 V, 200 W
Ignition	Contactless controlled fully electronic ignition with digital ignition adjustment
Spark plug	NGK LMAR9AI-10
Spark plug electrode gap	1.0 mm (0.039 in)
Cooling	Water cooling, permanent circulation of coolant by water pump
Starting aid	Starter motor

23.2 Engine tightening torques

Nozzle, crank chamber ventilation	M4	2 Nm (1.5 lbf ft) **Loctite®243™**
Oil nozzle for clutch lubrication	M4	2 Nm (1.5 lbf ft) **Loctite®243™**
Oil nozzle for conrod bearing lubrication	M4	2 Nm (1.5 lbf ft) **Loctite®243™**
Oil nozzle for main bearing lubrication	M4	2 Nm (1.5 lbf ft) **Loctite®243™**
Screw, hose clip, inlet sleeve	M4	3 Nm (2.2 lbf ft)
Screw, oil nozzle for piston cooling	M4	2.5 Nm (1.84 lbf ft) **Loctite®243™**
Locking screw for bearing	M5	6 Nm (4.4 lbf ft) **Loctite®243™**
Oil channel screw plug in alternator cover	M5	2 Nm (1.5 lbf ft) **Loctite®243™**
Oil nozzle for cam lever lubrication	M5	3 Nm (2.2 lbf ft) **Loctite®243™**
Oil nozzle, piston cooling	M5	2 Nm (1.5 lbf ft) **Loctite®243™**
Screw, bearing bolt, oil pump idler gear	M5	6 Nm (4.4 lbf ft) **Loctite®243™**
Screw, clutch spring retainer	M5	6 Nm (4.4 lbf ft)
Screw, crankshaft speed sensor	M5	6 Nm (4.4 lbf ft) **Loctite®243™**
Screw, gear position sensor	M5	5 Nm (3.7 lbf ft) **Loctite®243™**
Screw, locking lever	M5	6 Nm (4.4 lbf ft) **Loctite®243™**
Screw, oil pump cover	M5	6 Nm (4.4 lbf ft) **Loctite®243™**
Screw, stator	M5	6 Nm (4.4 lbf ft) **Loctite®2701™**
Nut, cylinder head	M6	10 Nm (7.4 lbf ft) Lubricated with engine oil
Nut, water pump impeller	M6	6 Nm (4.4 lbf ft) **Loctite®243™**
Screw, alternator cover	M6	10 Nm (7.4 lbf ft)
Screw, clutch cover	M6	10 Nm (7.4 lbf ft)
Screw, clutch slave cylinder	M6	10 Nm (7.4 lbf ft)
Screw, engine case	M6	10 Nm (7.4 lbf ft)
Screw, exhaust flange	M6	10 Nm (7.4 lbf ft) **Loctite®243™**
Screw, fuel vapor retention system connection	M6	5 Nm (3.7 lbf ft) **Loctite®2701™**
Screw, guide rail	M6	10 Nm (7.4 lbf ft) **Loctite®243™**
Screw, oil filter cover	M6	10 Nm (7.4 lbf ft)

Screw, shift drum locating	M6	10 Nm (7.4 lbf ft) **Loctite®243™**
Screw, shift lever	M6	14 Nm (10.3 lbf ft) **Loctite®243™**
Screw, starter motor	M6	10 Nm (7.4 lbf ft)
Screw, starter motor - intermediate gear	M6	10 Nm (7.4 lbf ft) **Loctite®243™**
Screw, timing chain failure protection	M6	10 Nm (7.4 lbf ft) **Loctite®243™**
Screw, valve cover	M6	8 Nm (5.9 lbf ft)
Screw, water pump cover	M6	10 Nm (7.4 lbf ft)
Stud, cylinder head	M6	10 Nm (7.4 lbf ft)
Screw, camshaft bearing bridge	M7x1	Tightening sequence: Tighten diagonally. 1st tightening stage 5 Nm (3.7 lbf ft) 2nd tightening stage 14 Nm (10.3 lbf ft) Lubricated with engine oil
Crankshaft clamp screw plug	M8	10 Nm (7.4 lbf ft)
Screw, tensioning rail	M8	15 Nm (11.1 lbf ft) **Loctite®243™**
Screw, engine sprocket	M10	60 Nm (44.3 lbf ft) **Loctite®243™**
Plug, oil channel	M10x1	15 Nm (11.1 lbf ft) **Loctite®243™**
Screw plug, cam lever axis	M10x1	10 Nm (7.4 lbf ft)
Screw, rotor	M10x1	70 Nm (51.6 lbf ft) Collar and thread oiled / cone degreased
Screw, unlocking of timing chain tensioner	M10x1	8 Nm (5.9 lbf ft)
Spark plug	M10x1	12 Nm (8.9 lbf ft)
Coolant temperature sensor	M10x1.25	12 Nm (8.9 lbf ft)
Nut, cylinder head	M10x1.25	Tightening sequence: Tighten diagonally. 1st tightening stage 10 Nm (7.4 lbf ft) 2nd tightening stage 30 Nm (22.1 lbf ft) 3rd tightening stage 180°
Stud, cylinder head	M10x1.25	20 Nm (14.8 lbf ft) **Loctite®243™**
Oil drain plug with magnet	M12x1.5	20 Nm (14.8 lbf ft)
Screw plug, oil pressure control valve	M12x1.5	20 Nm (14.8 lbf ft)
Oil drain plug	M14x1.5	15 Nm (11.1 lbf ft)
Nut, inner clutch hub	M18x1.5	100 Nm (73.8 lbf ft) **Loctite®243™**

Nut, primary gear wheel	M18LHx1.5	120 Nm (88.5 lbf ft) **Loctite®243™**
Screw plug, oil screen	M20x1.5	15 Nm (11.1 lbf ft)
Plug, timing chain tensioner	M24x1.5	40 Nm (29.5 lbf ft)
Screw, alternator cover	M24x1.5	18 Nm (13.3 lbf ft)

23.3 Capacities

23.3.1 Engine oil

Engine oil	1.0 l (1.1 qt.)	Engine oil (SAE 10W/50) (📖 p. 150)

23.3.2 Coolant

Coolant	1.2 l (1.3 qt.)	Coolant (📖 p. 150)

23.3.3 Fuel

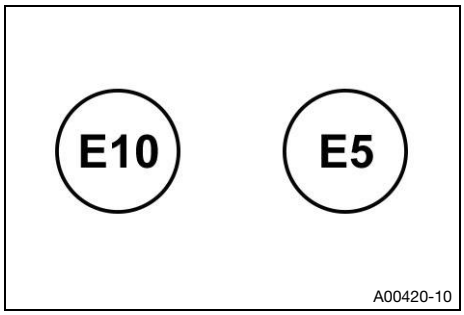

Please observe the labels on EU fuel pumps.

Super unleaded (ROZ 95) (📖 p. 151)	9.0 l (2.38 US gal)

Fuel reserve, approx.	1.5 l (1.6 qt.)

23.4 Chassis

Frame	Central tube frame made of chrome molybdenum steel tubing
Fork	**WPXPLOR 5548**
Suspension travel	
front	300 mm (11.81 in)
rear	300 mm (11.81 in)
Fork offset	22 mm (0.87 in)
Shock absorber	**WPXACT 5750**
Brake system	Disc brakes, floating brake calipers
Brake discs - diameter	
front	260 mm (10.24 in)
rear	220 mm (8.66 in)
Brake discs - wear limit	
front	2.5 mm (0.098 in)
rear	3.5 mm (0.138 in)
Offroad tire pressure	
front	1.0 bar (15 psi)

rear	1.0 bar (15 psi)
Street tire pressure	
front	1.5 bar (22 psi)
rear	1.8 bar (26 psi)
Final drive	14:52 (13:52)
Chain	5/8 x 1/4"
Rear sprockets available	45, 48, 49, 50, 51, 52
Steering head angle	63.5°
Wheelbase	1,487 ± 10 mm (58.54 ± 0.39 in)
Seat height unloaded	950 mm (37.4 in)
Ground clearance unloaded	360 mm (14.17 in)
Weight without fuel, approx.	108 kg (238 lb.)
Maximum permissible front axle load	145 kg (320 lb.)
Maximum permissible rear axle load	190 kg (419 lb.)
Maximum permissible overall weight	335 kg (739 lb.)

23.5 Electrical system

12-V battery	HJTZ5S-FP-C	Lithium-ion battery Battery voltage: 12 V Nominal capacity: 2.0 Ah Maintenance-free
Combination instrument battery	CR 2032	Battery voltage: 3 V
Fuse	75011088005	5 A
Fuse	75011088010	10 A
Fuse	58011109120	20 A
Headlight	HS1/socket PX43t	12 V 35/35 W
Position light	W5W / socket W2.1x9.5d	12 V 5 W
Indicator lamp (EU)	W2.3W / socket W2x4.6d	12 V 2.3 W
Turn signal (EU)	R10W / socket BA15s	12 V 10 W
Tail light	LED	
Brake light (EU)	LED	
License plate lamp (EU)	LED	

23.6 Tires

Front tire	**Rear tire**
90/90 - 21 M/C 54R M+S TT Michelin Enduro Medium	**140/80 - 18 M/C 70R M+S TT** Michelin Enduro Medium
The tires specified represent one of the possible series production tires. For alternative manufacturers, if any, contact an authorized dealer or qualified tire dealership. If local road approval regulations apply, these and the respective technical specifications must be observed. Additional information is available in the Service section under: www.husqvarna-motorcycles.com	

23.7 Fork

Fork article number	0266C169V401000
Fork	**WPXPLOR 5548**
Compression damping	
Comfort	18 clicks
Standard	15 clicks
Sport	12 clicks
Rebound damping	
Comfort	18 clicks
Standard	15 clicks
Sport	12 clicks
Spring preload – preload adjuster	
Comfort	**+0**
Standard	**+0**
Sport	**+3**
Spring length with preload spacer(s)	474 mm (18.66 in)
Spring rate	
Weight of rider: 65 … 75 kg (143 … 165 lb.)	4.4 N/mm (25.1 lb/in)
Weight of rider: 75 … 85 kg (165 … 187 lb.)	4.6 N/mm (26.3 lb/in)
Weight of rider: 85 … 95 kg (187 … 209 lb.)	4.8 N/mm (27.4 lb/in)
Fork length	928 mm (36.54 in)

Fork oil per fork leg	636 ± 10 ml (21.5 ± 0.34 fl. oz.)	Fork oil (SAE 4) (48601166S1) (📖 p. 151)

23.8 Shock absorber

Shock absorber article number	0266C469V408000
Shock absorber	**WPXACT 5750**
Lowspeed compression damping	
Comfort	17 clicks
Standard	15 clicks
Sport	13 clicks
Highspeed compression damping	
Comfort	2.5 turns
Standard	2 turns
Sport	1.5 turns
Rebound damping	
Comfort	17 clicks
Standard	15 clicks
Sport	13 clicks
Spring preload	12 mm (0.47 in)
Spring rate	
Weight of rider: 65 … 75 kg (143 … 165 lb.)	39 N/mm (223 lb/in)
Weight of rider: 75 … 85 kg (165 … 187 lb.)	42 N/mm (240 lb/in)
Weight of rider: 85 … 95 kg (187 … 209 lb.)	45 N/mm (257 lb/in)

Spring length	260 mm (10.24 in)
Gas pressure	10 bar (145 psi)
Static sag	37 mm (1.46 in)
Riding sag	110 mm (4.33 in)
Fitted length	477 mm (18.78 in)

Shock absorber oil	Shock absorber fluid (SAE 2.5) (50180751S1) (📖 p. 151)

23.9 Chassis tightening torques

Fitting, inlet sleeve to throttle valve body	-	2.8 Nm (2.07 lbf ft)
Hose clamp, radiator	-	2.4 Nm (1.77 lbf ft)
Remaining screws, chassis	**EJOT PT®** K60x25-Z	1 Nm (0.7 lbf ft)
Screw for spoiler attachment	**EJOT PT®** K60x23/18	2.5 Nm (1.84 lbf ft)
Screw, air filter box, on subframe	**EJOT PT®** K70x25	5 Nm (3.7 lbf ft)
Screw, combination switch	**EJOT PT®** K50x18	2 Nm (1.5 lbf ft)
Screw, fuel pump	**EJOT PT®** K60x25-Z	2.5 Nm (1.84 lbf ft)
Screw, intake air temperature sensor	**EJOT PT®** K50x18	0.7 Nm (0.52 lbf ft)
Screw, pressure regulator	**EJOT PT®** K60x25-Z	2.3 Nm (1.7 lbf ft)
Screw, start button	M3	0.4 Nm (0.3 lbf ft)
Screw, emergency OFF switch (EU)	M4	0.4 Nm (0.3 lbf ft)
Screw, fixed grip	M4	5 Nm (3.7 lbf ft) **Loctite®243™**
Spoke nipple, front wheel	M4.5	6 Nm (4.4 lbf ft)
Spoke nipple, rear wheel	M4.5	6 Nm (4.4 lbf ft)
Remaining nuts, chassis	M5	5 Nm (3.7 lbf ft)
Remaining screws, chassis	M5	5 Nm (3.7 lbf ft)
Screw, battery terminal	M5	2.5 Nm (1.84 lbf ft)
Screw, brake line guide on link fork	M5	5 Nm (3.7 lbf ft)
Screw, frame protector	M5	3 Nm (2.2 lbf ft)
Screw, ground wire in tail section	M5	5 Nm (3.7 lbf ft)
Screw, shock absorber adjusting ring	M5	5 Nm (3.7 lbf ft)
Screw, throttle valve body cover	M5	2.6 Nm (1.92 lbf ft)
Screws on main silencer	M5	7 Nm (5.2 lbf ft)
Nut, starter motor	M6	4 Nm (3 lbf ft)
Nut, throttle cable on throttle valve body	M6	3 Nm (2.2 lbf ft)
Remaining nuts, chassis	M6	10 Nm (7.4 lbf ft)
Remaining screws, chassis	M6	10 Nm (7.4 lbf ft)
Screw, ball joint of push rod on foot brake cylinder	M6	10 Nm (7.4 lbf ft) **Loctite®243™**
Screw, battery support bracket	M6	6 Nm (4.4 lbf ft)

Screw, brake lever	M6	5 Nm (3.7 lbf ft)
Screw, cable on starter relay	M6	6 Nm (4.4 lbf ft)
Screw, chain guide on link fork	M6	10 Nm (7.4 lbf ft)
Screw, chain sliding guard	M6	10 Nm (7.4 lbf ft) **Loctite®243™**
Screw, clutch lever	M6	5 Nm (3.7 lbf ft)
Screw, front brake disc	M6	14 Nm (10.3 lbf ft) **Loctite®243™**
Screw, rear brake disc	M6	14 Nm (10.3 lbf ft) **Loctite®243™**
Screw, rear seat fixing	M6	10 Nm (7.4 lbf ft)
Screw, throttle grip	M6	5 Nm (3.7 lbf ft)
Fuel connection on fuel pump	M8	15 Nm (11.1 lbf ft)
Nut, foot brake lever stop	M8	20 Nm (14.8 lbf ft)
Nut, rear sprocket screw	M8	35 Nm (25.8 lbf ft) **Loctite®2701™**
Nut, rim lock	M8	12 Nm (8.9 lbf ft)
Remaining nuts, chassis	M8	25 Nm (18.4 lbf ft)
Remaining screws, chassis	M8	25 Nm (18.4 lbf ft)
Screw, bottom triple clamp	M8	15 Nm (11.1 lbf ft)
Screw, chain sliding piece	M8	15 Nm (11.1 lbf ft)
Screw, engine brace	M8x15	25 Nm (18.4 lbf ft) **Loctite®2701™**
Screw, engine brace	M8x20	25 Nm (18.4 lbf ft) **Loctite®243™**
Screw, engine sprocket cover	M8	15 Nm (11.1 lbf ft)
Screw, fork stub	M8	15 Nm (11.1 lbf ft)
Screw, front brake caliper	M8	25 Nm (18.4 lbf ft) **Loctite®243™**
Screw, handlebar clamp	M8	20 Nm (14.8 lbf ft)
Screw, manifold	M8	15 Nm (11.1 lbf ft)
Screw, side stand attachment	M8	33 Nm (24.3 lbf ft) **Loctite®2701™**
Screw, subframe	M8x20	30 Nm (22.1 lbf ft) **Loctite®2701™**
Screw, subframe	M8x30	30 Nm (22.1 lbf ft) **Loctite®2701™**
Screw, top steering stem	M8	17 Nm (12.5 lbf ft) **Loctite®243™**
Screw, top triple clamp	M8	17 Nm (12.5 lbf ft)
Screw, wheel speed sensor on axle clamp	M8	4.5 Nm (3.32 lbf ft)
Engine attachment bolt	M10	60 Nm (44.3 lbf ft)
Remaining nuts, chassis	M10	45 Nm (33.2 lbf ft)
Remaining screws, chassis	M10	45 Nm (33.2 lbf ft)
Screw, bottom shock absorber	M10	60 Nm (44.3 lbf ft) **Loctite®2701™**

Screw, handlebar holder	M10	40 Nm (29.5 lbf ft) **Loctite®243™**
Screw, top shock absorber	M10	60 Nm (44.3 lbf ft) **Loctite®2701™**
Nut, fuel pump fixation	M12	15 Nm (11.1 lbf ft)
Nut, angle lever to link fork	M14x1.5	60 Nm (44.3 lbf ft)
Nut, frame on linkage lever	M14x1.5	60 Nm (44.3 lbf ft)
Nut, linkage lever on angle lever	M14x1.5	60 Nm (44.3 lbf ft)
Nut, fork pivot	M16x1.5	100 Nm (73.8 lbf ft)
Nut, rear wheel spindle	M20x1.5	80 Nm (59 lbf ft)
Screw, front wheel spindle	M20x1.5	35 Nm (25.8 lbf ft)
Screw, top steering head	M20x1.5	12 Nm (8.9 lbf ft)
Screw-in fitting, cooling system	M24x1.5	18 Nm (13.3 lbf ft) **Loctite®243™**

Brake fluid DOT 4 / DOT 5.1

Standard/classification

– DOT

Guideline

– Use only brake fluid that complies with the specified standard (see specifications on the container) and that exhibits the corresponding properties.

Recommended supplier

Castrol

– **REACT PERFORMANCE DOT 4**

MOTOREX®

– **Brake Fluid DOT 5.1**

Coolant

Guideline

– Only use high-grade, silicate-free coolant with corrosion inhibitor additive for aluminum motors. Low grade and unsuitable antifreeze causes corrosion, deposits and frothing.

– Do not use pure water as only coolant is able to meet the requirements needed in terms of corrosion protection and lubrication properties.

– Only use coolant that complies with the requirements stated (see specifications on the container) and that has the relevant properties.

Antifreeze protection to at least	−25 °C (−13 °F)

The mixture ratio must be adjusted to the necessary antifreeze protection. Use distilled water if the coolant needs to be diluted.

The use of premixed coolant is recommended.

Observe the coolant manufacturer specifications for antifreeze protection, dilution and miscibility (compatibility) with other coolants.

Recommended supplier

MOTOREX®

– **COOLANT M3.0**

Engine oil (SAE 10W/50)

Standard/classification

– JASO T903 MA2 (📖 p. 154)

– SAE (📖 p. 154) (SAE 10W/50)

Guideline

– Use only engine oils that comply with the specified standards (see specifications on the container) and that possess the corresponding properties.

Fully synthetic engine oil

Recommended supplier

MOTOREX®

– **Cross Power 4T**

Fork oil (SAE 4) (48601166S1)

Standard/classification

– SAE (📖 p. 154) (SAE 4)

Guideline

– Use only oils that comply with the specified standards (see specifications on the container) and that exhibit the corresponding properties.

Shock absorber fluid (SAE 2.5) (50180751S1)

Standard/classification

– SAE (📖 p. 154) (SAE 2.5)

Guideline

– Use only oils that comply with the specified standards (see specifications on the container) and that exhibit the corresponding properties.

Super unleaded (ROZ 95)

Standard/classification

– DIN EN 228 (ROZ 95)

Guideline

– Only use super unleaded fuel that matches or is equivalent to the specified standard.
– Fuel with an ethanol content of up to 10% (E10 fuel) is safe to use.

Info

Do **not** use fuel containing methanol (e.g., M15, M85, M100) or more than 10% ethanol (e.g., E15, E25, E85, E100).

Air filter cleaner

Recommended supplier
MOTOREX®
– **Racing Bio Dirt Remover**

Chain cleaner

Recommended supplier
MOTOREX®
– **Chain Clean**

High viscosity grease

Recommended supplier
SKF®
– **LGHB 2**

Long-life grease

Recommended supplier
MOTOREX®
– **Bike Grease 2000**

Off-road chain spray

Recommended supplier
MOTOREX®
– **Chainlube Offroad**

Oil for foam air filter

Recommended supplier
MOTOREX®
– **Racing Bio Liquid Power**

Preserving materials for paints, metal and rubber

Recommended supplier
MOTOREX®
– **Moto Protect**

Silicone spray

Recommended supplier
MOTOREX®
– **Silicone Spray**

Special cleaner for glossy and matte paint finishes, metal and plastic surfaces

Recommended supplier
MOTOREX®
– **Quick Cleaner**

Universal oil spray

Recommended supplier
MOTOREX®
– **Joker 440 Synthetic**

JASO T903 MA2

Different technical development directions required a separate specification for motorcycles – the **JASO T903 MA2** standard.
Earlier, engine oils from the automobile industry were used for motorcycles because there was no separate motorcycle specification.
Whereas long service intervals are demanded for automobile engines, the focus for motorcycle engines is on high performance at high engine speeds.
In most motorcycle engines, the transmission and clutch are lubricated with the same oil.
The **JASO T903 MA2** standard meets these special requirements.

SAE

The SAE viscosity classes were defined by the Society of Automotive Engineers and are used for classifying oils according to their viscosity. The viscosity describes only one property of oil and says nothing about quality.

OBD	On-board diagnosis	Vehicle system, which monitors the specified parameters of the vehicle electronics

28 LIST OF ABBREVIATIONS

Art. no.	Article number
ca.	circa
cf.	compare
e.g.	for example
etc.	et cetera
i.a.	inter alia
no.	number
poss.	possibly

29.1 Yellow and orange symbols

Yellow and orange symbols indicate an error condition that requires prompt intervention. Active driving aids are also represented by yellow or orange symbols.

	Malfunction indicator lamp lights up/flashes yellow – The OBD has detected an error in the vehicle electronics. Come safely to a halt, and contact an authorized Husqvarna Motorcycles workshop.
	The fuel level warning lamp lights up yellow – The fuel level has reached the reserve mark.

29.2 Green and blue symbols

Green and blue symbols reflect information.

	The high beam indicator lamp lights up blue – The high beam is switched on.
	Turn signal indicator lamp flashes green – The turn signal is switched on.

1

12-V battery
- charging . . . 107
- installing . . . 105
- removing . . . 104
- starting power . . . 32

A

Accessories . . . 11

Air filter
- cleaning . . . 68
- installing . . . 68
- removing . . . 67

Air filter box
- cleaning . . . 68

Air filter box cover
- installing . . . 67
- removing . . . 67

Antifreeze
- checking . . . 117

Auxiliary substances . . . 11

B

Basic chassis setting
- rider's weight, checking with . . . 44

Blink code . . . 139-140

Brake discs
- checking . . . 87

Brake fluid
- of front brake, adding . . . 88
- of rear brake, adding . . . 94

Brake fluid level
- of front brake, checking . . . 88
- of rear brake, checking . . . 93

Brake linings
- front brake, checking . . . 89
- of the front brake, changing . . . 90
- of the rear brake, changing . . . 95
- rear brake, checking . . . 95

Brake system . . . 87-97

C

Capacity
- coolant . . . 119-120, 144
- engine oil . . . 130, 144

Chain
- checking . . . 78
- cleaning . . . 76

Chain guide
- checking . . . 78

Chain tension
- adjusting . . . 77
- checking . . . 76

Characteristic map of the throttle response
- adjusting . . . 122

Clutch
- fluid level, checking/correcting . . . 83
- fluid, changing . . . 84

Clutch lever . . . 16
- basic position, adjusting . . . 83

Cold start button . . . 21

Combination instrument
- adjusting . . . 25
- adjusting the kilometers or miles . . . 26
- clock, setting . . . 27
- combination instrument battery, changing . . . 115
- message . . . 25
- overview . . . 25
- service display, setting . . . 27

Compression damping
- fork, adjusting . . . 50

Coolant
- antifreeze and coolant level, checking . . . 117
- changing . . . 120
- draining . . . 118
- level, checking . . . 118
- refilling . . . 119

Cooling system . . . 117

Customer service . . . 11

D

Defined use . . . 7

Diagnostics connector . . . 116

Difficult operating conditions . . . 32
- dry sand . . . 32
- high temperatures . . . 34
- low temperature . . . 34
- muddy surfaces . . . 33
- slow speed . . . 34
- snow . . . 34
- wet sand . . . 33
- wet surfaces . . . 33

E

Emergency OFF switch . . . 18

Engine
- running-in . . . 31

Engine guard
installing 86
removing 85
Engine number 14
Engine oil
adding 131
changing 128
Engine oil level
checking 128
Engine sprocket
checking 78
Environment 10

F

Figures 11
Filling up
fuel 39
Foot brake lever 22
basic position, adjusting 93
free travel, checking 92
Fork legs
basic setting, checking 49
bleeding 53
dust boots, cleaning 54
installing 56
removing 55
spring preload, adjusting 51
Fork protector
installing 55
removing 54
Frame
checking 81
Front fender
installing 62
removing 61
Front wheel
installing 99
removing 98
Fuel screen
changing 127
Fuel tank
installing 74
removing 72
Fuel tank filler cap
closing 20
opening 20
Fuel, oils, etc. 11
Fuse
main fuse, changing 108
of individual electrical power consumers, changing 109

H

Hand brake lever 16
basic position, adjusting 87
Handlebar position 51
adjusting 52
Headlight
range, adjusting 115
Headlight bulb
changing 113
Headlight mask with headlight
installing 111
removing 111
Headlight setting
checking 114
High-speed compression damping
shock absorber, adjusting 45
Horn button 17

I

Idle speed
adjusting 124
Idle speed adjusting screw 21
Implied warranty 11
Intended use 7

K

Key number 14

L

Light switch 17
Link fork
checking 81
Lower triple clamp
installing 57
removing 56
Low-speed compression damping
shock absorber, adjusting 44

M

Main fuse
changing 108
Main silencer
glass fiber yarn filling, changing 71
installing 71
removing 70
Manufacturer warranty 11

Mapping
changing 124
Misuse 7
Motorcycle
cleaning 132
lift stand, raising with 53
lift stand, removing from 53

O

Oil filter
changing 128
Oil screen
cleaning 128
Overview of indicator lamps 19
Overview of indicator lights 19
Owner's Manual 10

P

Play in throttle cable
adjusting 121
checking 121
Preparing for use
advice on preparing for first use 30
after storage 135
checks and maintenance measures when preparing for use 35
Protective clothing 9

R

Rear sprocket
checking 78
Rear wheel
installing 100
removing 99
Rebound damping
fork, adjusting 50
shock absorber, adjusting 46
Riding sag
adjusting 49
Right side cover
installing 70
removing 69
Rubber grip
checking 82

S

Safe operation 8
Seat
mounting 66
removing 65
Service 11
Service schedule 41-43
Shift lever 22
basic position, adjusting 126
basic position, checking 126
Shock absorber
installing 64
removing 62
riding sag, checking 47
spring preload, adjusting 48
static sag, checking 47
Side stand 22
Spare parts 11
Spoke tension
checking 103
Start button 18
Starting 35
Starting power of lithium-ion batteries at low temperatures 32
Steering
locking 23
unlocking 24
Steering head bearing
lubricating 61
Steering head bearing play
adjusting 60
checking 59
Stop button 16
Storage 134-135

T

Technical data
capacities 144
chassis 144
chassis tightening torques 147
electrical system 145
engine 141
engine tightening torques 142
fork 146
shock absorber 146
tires 145
Throttle cable routing
checking 81
Throttle grip 16
Throttle valve position
programming 125
Tire condition
checking 102

Tire pressure
checking 102
Traction control
activating 36
Transporting 39
Troubleshooting 136-138
Turn signal bulb
changing 113
Turn signal switch 18
Type label 14

V

Vehicle identification number 14
View of vehicle
front left 12
rear right 13

W

Winter operation
checks and maintenance steps 133
Work rules 9

3402636en

28.04.2022



Husqvarna MOTORCYCLES

Husqvarna Motorcycles GmbH
Stallhofnerstraße 3 | 5230 Mattighofen | Austria
www.husqvarna-motorcycles.com

Photo: Mitterbauer/KISKA,
Husqvarna Motorcycles GmbH