OWNER'S MANUAL 2021

MC 450F
EX 450F
Art. no. 3215010en



GASGAS

DEAR GASGAS CUSTOMER

Congratulations on your decision to purchase a GASGAS motorcycle. You are now the owner of a state-of-the-art sports vehicle which, with appropriate care, will bring you pleasure for a long time to come.

We wish you good and safe riding at all times!

Enter the serial numbers of your vehicle below.

Vehicle identification number (📖 p. 12)	Dealer's stamp
Engine number (📖 p. 12)	

The Owner's Manual contained the latest information for this model series at the time of publication. However, minor differences due to further developments in design cannot be ruled out completely.

All specifications contained herein are non-binding. GASGAS Motorcycles GmbH specifically reserves the right to modify or delete technical specifications, prices, colors, forms, materials, services, designs, equipment, etc., without prior notice and without specifying reasons, to adapt these to local conditions, as well as to stop production of a particular model without prior notice. GASGAS Motorcycles accepts no liability for delivery options, deviations from illustrations and descriptions, as well as misprints and other errors. The models portrayed partly contain special equipment that does not belong to the regular scope of supply.

© 2020 GASGAS Motorcycles GmbH, Mattighofen Austria
All rights reserved
Reproduction, even in part, as well as copying of all kinds, is permitted only with the express written permission of the copyright owner.

ISO 9001(12 100 6061)
GASGAS Motorcycles applies quality assurance processes that lead to the highest possible product quality as defined in the ISO 9001 international quality management standard.
Issued by: TÜV Management Service

REG.NO. 12 100 6061

GASGAS Motorcycles GmbH
Stallhofnerstraße 3
5230 Mattighofen, Austria

This document is valid for the following models:

MC 450F (F0301U5)

EX 450F US (F0375U2)

3215010en

10/2020

TABLE OF CONTENTS

1 MEANS OF REPRESENTATION 5

1.1 Symbols used 5
1.2 Formats used 5

2 SAFETY ADVICE 6

2.1 Use definition – intended use 6
2.2 Misuse 6
2.3 Safety advice 6
2.4 Degrees of risk and symbols 6
2.5 Tampering warning 7
2.6 Safe operation 7
2.7 Protective clothing 7
2.8 Work rules 8
2.9 Environment 8
2.10 Owner's Manual 8

3 IMPORTANT NOTES 9

3.1 Manufacturer warranty, implied warranty 9
3.2 Fuel, auxiliary substances 9
3.3 Spare parts, accessories 9
3.4 Service 9
3.5 Figures 9
3.6 Customer service 9

4 VIEW OF VEHICLE 10

4.1 View of vehicle, front left (example) 10
4.2 View of vehicle, rear right (example) 11

5 SERIAL NUMBERS 12

5.1 Vehicle identification number 12
5.2 Type label 12
5.3 Engine number 12
5.4 Fork article number 12
5.5 Shock absorber article number 13

6 CONTROLS 14

6.1 Clutch lever 14
6.2 Hand brake lever 14
6.3 Throttle grip 14
6.4 Stop button 14
6.5 Start button 15
6.6 Overview of indicator lamps 15
6.7 Opening the fuel tank filler cap 15
6.8 Closing the fuel tank filler cap 16
6.9 Cold start button 17
6.10 Idle speed adjusting screw 18
6.11 Shift lever 18
6.12 Foot brake lever 19
6.13 Plug-in stand (MC) 19
6.14 Side stand (EX) 19

7 PREPARING FOR USE 20

7.1 Advice on preparing for first use 20
7.2 Running in the engine 21
7.3 Starting power of lithium-ion batteries at low temperatures 22
7.4 Preparing the vehicle for difficult operating conditions 22
7.5 Preparing the vehicle for rides on dry sand 22
7.6 Preparing the vehicle for rides on wet sand 23
7.7 Preparing the vehicle for rides on wet and muddy circuits 24
7.8 Preparing vehicle for high temperatures or slow riding 24
7.9 Preparing the vehicle for low temperatures or snow 24

8 RIDING INSTRUCTIONS 25

8.1 Checks and maintenance measures when preparing for use 25
8.2 Starting the vehicle 25
8.3 Starting off 26
8.4 Shifting, riding 26
8.5 Applying the brakes 27
8.6 Stopping, parking 27
8.7 Transporting 28
8.8 Refueling 29

9 SERVICE SCHEDULE 30

9.1 Additional information 30
9.2 Required work 30
9.3 Recommended work 31

10 TUNING THE CHASSIS 33

10.1 Checking the basic chassis setting with the rider's weight 33
10.2 Air suspension XACT 5548 33
10.3 Compression damping of the shock absorber 34
10.4 Adjusting the low-speed compression damping of the shock absorber 34
10.5 Adjusting the high-speed compression damping of the shock absorber 35
10.6 Adjusting the rebound damping of the shock absorber 35
10.7 Measuring the dimension of the rear wheel unloaded 36
10.8 Checking the static sag of the shock absorber 37
10.9 Checking the riding sag of the shock absorber 37
10.10 Adjusting the spring preload of the shock absorber 38
10.11 Adjusting the riding sag 39
10.12 Checking the basic setting of the fork 39
10.13 Adjusting the fork air pressure 40
10.14 Adjusting the compression damping of the fork 41
10.15 Adjusting the rebound damping of the fork 41
10.16 Handlebar position 42
10.17 Adjusting the handlebar position 43

11 SERVICE WORK ON THE CHASSIS 44

11.1 Raising the motorcycle with a lift stand 44
11.2 Removing the motorcycle from the lift stand 44
11.3 Bleeding the fork legs 45
11.4 Cleaning the dust boots of the fork legs 45
11.5 Removing the fork protector 46
11.6 Installing the fork protector 46
11.7 Removing the fork legs 46
11.8 Installing the fork legs 47
11.9 Removing the lower triple clamp 48
11.10 Installing the lower triple clamp 49
11.11 Checking the steering head bearing play ... 51
11.12 Adjusting the steering head bearing play 51
11.13 Lubricating the steering head bearing 52
11.14 Removing the start number plate 52
11.15 Installing the start number plate 52
11.16 Removing front fender 53
11.17 Installing front fender 53
11.18 Removing the shock absorber 54
11.19 Installing the shock absorber 55
11.20 Removing the seat 56
11.21 Mounting the seat 57
11.22 Removing the air filter box cover 57
11.23 Installing the air filter box cover 58
11.24 Removing the air filter 59
11.25 Cleaning the air filter and air filter box 59
11.26 Installing the air filter 60
11.27 Preparing air filter box cover for securing 60
11.28 Removing the main silencer 61
11.29 Installing the main silencer 61
11.30 Changing the glass fiber yarn filling of the main silencer 61
11.31 Removing the fuel tank 62
11.32 Installing the fuel tank 64
11.33 Checking for chain dirt accumulation 66
11.34 Cleaning the chain 66
11.35 Checking the chain tension 67
11.36 Adjusting the chain tension 68
11.37 Checking the chain, rear sprocket, engine sprocket, and chain guide 69
11.38 Checking the frame 71
11.39 Checking the link fork 71
11.40 Checking the throttle cable routing 71
11.41 Checking the rubber grips 72
11.42 Adjusting the basic position of the clutch lever 73
11.43 Checking/correcting the fluid level of the hydraulic clutch 73
11.44 Changing the hydraulic clutch fluid 74

12 BRAKE SYSTEM 76

12.1 Checking the free travel of the hand brake lever 76
12.2 Adjusting the basic position of the hand brake lever 76
12.3 Checking the brake discs 76
12.4 Checking the front brake fluid level 77
12.5 Adding front brake fluid 77
12.6 Checking the front brake linings 79
12.7 Changing the brake linings of the front brake 79
12.8 Checking the free travel of foot brake lever 81
12.9 Adjusting the basic position of the foot brake lever 82
12.10 Checking the rear brake fluid level 82
12.11 Adding rear brake fluid 83
12.12 Checking the brake linings of the rear brake 84
12.13 Changing the rear brake linings 84

13 WHEELS, TIRES 87

13.1 Removing the front wheel 87
13.2 Installing the front wheel 88
13.3 Removing the rear wheel 88
13.4 Installing the rear wheel 89
13.5 Checking the tire condition 91
13.6 Checking tire pressure 91
13.7 Checking the spoke tension 92

14 ELECTRICAL SYSTEM 93

14.1 Removing the 12-V battery 93
14.2 Installing the 12-V battery 93
14.3 Charging the 12-V battery 94
14.4 Changing main fuse 95
14.5 Diagnostics connector 96

15 COOLING SYSTEM 97

15.1 Cooling system 97
15.2 Checking the antifreeze and coolant level 97
15.3 Checking the coolant level 98
15.4 Draining the coolant 98
15.5 Refilling with coolant 99
15.6 Changing the coolant 100

16 TUNING THE ENGINE 101

16.1 Checking the play in the throttle cable 101
16.2 Adjusting the play in the throttle cable 101
16.3 Adjusting the characteristic map of the throttle response 102
16.4 Adjusting the idle speed 103
16.5 Programming the throttle valve position 104
16.6 Checking the basic position of the shift lever 105
16.7 Adjusting the basic position of the shift lever 105

TABLE OF CONTENTS

17 SERVICE WORK ON THE ENGINE 106

17.1 Changing the fuel screen 106
17.2 Checking the engine oil level 107
17.3 Changing the engine oil and oil filter, cleaning the oil screens 108
17.4 Adding engine oil 111

18 CLEANING, CARE 112

18.1 Cleaning the motorcycle 112

19 STORAGE 114

19.1 Storage 114
19.2 Putting into operation after storage 115

20 TROUBLESHOOTING 116

21 BLINK CODE 118

22 TECHNICAL DATA 120

22.1 Engine 120
22.2 Engine tightening torques 120
22.3 Capacities 122
22.3.1 Engine oil 122
22.3.2 Coolant 122
22.3.3 Fuel 122
22.4 Chassis 122
22.5 Electrical system 123
22.6 Tires 123
22.7 Fork 124
22.7.1 MC 124
22.7.2 EX 124
22.8 Shock absorber 125
22.8.1 MC 125
22.8.2 EX 125
22.9 Chassis tightening torques 126

23 SUBSTANCES 129

24 AUXILIARY SUBSTANCES 131

25 STANDARDS 133

26 INDEX OF SPECIAL TERMS 134

27 LIST OF ABBREVIATIONS 135

28 LIST OF SYMBOLS 136

28.1 Yellow and orange symbols 136

INDEX 137

1.1 Symbols used

The meaning of specific symbols is described below.

	Indicates an expected reaction (e.g., of a work step or a function).
	Indicates an unexpected reaction (e.g., of a work step or a function).
	All work marked with this symbol requires specialist knowledge and technical understanding. In the interest of your own safety, have this work performed by an authorized GASGAS Motorcycles workshop. Your motorcycle will be cared for there to the highest degree by specially trained experts using the special tools required.
	Indicates a page reference (more information is provided on the specified page).
	Indicates information with more details or tips.
	Indicates the result of a testing step.
	Indicates a voltage measurement.
	Indicates a current measurement.
	Indicates the end of an activity, including potential reworking.

1.2 Formats used

The typographical formats used in this document are explained below.

Proprietary name	Indicates a proprietary name.
Name®	Indicates a protected name.
Brand™	Indicates a brand available on the open market.
Underlined terms	Refer to technical details of the vehicle or indicate technical terms, which are explained in the glossary.

2 SAFETY ADVICE

2.1 Use definition – intended use

(MC)

This vehicle has been designed and built to withstand the normal stresses and strains of racing. This vehicle complies with the currently valid regulations and categories of the top international motorsports organizations.

Info
Only operate this vehicle in closed-off areas remote from public road traffic.

(EX)

This vehicle has been designed and built to withstand the normal stresses and strains of racing. This vehicle complies with the currently valid regulations and categories of the top international motorsports organizations.

Info
Only operate this vehicle in closed-off areas remote from public road traffic.
This vehicle is designed for use in offroad endurance competition, and not primarily for use in motocross.

2.2 Misuse

The vehicle must only be used as intended.
Dangers can arise for people, property and the environment through use not as intended.
Any use of the vehicle beyond the intended and defined use constitutes misuse.
Misuse also includes the use of operating and auxiliary fluids which do not meet the required specification for the respective use.

2.3 Safety advice

A number of safety instructions need to be followed to operate the product described safely. Therefore read this instruction and all further instructions included carefully. The safety instructions are highlighted in the text and are referred to at the relevant passages.

Info
Various information and warning labels are attached in prominent locations on the product described. Do not remove any information or warning labels. If they are missing, you or others may not recognize dangers and may therefore be injured.

2.4 Degrees of risk and symbols

Danger
Identifies a danger that will immediately and invariably lead to fatal or serious permanent injury if the appropriate measures are not taken.

Warning
Identifies a danger that is likely to lead to fatal or serious injury if the appropriate measures are not taken.

Caution
Identifies a danger that may lead to minor injuries if the appropriate measures are not taken.

Note
Identifies a danger that will lead to considerable machine and material damage if the appropriate measures are not taken.

Note
Indicates a danger that will lead to environmental damage if the appropriate measures are not taken.

2.5 Tampering warning

Tampering with the noise control system is prohibited. Federal law prohibits the following acts or the causing thereof:

1 The removal or rendering inoperative by any person other than for purposes of servicing, repair, or replacement, of any device or element of design incorporated into any new vehicle for the purpose of noise control prior to its sale or delivery to the ultimate purchaser or while it is in use, or
2 the use of the vehicle after such device or element of design has been removed or rendered inoperative by any person.

Among those acts presumed to constitute tampering are the acts listed below:

1 Removal or puncturing of the main silencers, baffles, header pipes or any other components which conduct exhaust gases.
2 Removal or puncturing of parts of the intake system.
3 Lack of proper maintenance.
4 Replacing moving parts of the vehicle, or parts of the exhaust system or intake system, with parts other than those specified by the manufacturer.

2.6 Safe operation

Danger

Danger of accidents A rider who is not fit to ride poses a danger to him or herself and others.

– Do not operate the vehicle if you are not fit to ride due to alcohol, drugs or medication.
– Do not operate the vehicle if you are physically or mentally impaired.

Danger

Danger of poisoning Exhaust gases are toxic and inhaling them may result in unconsciousness and death.

– Always make sure there is sufficient ventilation when running the engine.
– Use effective exhaust extraction when starting or running the engine in an enclosed space.

Warning

Danger of burns Some vehicle components become very hot when the vehicle is operated.

– Do not touch any parts such as the exhaust system, radiator, engine, shock absorber, or brake system before the vehicle parts have cooled down.
– Let the vehicle parts cool down before you perform any work on the vehicle.

Only operate the vehicle when it is in perfect technical condition, in accordance with its intended use, and in a safe and environmentally compatible manner.
The vehicle should only be used by trained persons.
Have malfunctions that impair safety immediately eliminated by an authorized GASGAS Motorcycles workshop.
Adhere to the information and warning labels on the vehicle.

2.7 Protective clothing

Warning

Risk of injury Missing or poor protective clothing presents an increased safety risk.

– Wear appropriate protective clothing such as helmet, boots, gloves as well as trousers and a jacket with protectors on all rides.
– Always wear protective clothing that is in good condition and meets the legal regulations.

In the interest of your own safety, GASGAS Motorcycles recommends that you only operate the vehicle while wearing protective clothing.

2.8 Work rules

Unless specified otherwise, the ignition must be turned off during all work (models with ignition lock, models with remote key) or the engine must be at a standstill (models without ignition lock or remote key).
Special tools are necessary for certain tasks. The tools are not a component of the vehicle, but can be ordered using the number in parentheses. Example: bearing puller (15112017000)
During assembly, use new parts to replace parts which cannot be reused (e.g. self-locking screws and nuts, expansion screws, seals, sealing rings, O-rings, pins, and lock washers).
In the case of certain screws, a screw adhesive (e.g., **Loctite®**) is required. Observe the manufacturer's instructions.
If thread locker (e.g., **Precote®**) has already been applied to a new part, do not apply any additional thread locker.
After disassembly, clean the parts that are to be reused and check them for damage and wear. Change damaged or worn parts.
After completing a repair or service work, check the operating safety of the vehicle.

2.9 Environment

If you use your motorcycle responsibly, you can ensure that problems and conflicts do not occur. To protect the future of the motorcycle sport, make sure that you use your motorcycle legally, be environmentally aware, and respect the rights of others.
When disposing of used oil, other operating and auxiliary fluids, and used components, comply with the laws and regulations of the respective country.
Because motorcycles are not subject to the EU regulations governing the disposal of used vehicles, there are no legal regulations that pertain to the disposal of an end-of-life motorcycle. Your authorized GASGAS Motorcycles workshop will be glad to advise you.

2.10 Owner's Manual

Read this owner's manual carefully and completely before making your first trip. The Owner's Manual contains useful information and many tips on how to operate, handle, and service your motorcycle. This is the only way to find out how best to customize the vehicle for your own use and how you can protect yourself from injury.

Tip
Store the Owner's Manual on your terminal device, for example, so that you can read it whenever you need to.

If you would like to know more about the vehicle or have questions on the material you read, please contact an authorized GASGAS Motorcycles dealer.
The Owner's Manual is an important component of the vehicle. If the vehicle is sold, the Owner's Manual must be downloaded again by the new owner.
The Owner's Manual can be downloaded several times using the QR code or the link on the delivery certificate.

The Owner's Manual is also available for download from your authorized GASGAS Motorcycles dealer and on the GASGAS Motorcycles website. A printed copy can also be ordered from your authorized GASGAS Motorcycles dealer.
International GASGAS Motorcycles website: http://www.gasgas.com

3.1 Manufacturer warranty, implied warranty

The work specified in the service schedule may only be carried out in an authorized GASGAS Motorcycles workshop and confirmed in the **GASGAS Motorcycles Dealer.net**, as otherwise all warranty claims will be void. Damage or secondary damage caused by tampering with and/or conversions on the vehicle are not covered by the manufacturer warranty.

3.2 Fuel, auxiliary substances



Note

Environmental hazard Improper handling of fuel is a danger to the environment.

– Do not allow fuel to enter the groundwater, the soil, or the sewage system.

Use fuels and auxiliary substances in accordance with the Owner's Manual and specification.

3.3 Spare parts, accessories

For your own safety, only use spare parts and accessory products that are approved and/or recommended by GASGAS Motorcycles and have them installed by an authorized GASGAS Motorcycles workshop. GASGAS Motorcycles accepts no liability for other products and any resulting damage or loss.
Certain spare parts and accessory products are specified in parentheses in the descriptions. Your authorized GASGAS Motorcycles dealer will be glad to advise you.

The latest news **GASGAS Technical Accessories** on your vehicle can be found on the GASGAS Motorcycles website.
International GASGAS Motorcycles website: http://www.gasgas.com

3.4 Service

A prerequisite for perfect operation and prevention of premature wear is that the service, care, and tuning work on the engine and chassis is properly carried out as described in the Owner's Manual. An incorrect suspension setting can lead to damage and breakage of chassis components.
Use of the vehicle under difficult conditions, such as on sand or on wet, dusty and muddy surfaces, can result in significantly increased wear of components, such as the drive train, brake system, air filter or suspension components. For this reason, it may be necessary to inspect or replace parts before the next scheduled service.
It is imperative that you adhere to the stipulated run-in times and service intervals. If you observe these exactly, you will ensure a much longer service life for your motorcycle.
The relevant mileage or time interval is whichever occurs first.

3.5 Figures

The figures contained in the manual may depict special equipment.
In the interest of clarity, some components may be shown disassembled or may not be shown at all. It is not always necessary to disassemble the component to perform the activity in question. Please follow the instructions in the text.

3.6 Customer service

Your authorized GASGAS Motorcycles dealer will be happy to answer any questions you may have regarding your vehicle and GASGAS Motorcycles.

A list of authorized GASGAS Motorcycles dealers can be found on the GASGAS Motorcycles website.
International GASGAS Motorcycles website: http://www.gasgas.com

4 VIEW OF VEHICLE

4.1 View of vehicle, front left (example)

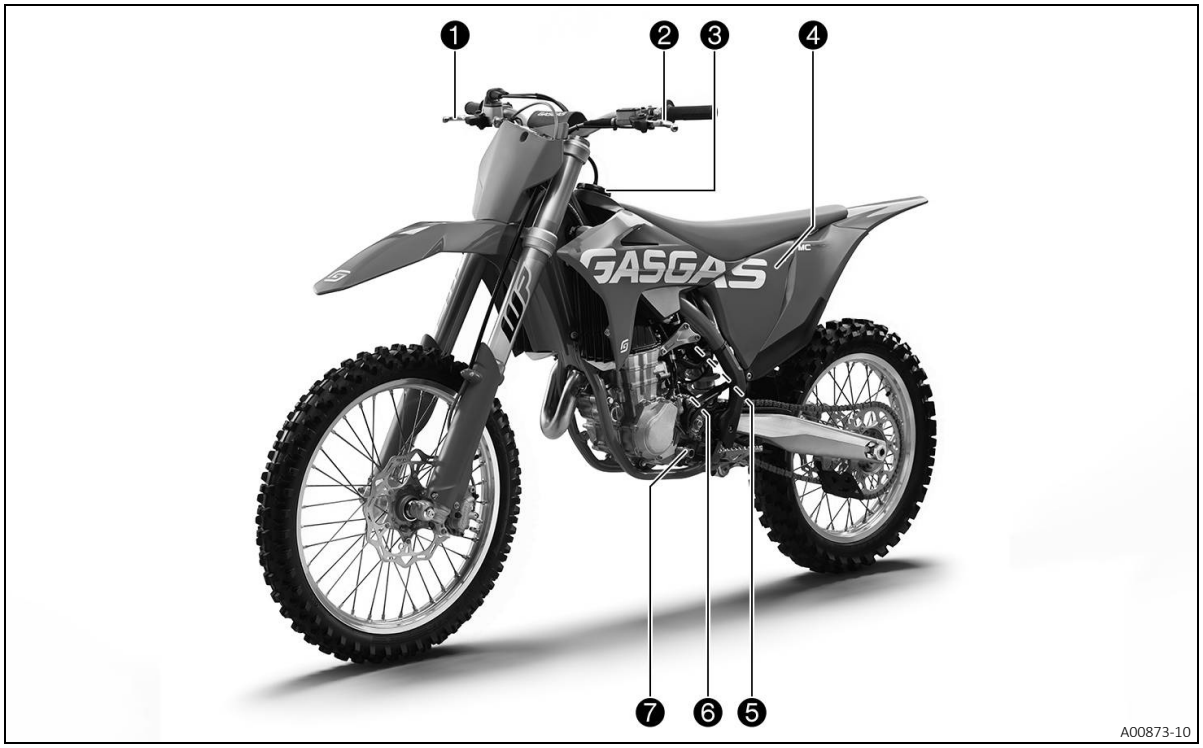

1. Hand brake lever (p. 14)
2. Clutch lever (p. 14)
3. Fuel tank filler cap
4. Air filter box cover
5. Cold start button (p. 17)
6. Engine number (p. 12)
7. Shift lever (p. 18)

4.2 View of vehicle, rear right (example)



1. Shock absorber compression adjuster
2. Stop button (p. 14)
3. Start button (p. 15)
4. Throttle grip (p. 14)
5. Vehicle identification number (p. 12)
6. Type label (p. 12)
6. Fork article number (p. 12)
7. Idle speed adjusting screw (p. 18)
8. Foot brake lever (p. 19)
9. Engine oil level viewer
10. Shock absorber rebound adjuster

5 SERIAL NUMBERS

5.1 Vehicle identification number

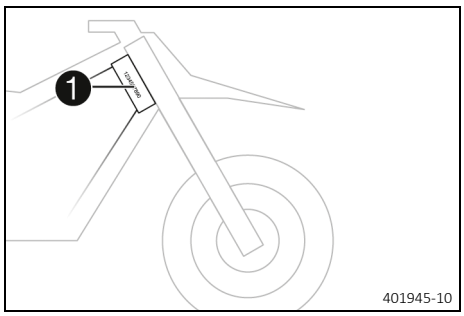

The vehicle identification number ❶ is stamped on the right side of the steering head.

5.2 Type label

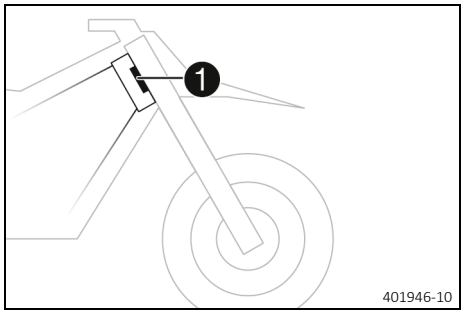

The type label ❶ is fixed to the front of the steering head.

5.3 Engine number

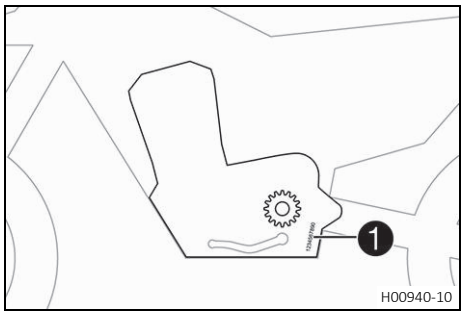

The engine number ❶ is stamped on the left side of the engine.

5.4 Fork article number

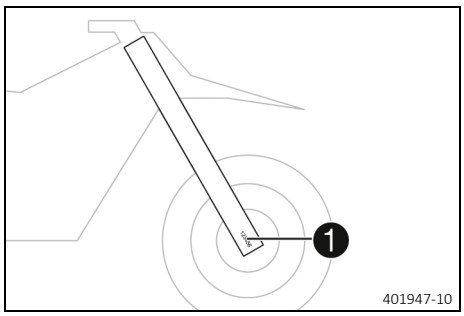

The fork article number ❶ is stamped on the inside of the axle clamp.

5.5 Shock absorber article number

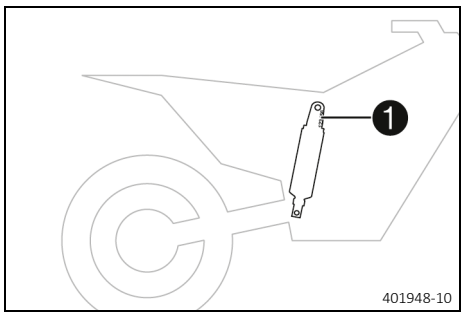

Shock absorber article number ❶ is stamped on the top of the shock absorber above the adjusting ring towards the engine side.

6.1 Clutch lever

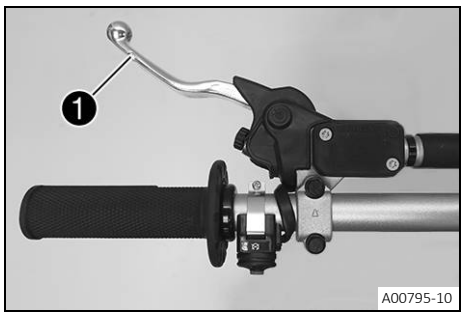

The clutch lever ❶ is fitted on the left side of the handlebar.
The clutch is hydraulically operated and self-adjusting.

6.2 Hand brake lever

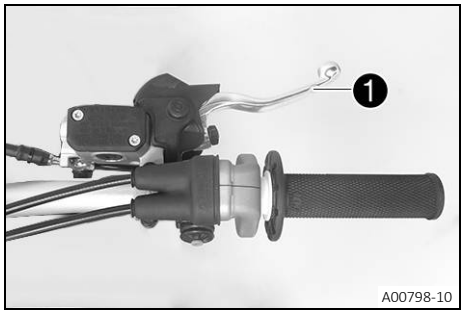

Hand brake lever ❶ is fitted on the right side of the handlebar.
The front brake is engaged using the hand brake lever.

6.3 Throttle grip

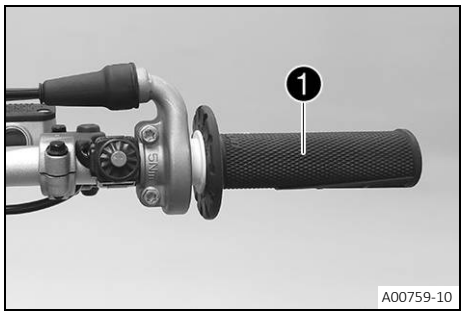

The throttle grip ❶ is fitted on the right side of the handlebar.

6.4 Stop button

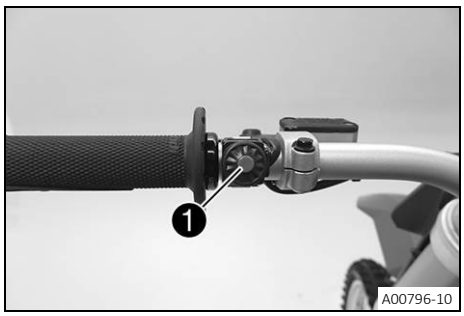

The stop button ❶ is fitted on the left side of the handlebar.

Possible states

- The stop button ☒ is in the basic position – In this position, the ignition circuit is closed and the engine can be started.
- Stop button ☒ pressed – In this position, the ignition circuit is interrupted, a running engine stops, and a non-running engine will not start.

6.5 Start button

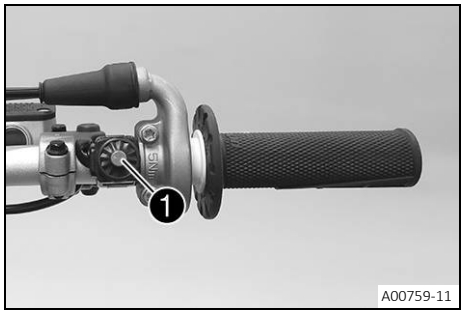

Start button ❶ is fitted on the right side of the handlebar.

Possible states

- The start button ⓚ is in the basic position
- The start button ⓚ is pressed – In this position, the starter motor is actuated.

6.6 Overview of indicator lamps

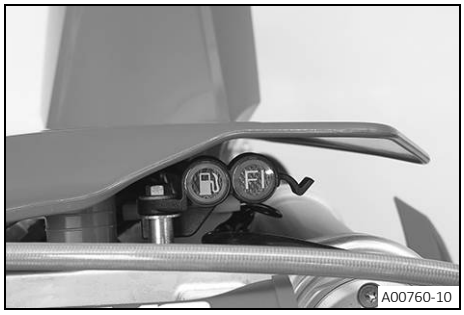

Possible states

FI	Malfunction indicator lamp lights up/flashes orange – The OBD has detected a malfunction in the vehicle electronics.

(EX)

	Fuel level warning lamp lights up orange – The fuel level has reached the reserve mark.

6.7 Opening the fuel tank filler cap

Danger

Fire hazard Fuel is highly flammable.

The fuel in the fuel tank expands when warm and can escape if overfilled.

– Do not fuel the vehicle in the vicinity of open flames or lit cigarettes.
– Switch off the engine for refueling.
– Make sure that no fuel is spilled; particularly not on hot parts of the vehicle.
– If any fuel is spilled, wipe it off immediately.
– Observe the specifications for refueling.

Warning

Danger of poisoning Fuel is poisonous and a health hazard.

– Avoid skin, eye and clothing contact with fuel.
– Immediately consult a doctor if you swallow fuel.
– Do not inhale fuel vapors.
– In case of skin contact, rinse the affected area with plenty of water.
– Rinse the eyes thoroughly with water, and consult a doctor in case of fuel contact with the eyes.
– Change your clothing in case of fuel spills on them.
– Keep fuels correctly in a suitable canister, and out of the reach of children.

Note

Environmental hazard Improper handling of fuel is a danger to the environment.

– Do not allow fuel to enter the groundwater, the soil, or the sewage system.

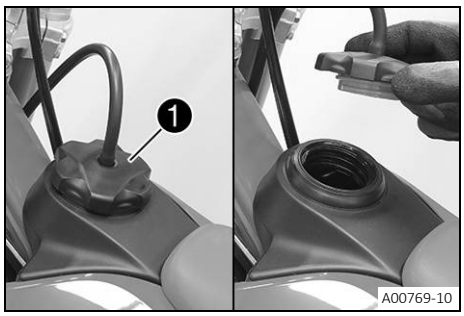

(MC)

– Turn fuel tank filler cap ❶ counterclockwise and lift it off.

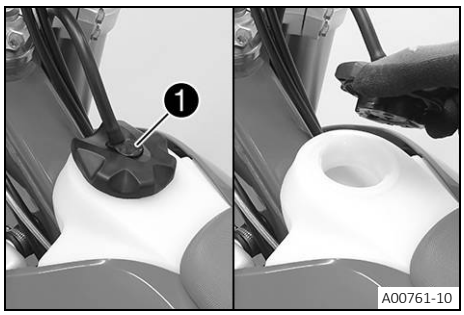

(EX)

– Press release button ❶, turn the fuel tank filler cap counterclockwise, and lift it off.

6.8 Closing the fuel tank filler cap

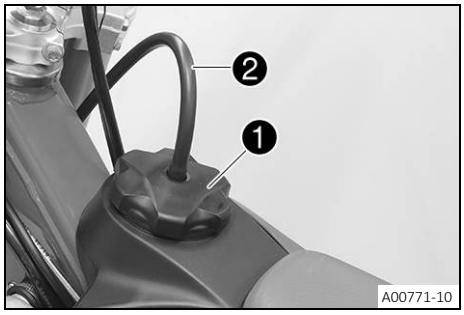

(MC)

– Mount fuel tank filler cap ❶ and turn it clockwise until the fuel tank is tightly closed.

Info

Route fuel tank breather hose ❷ without kinks.

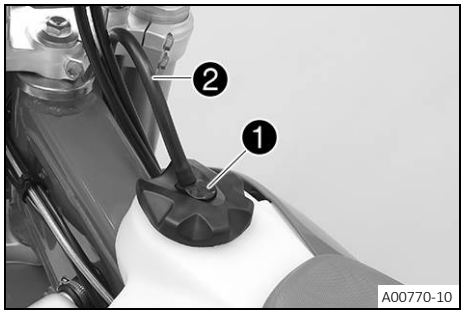

(EX)

– Mount the fuel tank filler cap and turn it clockwise until release button ❶ engages.

Info

Route fuel tank breather hose ❷ without kinks.

6.9 Cold start button

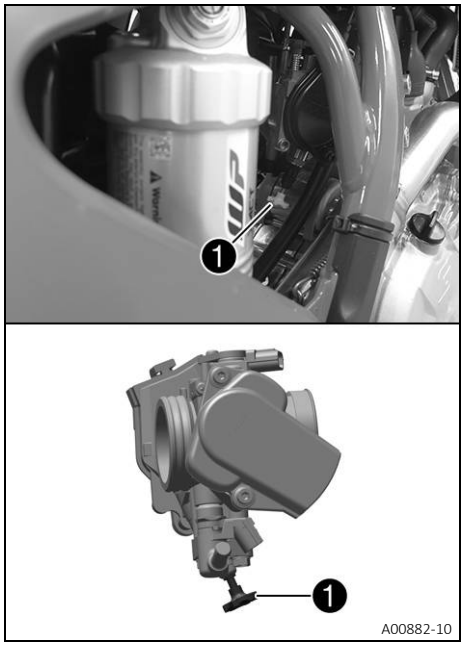

(MC)

The cold start button ❶ is fitted to the bottom of the throttle valve body.

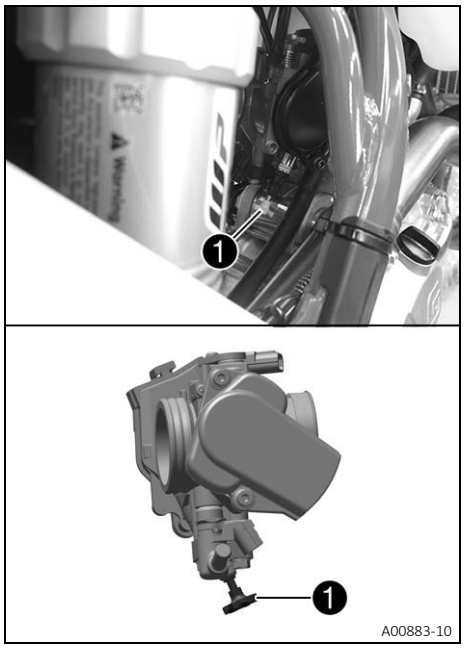

(EX)

The cold start button ❶ is fitted to the bottom of the throttle valve body.

The electronic fuel injection system extends the injection time if the engine is cold and the ambient temperature is low. To help the engine burn the increased fuel quantity, it must be supplied with additional oxygen by pushing the cold start button.
After briefly opening up the throttle and then releasing the throttle grip again, or turning the throttle grip towards the front, the cold start button returns to its original position.

Info
Check whether the cold start button has returned to its basic position.

Possible states

- The cold start button is activated – The cold start button is pushed in all the way.
- The cold start button is deactivated – The cold start button is in its basic position.

6.10 Idle speed adjusting screw

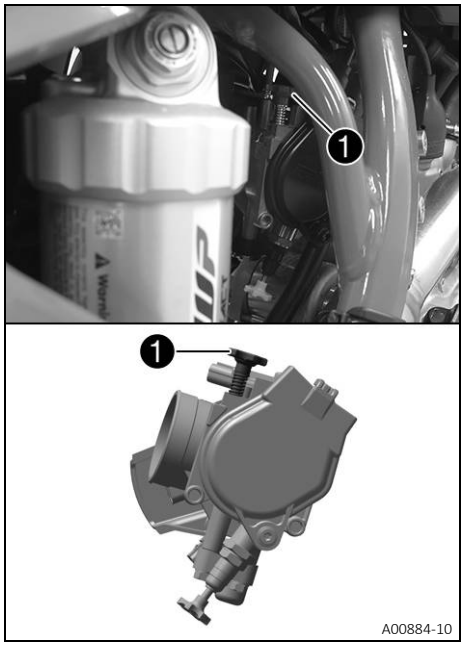

The idle setting of the throttle valve body substantially influences the vehicle's starting behavior, a stable idle speed, and the vehicle's response when the throttle is opened.
An engine with a correctly set idle speed is easier to start than an engine with the idle speed set incorrectly.
The idle speed is adjusted using the idle speed adjusting screw ❶.
Increase the idle speed by turning the idle speed adjusting screw clockwise.
Decrease the idle speed by turning the idle speed adjusting screw counterclockwise.

6.11 Shift lever

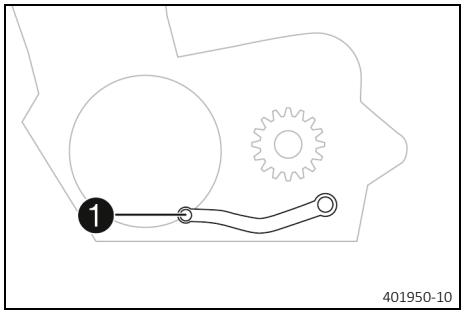

Shift lever ❶ is mounted on the left side of the engine.

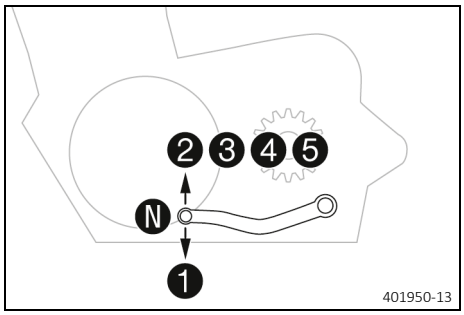

(MC)

The gear positions can be seen in the photograph.
The neutral or idle position is between the first and second gears.

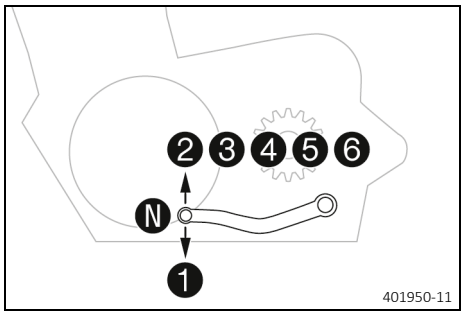

(EX)

The gear positions can be seen in the photograph.
The neutral or idle position is between the first and second gears.

6.12 Foot brake lever

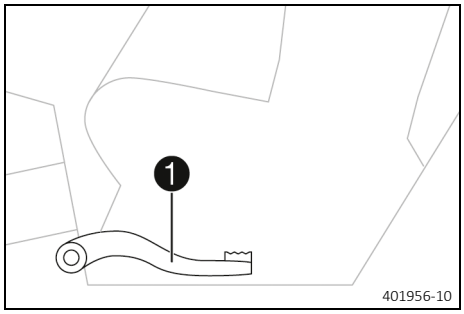

Foot brake lever ❶ is located in front of the right footrest.
The foot brake lever is used to activate the rear brake.

6.13 Plug-in stand (MC)

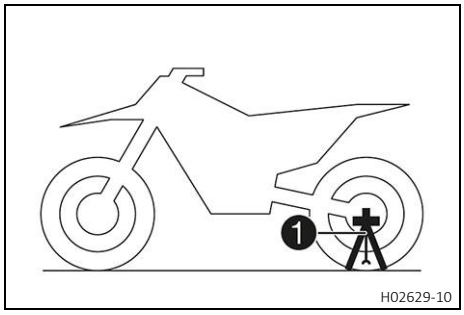

The support for plug-in stand ❶ is the left side of the wheel spindle.
The plug-in stand is used to park the motorcycle.
The plug-in stand is used as a fork locker when transporting the motorcycle.

Info
Remove the plug-in stand before riding.
The tool can be attached to the plug-in stand holders.

6.14 Side stand (EX)

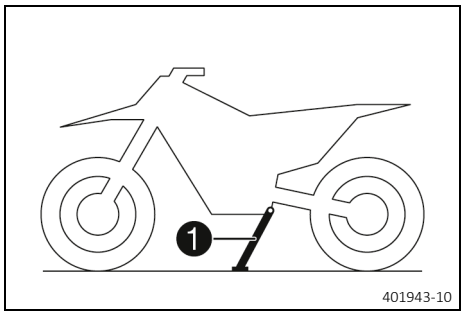

The side stand ❶ is located on the left of the vehicle.

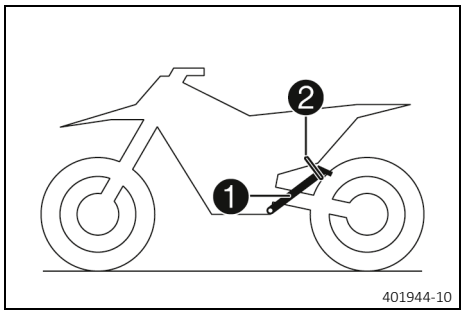

The side stand is used for parking the motorcycle.

Info
When you are riding, side stand ❶ must be folded up and secured with rubber strap ❷.

7.1 Advice on preparing for first use

Danger

Danger of accidents A rider who is not fit to ride poses a danger to him or herself and others.

– Do not operate the vehicle if you are not fit to ride due to alcohol, drugs or medication.
– Do not operate the vehicle if you are physically or mentally impaired.

Warning

Risk of injury Missing or poor protective clothing presents an increased safety risk.

– Wear appropriate protective clothing such as helmet, boots, gloves as well as trousers and a jacket with protectors on all rides.
– Always wear protective clothing that is in good condition and meets the legal regulations.

Warning

Danger of crashing Different tire tread patterns on the front and rear wheel impair the handling characteristic.

Different tire tread patterns can make the vehicle significantly more difficult to control.

– Make sure that only tires with a similar tire tread pattern are fitted to the front and rear wheel.

Warning

Danger of accidents An unadapted riding style impairs the handling characteristic.

– Adapt your riding speed to the road conditions and your riding ability.

Warning

Danger of accidents The vehicle is not designed to carry passengers.

– Do not ride with a passenger.

Warning

Danger of accidents The brake system fails in the event of overheating.

If the foot brake lever is not released, the brake linings drag continuously.

– Take your foot off the foot brake lever if you do not want to brake.

Warning

Danger of accidents Total weight and axle loads influence the handling characteristic.

– Do not exceed the maximum permissible overall weight or the axle loads.

Warning

Risk of misappropriation People who act without authorization endanger themselves and others.

– Do not leave the vehicle unattended if the engine is running.
– Protect the vehicle against access by unauthorized persons.

Info

When using the motorcycle, remember that others may be disturbed by excessive noise.

– Ensure that the pre-sale inspection work has been carried out by an authorized GASGAS Motorcycles workshop.
  ✔ You will receive a delivery certificate when the vehicle is handed over.
– Read the entire Owner's Manual before riding for the first time.
– Get to know the controls.
– Adjust the basic position of the clutch lever. (📖 p. 73)
– Adjust the basic position of the hand brake lever. (📖 p. 76)
– Adjust the basic position of the foot brake lever. 🔧 (📖 p. 82)
– Adjust the basic position of the shift lever. 🔧 (📖 p. 105)

– Get used to the handling characteristic of the motorcycle on suitable terrain before undertaking a more challenging ride.

Info
This vehicle is not approved for use on public roads.
When offroad, it is recommended that you are accompanied by another person on another vehicle so that you can help each other.

– Also, ride as slowly as possible and in a standing position to get a better feel for the motorcycle.
– Do not undertake any off-road trips that exceed your ability and experience.
– Hold the handlebar firmly with both hands and keep your feet on the footrests when riding.

(MC)

– Do not carry the luggage.

(EX)

– If luggage is carried, ensure it is fixed firmly as close as possible to the center of the vehicle and ensure even weight distribution between the front and rear wheels.

Info
Motorcycles react sensitively to any changes of weight distribution.

– Do not exceed the maximum permissible weight and maximum permissible axle loads.
Guideline

Maximum permissible overall weight	335 kg (739 lb.)
Maximum permissible front axle load	145 kg (320 lb.)
Maximum permissible rear axle load	190 kg (419 lb.)

– Run the engine in. (📖 p. 21)

7.2 Running in the engine

– Do not exceed the specified engine speed and load during the running-in period.
Guideline

Maximum engine speed	
During the first operating hour	7,000 rpm
Maximum engine performance	
During the first 3 operating hours	≤ 75 %

Info
The use of a service hour counter is recommended in order to be able to check the mileage at any time.

– Avoid fully opening the throttle.

7.3 Starting power of lithium-ion batteries at low temperatures

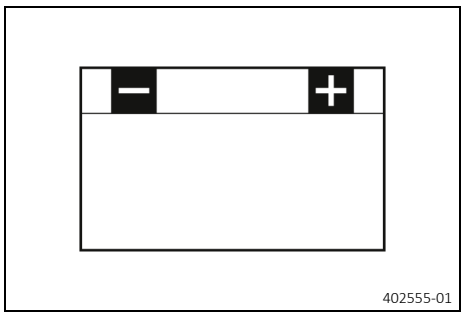

Lithium-ion batteries are far lighter than lead batteries, have a low self-discharge rate, and have more starting power at temperatures over 15 °C (60 °F). At low temperatures, however, the starting power of lithium-ion batteries drops to below that of lead batteries.
Multiple starting attempts may be needed. Press the start button for 5 seconds, and wait 30 seconds between attempts. The pauses are necessary so that the heat created can distribute through the lithium-ion battery and the 12-V battery is not damaged.
If the charged lithium-ion battery is unable to actuate the starter motor or does so only weakly when temperatures are below 15 °C (60 °F), the battery is not faulty but needs to be warmed up internally to increase its starting power (current output).
The starting power increases as the battery warms up.

7.4 Preparing the vehicle for difficult operating conditions

Info
Use of the vehicle under difficult conditions, such as on sand or on wet and muddy surfaces, can lead to considerably more rapid wear of components such as the drive train, brake system, or suspension components. For this reason, it may be necessary to inspect or replace parts before the next scheduled service.

– Clean the air filter and air filter box. (p. 59)

Info
Check the air filter approx. every 30 minutes.

– Prepare air filter box cover for securing. (p. 60)
– Check the electrical connector for humidity and corrosion and to ensure it is firmly seated.
  » If humidity, corrosion, or damage is found:
    – Clean and dry the connector, or change it if necessary.

Difficult operating conditions are:
– Rides on dry sand. (p. 22)
– Rides on wet sand. (p. 23)
– Rides on wet and muddy circuits. (p. 24)
– Rides at high temperatures or slow riding. (p. 24)
– Riding at low temperatures and in snow. (p. 24)

7.5 Preparing the vehicle for rides on dry sand



– Mount the air filter dust cover.

Air filter dust cover (79006920000)

Info
Observe the fitting instructions for **GASGAS Technical Accessories**.



– Mount the air filter sand cover.

Air filter sand cover (79006922000)

Info
Observe the fitting instructions for **GASGAS Technical Accessories**.



– Clean the chain.

Chain cleaner (📖 p. 131)

– Mount the steel sprocket.
– Grease the chain.

Universal oil spray (📖 p. 132)

– Clean the radiator fins.
– Straighten the bent radiator fins carefully.

Condition
Regular use in sand
– Change the piston every 20 operating hours.

7.6 Preparing the vehicle for rides on wet sand



– Mount the air filter rain cover.

Air filter rain cover (79006921000)

Info
Observe the fitting instructions for **GASGAS Technical Accessories**.



– Clean the chain.

Chain cleaner (📖 p. 131)

– Mount the steel sprocket.
– Grease the chain.

Universal oil spray (📖 p. 132)

– Clean the radiator fins.
– Straighten the bent radiator fins carefully.

Condition
Regular use in sand
– Change the piston every 20 operating hours.

7.7 Preparing the vehicle for rides on wet and muddy circuits



– Mount the air filter rain cover.

Air filter rain cover (79006921000)

Info
Observe the fitting instructions for **GASGAS Technical Accessories**.



– Mount the steel sprocket.
– Clean the motorcycle. (📖 p. 112)
– Straighten the bent radiator fins carefully.

7.8 Preparing vehicle for high temperatures or slow riding



– Adjust the secondary drive to the road conditions.

Info
The engine oil heats up quickly when the clutch is operated frequently due to an excessively high secondary ratio.

– Clean the chain.

Chain cleaner (📖 p. 131)

– Clean the radiator fins.
– Straighten bent radiator fins carefully.
– Check the coolant level. (📖 p. 98)

7.9 Preparing the vehicle for low temperatures or snow



– Mount the air filter rain cover.

Air filter rain cover (79006921000)

Info
Observe the fitting instructions for **GASGAS Technical Accessories**.

8.1 Checks and maintenance measures when preparing for use

Info
Before every trip, check the condition of the vehicle and ensure that it is safe to operate.
The vehicle must be in perfect technical condition when it is being operated.

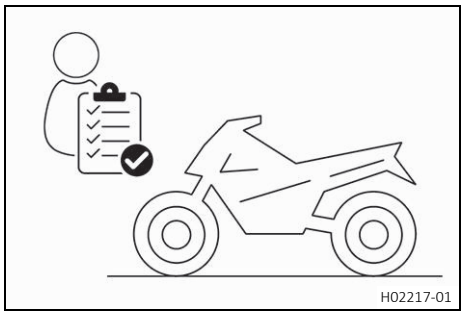
H02217-01

- Check the engine oil level. (p. 107)
- Check the front brake fluid level. (p. 77)
- Check the rear brake fluid level. (p. 82)
- Check the front brake linings. (p. 79)
- Check the brake linings of the rear brake. (p. 84)
- Check that the brake system is functioning properly.
- Check the coolant level. (p. 98)
- Check for chain dirt accumulation. (p. 66)
- Check the chain, rear sprocket, engine sprocket, and chain guide. (p. 69)
- Check the chain tension. (p. 67)
- Check the tire condition. (p. 91)
- Check tire pressure. (p. 91)
- Check the spoke tension. (p. 92)

Info
The spoke tension must be checked regularly as incorrect spoke tension will strongly impair riding safety.

- Clean the dust boots of the fork legs. (p. 45)
- Bleed the fork legs. (p. 45)
- Check the air filter.
- Check the settings of all controls and ensure that they can be operated smoothly.
- Check all screws, nuts, and hose clamps regularly for tightness.
- Check the fuel level.

8.2 Starting the vehicle

Danger
Danger of poisoning Exhaust gases are toxic and inhaling them may result in unconsciousness and death.
- Always make sure there is sufficient ventilation when running the engine.
- Use effective exhaust extraction when starting or running the engine in an enclosed space.

Note
Engine damage High revving speed with a cold engine negatively impacts the lifespan of the engine.
- Always run the engine warm at a low speed.

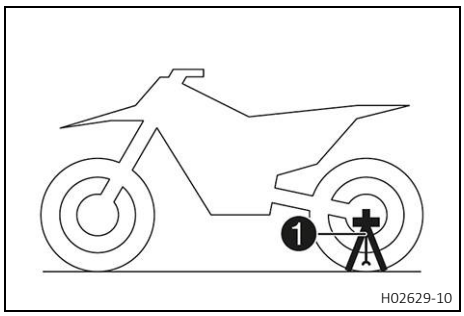

(MC)

– Remove plug-in stand ❶.

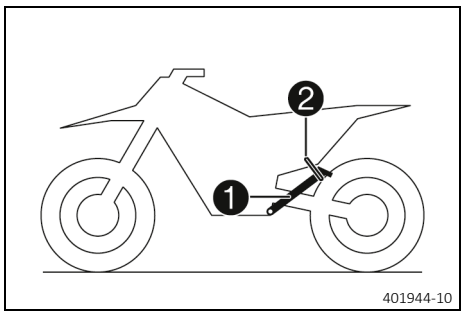

(EX)

– Take the motorcycle off side stand ❶ and secure the side stand with rubber strap ❷.

– Shift the transmission into neutral.

Condition

Ambient temperature: < 20 °C (< 68 °F)

– Push the cold start button in all the way.

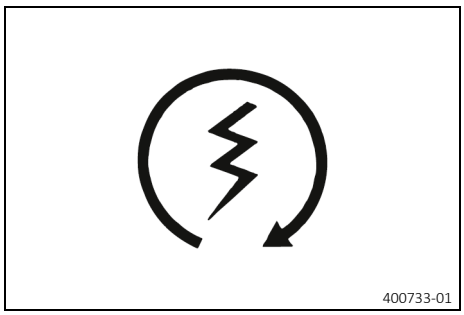

– Press start button ⓚ.

Info

Press the start button for a maximum of 5 seconds. Wait for 30 seconds before a further attempt at starting.
At temperatures below 15 °C (60 °F), several attempts at starting may be necessary to warm-up the lithium-ion battery and thereby increase the starting power.
During the starting process, the malfunction indicator lamp lights up.

8.3 Starting off

– Pull the clutch lever, engage 1st gear, release the clutch lever slowly and simultaneously open the throttle carefully.

8.4 Shifting, riding

Warning

Danger of accidents If you change down at high engine speed, the rear wheel blocks and the engine races.

– Do not change into a low gear at high engine speed.

Info

If unusual noises occur while riding, stop safely immediately, switch off the engine, and contact an authorized GAS-GAS Motorcycles workshop.
First-gear is used for starting off and for steep inclines.

– Shift into a higher gear when conditions allow (incline, road situation, etc.). To do so, release the throttle while simultaneously pulling the clutch lever, shift into the next gear, release the clutch lever and open the throttle.

– If the cold start button was pushed while starting, open the throttle briefly and release the throttle grip or turn the throttle grip forward.

✓ The cold start button goes to the basic position.

– After reaching maximum speed by fully opening the throttle grip, turn the throttle back so it is ¾ open. This will barely reduce the speed, but fuel consumption will be considerably lower.
– Only open the throttle as much as the engine can handle – abrupt throttle grip opening increases fuel consumption.
– To shift down, apply the brakes and close the throttle at the same time.
– Pull the clutch lever and shift into a lower gear, release the clutch lever slowly, and either open the throttle or shift again.
– Switch off the engine if you are likely to be running at idle speed or stationary for a long time.

  Guideline

≥ 1 min

– Avoid frequent or lengthy slipping of the clutch. This causes the engine oil, engine and cooling system to heat up.
– Ride at a low engine speed instead of at a high engine speed with a slipping clutch.

8.5 Applying the brakes

Warning
Danger of accidents Excessively forceful application of the brakes blocks the wheels.
– Adjust application of the brakes to the respective riding situation and riding surface conditions.

Warning
Danger of accidents A spongy pressure point on the front or rear brake reduces braking efficiency.
– Check the brake system and do not continue riding until the problem is eliminated. (Your authorized GAS-GAS Motorcycles workshop will be glad to help.)

Warning
Danger of accidents Moisture and dirt impair the brake system.
– Brake carefully several times to dry out and remove dirt from the brake linings and the brake discs.

– On sandy, wet, or slippery surfaces, use mostly the rear brake.
– Always finish braking before you go into a bend. Shift down to a lower gear appropriate to your speed.
– Use the braking effect of the engine on long downhill stretches. Shift back one or two gears, but do not overrev the engine when doing so. This means that significantly less braking is required and the brake system does not overheat.

8.6 Stopping, parking

Warning
Risk of misappropriation People who act without authorization endanger themselves and others.
– Do not leave the vehicle unattended if the engine is running.
– Protect the vehicle against access by unauthorized persons.

Warning
Danger of burns Some vehicle components become very hot when the vehicle is operated.
– Do not touch any parts such as the exhaust system, radiator, engine, shock absorber, or brake system before the vehicle parts have cooled down.
– Let the vehicle parts cool down before you perform any work on the vehicle.

Note
Material damage The vehicle may be damaged by incorrect procedure when parking.
Significant damage may be caused if the vehicle rolls away or falls over.
The components for parking the vehicle are designed only for the weight of the vehicle.

– Park the vehicle on a firm and level surface.
– Ensure that nobody sits on the vehicle when the vehicle is parked on a stand.

Note
Fire hazard Hot vehicle components pose a fire hazard and explosion risk.
– Do not park the vehicle near to materials which are highly flammable or explosive.
– Allow the vehicle to cool down before covering it.

– Apply the brakes on the motorcycle.
– Shift the transmission to the neutral position.
– Press and hold the stop button ⊠ while the engine is idling until the engine stops.
– Park the motorcycle on firm ground.

8.7 Transporting

Note
Danger of damage The parked vehicle can roll away or fall over.
– Park the vehicle on a firm and level surface.

Note
Fire hazard Hot vehicle components pose a fire hazard and explosion risk.
– Do not park the vehicle near to materials which are highly flammable or explosive.
– Allow the vehicle to cool down before covering it.

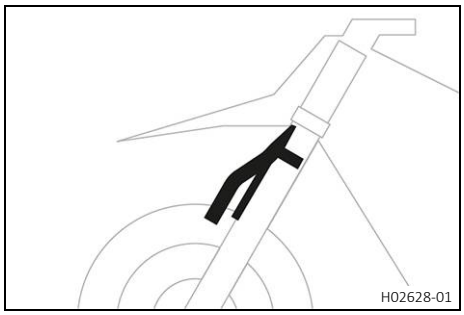

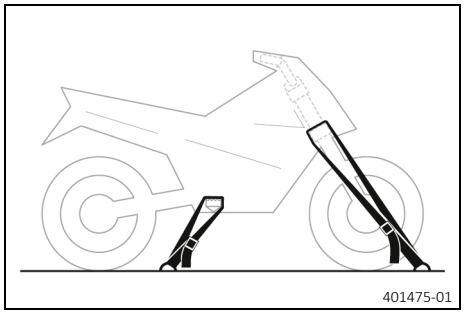

(MC)
– Switch off the engine.
– Mount plug-in stand on the fork legs.

Plug-in stand (79029094000)

Info
The plug-in stand is included.
Make sure the brake line runs in front of the plug-in stand and does not become wedged.

– Use tension belts or other suitable devices to secure the motorcycle against falling over or rolling away.

Info
Only tighten the tension belts to the point that the plug-in stand is firmly in contact with the fender and the tires. Pay attention to the alignment of the plug-in stand to the fender.

(EX)
– Switch off the engine.
– Use tension belts or other suitable devices to secure the motorcycle against falling over or rolling away.

8.8 Refueling

Danger

Fire hazard Fuel is highly flammable.

The fuel in the fuel tank expands when warm and can escape if overfilled.

– Do not fuel the vehicle in the vicinity of open flames or lit cigarettes.
– Switch off the engine for refueling.
– Make sure that no fuel is spilled; particularly not on hot parts of the vehicle.
– If any fuel is spilled, wipe it off immediately.
– Observe the specifications for refueling.

Warning

Danger of poisoning Fuel is poisonous and a health hazard.

– Avoid skin, eye and clothing contact with fuel.
– Immediately consult a doctor if you swallow fuel.
– Do not inhale fuel vapors.
– In case of skin contact, rinse the affected area with plenty of water.
– Rinse the eyes thoroughly with water, and consult a doctor in case of fuel contact with the eyes.
– Change your clothing in case of fuel spills on them.

Note

Material damage Inadequate fuel quality causes the fuel filter to quickly become clogged.

In some countries and regions, the available fuel quality and cleanliness may not be sufficient. This will result in problems with the fuel system.

– Refuel only with clean fuel that meets the specified standards. (Your authorized GASGAS Motorcycles workshop will be glad to help.)

Note

Environmental hazard Improper handling of fuel is a danger to the environment.

– Do not allow fuel to enter the groundwater, the soil, or the sewage system.

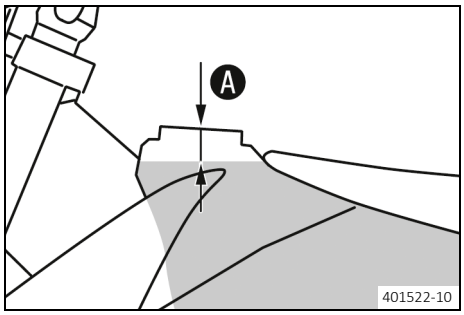

– Switch off the engine.
– Open the fuel tank filler cap. (📖 p. 15)
– Fill the fuel tank with fuel up to level Ⓐ.

Guideline

Dimension Ⓐ	35 mm (1.38 in)

Total fuel tank capacity, approx. (MC)	
Super unleaded (ROZ 95) (📖 p. 130)	7 l (1.8 US gal)
Total fuel tank capacity, approx. (EX)	
Super unleaded (ROZ 95) (📖 p. 130)	8.5 l (2.25 US gal)

– Close the fuel tank filler cap. (📖 p. 16)

9.1 Additional information

Any further work that results from the compulsory work or from the recommended work must be ordered separately and invoiced separately.
Different service intervals may apply in your country, depending on the local operating conditions.
Individual service intervals and scopes may change in the course of technical developments. The most up-to-date service schedule can always be found on GASGAS Motorcycles Dealer.net. Your authorized GASGAS Motorcycles dealer will be glad to advise you.
The use of a service hour counter is recommended in order to be able to check the mileage at any time.
Service hour counter (A54012920000)

9.2 Required work

	after every race	Every 40 operating hours	Every 30 operating hours	Every 20 operating hours	Every 10 operating hours	After 1 operating hour
Read out the fault memory using the GASGAS Motorcycles diagnostics tool. 🔧	○	●	●	●	●	●
Check and charge the 12-V battery. 🔧		●	●	●	●	●
Check the front brake linings. (📖 p. 79)		●	●	●	●	●
Check the brake linings of the rear brake. (📖 p. 84)		●	●	●	●	●
Check the brake discs. (📖 p. 76)		●	●	●	●	●
Check the brake lines for damage and leakage.		●	●	●	●	●
Check the rear brake fluid level. (📖 p. 82)		●	●	●	●	●
Check the free travel of the foot brake lever. (📖 p. 81)		●	●	●	●	●
Check the frame. 🔧 (📖 p. 71)		●	●	●	●	●
Check the link fork. 🔧 (📖 p. 71)		●	●	●	●	●
Check the fork bearing for play. 🔧			●		●	
Check the shock absorber heim joint for play. 🔧		●	●	●	●	●
Check the shock absorber linkage. 🔧		●	●	●	●	●
Check the tire condition. (📖 p. 91)	○	●	●	●	●	●
Check tire pressure. (📖 p. 91)	○	●	●	●	●	●
Check the wheel bearing for play. 🔧		●	●	●	●	●
Check the wheel hubs. 🔧		●	●	●	●	●
Check the rim run-out. 🔧	○	●	●	●	●	●
Check the spoke tension. (📖 p. 92)	○	●	●	●	●	●
Check the chain, rear sprocket, engine sprocket, and chain guide. (📖 p. 69)		●	●	●	●	●
Check the chain tension. (📖 p. 67)	○	●	●	●	●	●
Grease all moving parts (e.g., hand lever, chain, ...) and check for smooth operation. 🔧		●	●	●	●	●
Check/correct the fluid level of the hydraulic clutch. (📖 p. 73)		●	●	●	●	●
Check the front brake fluid level. (📖 p. 77)		●	●	●	●	●
Check the free travel of the hand brake lever. (📖 p. 76)		●	●	●	●	●
Check the steering head bearing play. (📖 p. 51)	○	●	●	●	●	●
Check the valve clearance. 🔧	○			●		
Check the clutch. 🔧		●	●	●	●	
Change the engine oil and the oil filter, clean the oil screens. 🔧 (📖 p. 108)	○	●	●	●	●	●
Check all hoses (e.g. fuel, cooling, bleeder, drainage hoses, etc.) and sleeves for cracking, tightness, and correct routing. 🔧	○	●	●	●	●	●

	after every race	Every 40 operating hours	Every 30 operating hours	Every 20 operating hours	Every 10 operating hours	After 1 operating hour
Check the antifreeze and coolant level. (📖 p. 97)	○	●	●	●	●	●
Check the cables for damage and for routing without kinks. 🔧		●	●	●	●	●
Check that the throttle cables are undamaged, routed without kinks, and set correctly. 🔧	○	●	●	●	●	●
Clean the air filter and air filter box. 🔧 (📖 p. 59)		●	●	●	●	●
Change the glass fiber yarn filling of the main silencer. 🔧 (📖 p. 61)			●		●	
Service the fork. 🔧					●	
Perform the shock absorber service. 🔧					●	
Check the tightness of the easily accessible, safety-relevant screws and nuts. 🔧	○	●	●	●	●	●
Change the fuel screen. 🔧 (📖 p. 106)	○	●	●	●	●	●
Check the fuel pressure. 🔧		●	●	●	●	●
Check the idle speed. 🔧	○	●	●	●	●	●
Final check: Check the vehicle for operating safety and take a test ride. 🔧	○	●	●	●	●	●
Read out the fault memory after the test ride using the GASGAS Motorcycles diagnostics tool. 🔧	○	●	●	●	●	●
Make a service entry in **GASGAS Motorcycles Dealer.net**. 🔧	○	●	●	●	●	●

○ One-time interval

● Periodic interval

9.3 Recommended work

	every 48 months	every 12 months	Every 100 operating hours	Every 50 operating hours	After 20 operating hours	After 10 operating hours
Change the front brake fluid. 🔧			●			
Change the rear brake fluid. 🔧			●			
Change the hydraulic clutch fluid. 🔧 (📖 p. 74)			●			
Lubricate the steering head bearing. 🔧 (📖 p. 52)			●			
Service the fork. 🔧						○
Perform the shock absorber service. 🔧					○	
Change the fuel filter. 🔧				●		
Change the coolant. (📖 p. 100)						●
Perform minor engine service, engine has been installed. (Change the spark plug and spark plug connector. Change the piston, check and measure the cylinder; check the cylinder head. Check the camshaft, rocker arm and rocker arm shafts. Check timing assembly.) 🔧			●	●		
Perform major engine service including removing and installing the engine. (Change valves, valve springs, valve spring seats, and valve spring retainers. Change the connecting rod, conrod bearing and crank pin. Check the transmission and the shift mechanism. Check the oil pressure control valve. Change the suction pump. Check the force pump and lubrication system. Change the timing chain. Change all engine bearings. Change the radial shaft seal rings and bearing seals of the main bearing.) 🔧				●		

- One-time interval
- Periodic interval

10.1 Checking the basic chassis setting with the rider's weight

Info
When adjusting the basic chassis setting, first adjust the shock absorber and then the fork.

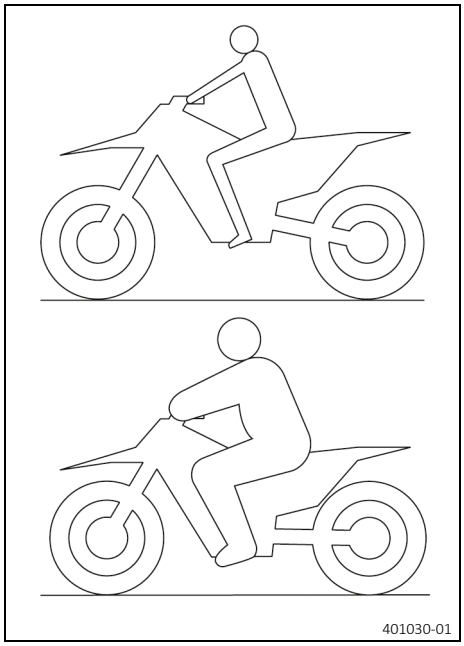

- For optimal motorcycle riding characteristics and to avoid damage to forks, shock absorbers, link fork and frame, the basic settings of the suspension components must match the rider's weight.
- As delivered, GASGAS offroad motorcycles are adjusted for an average rider's weight (with full protective clothing).

  Guideline

Standard rider weight	75 … 85 kg (165 … 187 lb.)

- If the rider's weight is above or below this range, the basic setting of the suspension components must be adjusted accordingly.
- Small weight differences can be compensated by adjusting the spring pretension of the shock absorber, but in the case of large weight differences, the springs must be replaced.

10.2 Air suspension XACT 5548

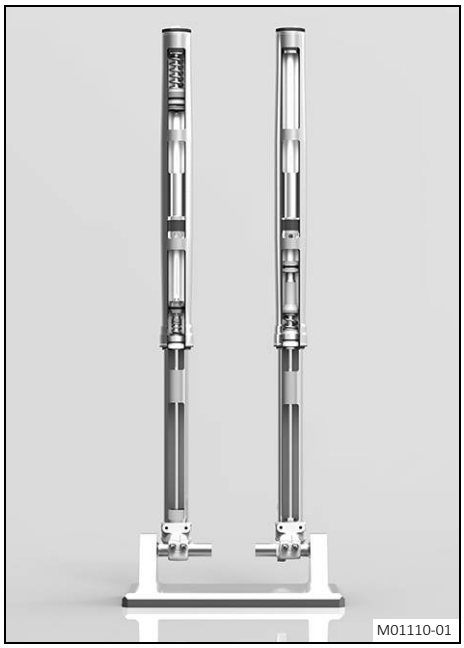

Air suspension **WP XACT 5548** is used in the fork.
In this system, suspension is located in the left fork leg and damping in the right fork leg.
As fork springs are no longer required, a significant weight advantage is achieved when compared to conventional forks. The response on slightly uneven surfaces is significantly improved.
In normal driving mode, suspension is provided exclusively by an air cushion. A steel spring is located in the left fork leg as an end stop.

Info
If the fork is frequently overloaded, then the air pressure in the fork must be increased to avoid damage to the fork and frame.

The air pressure in the fork can be quickly adjusted to the rider's weight, surface conditions and the rider's preference using a fork airpump. The fork does not have to be dismantled. The time consuming mounting of harder or softer fork springs is not required.
If the air chamber loses air due to a damaged seal, the fork will still not sag. In this case the air is retained in the fork. The suspension travel is maintained as far as possible. The damping becomes harder and the riding comfort reduces.
As with a conventional fork, the damping can be adjusted in rebound and compression stages.
The rebound adjuster is located at the lower end of the right fork leg.
The compression adjuster is located at the upper end of the right fork leg.

10.3 Compression damping of the shock absorber

The compression damping of the shock absorber is divided into two ranges: high-speed and low-speed.
High-speed and low-speed refer to the compression speed of the rear wheel suspension and not to the vehicle speed.
The high-speed compression adjuster has an effect, for example, when landing after a jump: the rear wheel suspension compresses quickly.
The low-speed compression adjuster has an effect, for example, when riding over long ground swells: the rear wheel suspension compresses slowly.
These two ranges can be adjusted separately, although the transition between high-speed and low-speed is gradual. Thus, modifications in the high-speed range affect the compression damping in the low-speed range and vice versa.

10.4 Adjusting the low-speed compression damping of the shock absorber

Caution

Risk of injury Parts of the shock absorber will move around if the shock absorber is detached incorrectly.
The shock absorber is filled with highly compressed nitrogen.

– Please follow the description provided. (Your authorized GASGAS Motorcycles workshop will be glad to help.)

Info

The effect of the low-speed compression adjuster can be seen in slow to normal compression of the shock absorber.

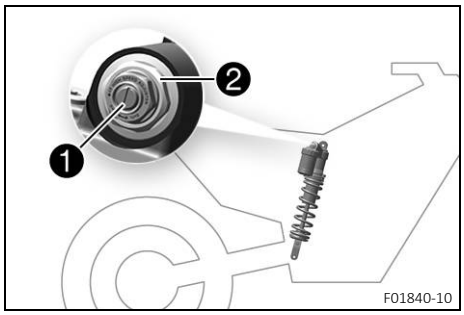

– Turn adjusting screw ❶ clockwise with a screwdriver as far as the last perceptible click.

Info

Do not loosen fitting ❷!

– Turn counterclockwise by the number of clicks corresponding to the shock absorber type.

Guideline

Lowspeed compression damping (MC)	
Comfort	17 clicks
Standard	15 clicks
Sport	13 clicks
Lowspeed compression damping (EX)	
Comfort	17 clicks
Standard	15 clicks
Sport	13 clicks

Info

Turn clockwise to increase damping; turn counterclockwise to reduce damping.

10.5 Adjusting the high-speed compression damping of the shock absorber

Caution

Risk of injury Parts of the shock absorber will move around if the shock absorber is detached incorrectly.
The shock absorber is filled with highly compressed nitrogen.

– Please follow the description provided. (Your authorized GASGAS Motorcycles workshop will be glad to help.)

Info

The effect of the high-speed compression adjuster can be seen in fast compression of the shock absorber.

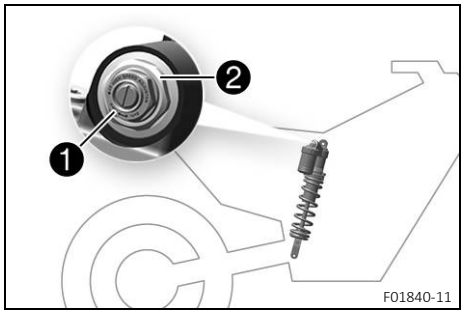

– Turn adjusting screw ❶ all the way clockwise with a socket wrench.

Info

Do not loosen fitting ❷!

– Turn counterclockwise by the number of turns corresponding to the shock absorber type.

Guideline

Highspeed compression damping (MC)	
Comfort	2 turns
Standard	1.5 turns
Sport	1 turn
Highspeed compression damping (EX)	
Comfort	2.5 turns
Standard	2 turns
Sport	1.5 turns

Info

Turn clockwise to increase damping; turn counterclockwise to reduce damping.

10.6 Adjusting the rebound damping of the shock absorber

Caution

Risk of injury Parts of the shock absorber will move around if the shock absorber is detached incorrectly.
The shock absorber is filled with highly compressed nitrogen.

– Please follow the description provided. (Your authorized GASGAS Motorcycles workshop will be glad to help.)

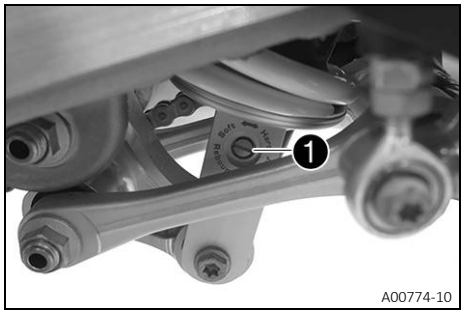

– Turn adjusting screw ❶ clockwise up to the last perceptible click.
– Turn counterclockwise by the number of clicks corresponding to the shock absorber type.

Guideline

Rebound damping (MC)	
Comfort	17 clicks
Standard	15 clicks
Sport	13 clicks
Rebound damping (EX)	
Comfort	17 clicks
Standard	15 clicks
Sport	13 clicks

Info

Turn clockwise to increase the damping; turn counterclockwise to reduce damping when the shock absorber rebounds.

10.7 Measuring the dimension of the rear wheel unloaded

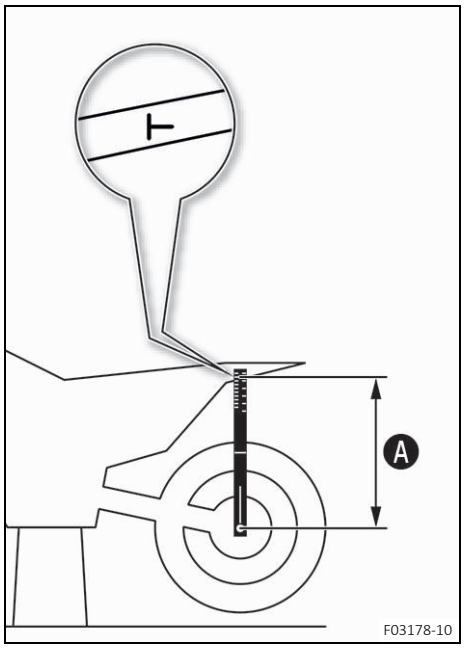

Preparatory work

– Raise the motorcycle with a lift stand. (📖 p. 44)

Main work

– Position the sag gage in the rear axle and measure the distance to the marking on the rear fender.

Sag gauge (00029090100)
Pin, sag scale (00029990010)

– Note the value as dimension Ⓐ.

Finishing work

– Remove the motorcycle from the lift stand. (📖 p. 44)

10.8 Checking the static sag of the shock absorber

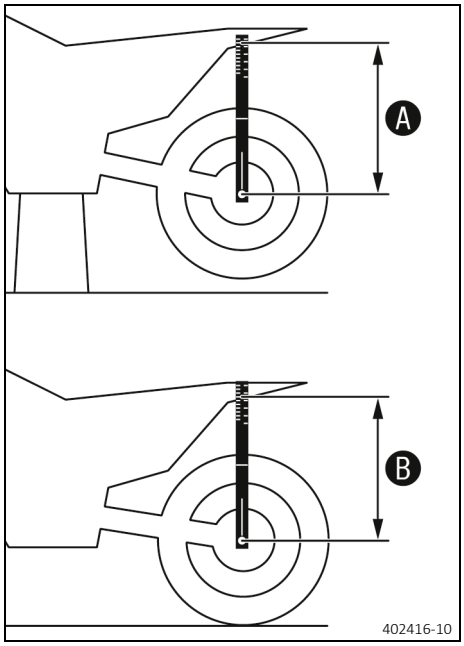

– Measure dimension A of rear wheel unloaded. (📖 p. 36)
– Hold the motorcycle upright with aid of an assistant.
– Remeasure the distance between the rear axle and the marking on the rear fender using the sag gage.
– Note the value as dimension B.

Info

The static sag is the difference between measurements A and B.

– Check the static sag.

Static sag (MC)	35 mm (1.38 in)

Static sag (EX)	35 mm (1.38 in)

» If the static sag is less or more than the specified value:
– Adjust the spring preload of the shock absorber. 🔧 (📖 p. 38)

10.9 Checking the riding sag of the shock absorber

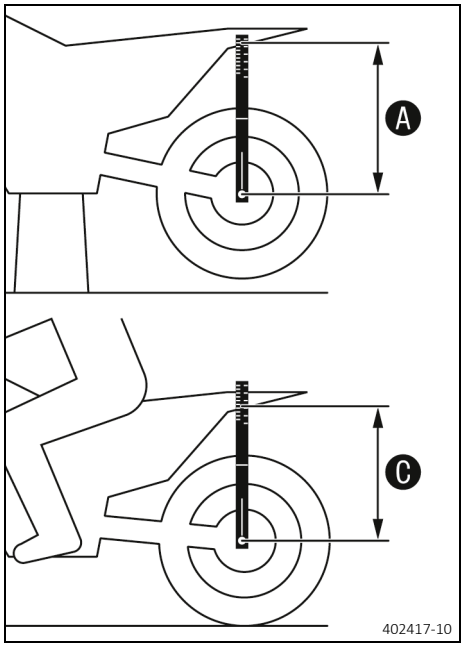

– Measure dimension A of rear wheel unloaded. (📖 p. 36)
– With another person holding the motorcycle, the rider, wearing full protective clothing, sits on the seat in a normal sitting position (feet on footrests) and bounces up and down a few times.
✔ The rear wheel suspension levels out.
– Another person now remeasures the distance between the rear axle and the marking on the rear fender using the sag gage.
– Note the value as dimension C.

Info

The riding sag is the difference between measurements A and C.

– Check riding sag.

Riding sag (MC)	105 mm (4.13 in)

Riding sag (EX)	105 mm (4.13 in)

» If the riding sag differs from the specified measurement:
– Adjust the riding sag. 🔧 (📖 p. 39)

10.10 Adjusting the spring preload of the shock absorber

Caution

Risk of injury Parts of the shock absorber will move around if the shock absorber is detached incorrectly.

The shock absorber is filled with highly compressed nitrogen.

– Please follow the description provided. (Your authorized GASGAS Motorcycles workshop will be glad to help.)

Info

Note the current adjustment before changing the spring preload - e.g. measure the spring length.

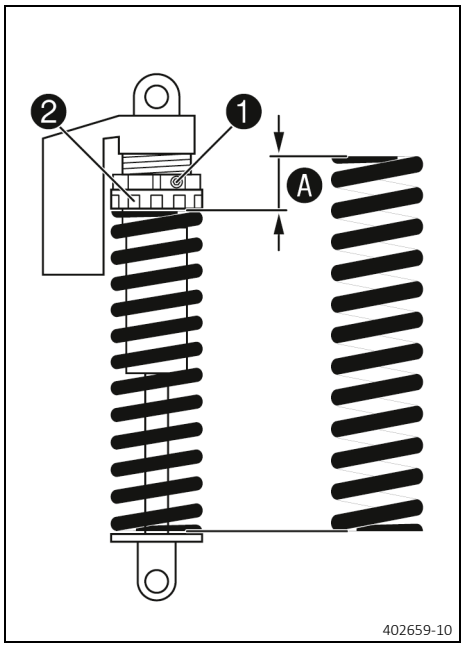

Preparatory work

– Raise the motorcycle with a lift stand. (p. 44)
– Remove the shock absorber. (p. 54)
– After removing the shock absorber, clean it thoroughly.

Main work

– Loosen screw 1.
– Turn adjusting ring 2 until the spring is no longer under tension.

Hook wrench (90129051000)

Info

If the spring cannot be fully released, the spring must be removed to accurately measure the spring length.

– Measure the total spring length while the spring is not under tension.
– Tension the spring by turning adjusting ring 2 to specified dimension A.

Guideline

Spring preload (MC)	8 mm (0.31 in)
Spring preload (EX)	7 mm (0.28 in)

Info

Depending on the static sag and/or the riding sag, it may be necessary to increase or decrease the spring preload.

– Tighten screw 1.

Guideline

Screw, shock absorber adjusting ring	M5	5 Nm (3.7 lbf ft)

Finishing work

– Install the shock absorber. (p. 55)
– Check the free travel of the foot brake lever. (p. 81)
– Remove the motorcycle from the lift stand. (p. 44)

10.11 Adjusting the riding sag

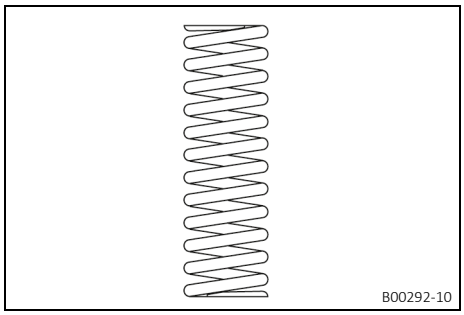

Preparatory work

– Raise the motorcycle with a lift stand. (p. 44)
– Remove the shock absorber. (p. 54)
– After removing the shock absorber, clean it thoroughly.

Main work

– Choose and mount a suitable spring.

Guideline

Spring rate (MC)	
Weight of rider: 65 … 75 kg (143 … 165 lb.)	39 N/mm (223 lb/in)
Weight of rider: 75 … 85 kg (165 … 187 lb.)	42 N/mm (240 lb/in)
Weight of rider: 85 … 95 kg (187 … 209 lb.)	45 N/mm (257 lb/in)
Spring rate (EX)	
Weight of rider: 65 … 75 kg (143 … 165 lb.)	42 N/mm (240 lb/in)
Weight of rider: 75 … 85 kg (165 … 187 lb.)	45 N/mm (257 lb/in)
Weight of rider: 85 … 95 kg (187 … 209 lb.)	48 N/mm (274 lb/in)

Info
The spring rate is shown on the outside of the spring.

Finishing work

– Install the shock absorber. (p. 55)
– Check the free travel of the foot brake lever. (p. 81)
– Check the static sag of the shock absorber. (p. 37)
– Check the riding sag of the shock absorber. (p. 37)
– Adjust the rebound damping of the shock absorber. (p. 35)
– Remove the motorcycle from the lift stand. (p. 44)

10.12 Checking the basic setting of the fork

Info
For various reasons, no exact riding sag can be determined for the fork.

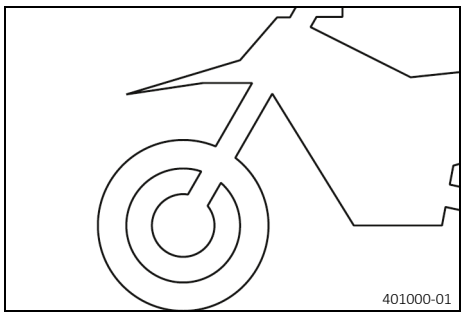

– Smaller differences in the rider's weight can be compensated for by the fork air pressure.
– However, if the fork frequently bottoms out (hard end stop on compression), the fork air pressure must be increased, within the specified values, to avoid damage to the fork and frame.
– If the fork feels unusually hard after extended periods of operation, the fork legs need to be bled.

10.13 Adjusting the fork air pressure

Warning

Danger of accident Modifications to the suspension setting may seriously alter the handling characteristic.

Extreme modifications to the suspension setting may cause a serious deterioration in the handling characteristic and overload components.

– Only make adjustments within the recommended range.
– Ride slowly to start with after making adjustments to get the feel of the new handling characteristic.

Info

Check or adjust the air pressure under the same conditions at the earliest 5 minutes after switching off the engine. The air suspension is located in the left fork leg. The pressure and rebound damping is located in the right fork leg.

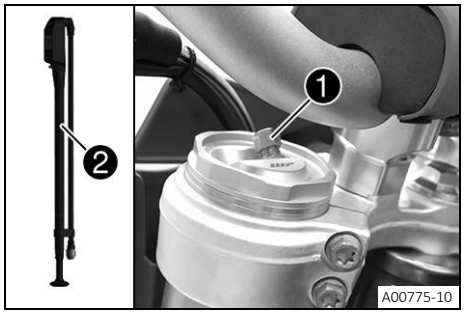

Preparatory work

– Raise the motorcycle with a lift stand. (📖 p. 44)

Main work

– Remove protection cap ❶.
– Push together fork airpump ❷ fully.

Fork airpump (79412966100)

Info

The fork airpump is included as part of the motorcycle's accessory pack.

– Connect the fork airpump to the left fork leg.
✔ The fork airpump indicator switches on automatically.
✔ A little air escapes from the fork leg when connecting.

Info

This is due to the volume of the hose and not due to a defect in the fork airpump or the fork.
Read the accompanying **GASGAS Technical Accessories** instructions.

– Adjust the air pressure as specified.

Guideline

Air pressure (MC)	10.7 bar (155 psi)
Air pressure (EX)	10.0 bar (145 psi)
Gradual changing of the air pressure in steps of	0.2 bar (3 psi)
Minimum air pressure	7 bar (102 psi)
Maximum air pressure	12 bar (174 psi)

Info

Never adjust the air pressure to a value outside the stated range.

– Disconnect the fork airpump from the left fork leg.
✔ When disconnecting, excess pressure will escape from the hose – the fork leg itself does not lose any air.

✔ The fork airpump indicator switches off automatically after 80 seconds.

– Mount the protection cap.

Info
Only mount the protection cap by hand.

Finishing work

– Remove the motorcycle from the lift stand. (p. 44)

10.14 Adjusting the compression damping of the fork

Info
The hydraulic compression damping determines the fork suspension behavior.

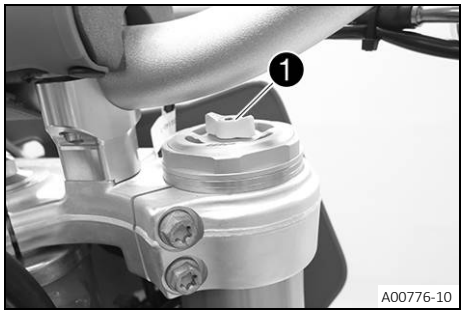

– Turn adjuster ❶ clockwise all the way to the stop.

Info
Adjuster ❶ is located at the upper end of the right fork leg.

– Turn counterclockwise by the number of clicks corresponding to the fork type.

Guideline

Compression damping (MC)	
Comfort	17 clicks
Standard	12 clicks
Sport	7 clicks
Compression damping (EX)	
Comfort	17 clicks
Standard	12 clicks
Sport	7 clicks

Info
Turn clockwise to increase damping; turn counterclockwise to reduce damping during compression.

10.15 Adjusting the rebound damping of the fork

Info
The hydraulic rebound damping determines the fork suspension behavior.

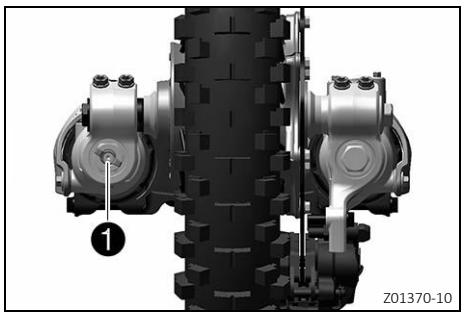

– Turn adjusting screw 1 clockwise all the way.

Info

Adjusting screw 1 is located at the lower end of the right fork leg.

– Turn counterclockwise by the number of clicks corresponding to the fork type.

Guideline

Rebound damping (MC)	
Comfort	17 clicks
Standard	12 clicks
Sport	7 clicks
Rebound damping (EX)	
Comfort	23 clicks
Standard	18 clicks
Sport	13 clicks

Info

Turn clockwise to increase the damping; turn counterclockwise to reduce damping when the shock absorber rebounds.

10.16 Handlebar position

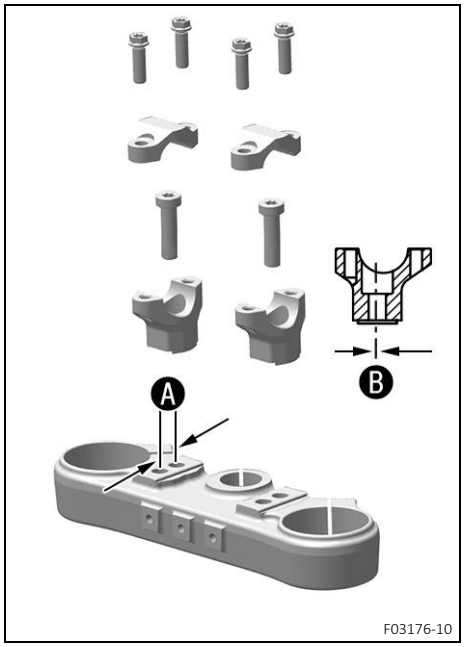

On the upper triple clamp, there are 2 holes at a distance of A to each other.

Hole distance A	15 mm (0.59 in)

The holes on the handlebar supports are placed at a distance of B from the center.

Hole distance B	3.5 mm (0.138 in)

The handlebar supports can be mounted in four different positions.

10.17 Adjusting the handlebar position

Warning

Danger of accidents A repaired handlebar poses a safety risk.

If the handlebar is bent or straightened, the material becomes fatigued. The handlebar may break as a result.

– Change the handlebar if the handlebar is damaged or bent.

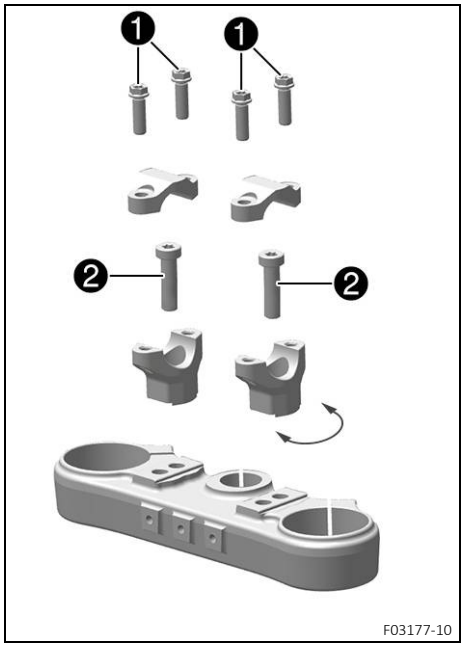

Preparatory work

– Remove the handlebar cushion.

Main work

– Remove screws 1. Take off the handlebar clamps. Remove the handlebar and lay it to one side.

Info
Cover the components to protect them against damage.
Do not kink the cables and lines.

– Remove screws 2. Take off handlebar supports.

– Place handlebar supports in required position. Mount and tighten screws 2.

Guideline

Screw, handlebar support	M10	40 Nm (29.5 lbf ft) **Loctite®243™**

Info
Position the left and right handlebar supports evenly.

– Position the handlebar.

Info
Make sure the cables and wiring are positioned correctly.

– Position the handlebar clamps. Mount screws 1 and tighten evenly.

Guideline

Screw, handlebar clamp	M8	20 Nm (14.8 lbf ft)

Info
Make sure the installed gaps are even.

Finishing work

– Mount the handlebar cushion.

11.1 Raising the motorcycle with a lift stand

Note

Material damage The vehicle may be damaged by incorrect procedure when parking.

Significant damage may be caused if the vehicle rolls away or falls over.
The components for parking the vehicle are designed only for the weight of the vehicle.

– Park the vehicle on a firm and level surface.
– Ensure that nobody sits on the vehicle when the vehicle is parked on a stand.

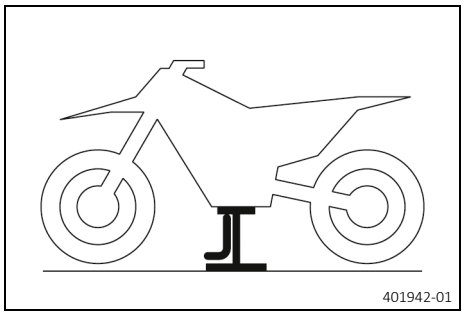
401942-01

(MC)

– Remove the plug-in stand and lift up the motorcycle by the frame underneath the engine.

Lift stand (A54029955100)

✔ Neither wheel is in contact with the ground.

(EX)

– Fold in the side stand and raise the motorcycle at the frame underneath the engine.

Lift stand (A54029955100)

✔ Neither wheel is in contact with the ground.

– Secure the motorcycle against falling over.

11.2 Removing the motorcycle from the lift stand

Note

Material damage The vehicle may be damaged by incorrect procedure when parking.

Significant damage may be caused if the vehicle rolls away or falls over.
The components for parking the vehicle are designed only for the weight of the vehicle.

– Park the vehicle on a firm and level surface.
– Ensure that nobody sits on the vehicle when the vehicle is parked on a stand.

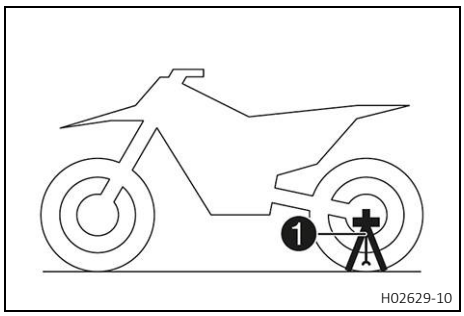

H02629-10

(MC)

– Remove the motorcycle from the lift stand.
– Remove the lift stand.
– To park the motorcycle, insert plug-in stand ❶ into the left side of the wheel spindle.

Plug-in stand (79029094000)

Info

The plug-in stand is included.
Remove the plug-in stand before riding.

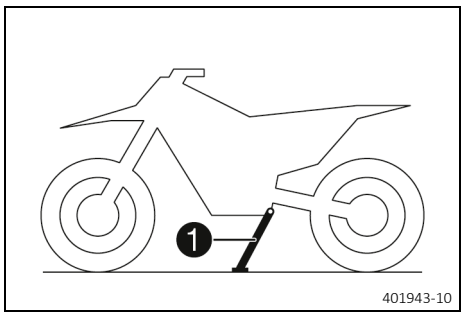

(EX)

– Remove the motorcycle from the lift stand.
– Remove the lift stand.
– To park the motorcycle, press side stand ❶ to the ground with your foot and lean the motorcycle on it.

Info
When you are riding, the side stand must be folded up and secured with the rubber strap.

11.3 Bleeding the fork legs

Preparatory work

– Raise the motorcycle with a lift stand. (📖 p. 44)

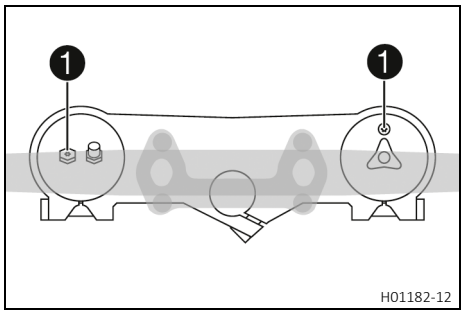

Main work

– Release bleeder screws ❶.
  ✔ Any excess pressure escapes from the interior of the fork.
– Tighten the bleeder screws.

Finishing work

– Remove the motorcycle from the lift stand. (📖 p. 44)

11.4 Cleaning the dust boots of the fork legs

Preparatory work

– Raise the motorcycle with a lift stand. (📖 p. 44)
– Remove the fork protector. (📖 p. 46)

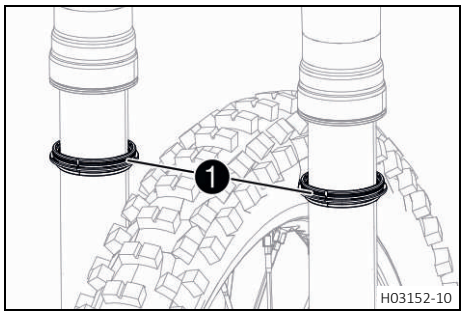

Main work

– Push dust boots ❶ of both fork legs downward.

Info
The dust boots remove dust and coarse dirt particles from the inside fork tubes. Over time, dirt can accumulate behind the dust boots. If this dirt is not removed, the oil seals behind can start to leak.

Warning
Danger of accidents Oil or grease on the brake discs reduces the braking effect.
– Always keep the brake discs free of oil and grease.
– Clean the brake discs with brake cleaner when necessary.

– Clean and oil the dust boots and inner fork tubes of both fork legs.

Universal oil spray (📖 p. 132)

– Press the dust boots back into their installation position.
– Remove excess oil.

Finishing work
– Install the fork protector. (📖 p. 46)
– Remove the motorcycle from the lift stand. (📖 p. 44)

11.5 Removing the fork protector

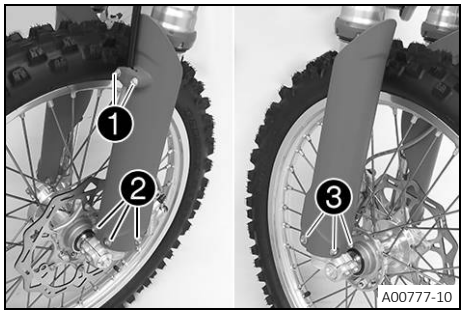

– Remove screws ❶ and take off the clamp.
– Remove screws ❷ and take off the left fork protector.
– Remove screws ❸ and take off the right fork protector.

11.6 Installing the fork protector

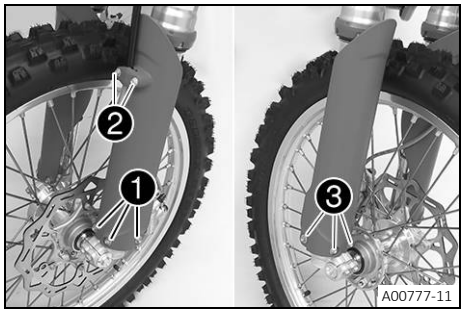

– Position the fork protector on left fork leg. Mount and tighten screws ❶.

Guideline

Remaining screws, chassis	M6	10 Nm (7.4 lbf ft)

– Position the brake line and the clamp. Mount and tighten screws ❷.

Guideline

Screw, brake line bracket	**EJOT**	1.7 Nm (1.25 lbf ft)

– Position the fork protector on the right fork leg. Mount and tighten screws ❸.

Guideline

Remaining screws, chassis	M6	10 Nm (7.4 lbf ft)

11.7 Removing the fork legs 🔧

Preparatory work
– Raise the motorcycle with a lift stand. (📖 p. 44)
– Remove the front wheel. 🔧 (📖 p. 87)

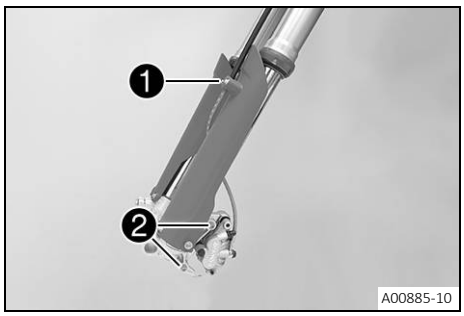

Main work

- Remove screws 1 and take off the clamp.
- Remove screws 2 and take off the brake caliper.
- Allow the brake caliper and the brake line to hang loosely to the side.

Info
Do not actuate the hand brake lever when the front wheel is removed.

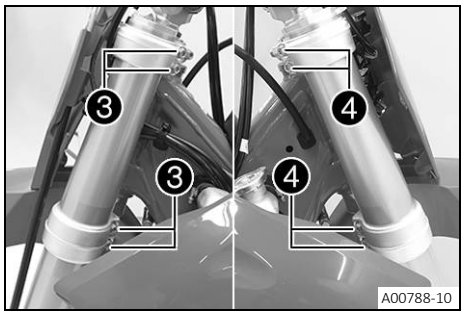

- Loosen screws 3. Remove the left fork leg.
- Loosen screws 4. Remove the right fork leg.

11.8 Installing the fork legs

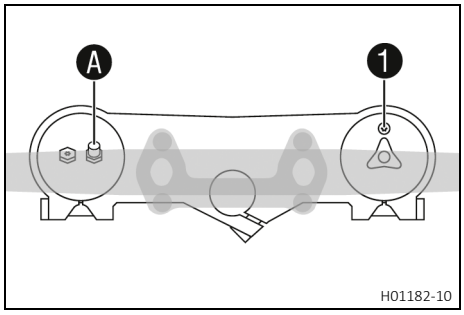

Main work

- Position the fork legs.
  - ✓ Air bleeder screw 1 of the right fork leg is positioned to the front.
  - ✓ Valve A of the left fork leg faces the front.

Info
Grooves are milled into the side of the upper end of the fork legs. The second milled groove (from the top) must be flush with the upper edge of the upper triple clamp.
The air suspension is located in the left fork leg. The pressure and rebound damping is located in the right fork leg.

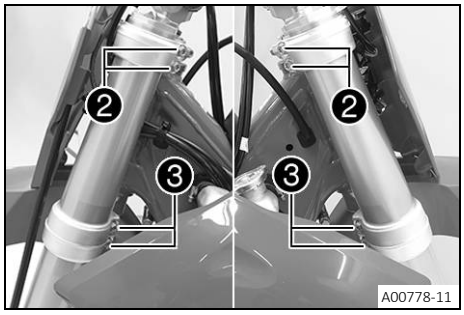

- Tighten screws 2.

Guideline

Screw, top triple clamp	M8	20 Nm (14.8 lbf ft)

- Tighten screws 3.

Guideline

Screw, bottom triple clamp	M8	15 Nm (11.1 lbf ft)

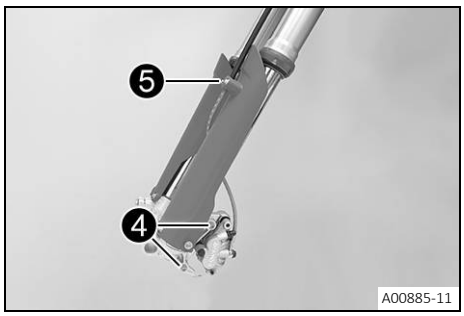

– Position the brake caliper. Mount and tighten screws 4.

Guideline

Screw, front brake caliper	M8	25 Nm (18.4 lbf ft) **Loctite®243™**

– Position the brake line and the clamp. Mount and tighten screws 5.

Guideline

Screw, brake line bracket	**EJOT**	1.7 Nm (1.25 lbf ft)

Finishing work

– Install the front wheel. (p. 88)

11.9 Removing the lower triple clamp

Preparatory work

– Raise the motorcycle with a lift stand. (p. 44)
– Remove the front wheel. (p. 87)
– Remove the fork legs. (p. 46)
– Remove the start number plate. (p. 52)
– Remove front fender. (p. 53)
– Remove the handlebar cushion.

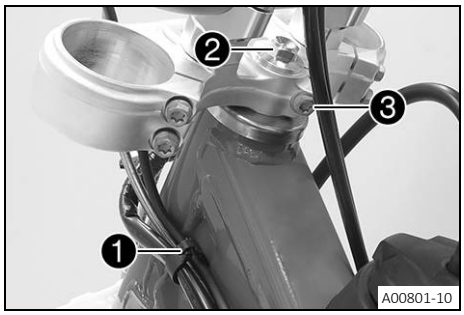

Main work

– Open cable holder 1 on the left and detach the wiring harness.
– Remove screw 2.
– Remove screw 3.
– Take off the upper triple clamp with the handlebar and set aside.

Info

Cover the components to protect them against damage. Do not kink the cables and lines.

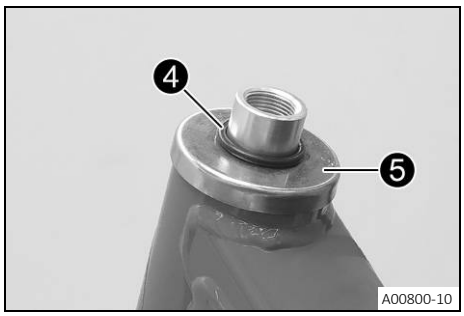

– Remove O-ring 4.
– Remove protective ring 5.
– Remove the lower triple clamp with the steering stem.
– Remove the upper steering head bearing.

11.10 Installing the lower triple clamp

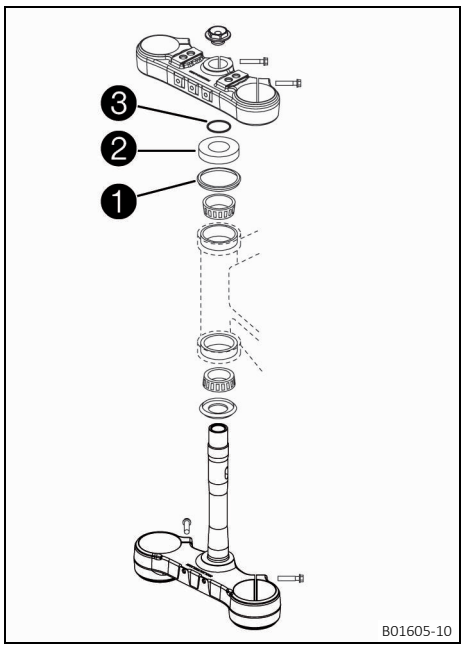

Main work

– Clean the bearing and sealing elements, check for damage, and grease.

High viscosity grease (p. 131)

– Insert the lower triple clamp with the steering stem. Mount upper steering head bearing.

– Check that the O-ring at the top ❶ is correctly positioned.

– Slide on protective ring ❷ and O-ring ❸.

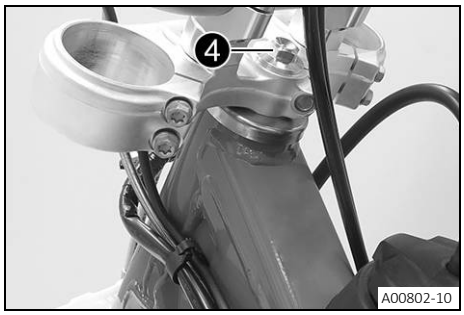

– Position the upper triple clamp with the handlebar.

– Mount screw ❹, but do not tighten yet.

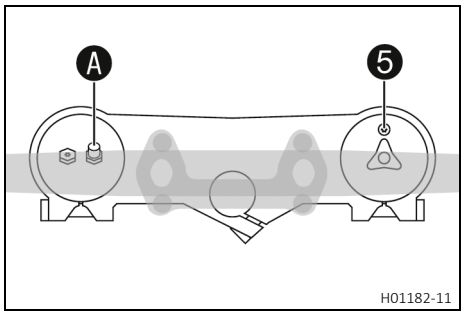

– Position the fork legs.

✓ Air bleeder screw ❺ of the right fork leg is positioned to the front.

✓ Valve Ⓐ of the left fork leg faces the front.

Info

Grooves are milled into the side of the upper end of the fork legs. The second milled groove (from the top) must be flush with the upper edge of the upper triple clamp.
The air suspension is located in the left fork leg. The pressure and rebound damping is located in the right fork leg.

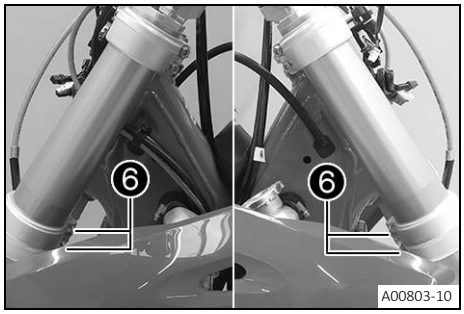

– Tighten screws ❻.

Guideline

Screw, bottom triple clamp	M8	15 Nm (11.1 lbf ft)



– Tighten screw 4.

Guideline

Screw, top steering head	M20x1.5	12 Nm (8.9 lbf ft)

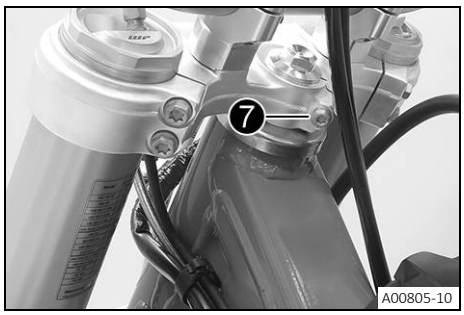

– Mount and tighten screw 7.

Guideline

Screw, top steering stem	M8	20 Nm (14.8 lbf ft) **Loctite®243™**

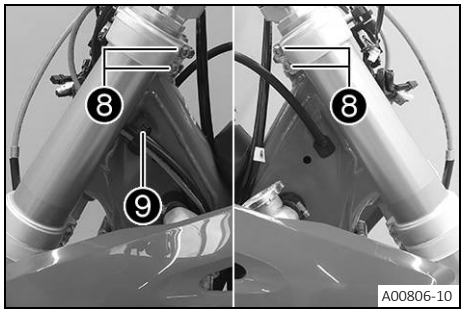

– Using a plastic hammer, tap lightly on the upper triple clamp to avoid stresses.
– Tighten screws 8.

Guideline

Screw, top triple clamp	M8	20 Nm (14.8 lbf ft)

– Secure the wiring harness with cable holder 9 on the left.

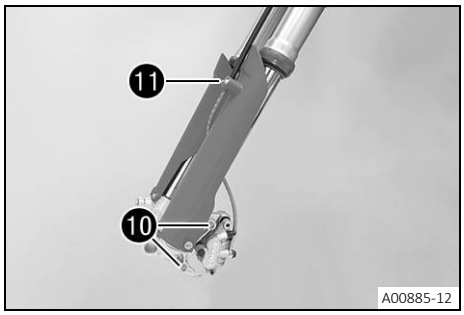

– Position the brake caliper. Mount and tighten screws 10.

Guideline

Screw, front brake caliper	M8	25 Nm (18.4 lbf ft) **Loctite®243™**

– Position the brake line and the clamp. Mount and tighten screws 11.

Guideline

Screw, brake line bracket	**EJOT**	1.7 Nm (1.25 lbf ft)

Finishing work

– Install front fender. (📖 p. 53)
– Mount the handlebar cushion.
– Install the start number plate. (📖 p. 52)
– Install the front wheel. 🔧 (📖 p. 88)
– Check that the wiring harness, throttle cables, and brake and clutch lines can move freely and are routed correctly.
– Check the steering head bearing play. (📖 p. 51)
– Remove the motorcycle from the lift stand. (📖 p. 44)

11.11 Checking the steering head bearing play

Warning

Danger of accidents Incorrect steering head bearing play impairs the handling characteristic and damages components.

– Correct incorrect steering head bearing play immediately. (Your authorized GASGAS Motorcycles workshop will be glad to help.)

Info

If the vehicle is operated for a lengthy period with play in the steering head bearing, the bearings and the bearing seats in the frame can become damaged over time.

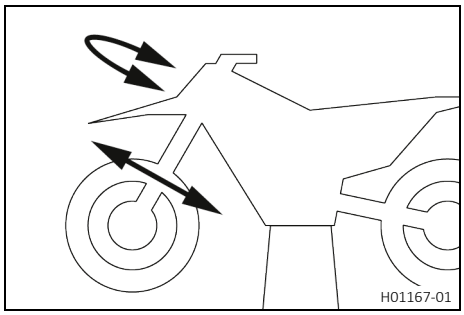

Preparatory work

– Raise the motorcycle with a lift stand. (p. 44)

Main work

– Move the handlebar to the straight-ahead position. Move the fork legs to and fro in the direction of travel.

Play should not be detectable on the steering head bearing.

» If there is detectable play:

– Adjust the steering head bearing play. (p. 51)

– Move the handlebar to and fro over the entire steering range.

It must be possible to move the handlebar easily over the entire steering range. There should be no detectable detent positions.

» If detent positions are detected:

– Adjust the steering head bearing play. (p. 51)

– Check the steering head bearing and adjust if necessary.

Finishing work

– Remove the motorcycle from the lift stand. (p. 44)

11.12 Adjusting the steering head bearing play

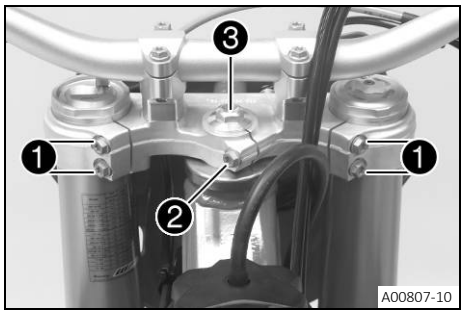

Preparatory work

– Raise the motorcycle with a lift stand. (p. 44)

– Remove the handlebar cushion.

Main work

– Loosen screws 1.

– Remove screw 2.

– Loosen and retighten screw 3.

Guideline

Screw, top steering head	M20x1.5	12 Nm (8.9 lbf ft)

– Using a plastic hammer, tap lightly on the upper triple clamp to avoid stresses.

– Mount and tighten screw 2.

Guideline

Screw, top triple clamp	M8	20 Nm (14.8 lbf ft)

– Tighten screws 1.

Guideline

Screw, top triple clamp	M8	20 Nm (14.8 lbf ft)

– Check the steering head bearing play. (📖 p. 51)

Finishing work

– Mount the handlebar cushion.

– Remove the motorcycle from the lift stand. (📖 p. 44)

11.13 Lubricating the steering head bearing

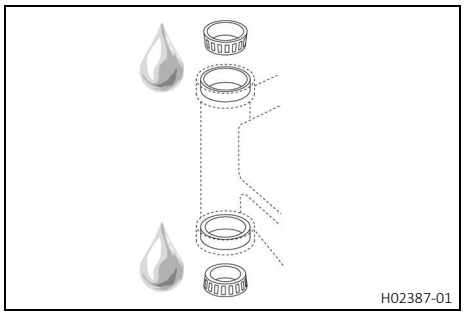

– Remove the lower triple clamp. (📖 p. 48)

– Install the lower triple clamp. (📖 p. 49)

Info

The steering head bearing is cleaned and lubricated in the course of removal and installation of the lower triple clamp.

11.14 Removing the start number plate

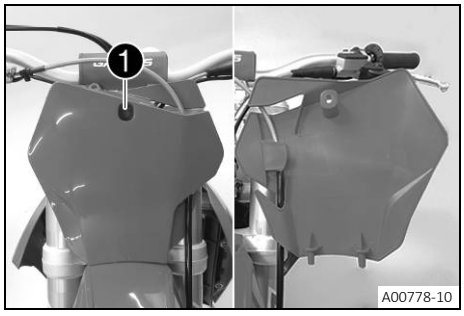

– Remove screw 1.

– Unhook the start number plate from the brake line and remove it.

11.15 Installing the start number plate

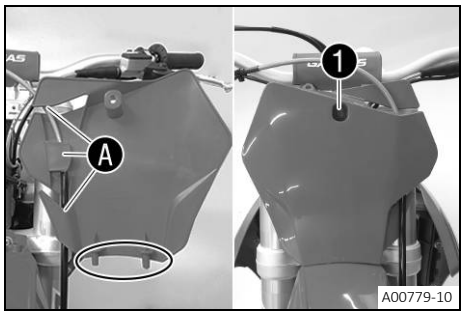

– Position the brake line in holders A on the start number plate.

– Position the start number plate. Mount and tighten screw 1.

✓ The holding lugs engage in the fender.

11.16 Removing front fender

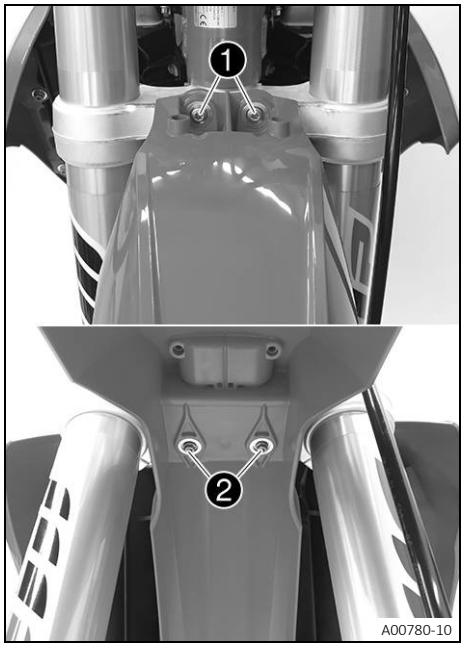

Preparatory work

– Remove the start number plate. (📖 p. 52)

Main work

– Remove screws ❶ and ❷. Take off the front fender.

11.17 Installing front fender

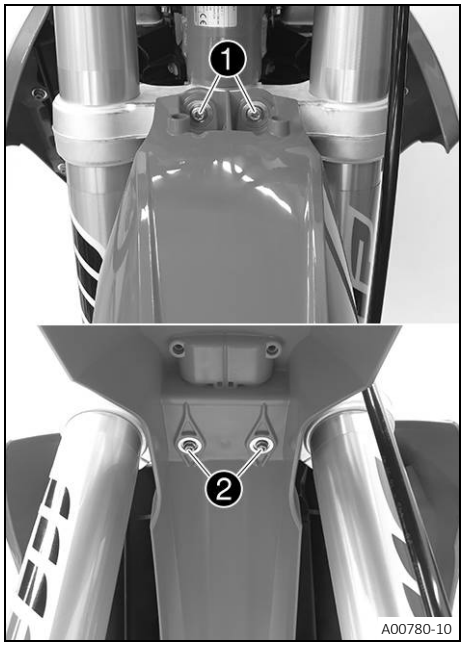

Main work

– Position front fender. Mount and tighten screws ❶ and ❷.

Guideline

Remaining screws, chassis	M6	10 Nm (7.4 lbf ft)

Finishing work

– Install the start number plate. (📖 p. 52)

11.18 Removing the shock absorber

Preparatory work

– Raise the motorcycle with a lift stand. (p. 44)

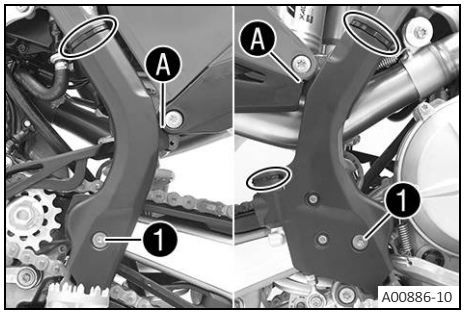

Main work

– Remove the cable ties.
– Remove screws ❶ along with the washers.
– Detach the frame protector in area Ⓐ and take it off.

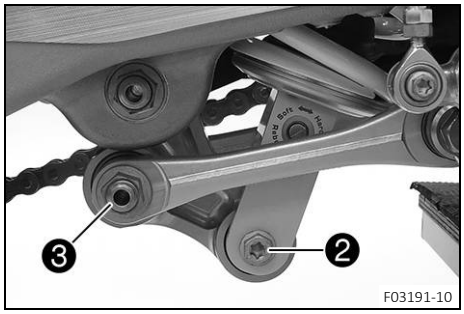

– Remove screw ❷.
– Remove fitting ❸.

> **Info**
> Raise the swingarm slightly to be able to remove the screws more easily.

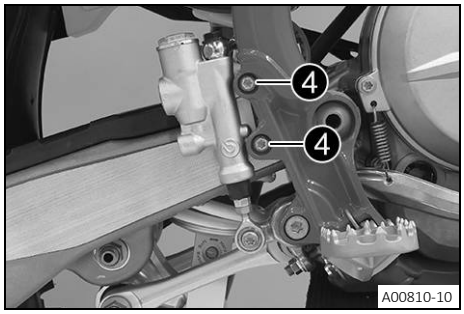

– Remove screws ❹.
– Pull off foot brake cylinder from the push rod.

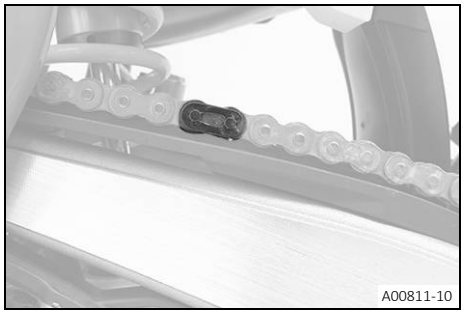

– Remove the connecting link of the chain.
– Take off the chain.

> **Info**
> Cover the components to protect them against damage.

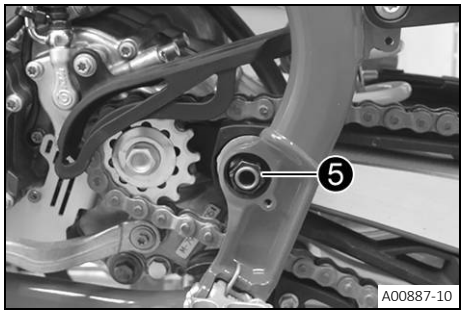

– Remove nut ❺ and the swingarm pivot.
– Push the link fork back and secure it against falling over.

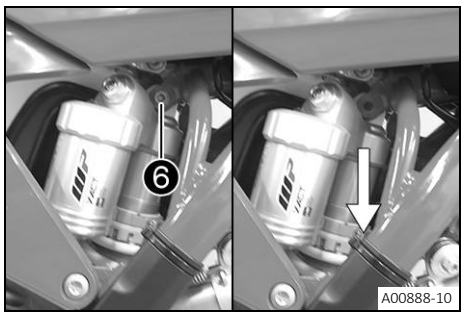

– Hold the shock absorber and remove screw ❻.
– Remove the shock absorber carefully at the bottom.

11.19 Installing the shock absorber

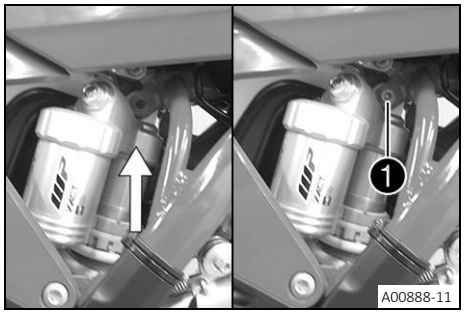

Main work

– Carefully position the shock absorber into the vehicle from the bottom.
– Mount and tighten screw ❶.

Guideline

Screw, top shock absorber	M10	60 Nm (44.3 lbf ft) **Loctite®2701™**

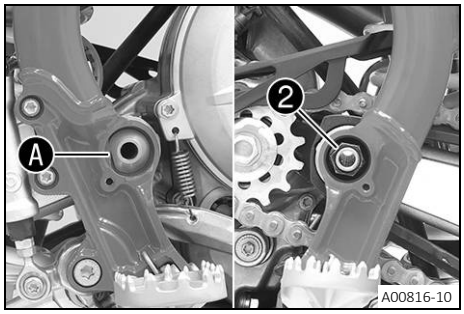

– Position the link fork and mount the swingarm pivot.

Info
Pay attention to flat area Ⓐ.

– Mount and tighten nut ❷.

Guideline

Nut, fork pivot	M16x1.5	100 Nm (73.8 lbf ft)

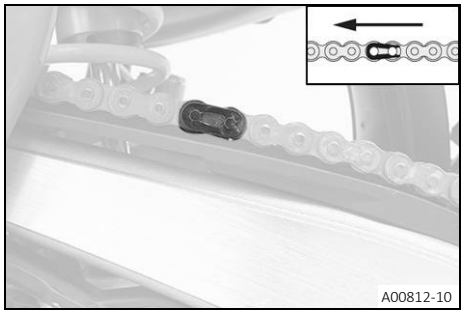

– Mount the chain.
– Connect the chain with connecting link ❸.

Guideline

The closed side of the chain joint lock must face in the direction of travel.

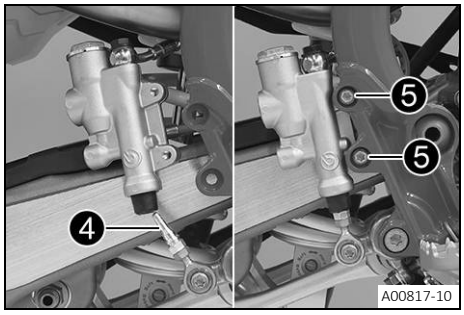

– Position the foot brake cylinder.

✓ Push rod ❹ engages in the foot brake cylinder.

Info
Ensure that the dust boot is correctly seated.

– Mount and tighten screws ❺.

Guideline

Remaining screws, chassis	M6	10 Nm (7.4 lbf ft)

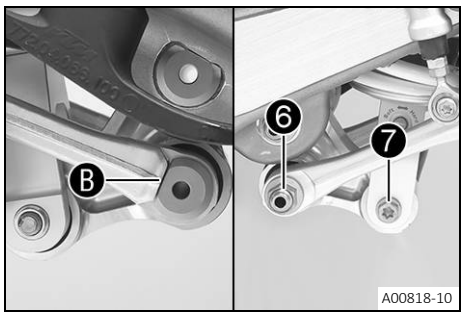

– Position the angle lever and linkage lever.
– Mount and tighten fitting ❻.

Guideline

Nut, linkage lever on angle lever	M14x1.5	60 Nm (44.3 lbf ft)

Info
Pay attention to flat area Ⓑ.

– Mount and tighten screw ❼.

Guideline

Screw, bottom shock absorber	M10	60 Nm (44.3 lbf ft) **Loctite®2701™**

Info
Raise the link fork slightly to be able to mount the screw more easily.

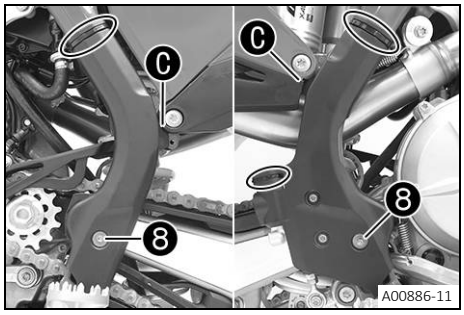

– Attach the frame protector in area Ⓒ and position it.
– Mount and tighten screws ❽ with the washers.

Guideline

Screw, frame protector	M5	3 Nm (2.2 lbf ft)

– Mount the new cable ties.

Finishing work
– Check the free travel of the foot brake lever. (📖 p. 81)
– Remove the motorcycle from the lift stand. (📖 p. 44)

11.20 Removing the seat

Caution
Danger of burns The voltage regulator gets very hot when the vehicle is driven.
– Allow the voltage regulator to cool down before performing any work.

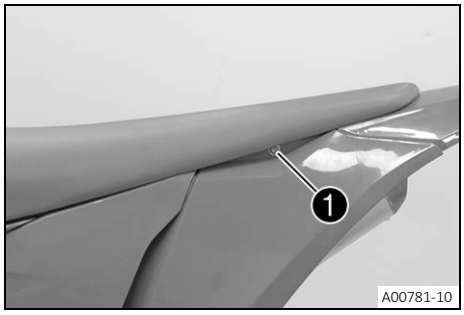

– Remove screw ❶.

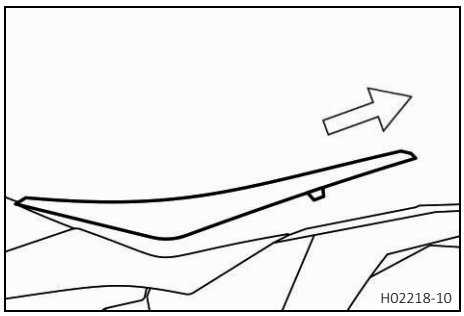

– Raise the rear of the seat, pull the seat back, and lift it off.

11.21 Mounting the seat

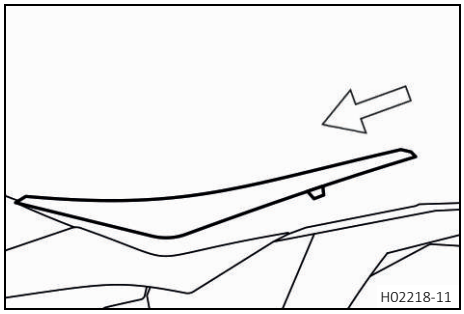

– Mount the front of the seat on the collar bushing of the fuel tank, lower the seat at the rear, and push the seat forward.

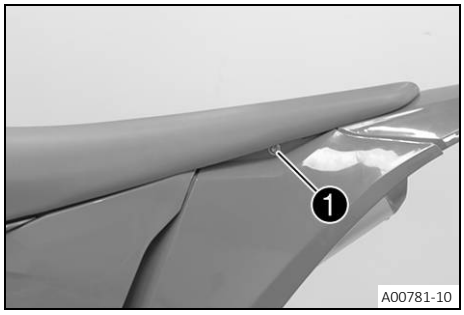

– Mount and tighten screw 1.

Guideline

Screw, rear seat fixing	M6	6 Nm (4.4 lbf ft)

11.22 Removing the air filter box cover

Condition

The air filter box cover is secured.

– Remove the seat. (📖 p. 56)

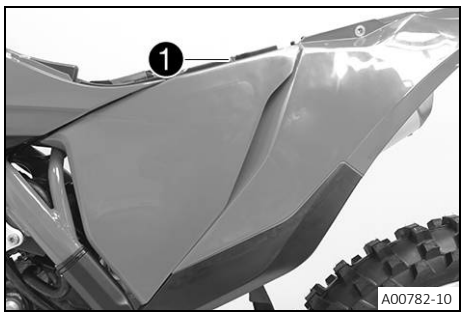

– Remove screw 1.

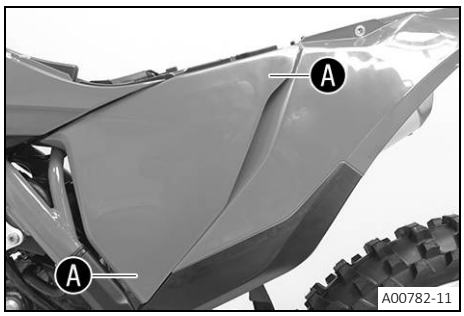

– Pull off the air filter box cover in area Ⓐ sideways and take off toward the front.

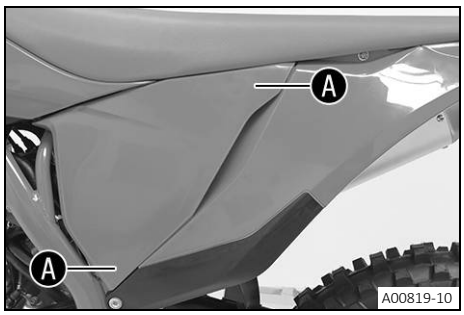

Condition

The air filter box cover is not secured.

– Pull off the air filter box cover in area Ⓐ sideways and take off toward the front.

11.23 Installing the air filter box cover

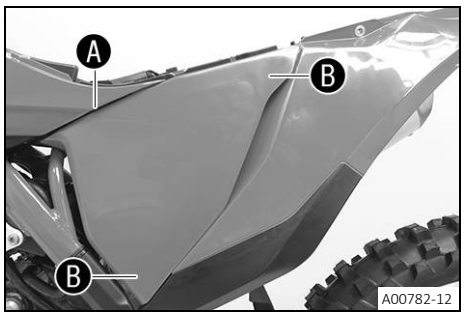

Condition

The air filter box cover is secured.

– Insert the air filter box cover in area Ⓐ and clip it into area Ⓑ.

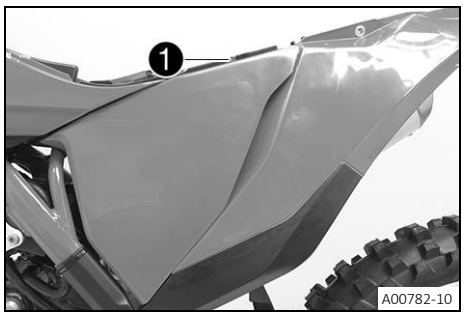

– Mount and tighten screw ❶.

Guideline

Screw, air filter box cover	**EJOT PT®** K60x20-Z	3 Nm (2.2 lbf ft)

– Mount the seat. (📖 p. 57)

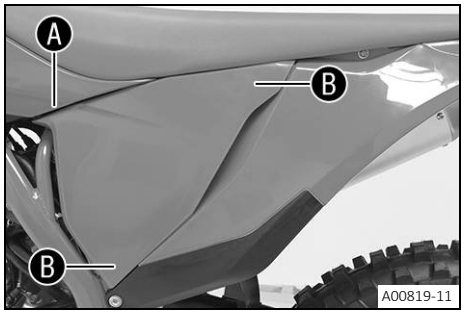

Condition

The air filter box cover is not secured.

– Insert the air filter box cover in area Ⓐ and clip it into area Ⓑ.

11.24 Removing the air filter

Note

Engine damage Unfiltered intake air has a negative effect on the service life of the engine.

Dust and dirt will enter the engine without an air filter.

– Only operate the vehicle if it is equipped with an air filter.

Note

Environmental hazard Hazardous substances cause environmental damage.

– Dispose of oils, grease, filters, fuel, cleaning agents, brake fluid, etc., correctly and in compliance with the applicable regulations.

Preparatory work

– Remove the air filter box cover. (p. 57)



Main work

– Detach retaining tab 1.
– Remove air filter with air filter support.
– Remove air filter from air filter support.

11.25 Cleaning the air filter and air filter box

Note

Environmental hazard Hazardous substances cause environmental damage.

– Dispose of oils, grease, filters, fuel, cleaning agents, brake fluid, etc., correctly and in compliance with the applicable regulations.

Info

Do not clean the air filter with fuel or petroleum since these substances attack the foam.

Preparatory work

– Remove the air filter box cover. (p. 57)
– Remove the air filter. (p. 59)



Main work

– Wash the air filter thoroughly in special cleaning liquid and allow it to dry properly.

Air filter cleaner (p. 131)

Info

Only press the air filter to dry it, never wring it out.

– Oil the dry air filter with a high-grade air filter oil.

Oil for foam air filter (p. 131)

– Clean the air filter box.
– Clean the intake flange and check it for damage and tightness.

Finishing work

– Install the air filter. (p. 60)
– Install the air filter box cover. (p. 58)

11.26 Installing the air filter

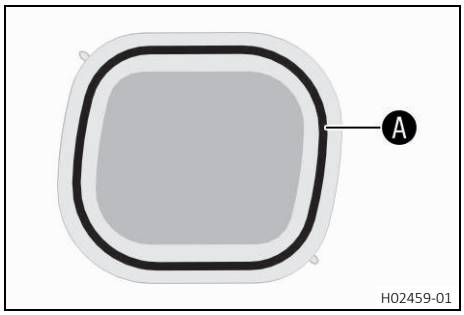

Main work

– Mount the clean air filter on the air filter support.
– Grease the air filter in area A.

Long-life grease (p. 131)

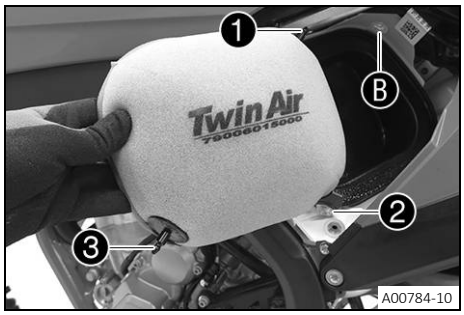

– Insert air filter and position retaining pin 1 in bushing B.
  ✔ The air filter is correctly positioned.
– Insert retaining tab 2.
  ✔ Retaining pin 3 is secured by retaining tab 2.

Info
If the air filter is not mounted correctly, dust and dirt may enter the engine and result in damage.

Finishing work

– Install the air filter box cover. (p. 58)

11.27 Preparing air filter box cover for securing

Preparatory work

– Remove the air filter box cover. (p. 57)

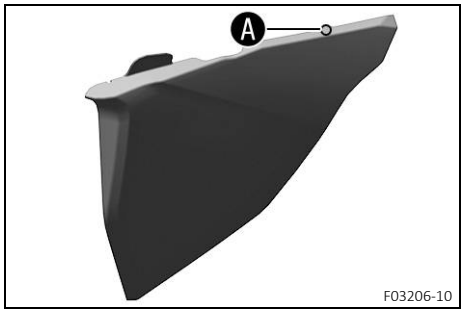

Main work

– Drill a hole at marking A.

  Guideline

Diameter	6 mm (0.24 in)

Finishing work

– Install the air filter box cover. (p. 58)

11.28 Removing the main silencer

Warning

Danger of burns The exhaust system gets very hot when the vehicle is driven.

– Allow the exhaust system to cool down before performing any work on the vehicle.

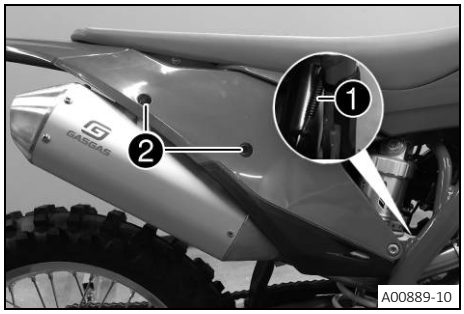

– Detach spring ❶.

Spring hook (50305017000C1)

– Remove screws ❷ with the washers and take off the main silencer.

11.29 Installing the main silencer

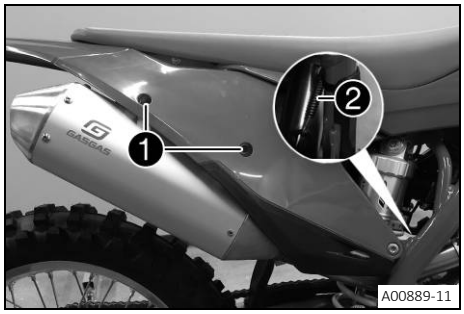

– Position the main silencer.
– Mount screws ❶ with the washers, but do not tighten yet.
– Attach spring ❷.

Spring hook (50305017000C1)

– Tighten screws ❶.

Guideline

Remaining screws, chassis	M6	10 Nm (7.4 lbf ft)

11.30 Changing the glass fiber yarn filling of the main silencer

Warning

Danger of burns The exhaust system gets very hot when the vehicle is driven.

– Allow the exhaust system to cool down before performing any work on the vehicle.

Info

Over time, the fibers of the glass fiber yarn filling escape and the damper "burns" out.
Not only is the noise level higher, but the performance characteristics change.

Preparatory work

– Remove main silencer. (📖 p. 61)

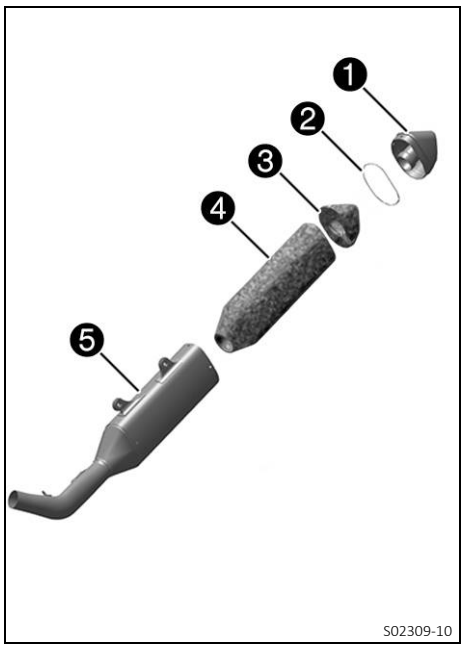

Main work

- Remove all the screws on the main silencer.
- Take off silencer cap ❶ and O-ring ❷.
- Pull glass fiber yarn filling ❸ out of the silencer cap.
- Pull glass fiber yarn filling ❹ from the inner tube.
- Clean the parts that need to be reinstalled and check for damage.
- Mount new glass fiber yarn filling ❹ on the inner tube.
- Position new glass fiber yarn filling ❸ in the silencer cap.
- Insert O-ring and silencer cap into outer tube ❺.
- Mount and tighten all of the screws.

  Guideline

Screws on main silencer	M5	7 Nm (5.2 lbf ft)

Finishing work

- Install the main silencer. (📖 p. 61)

11.31 Removing the fuel tank

Danger

Fire hazard Fuel is highly flammable.

The fuel in the fuel tank expands when warm and can escape if overfilled.

- Do not fuel the vehicle in the vicinity of open flames or lit cigarettes.
- Switch off the engine for refueling.
- Make sure that no fuel is spilled; particularly not on hot parts of the vehicle.
- If any fuel is spilled, wipe it off immediately.
- Observe the specifications for refueling.

Warning

Danger of poisoning Fuel is poisonous and a health hazard.

- Avoid skin, eye and clothing contact with fuel.
- Immediately consult a doctor if you swallow fuel.
- Do not inhale fuel vapors.
- In case of skin contact, rinse the affected area with plenty of water.
- Rinse the eyes thoroughly with water, and consult a doctor in case of fuel contact with the eyes.
- Change your clothing in case of fuel spills on them.
- Keep fuels correctly in a suitable canister, and out of the reach of children.

Preparatory work

- Remove the seat. (📖 p. 56)

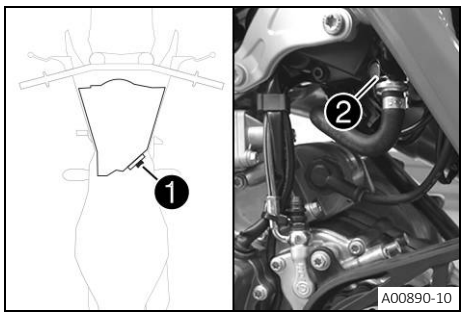

Main work
(MC)

– Unplug connector ❶ of the fuel pump.
– Clean quick release coupling ❷ thoroughly with compressed air.

Info
Under no circumstances should dirt enter into the fuel line. Dirt in the fuel line clogs the injection valve!

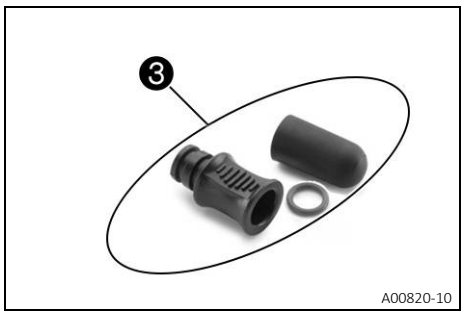

– Disconnect the quick release coupling.

Info
Remaining fuel may flow out of the fuel hose.

– Mount wash cap set ❸.

Wash cap set (81212016100)

– Pull the fuel tank breather hose off the fuel tank lid.

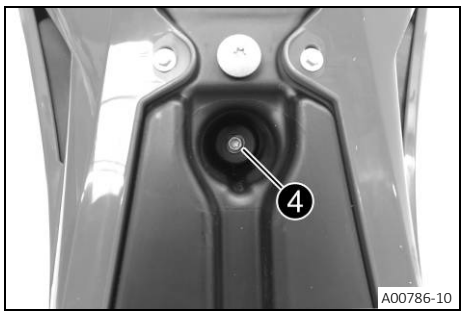

– Remove screw ❹ with the rubber bushing.

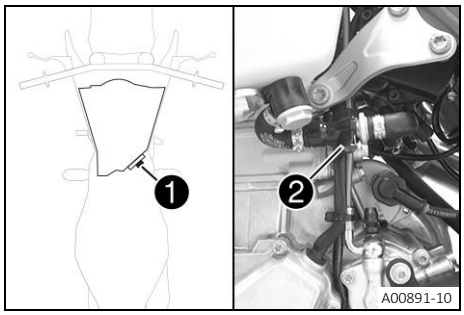

(EX)

– Unplug connector ❶ of the fuel pump.
– Clean quick release coupling ❷ thoroughly with compressed air.

Info
Under no circumstances should dirt enter into the fuel line. Dirt in the fuel line clogs the injection valve!

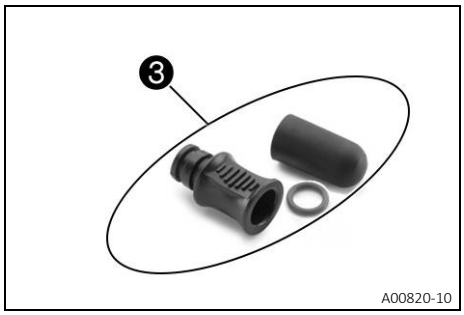

– Disconnect the quick release coupling.

Info
Remaining fuel may flow out of the fuel hose.

– Mount wash cap set ❸.

Wash cap set (81212016100)

– Pull the fuel tank breather hose off the fuel tank lid.



– Remove screw ❹ with the rubber bushing.

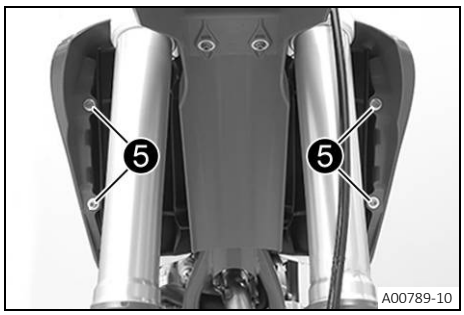

– Remove screws ❺ with the collar bushings.

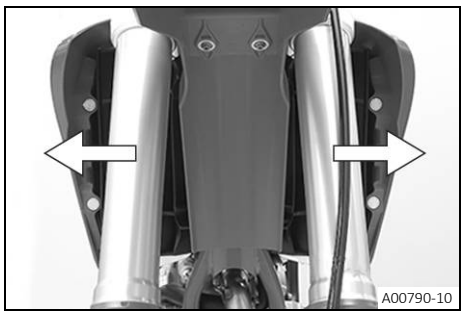

– Pull both spoilers laterally off the radiator and lift off the fuel tank.

11.32 Installing the fuel tank

Danger

Fire hazard Fuel is highly flammable.

The fuel in the fuel tank expands when warm and can escape if overfilled.

– Do not fuel the vehicle in the vicinity of open flames or lit cigarettes.
– Switch off the engine for refueling.
– Make sure that no fuel is spilled; particularly not on hot parts of the vehicle.
– If any fuel is spilled, wipe it off immediately.
– Observe the specifications for refueling.

Warning

Danger of poisoning Fuel is poisonous and a health hazard.

– Avoid skin, eye and clothing contact with fuel.
– Immediately consult a doctor if you swallow fuel.
– Do not inhale fuel vapors.
– In case of skin contact, rinse the affected area with plenty of water.
– Rinse the eyes thoroughly with water, and consult a doctor in case of fuel contact with the eyes.
– Change your clothing in case of fuel spills on them.

Main work

– Check the throttle cable routing. (p. 71)

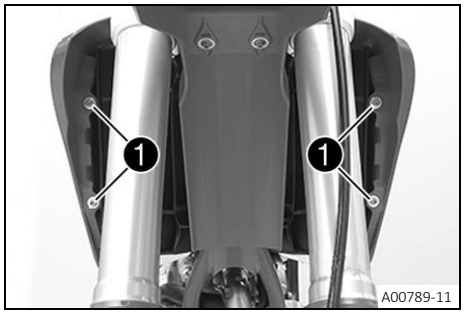

– Position the fuel tank and fit the two spoilers laterally to the radiator.
– Make sure that no cables or throttle cables are trapped or damaged.
– Attach the fuel tank breather hose to the fuel tank lid.
– Mount and tighten screws ❶ with the collar bushings.

Guideline

Screw, fuel tank spoiler on radiator	M6	6 Nm (4.4 lbf ft)

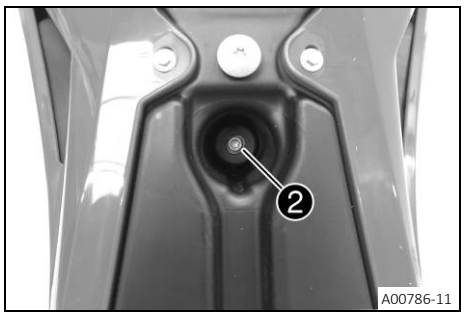

(MC)

– Mount and tighten screw ❷ with the rubber bushing.

Guideline

Remaining screws, chassis	M6	10 Nm (7.4 lbf ft)

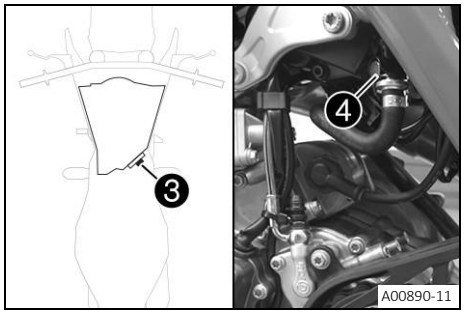

– Plug in connector ❸ for the fuel pump.
– Remove the wash cap set. Clean the quick release coupling thoroughly with compressed air.

Info
Under no circumstances should dirt enter into the fuel line. Dirt in the fuel line clogs the injection valve!

– Spray silicone spray onto a lint-free cleaning cloth and lightly lubricate the O-ring of the quick-release coupling.

Silicone spray (p. 131)

– Join quick release coupling ❹.

Info
Route the cable and fuel line at a safe distance from the exhaust system.

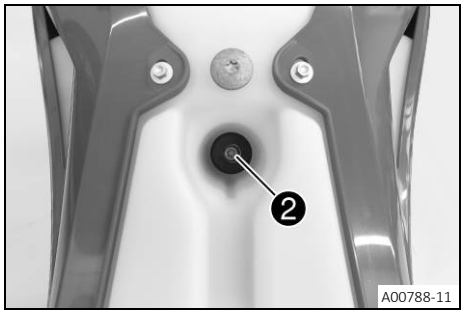

(EX)

– Mount and tighten screw ❷ with the rubber bushing.

Guideline

Remaining screws, chassis	M6	10 Nm (7.4 lbf ft)

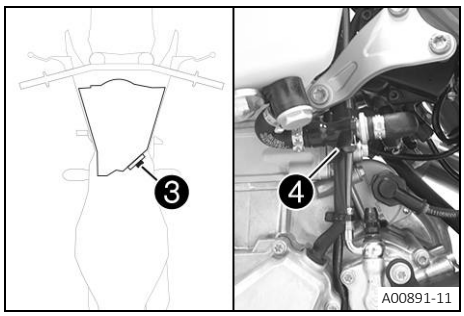

– Plug in connector ❸ for the fuel pump.
– Remove the wash cap set. Clean the quick release coupling thoroughly with compressed air.

Info
Under no circumstances should dirt enter into the fuel line. Dirt in the fuel line clogs the injection valve!

– Spray silicone spray onto a lint-free cleaning cloth and lightly lubricate the O-ring of the quick-release coupling.

Silicone spray (📖 p. 131)

– Join quick release coupling ❹.

Info
Route the cable and fuel line at a safe distance from the exhaust system.

Finishing work
– Mount the seat. (📖 p. 57)

11.33 Checking for chain dirt accumulation

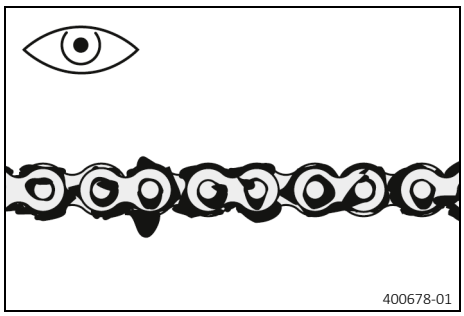

– Check the chain for coarse dirt accumulation.
  » If the chain is very dirty:
    – Clean the chain. (📖 p. 66)

11.34 Cleaning the chain

Warning
Danger of accidents Lubricants on the tires reduces the road grip.
– Remove lubricants from the tires using a suitable cleaning agent.

Warning
Danger of accidents Oil or grease on the brake discs reduces the braking effect.
– Always keep the brake discs free of oil and grease.
– Clean the brake discs with brake cleaner when necessary.

Note
Environmental hazard Hazardous substances cause environmental damage.
– Dispose of oils, grease, filters, fuel, cleaning agents, brake fluid, etc., correctly and in compliance with the applicable regulations.

Info
The service life of the chain depends largely on its maintenance.

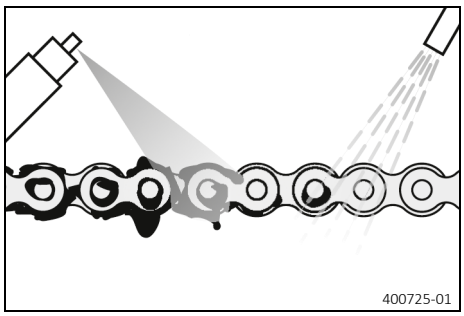

Preparatory work
– Raise the motorcycle with a lift stand. (p. 44)

Main work
– Rinse off loose dirt with a soft jet of water.
– Remove old grease residue with chain cleaner.

Chain cleaner (p. 131)

– After drying, apply chain spray.

Off-road chain spray (p. 131)

Finishing work
– Remove the motorcycle from the lift stand. (p. 44)

11.35 Checking the chain tension

Warning

Danger of accidents Incorrect chain tension damages components and results in accidents.

If the chain is tensioned too much, the chain, engine sprocket, rear sprocket, transmission and rear wheel bearings wear more quickly. Some components may break if overloaded.
If the chain is too loose, the chain may fall off the engine sprocket or the rear sprocket. As a result, the rear wheel locks or the engine will be damaged.

– Check the chain tension regularly.
– Set the chain tension in accordance with the specification.

Preparatory work
– Raise the motorcycle with a lift stand. (p. 44)

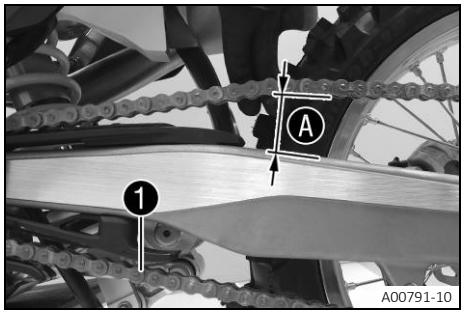

Main work
– Pull the chain at the end of the chain sliding piece upward to measure chain tension Ⓐ.

Info

Lower chain section ❶ must be taut.
Chain wear is not always even, so you should repeat this measurement at different chain positions.

Chain tension	55 … 58 mm (2.17 … 2.28 in)

» If the chain tension does not meet the specification:
– Adjust the chain tension. (p. 68)

Finishing work
– Remove the motorcycle from the lift stand. (p. 44)

11.36 Adjusting the chain tension

Warning

Danger of accidents Incorrect chain tension damages components and results in accidents.

If the chain is tensioned too much, the chain, engine sprocket, rear sprocket, transmission and rear wheel bearings wear more quickly. Some components may break if overloaded.

If the chain is too loose, the chain may fall off the engine sprocket or the rear sprocket. As a result, the rear wheel locks or the engine will be damaged.

– Check the chain tension regularly.
– Set the chain tension in accordance with the specification.

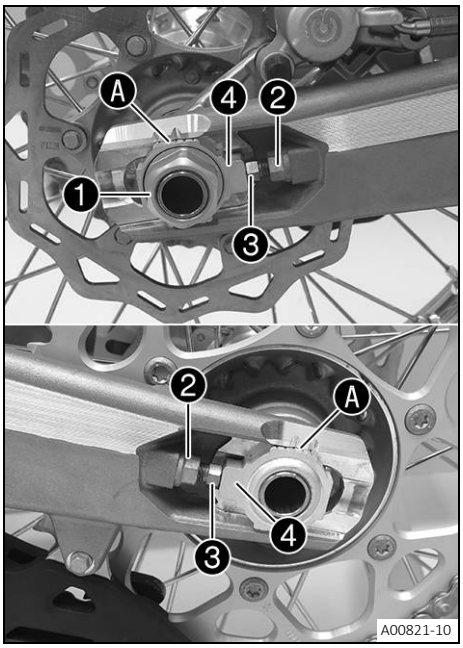

Preparatory work

– Raise the motorcycle with a lift stand. (📖 p. 44)
– Check the chain tension. (📖 p. 67)

Main work

– Loosen nut ❶.
– Loosen nuts ❷.
– Adjust the chain tension by turning adjusting screws ❸ left and right.

  Guideline

Chain tension	55 … 58 mm (2.17 … 2.28 in)
Turn adjusting screws ❸ on the left and right so that the markings on the left and right chain adjusters are in the same position relative to reference marks Ⓐ. The rear wheel is then correctly aligned.	

– Tighten nuts ❷.
– Make sure that chain adjusters ❹ are fitted correctly on adjusting screws ❸.
– Tighten nut ❶.

  Guideline

Nut, rear wheel spindle	M25x1.5	80 Nm (59 lbf ft)

Info

The wide adjustment range of the chain adjusters (32 mm (1.26 in)) enables different secondary ratios with the same chain length.

Chain adjusters ❹ can be turned by 180°.

Finishing work

– Remove the motorcycle from the lift stand. (📖 p. 44)

11.37 Checking the chain, rear sprocket, engine sprocket, and chain guide

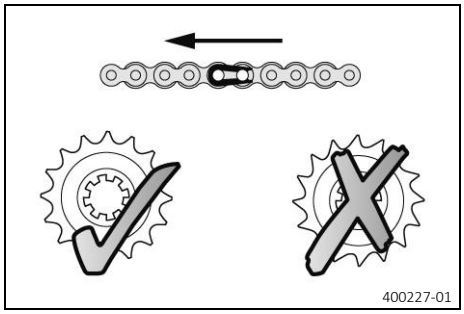

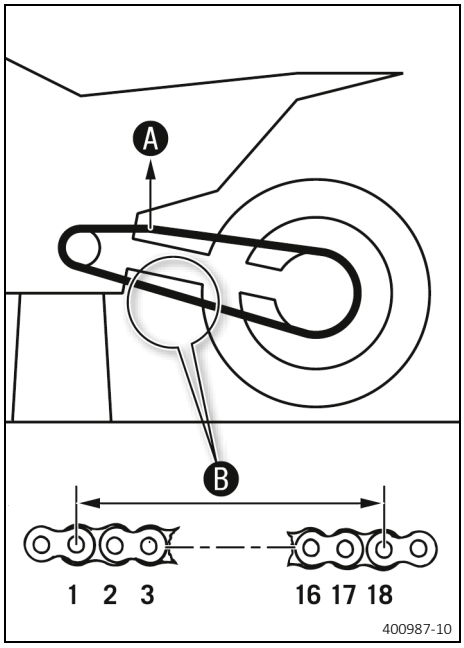

Preparatory work

– Raise the motorcycle with a lift stand. (p. 44)

Main work

– Shift the transmission into neutral.
– Check the chain, rear sprocket and engine sprocket for wear.
  » If the chain, rear sprocket or engine sprocket is worn:
    – Change the drivetrain kit.

Info
The engine sprocket, rear sprocket and chain should always be replaced together.

– Pull on the top section of the chain with the specified weight Ⓐ.

Guideline

Weight, chain wear measurement	10 … 15 kg (22 … 33 lb.)

– Measure distance Ⓑ of 18 chain rollers in the lower chain section.

Info
Chain wear is not always even, so you should repeat this measurement at different chain positions.

Maximum distance Ⓑ from 18 chain rollers at the longest chain section	272 mm (10.71 in)

  » If distance Ⓑ is greater than the specified measurement:
    – Change the drivetrain kit.

Info
When a new chain is mounted, the rear sprocket and engine sprocket should also be changed.
New chains wear out faster on an old, worn rear sprocket or engine sprocket.

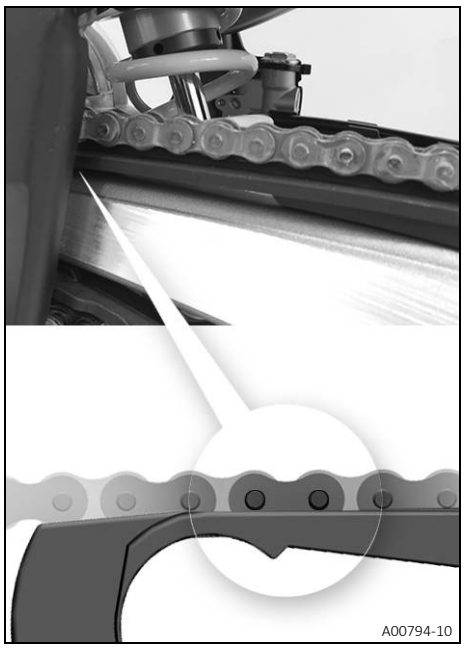

– Check the chain sliding guard for wear.
  » If the lower edge of the chain pins is in line with, or below, the chain sliding guard:
    – Change the chain sliding guard.
– Check that the chain sliding guard is firmly seated.
  » If the chain sliding guard is loose:
    – Tighten the screws on the chain sliding guard.

    Guideline

Screw, chain sliding guard	M6	6 Nm (4.4 lbf ft) **Loctite®243™**

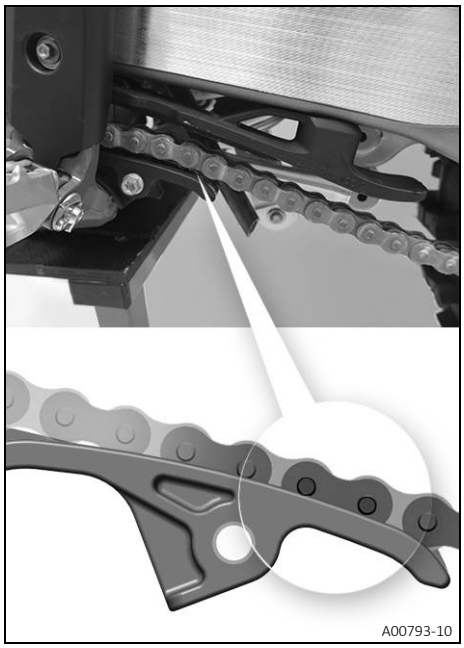

– Check the chain sliding piece for wear.
  » If the lower edge of the chain pins is in line with or below the chain sliding piece:
    – Change the chain sliding piece.
– Check that the chain sliding piece is firmly seated.
  » If the chain sliding piece is loose:
    – Tighten the screw on the chain sliding piece.

    Guideline

Screw, chain sliding piece	M8	15 Nm (11.1 lbf ft)

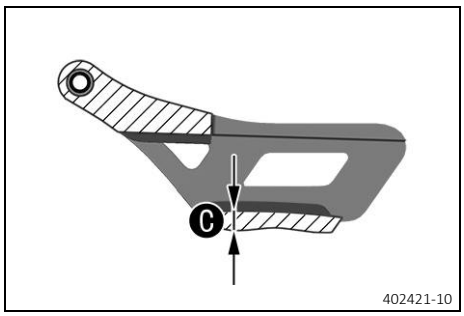

– Check the chain guide with a slide gauge for dimension C.

Minimum thickness C of the chain guide	6 mm (0.24 in)

  » If the measured value is less than the specification:
    – Change the chain guide.

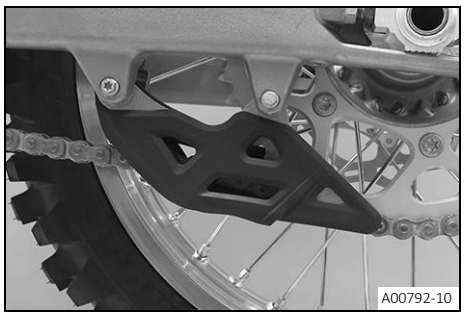

– Check that the chain guide is firmly seated.
  » If the chain guide is loose:
    – Tighten the screws on the chain guide.
      Guideline

Remaining screws, chassis	M6	10 Nm (7.4 lbf ft)

Finishing work
– Remove the motorcycle from the lift stand. (📖 p. 44)

11.38 Checking the frame

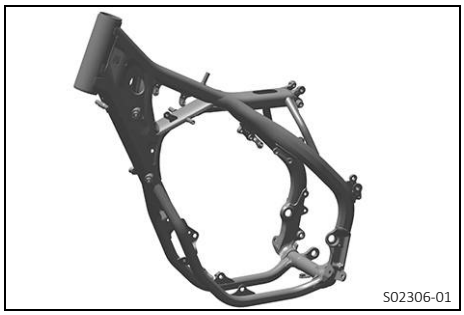

– Check the frame for damage, cracks, and deformation.
  » If the frame shows signs of damage, cracks, or deformation:
    – Change the frame.
      Guideline

Repairs on the frame are not permitted.

11.39 Checking the link fork

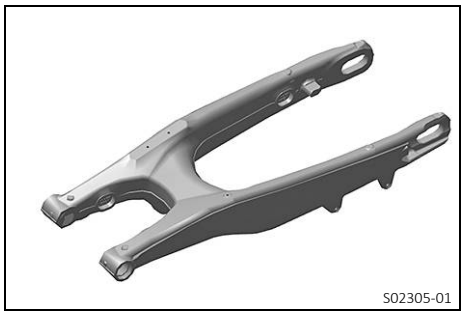

– Check the link fork for damage, cracks, and deformation.
  » If the link fork shows signs of damage, cracks, or deformation:
    – Change the link fork.

Info
Always replace a damaged link fork. GASGAS Motorcycles does not permit repairing link forks.

11.40 Checking the throttle cable routing

Preparatory work
– Remove the seat. (📖 p. 56)
– Remove the fuel tank. (📖 p. 62)



Main work

– Check the throttle cable routing.

Both throttle cables must be routed, side by side, on the back of the handlebars and above the fuel tank bracket, to the throttle valve body. Both throttle cables must be secured behind the rubber strap of the fuel tank support.

» If the throttle cable is not routed as specified:

– Correct the throttle cable routing.

Finishing work

– Install the fuel tank. (p. 64)

– Mount the seat. (p. 57)

11.41 Checking the rubber grips

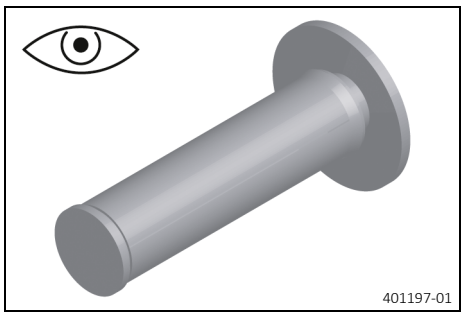

– Check the rubber grips on the handlebar for damage, wear, and looseness.

Info

The rubber grips are vulcanized onto a sleeve on the left and onto the handle tube of the throttle grip on the right. The left sleeve is clamped onto the handlebar.
The rubber grip can only be replaced with the sleeve or the throttle tube.

» If a rubber grip is damaged or worn:

– Change the rubber grip.

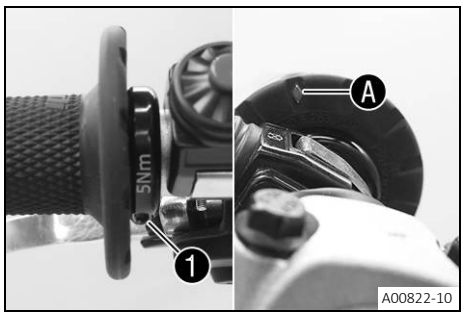

– Check that screw 1 is firmly seated.

Guideline

Screw, fixed grip	M4	5 Nm (3.7 lbf ft) **Loctite®243™**

Diamond A must be positioned visibly as shown in the figure.

11.42 Adjusting the basic position of the clutch lever

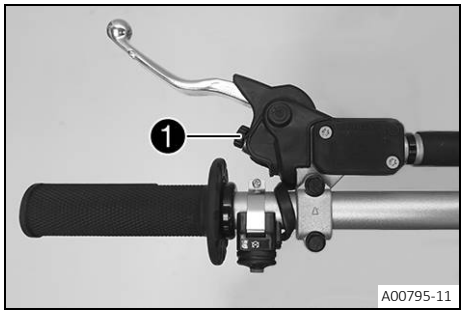

– Adjust the basic position of the clutch lever to your hand size by turning adjusting screw ❶.

Info

Turn the adjusting screw counterclockwise to decrease the distance between the clutch lever and the handlebar.
Turn the adjusting screw clockwise to increase the distance between the clutch lever and the handlebar.
The range of adjustment is limited.
Only turn the adjusting screw by hand, and do not use force.
Do not make any adjustments while riding.

11.43 Checking/correcting the fluid level of the hydraulic clutch

Warning

Skin irritation Brake fluid causes skin irritation.

– Keep brake fluid out of the reach of children.
– Wear suitable protective clothing and safety glasses.
– Do not allow brake fluid to come into contact with the skin, the eyes or clothing.
– Consult a doctor immediately if brake fluid has been swallowed.
– Rinse the affected area with plenty of water in the event of contact with the skin.
– Rinse eyes thoroughly with water immediately and consult a doctor if brake fluid comes into contact with the eyes.
– If brake fluid spills on to your clothing, change the clothing.

Info

The fluid level rises with increasing wear of the clutch facing discs.
Never use DOT 5 brake fluid. It is silicone-based and purple in color. Oil seals and clutch lines are not designed for DOT 5 brake fluid.
Avoid contact between brake fluid and painted parts. Brake fluid attacks paint.
Only use clean brake fluid from a sealed container.

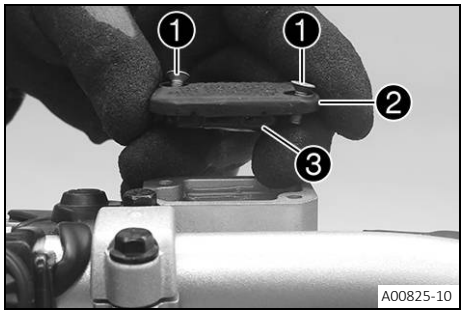

– Move the clutch fluid reservoir mounted on the handlebar to a horizontal position.
– Remove screws ❶.
– Remove cover ❷ with membrane ❸.
– Check the fluid level.

Fluid level below container rim	4 mm (0.16 in)

» If the fluid level does not meet specifications:
– Correct the fluid level of the hydraulic clutch.

Brake fluid DOT 4 / DOT 5.1 (📖 p. 129)

– Position the cover with the membrane. Mount and tighten the screws.

Info

Clean up overflowed or spilled brake fluid immediately with water.

11.44 Changing the hydraulic clutch fluid

Warning

Skin irritation Brake fluid causes skin irritation.

- Keep brake fluid out of the reach of children.
- Wear suitable protective clothing and safety glasses.
- Do not allow brake fluid to come into contact with the skin, the eyes or clothing.
- Consult a doctor immediately if brake fluid has been swallowed.
- Rinse the affected area with plenty of water in the event of contact with the skin.
- Rinse eyes thoroughly with water immediately and consult a doctor if brake fluid comes into contact with the eyes.
- If brake fluid spills on to your clothing, change the clothing.

Note

Environmental hazard Hazardous substances cause environmental damage.

- Dispose of oils, grease, filters, fuel, cleaning agents, brake fluid, etc., correctly and in compliance with the applicable regulations.

Info

The fluid level rises with increasing wear of the clutch facing discs.
Never use DOT 5 brake fluid. It is silicone-based and purple in color. Oil seals and clutch lines are not designed for DOT 5 brake fluid.
Avoid contact between brake fluid and painted parts. Brake fluid corrodes paint.
Only use clean brake fluid from a sealed container.

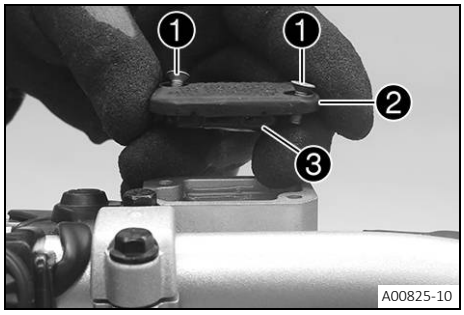

- Move the hydraulic clutch fluid reservoir mounted on the handlebar into a horizontal position.
- Remove screws ❶.
- Take off cover ❷ with membrane ❸.

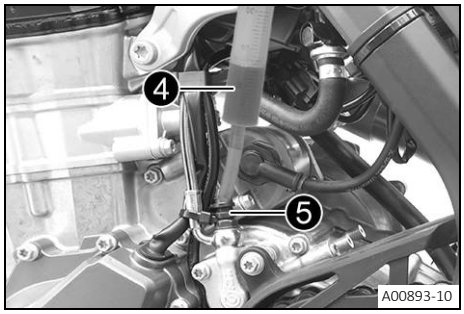

- Fill bleeding syringe ❹ with the appropriate hydraulic fluid.

Syringe (50329050000)
Brake fluid DOT 4 / DOT 5.1 (📖 p. 129)

- On the clutch slave cylinder, remove the protection cap and mount bleeding syringe ❹ with an appropriate hose piece on bleeder screw ❺.
- Only loosen bleeder screw ❺ on the clutch slave cylinder until filling is possible.

Info

Use water to immediately clean up any brake fluid that has overflowed or spilled.
Avoid contact between brake fluid and painted parts. Brake fluid corrodes paint.
Only use clean brake fluid from a sealed container.

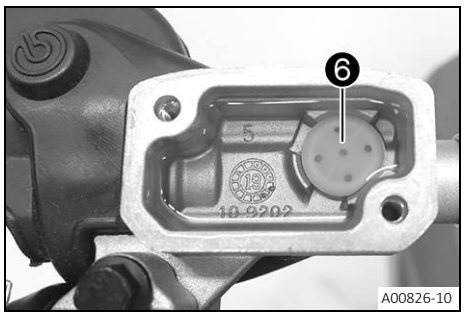

– Now press the fluid into the system until it emerges from hole ❻ of the master cylinder without bubbles.
– Occasionally extract the fluid from the master cylinder reservoir to prevent overflowing.
– Tighten the bleeder screw and remove the bleeding syringe with the hose. Mount the protection cap.
– Correct the fluid level of the hydraulic clutch.

  Guideline

Fluid level below container rim	4 mm (0.16 in)

– Position the cover with the membrane. Mount and tighten the screws.

12.1 Checking the free travel of the hand brake lever

Warning

Danger of accidents The brake system fails in the event of overheating.

If there is no free travel on the hand brake lever, pressure builds up on the front brake circuit.

– Set the free travel on the hand brake lever in accordance with the specification.

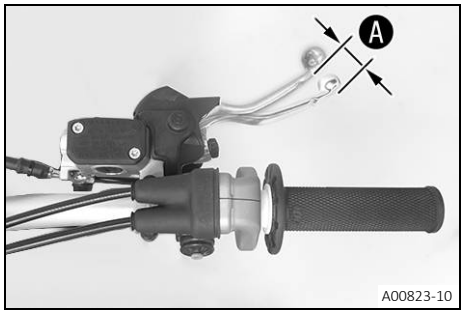

– Push the hand brake lever forward and check free travel Ⓐ.

Free travel of hand brake lever	≥ 3 mm (≥ 0.12 in)

» If the free travel does not match the specification:

– Adjust the basic position of the hand brake lever. (📖 p. 76)

12.2 Adjusting the basic position of the hand brake lever

Preparatory work

– Check the free travel of the hand brake lever. (📖 p. 76)

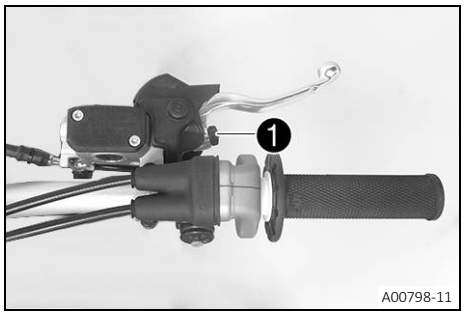

Main work

– Adjust the basic position of the hand brake lever to your hand size by turning adjusting screw ❶.

Info

Turn the adjusting screw clockwise to increase the distance between the hand brake lever and the handlebar.
Turn the adjusting screw counterclockwise to decrease the distance between the hand brake lever and the handlebar.
The range of adjustment is limited.
Only turn the adjusting screw by hand, and do not use force.
Do not make any adjustments while riding.

12.3 Checking the brake discs

Warning

Danger of accidents Worn-out brake discs reduce the braking effect.

– Make sure that worn-out brake discs are replaced immediately. (Your authorized GASGAS Motorcycles workshop will be glad to help.)

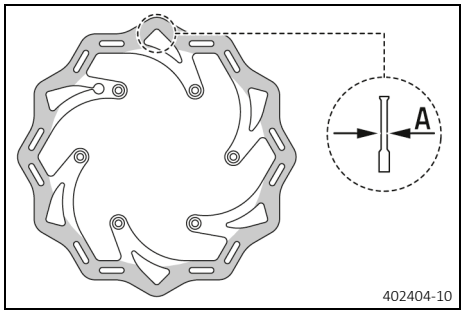

– Check the front and rear brake disc thickness at multiple points for the dimension Ⓐ.

Info

Wear reduces the thickness of the brake disc around the contact surface of the brake linings.

Brake discs - wear limit	
front	2.5 mm (0.098 in)

rear	3.5 mm (0.138 in)

» If the brake disc thickness is less than the specification:
– Change the front brake disc.
– Change the rear brake disc.

– Check the front and rear brake discs for damage, cracking, and deformation.
» If the brake disc exhibits damage, cracking, or deformation:
– Change the front brake disc.
– Change the rear brake disc.

12.4 Checking the front brake fluid level

Warning
Danger of accidents An insufficient brake fluid level will cause the brake system to fail.
If the brake fluid level drops below the specified marking or the specified value, the brake system is leaking or the brake linings are worn down.
– Check the brake system and do not continue riding until the problem is eliminated. (Your authorized GAS-GAS Motorcycles workshop will be glad to help.)

Warning
Danger of accidents Old brake fluid reduces the braking effect.
– Make sure that brake fluid for the front and rear brake is changed in accordance with the service schedule. (Your authorized GASGAS Motorcycles workshop will be glad to help.)

Preparatory work
– Check the front brake linings. (p. 79)

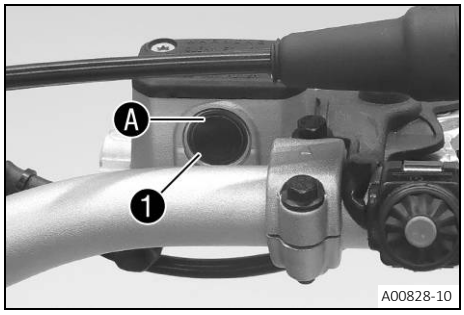

Main work
– Move the brake reservoir mounted on the handlebar to a horizontal position.
– Check the brake fluid level in level viewer 1.
» If the brake fluid level has dropped below the marking A:
– Add front brake fluid. (p. 77)

12.5 Adding front brake fluid

Warning
Danger of accidents An insufficient brake fluid level will cause the brake system to fail.
If the brake fluid level drops below the specified marking or the specified value, the brake system is leaking or the brake linings are worn down.
– Check the brake system and do not continue riding until the problem is eliminated. (Your authorized GAS-GAS Motorcycles workshop will be glad to help.)

Warning

Skin irritation Brake fluid causes skin irritation.

– Keep brake fluid out of the reach of children.
– Wear suitable protective clothing and safety glasses.
– Do not allow brake fluid to come into contact with the skin, the eyes or clothing.
– Consult a doctor immediately if brake fluid has been swallowed.
– Rinse the affected area with plenty of water in the event of contact with the skin.
– Rinse eyes thoroughly with water immediately and consult a doctor if brake fluid comes into contact with the eyes.
– If brake fluid spills on to your clothing, change the clothing.

Warning

Danger of accidents Old brake fluid reduces the braking effect.

– Make sure that brake fluid for the front and rear brake is changed in accordance with the service schedule. (Your authorized GASGAS Motorcycles workshop will be glad to help.)

Note

Environmental hazard Hazardous substances cause environmental damage.

– Dispose of oils, grease, filters, fuel, cleaning agents, brake fluid, etc., correctly and in compliance with the applicable regulations.

Info

Never use DOT 5 brake fluid. It is silicone-based and purple in color. Oil seals and brake lines are not designed for DOT 5 brake fluid.
Avoid contact between brake fluid and painted parts. Brake fluid attacks paint.
Only use clean brake fluid from a sealed container.

Preparatory work

– Check the front brake linings. (📖 p. 79)

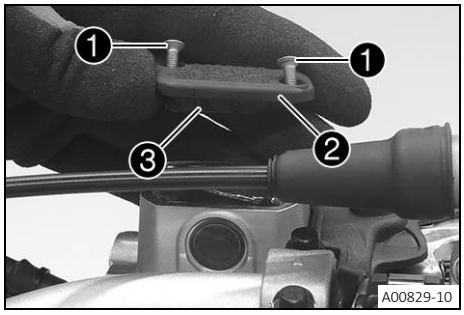

Main work

– Move the brake reservoir mounted on the handlebar to a horizontal position.
– Remove screws ❶.
– Take off cover ❷ with membrane ❸.

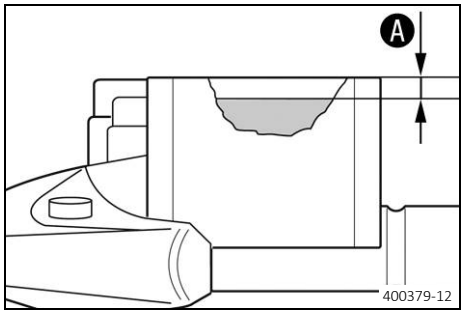

– Add brake fluid to level Ⓐ.

Guideline

Level Ⓐ (brake fluid level below reservoir rim)	5 mm (0.2 in)

Brake fluid DOT 4 / DOT 5.1 (📖 p. 129)

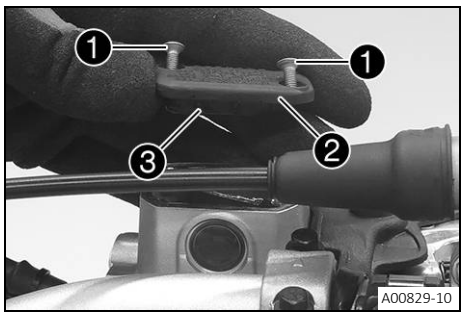

– Position cover ❷ with membrane ❸. Mount and tighten screws ❶.

Info
Clean up overflowed or spilled brake fluid immediately with water.

12.6 Checking the front brake linings

Warning
Danger of accidents Worn-out brake linings reduce the braking effect.
– Ensure that worn-out brake linings are replaced immediately. (Your authorized GASGAS Motorcycles workshop will be glad to help.)

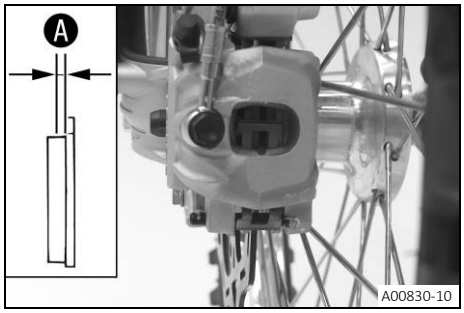

– Check the brake linings for minimum thickness Ⓐ.

Minimum thickness Ⓐ	≥ 1 mm (≥ 0.04 in)

» If the minimum thickness is less than specified:
– Change the brake linings of the front brake. 🔧 (📖 p. 79)

– Check the brake linings for damage and cracking.
» If damage or wear is encountered:
– Change the brake linings of the front brake. 🔧 (📖 p. 79)

12.7 Changing the brake linings of the front brake 🔧

Warning
Danger of accidents Incorrect servicing will cause the brake system to fail.
– Ensure that service work and repairs are performed professionally. (Your authorized GASGAS Motorcycles workshop will be glad to help.)

Warning
Skin irritation Brake fluid causes skin irritation.
– Keep brake fluid out of the reach of children.
– Wear suitable protective clothing and safety glasses.
– Do not allow brake fluid to come into contact with the skin, the eyes or clothing.
– Consult a doctor immediately if brake fluid has been swallowed.
– Rinse the affected area with plenty of water in the event of contact with the skin.
– Rinse eyes thoroughly with water immediately and consult a doctor if brake fluid comes into contact with the eyes.
– If brake fluid spills on to your clothing, change the clothing.

Warning
Danger of accidents Old brake fluid reduces the braking effect.
– Make sure that brake fluid for the front and rear brake is changed in accordance with the service schedule. (Your authorized GASGAS Motorcycles workshop will be glad to help.)

Warning

Danger of accidents Oil or grease on the brake discs reduces the braking effect.

– Always keep the brake discs free of oil and grease.
– Clean the brake discs with brake cleaner when necessary.

Note

Environmental hazard Hazardous substances cause environmental damage.

– Dispose of oils, grease, filters, fuel, cleaning agents, brake fluid, etc., correctly and in compliance with the applicable regulations.

Info

Never use DOT 5 brake fluid. It is silicone-based and purple in color. Oil seals and brake lines are not designed for DOT 5 brake fluid.
Avoid contact between brake fluid and painted parts. Brake fluid attacks paint.
Only use clean brake fluid from a sealed container.

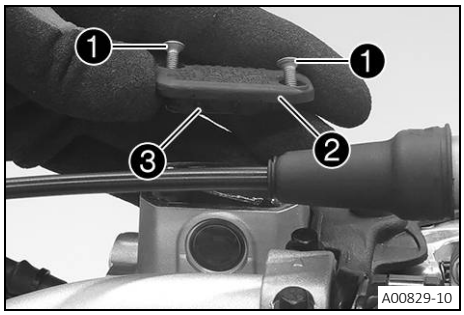

– Move the brake fluid reservoir mounted on the handlebar to a horizontal position.
– Remove screws ❶.
– Take off cover ❷ with membrane ❸.

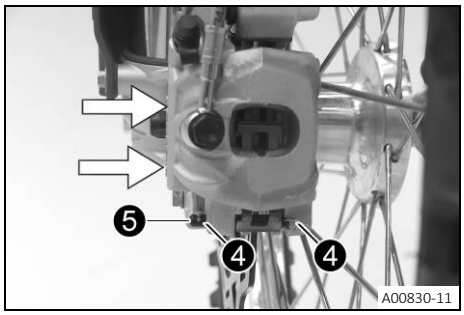

– Manually press the brake caliper toward the brake disc to push back the brake pistons. Ensure that brake fluid does not flow out of the brake fluid reservoir, extract some if necessary.

Info

Make sure that you do not press the brake caliper against the spokes when pushing back the brake pistons.

– Remove cotter pins ❹, pull out pin ❺, and remove the brake linings.
– Clean the brake caliper and the brake caliper bracket.

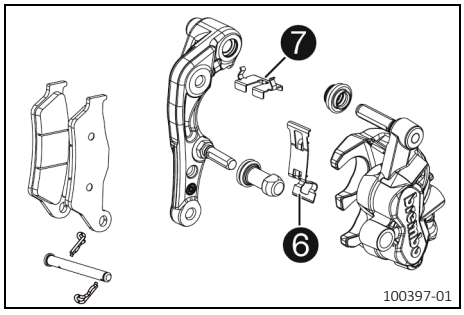

– Check that spring plate ❻ in the brake caliper and sliding plate ❼ in the brake caliper bracket are seated correctly.

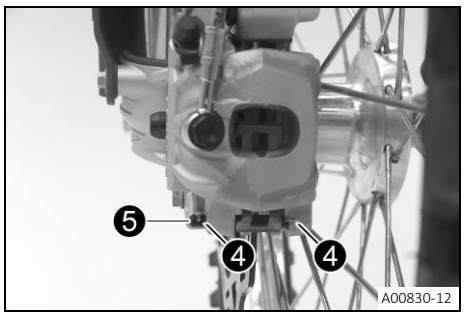

– Insert the new brake linings, insert pin ❺, and mount cotter pins ❹.

Info
Always change the brake linings in pairs.

– Operate the hand brake lever repeatedly until the brake linings are in contact with the brake disc and there is a pressure point.

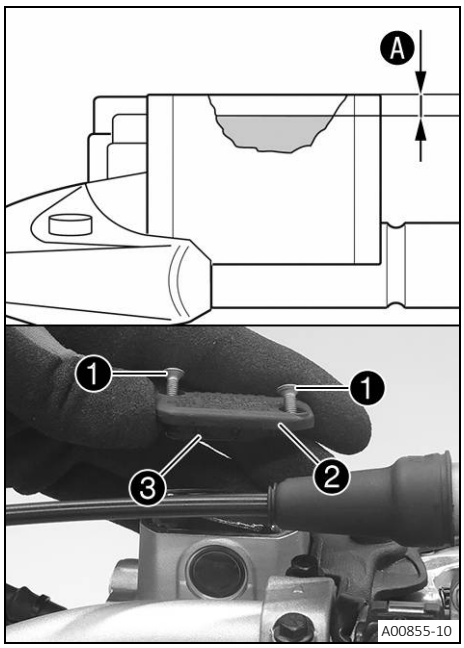

– Add brake fluid up to level Ⓐ.

Guideline

Level Ⓐ (brake fluid level below reservoir rim)	5 mm (0.2 in)

Brake fluid DOT 4 / DOT 5.1 (📖 p. 129)

– Position cover ❷ with membrane ❸.
– Mount and tighten screws ❶.

Info
Use water to immediately clean up any brake fluid that has overflowed or spilled.

12.8 Checking the free travel of foot brake lever

Warning
Danger of accidents The brake system fails in the event of overheating.
If there is no free travel on the foot brake lever, pressure builds up in the brake system on the rear brake.
– Set the free travel on the foot brake lever in accordance with the specification.

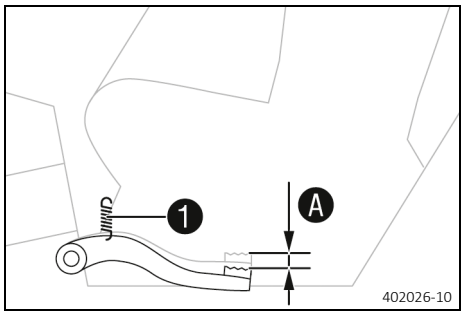

– Disconnect spring ❶.
– Move the foot brake lever back and forth between the end stop and the contact to the foot brake cylinder piston and check free travel Ⓐ.

Guideline

Free travel at foot brake lever	3 … 5 mm (0.12 … 0.2 in)

» If the free travel does not meet specifications:
– Adjust the basic position of the foot brake lever. (📖 p. 82)

– Reconnect spring ❶.

12.9 Adjusting the basic position of the foot brake lever

Warning

Danger of accidents The brake system fails in the event of overheating.

If there is no free travel on the foot brake lever, pressure builds up in the brake system on the rear brake.

– Set the free travel on the foot brake lever in accordance with the specification.

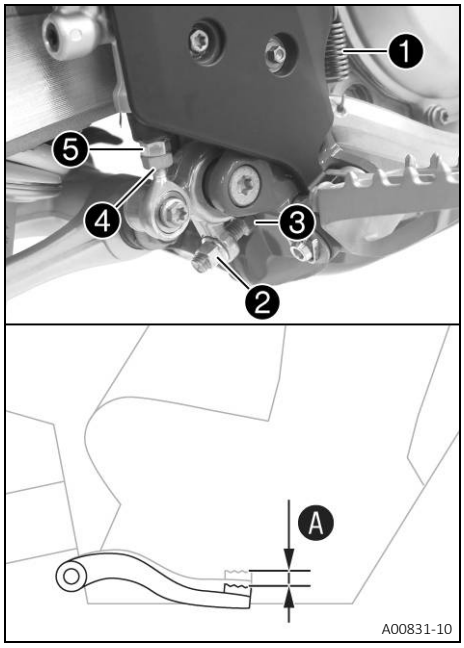

– Detach spring ❶.
– Loosen nut ❹ and, with push rod ❺, turn it back until you have maximum free travel.
– To adjust the basic position of the foot brake lever to individual requirements, loosen nut ❷ and turn screw ❸ accordingly.

Info

The range of adjustment is limited.

– Turn push rod ❺ accordingly until you have free travel Ⓐ. If necessary, adjust the basic position of the foot brake lever.

Guideline

Free travel at foot brake lever	3 … 5 mm (0.12 … 0.2 in)

– Hold push rod ❺ and tighten nut ❹.

Guideline

Remaining nuts, chassis	M6	10 Nm (7.4 lbf ft)

– Hold screw ❸ and tighten nut ❷.

Guideline

Nut, foot brake lever stop	M8	20 Nm (14.8 lbf ft)

– Attach spring ❶.

12.10 Checking the rear brake fluid level

Warning

Danger of accidents An insufficient brake fluid level will cause the brake system to fail.

If the brake fluid level drops below the specified marking or the specified value, the brake system is leaking or the brake linings are worn down.

– Check the brake system and do not continue riding until the problem is eliminated. (Your authorized GASGAS Motorcycles workshop will be glad to help.)

Warning

Danger of accidents Old brake fluid reduces the braking effect.

– Make sure that brake fluid for the front and rear brake is changed in accordance with the service schedule. (Your authorized GASGAS Motorcycles workshop will be glad to help.)

Preparatory work

– Check the brake linings of the rear brake. (📖 p. 84)

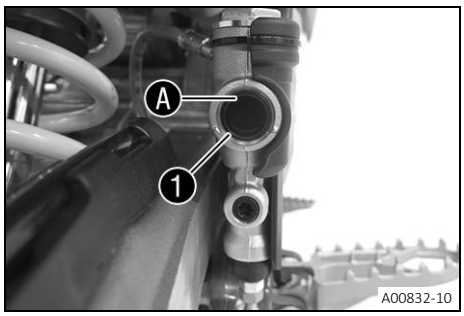

Main work

– Stand the vehicle upright.
– Check the brake fluid level in level viewer 1.
  » If the brake fluid has dropped below marking A:
    – Add rear brake fluid. (p. 83)

12.11 Adding rear brake fluid

Warning

Danger of accidents An insufficient brake fluid level will cause the brake system to fail.

If the brake fluid level drops below the specified marking or the specified value, the brake system is leaking or the brake linings are worn down.

– Check the brake system and do not continue riding until the problem is eliminated. (Your authorized GAS-GAS Motorcycles workshop will be glad to help.)

Warning

Skin irritation Brake fluid causes skin irritation.

– Keep brake fluid out of the reach of children.
– Wear suitable protective clothing and safety glasses.
– Do not allow brake fluid to come into contact with the skin, the eyes or clothing.
– Consult a doctor immediately if brake fluid has been swallowed.
– Rinse the affected area with plenty of water in the event of contact with the skin.
– Rinse eyes thoroughly with water immediately and consult a doctor if brake fluid comes into contact with the eyes.
– If brake fluid spills on to your clothing, change the clothing.

Warning

Danger of accidents Old brake fluid reduces the braking effect.

– Make sure that brake fluid for the front and rear brake is changed in accordance with the service schedule. (Your authorized GASGAS Motorcycles workshop will be glad to help.)

Note

Environmental hazard Hazardous substances cause environmental damage.

– Dispose of oils, grease, filters, fuel, cleaning agents, brake fluid, etc., correctly and in compliance with the applicable regulations.

Info

Never use DOT 5 brake fluid. It is silicone-based and purple in color. Oil seals and brake lines are not designed for DOT 5 brake fluid.
Avoid contact between brake fluid and painted parts. Brake fluid attacks paint.
Only use clean brake fluid from a sealed container.

Preparatory work

– Check the brake linings of the rear brake. (p. 84)

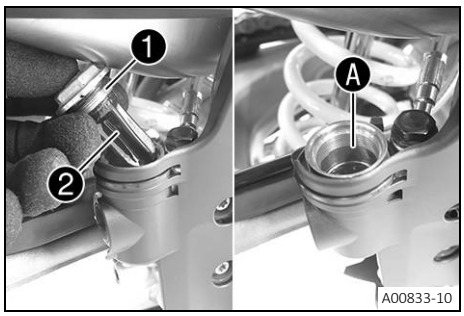

Main work

– Stand the vehicle upright.
– Remove screw cap 1 with membrane 2 and the O-ring.
– Add brake fluid to level A.

Brake fluid DOT 4 / DOT 5.1 (📖 p. 129)

– Mount and tighten the screw cap with the membrane and O-ring.

Info
Clean up overflowed or spilled brake fluid immediately with water.

12.12 Checking the brake linings of the rear brake

Warning
Danger of accidents Worn-out brake linings reduce the braking effect.
– Ensure that worn-out brake linings are replaced immediately. (Your authorized GASGAS Motorcycles workshop will be glad to help.)

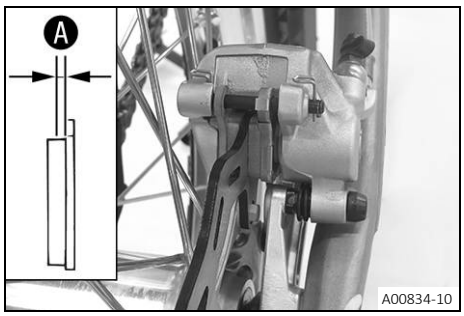

– Check the brake linings for minimum thickness A.

Minimum thickness A	≥ 1 mm (≥ 0.04 in)

» If the minimum thickness is less than specified:
– Change the rear brake linings. 🔧 (📖 p. 84)
– Check the brake linings for damage and cracking.
» If damage or wear is encountered:
– Change the rear brake linings. 🔧 (📖 p. 84)

12.13 Changing the rear brake linings 🔧

Warning
Danger of accidents Incorrect servicing will cause the brake system to fail.
– Ensure that service work and repairs are performed professionally. (Your authorized GASGAS Motorcycles workshop will be glad to help.)

Warning
Skin irritation Brake fluid causes skin irritation.
– Keep brake fluid out of the reach of children.
– Wear suitable protective clothing and safety glasses.
– Do not allow brake fluid to come into contact with the skin, the eyes or clothing.
– Consult a doctor immediately if brake fluid has been swallowed.
– Rinse the affected area with plenty of water in the event of contact with the skin.
– Rinse eyes thoroughly with water immediately and consult a doctor if brake fluid comes into contact with the eyes.
– If brake fluid spills on to your clothing, change the clothing.

Warning

Danger of accidents Old brake fluid reduces the braking effect.

– Make sure that brake fluid for the front and rear brake is changed in accordance with the service schedule. (Your authorized GASGAS Motorcycles workshop will be glad to help.)

Warning

Danger of accidents Oil or grease on the brake discs reduces the braking effect.

– Always keep the brake discs free of oil and grease.
– Clean the brake discs with brake cleaner when necessary.

Note

Environmental hazard Hazardous substances cause environmental damage.

– Dispose of oils, grease, filters, fuel, cleaning agents, brake fluid, etc., correctly and in compliance with the applicable regulations.

Info

Never use DOT 5 brake fluid. It is silicone-based and purple in color. Oil seals and brake lines are not designed for DOT 5 brake fluid.
Avoid contact between brake fluid and painted parts. Brake fluid attacks paint.
Only use clean brake fluid from a sealed container.

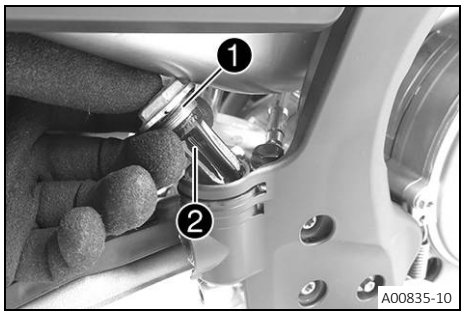

– Position the vehicle upright.
– Remove screw cap ❶ with membrane ❷ and the O-ring.

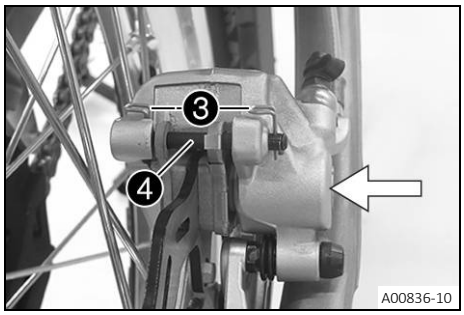

– Manually press the brake caliper toward the brake disc to push back the brake piston. Ensure that brake fluid does not flow out of the brake fluid reservoir; extract some if necessary.

Info

Make sure that you do not press the brake caliper against the spokes when pushing back the brake piston.

– Remove cotter pins ❸, pull out pin ❹, and remove the brake linings.
– Clean the brake caliper and the brake caliper bracket.

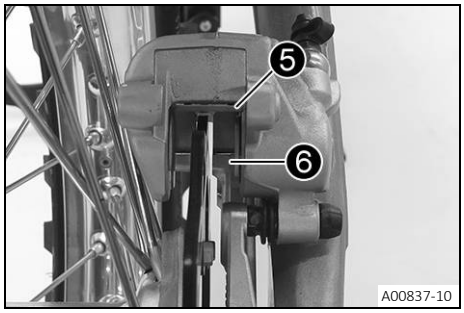

– Check that spring plate ❺ in the brake caliper and sliding plate ❻ in the brake caliper bracket are seated correctly.

Info

The arrow on the spring plate points in the direction of rotation of the brake disc.

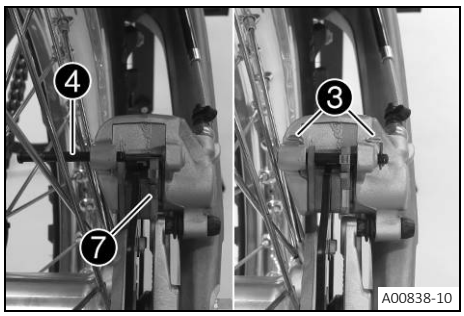

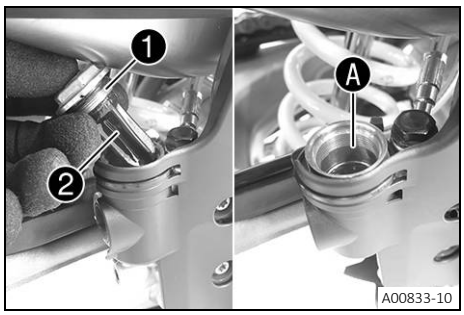

– Insert the new brake linings, insert pin ❹, and mount cotter pins ❸.

Info
Always change the brake linings in pairs.
Make sure that decoupling plate ❼ is mounted on the piston side brake lining.

– Operate the foot brake lever repeatedly until the brake linings are in contact with the brake disc and there is a pressure point.

– Add brake fluid to level Ⓐ.

Brake fluid DOT 4 / DOT 5.1 (p. 129)

– Mount and tighten screw cap ❶ with membrane ❷ and the O-ring.

Info
Use water to immediately clean up any brake fluid that has overflowed or spilled.

13.1 Removing the front wheel

Preparatory work

– Raise the motorcycle with a lift stand. (p. 44)

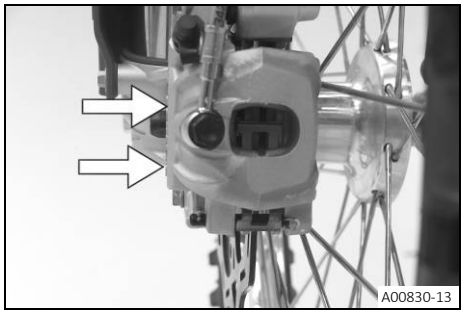

Main work

– Manually press the brake caliper toward the brake disc to push back the brake pistons.

Info
Make sure that you do not press the brake caliper against the spokes when pushing back the brake pistons.

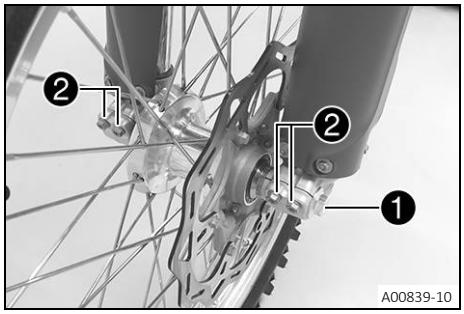

– Loosen screw ❶ by several rotations.
– Loosen screws ❷.
– Press on screw ❶ to push the wheel spindle out of the axle clamp.
– Remove screw ❶.

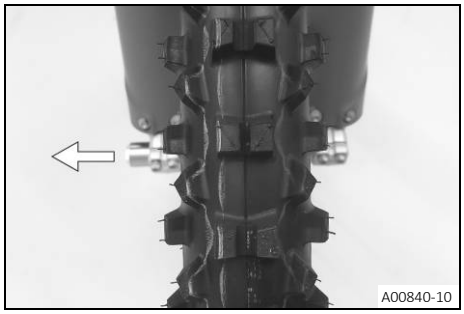

Warning
Danger of accidents Damaged brake discs reduce the braking effect.
– Always lay the wheel down in such a way that the brake disc is not damaged.

– Hold front wheel and remove wheel spindle. Take the front wheel out of the fork.

Info
Do not actuate the hand brake lever when the front wheel is removed.

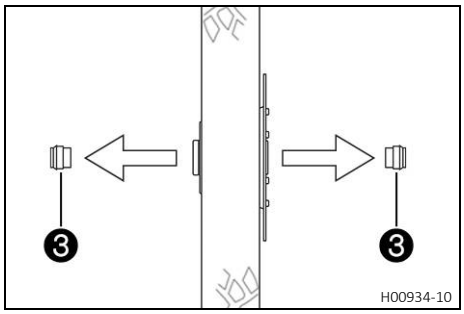

– Remove spacers ❸.

13.2 Installing the front wheel

Warning

Danger of accidents Oil or grease on the brake discs reduces the braking effect.

– Always keep the brake discs free of oil and grease.
– Clean the brake discs with brake cleaner when necessary.

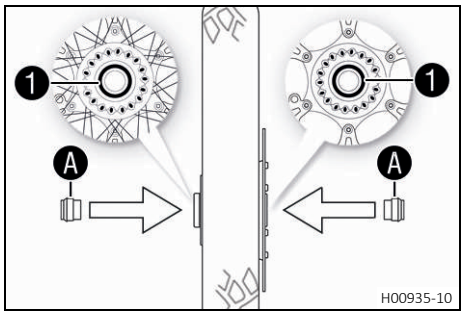

– Check the wheel bearing for damage and wear.
  » If the wheel bearing is damaged or worn:
    – Change front wheel bearing.
– Clean and grease shaft seal rings 1 and contact surfaces A of the spacers.

Long-life grease (📖 p. 131)

– Insert the spacers.
– Clean and grease the wheel spindle.

Long-life grease (📖 p. 131)

– Position the front wheel and insert the wheel spindle.
  ✔ The brake linings are correctly positioned.

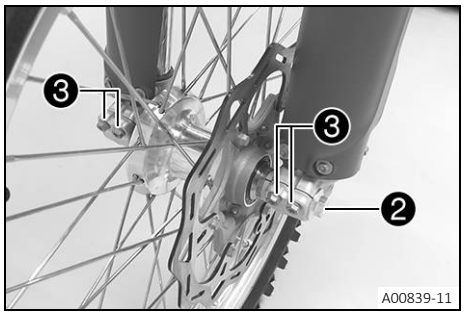

– Mount and tighten screw 2.

  Guideline

Screw, front wheel spindle	M20x1.5	35 Nm (25.8 lbf ft)

– Operate the hand brake lever several times until the brake linings are seated correctly against the brake disc.
– Remove the motorcycle from the lift stand. (📖 p. 44)
– Operate the front brake and compress the fork a few times firmly.
  ✔ The fork legs straighten.
– Tighten screws 3.

  Guideline

Screw, fork stub	M8	15 Nm (11.1 lbf ft)

13.3 Removing the rear wheel

Preparatory work

– Raise the motorcycle with a lift stand. (📖 p. 44)

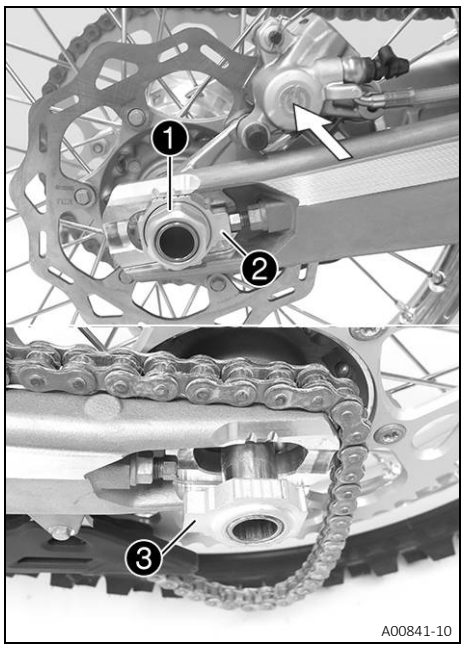

Main work

– Manually press the brake caliper toward the brake disc to push back the brake piston.

Info
Make sure that you do not press the brake caliper against the spokes when pushing back the brake piston.

– Remove nut ❶.
– Take off chain adjuster ❷. Pull out wheel spindle ❸ far enough to allow the rear wheel to be pushed forward.
– Push the rear wheel forward as far as possible. Remove the chain from the rear sprocket.

Info
Cover the components to protect them against damage.

Warning
Danger of accidents Damaged brake discs reduce the braking effect.
– Always lay the wheel down in such a way that the brake disc is not damaged.

– Hold the rear wheel and remove the wheel spindle. Take the rear wheel out of the link fork.

Info
Do not operate the foot brake lever when the rear wheel is removed.

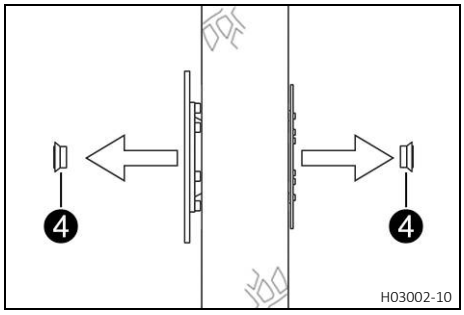

– Remove spacers ❹.

13.4 Installing the rear wheel

Warning
Danger of accidents Oil or grease on the brake discs reduces the braking effect.
– Always keep the brake discs free of oil and grease.
– Clean the brake discs with brake cleaner when necessary.

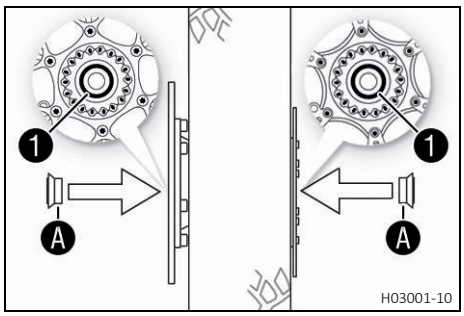

Main work

– Check the wheel bearing for damage and wear.
  » If the wheel bearing is damaged or worn:
    – Change the rear wheel bearing.
– Clean and grease shaft seal rings ❶ and contact surfaces Ⓐ of the spacers.

Long-life grease (📖 p. 131)

– Insert the spacers.

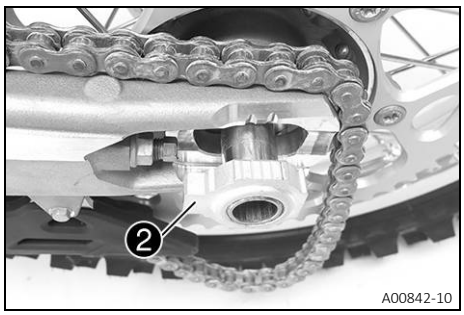

– Clean and grease the wheel spindle.

Long-life grease (📖 p. 131)

– Position rear wheel and insert wheel spindle ❷.
  ✔ The brake linings are correctly positioned.
– Mount the chain.

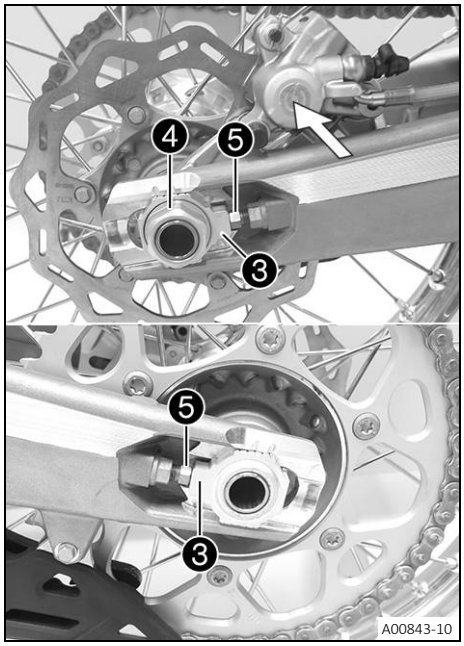

– Position chain adjuster ❸. Mount nut ❹, but do not tighten it yet.
– Make sure that chain adjusters ❸ are fitted correctly on adjusting screws ❺.
– Check the chain tension. (📖 p. 67)
– Tighten nut ❹.

  Guideline

Nut, rear wheel spindle	M25x1.5	80 Nm (59 lbf ft)

Info
The wide adjustment range of the chain adjusters (32 mm (1.26 in)) enables different secondary ratios with the same chain length.
Chain adjusters ❸ can be turned by 180°.

– Operate the foot brake lever repeatedly until the brake linings are in contact with the brake disc and there is a pressure point.

Finishing work

– Remove the motorcycle from the lift stand. (📖 p. 44)

13.5 Checking the tire condition

Info
Only mount tires approved and/or recommended by GASGAS Motorcycles.
Other tires could have a negative effect on handling characteristics.
The type, condition, and pressure of the tires all have a major impact on the handling characteristic of the motorcycle.
The tires mounted on the front and rear wheels must have a similar profile.
Worn tires have a negative effect on handling characteristics, especially on wet surfaces.

Preparatory work
– Raise the motorcycle with a lift stand. (p. 44)

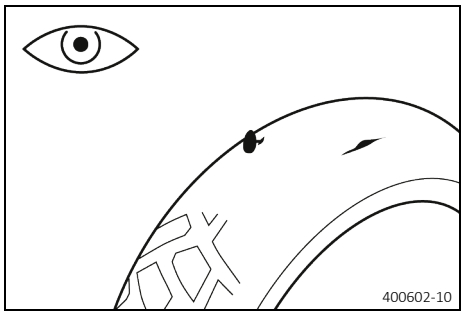

Main work
– Check the front and rear tires for cuts, embedded objects, and other damage.
» If the tires have cuts, run-in objects, or other damage:
– Change the tires.

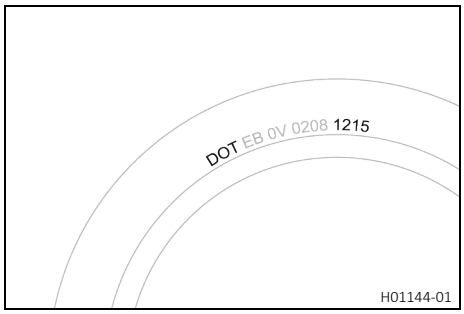

– Check the tire age.

Info
The tire date of manufacture is usually contained in the tire label and is indicated by the last four digits of the **DOT** number. The first two digits indicate the week of manufacture and the last two digits the year of manufacture.
GASGAS Motorcycles recommends that the tires be changed after five years at the latest, regardless of the actual wear.

» If the tires are more than five years old:
– Change the tires.

Finishing work
– Remove the motorcycle from the lift stand. (p. 44)

13.6 Checking tire pressure

Info
Low tire pressure leads to abnormal wear and overheating of the tire.
Correct tire pressure ensures optimal riding comfort and maximum tire service life.

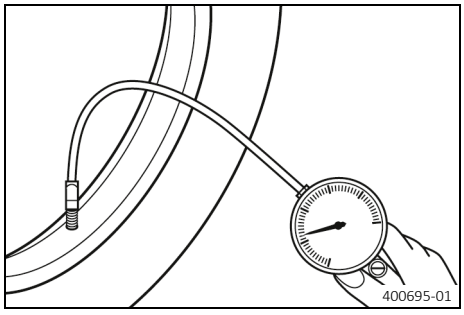

– Remove protection cap.
– Check tire pressure when the tires are cold.

Offroad tire pressure	
front	1.0 bar (15 psi)
rear	1.0 bar (15 psi)

» If the tire pressure does not meet specifications:
– Correct tire pressure.
– Mount the protection cap.

13.7 Checking the spoke tension

Warning

Danger of accidents Incorrectly tensioned spokes impair the handling characteristic and result in secondary damage.

The spokes break due to being overloaded if they are too tightly tensioned. If the tension in the spokes is too low, then lateral and radial run-out will form in the wheel. Other spokes will become looser as a result.

– Check spoke tension regularly, and in particular on a new vehicle. (Your authorized GASGAS Motorcycles workshop will be glad to help.)

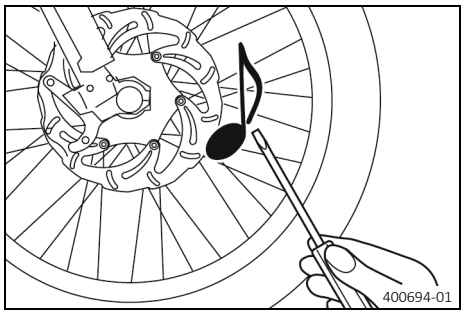

– Strike each spoke briefly using a screwdriver blade.

Info

The frequency of the sound depends on the spoke length and spoke diameter.
If spokes of the same length and diameter vibrate with a different tone, this is an indication that the spoke tensions differ.

You should hear a high note.

» If the spoke tension differs:

– Correct the spoke tension.

– Check the spoke torque.

Guideline

Spoke nipple, front wheel	M4.5	6 Nm (4.4 lbf ft)
Spoke nipple, rear wheel	M4.5	6 Nm (4.4 lbf ft)

Torque wrench kit (58429094000)

14.1 Removing the 12-V battery

Caution

Danger of burns The voltage regulator gets very hot when the vehicle is driven.

– Allow the voltage regulator to cool down before performing any work.

Note

Environmental hazard 12 V batteries contain environmentally hazardous materials.

– Do not dispose of 12 V batteries as household waste.

– Dispose of 12 V batteries at a collection point for used batteries.

Preparatory work

– Remove the seat. (📖 p. 56)

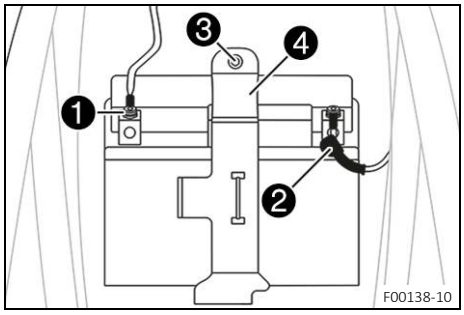

Main work

– Hang the voltage regulator to the side.

– Disconnect negative cable ❶ from the 12-V battery.

– Pull back positive terminal cover ❷ and disconnect the positive cable from the 12-V battery.

– Remove screw ❸.

– Pull holding bracket ❹ forward and remove the 12-V battery upwards.

14.2 Installing the 12-V battery

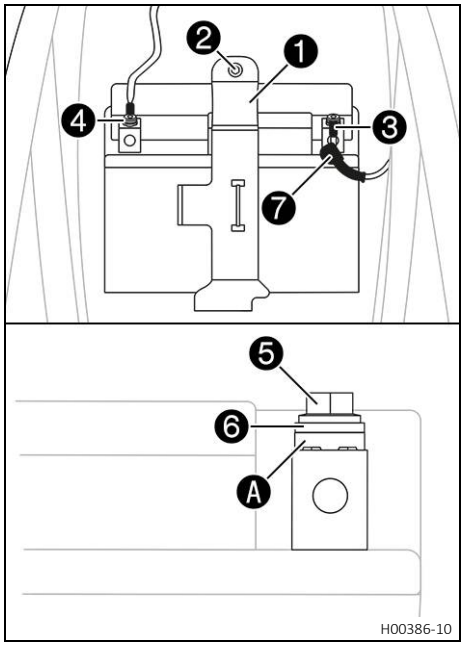

Main work

– Insert the 12 V battery into the battery compartment with the terminals facing forward and secure with holding bracket ❶.

12-V battery (HJTZ5S-FP-C) (📖 p. 123)

– Mount and tighten screw ❷.

Guideline

Remaining screws, chassis	M6	10 Nm (7.4 lbf ft)

– Connect positive cable ❸ to the 12-V battery.

Guideline

Screw, battery terminal	M5	2.5 Nm (1.84 lbf ft)

– Connect negative cable ❹ to the 12-V battery.

Guideline

Screw, battery terminal	M5	2.5 Nm (1.84 lbf ft)

Contact disks Ⓐ must be mounted under screws ❺ and cable sockets ❻ with the claws toward the battery terminal.

– Slide positive terminal cover ❼ over the positive terminal.

– Position the voltage regulator.

Finishing work

– Mount the seat. (📖 p. 57)

14.3 Charging the 12-V battery

Warning

Risk of injury 12 V batteries contain harmful substances.

- Keep 12 V batteries out of the reach of children.
- Keep sparks and open flames away from 12 V batteries.
- Only charge 12 V batteries in well-ventilated rooms.
- Maintain a minimum clearance from inflammable materials when charging 12 V batteries.
  Minimum clearance 1 m (3 ft)
- Do not charge deeply discharged 12 V batteries if the charge is already below the minimum voltage.
  Minimum voltage before the start of the charge 9 V
- Dispose of 12 V batteries with less than the minimum voltage correctly.

Note

Environmental hazard 12 V batteries contain environmentally hazardous materials.

- Do not dispose of 12 V batteries as household waste.
- Dispose of 12 V batteries at a collection point for used batteries.

Info

Even when there is no load on the 12-V battery, it discharges steadily each day.
The charging level and the method of charging are very important for the service life of the 12-V battery.
Rapid recharging with a high charging current shortens the service life of the battery.
If the charging current, charging voltage, or charging time is exceeded, the 12 V battery will be destroyed.
If the 12-V battery is depleted by repeated starting, the 12-V battery must be charged immediately.
If the 12-V battery is left in a discharged state for an extended period, it will become deeply discharged and suffer a loss of capacity, destroying the battery.
The 12-V battery is maintenance-free.

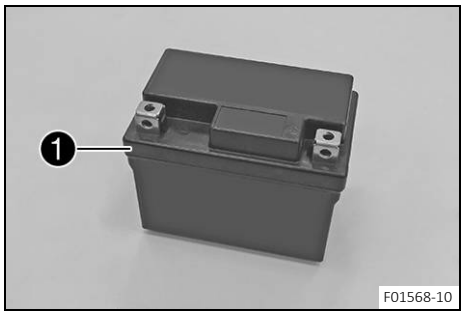

Preparatory work

- Remove the seat. (p. 56)
- Remove the 12-V battery. (p. 93)

Main work

- Check the battery voltage.
  - » Battery voltage: < 9 V
    - Do not charge the 12-V battery.
    - Replace the 12-V battery and dispose of the old 12-V battery properly.
  - » If the specifications have been met:
    Battery voltage: ≥ 9 V
    - Connect a battery charger to the 12-V battery. Switch on the battery charger.

    Guideline

The charging current, charging voltage, and charging time must not be exceeded.	
Maximum charging voltage	14.4 V
Maximum charging current	3.0 A
Maximum charging time	24 h
Recharge the 12-V battery regularly when the motorcycle is not being used	6 months

(EU) battery charger (79629974000)

Alternative 1

(US) battery charger (79629974500)

These battery chargers test whether the 12-V battery retains its voltage. It is also impossible to overcharge the 12-V battery with these battery chargers. The charging time may be longer at low temperatures.

These battery chargers are only suitable for lithium iron phosphate batteries. Read the accompanying **GASGAS Technical Accessories** instructions.

Info

Never remove cover ❶.

– Switch off the battery charger after charging and disconnect from the 12-V battery.

Finishing work

– Install the 12-V battery. (p. 93)
– Mount the seat. (p. 57)

14.4 Changing main fuse

Warning

Fire hazard Incorrect fuses overload the electrical system.

– Only use fuses with the required ampere value.
– Do not bypass or repair fuses.

Caution

Danger of burns The voltage regulator gets very hot when the vehicle is driven.

– Allow the voltage regulator to cool down before performing any work.

Info

The main fuse protects all electrical power consumers of the vehicle. It is located in the starter relay housing under the seat.

Preparatory work

– Remove the seat. (p. 56)

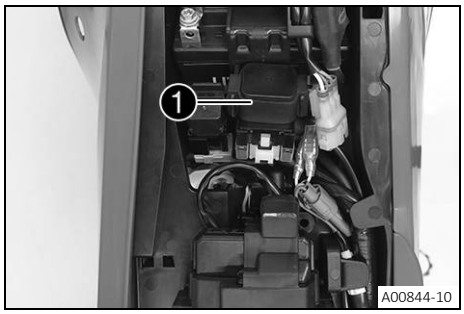

Main work

– Pull starter relay ❶ from the holder.

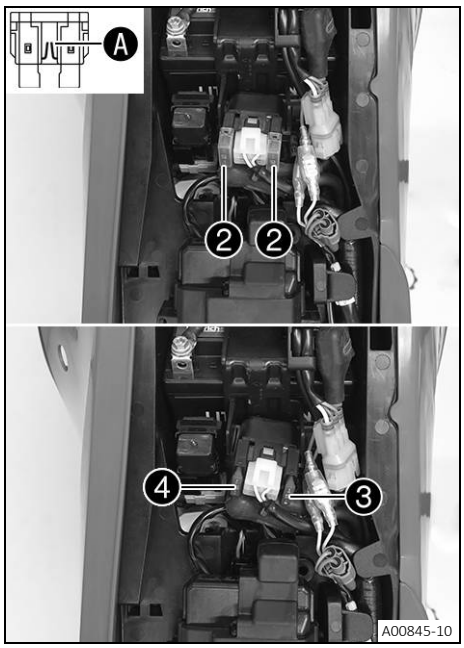

– Take off protection caps ❷.
– Remove faulty main fuse ❸.

Info
A faulty fuse has a burned-out fuse wire Ⓐ.
A spare fuse ❹ is located in the starter relay.

– Insert a new main fuse.

Fuse (58011109110) (📖 p. 123)

– Check that the electrical system is functioning properly.

Tip
Insert a spare fuse so that it is available if needed.

– Mount the protection caps.
– Mount the starter relay onto the holder and route the cable.

Finishing work
– Mount the seat. (📖 p. 57)

14.5 Diagnostics connector

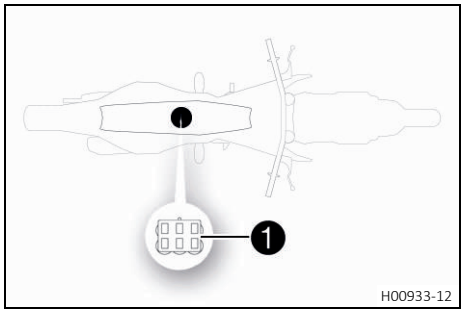

Diagnostics connector ❶ is located under the seat.

15.1 Cooling system

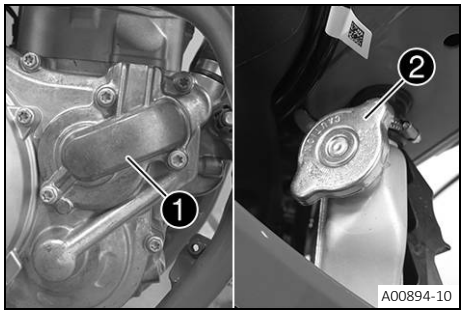

Water pump ❶ in the engine circulates the coolant.
The pressure resulting from the warming of the cooling system is regulated by a valve in radiator cap ❷. This ensures that operating the vehicle at the specified coolant temperature will not result in a risk of malfunctions.

120 °C (248 °F)

Cooling is effected by the air stream.
The lower the speed, the less the cooling effect. Dirty cooling fins also reduce the cooling effect.

15.2 Checking the antifreeze and coolant level

Warning

Danger of scalding During motorcycle operation, the coolant gets very hot and is under pressure.

- Do not open the radiator, the radiator hoses or other cooling system components if the engine or the cooling system are at operating temperature.
- Allow the cooling system and the engine to cool down before you open the radiator, the radiator hoses or other components of the cooling system.
- In the event of scalding, rinse the area affected immediately with lukewarm water.

Warning

Danger of poisoning Coolant is toxic and a health hazard.

- Keep coolant out of the reach of children.
- Do not allow coolant to come into contact with the skin, the eyes and clothing.
- Consult a doctor immediately if coolant is swallowed.
- Rinse the affected area immediately with plenty of water in the event of contact with the skin.
- Rinse eyes thoroughly with water and consult a doctor immediately if coolant gets into the eyes.
- Change clothing if coolant spills onto your clothing.

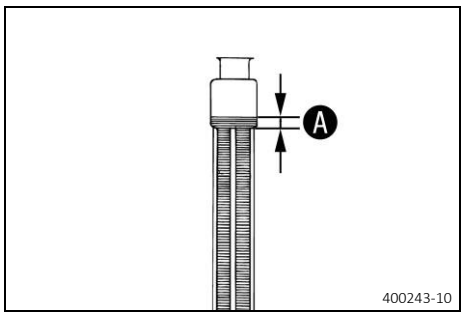

Condition
The engine is cold.

- Stand the motorcycle upright on a horizontal surface.
- Remove the radiator cap.
- Check the antifreeze in the coolant.

−25 … −45 °C (−13 … −49 °F)

  » If the antifreeze in the coolant does not match the specified value:
    - Correct the antifreeze in the coolant.
- Check the coolant level in the radiator.

Coolant level Ⓐ above the radiator fins	10 mm (0.39 in)

  » If the coolant level does not match the specified value:
    - Correct the coolant level.

Coolant (📖 p. 129)

- Mount the radiator cap.

15.3 Checking the coolant level

Warning

Danger of scalding During motorcycle operation, the coolant gets very hot and is under pressure.

– Do not open the radiator, the radiator hoses or other cooling system components if the engine or the cooling system are at operating temperature.
– Allow the cooling system and the engine to cool down before you open the radiator, the radiator hoses or other components of the cooling system.
– In the event of scalding, rinse the area affected immediately with lukewarm water.

Warning

Danger of poisoning Coolant is toxic and a health hazard.

– Keep coolant out of the reach of children.
– Do not allow coolant to come into contact with the skin, the eyes and clothing.
– Consult a doctor immediately if coolant is swallowed.
– Rinse the affected area immediately with plenty of water in the event of contact with the skin.
– Rinse eyes thoroughly with water and consult a doctor immediately if coolant gets into the eyes.
– Change clothing if coolant spills onto your clothing.

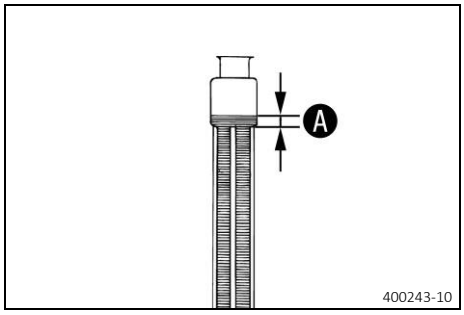

Condition

The engine is cold.

– Stand the motorcycle upright on a horizontal surface.
– Remove the radiator cap.
– Check the coolant level in the radiator.

Coolant level A above the radiator fins	10 mm (0.39 in)

» If the coolant level does not match the specified value:
– Correct the coolant level.

Coolant (📖 p. 129)

– Mount the radiator cap.

15.4 Draining the coolant

Warning

Danger of scalding During motorcycle operation, the coolant gets very hot and is under pressure.

– Do not open the radiator, the radiator hoses or other cooling system components if the engine or the cooling system are at operating temperature.
– Allow the cooling system and the engine to cool down before you open the radiator, the radiator hoses or other components of the cooling system.
– In the event of scalding, rinse the area affected immediately with lukewarm water.

Warning

Danger of poisoning Coolant is toxic and a health hazard.

- Keep coolant out of the reach of children.
- Do not allow coolant to come into contact with the skin, the eyes and clothing.
- Consult a doctor immediately if coolant is swallowed.
- Rinse the affected area immediately with plenty of water in the event of contact with the skin.
- Rinse eyes thoroughly with water and consult a doctor immediately if coolant gets into the eyes.
- Change clothing if coolant spills onto your clothing.

Condition

The engine is cold.

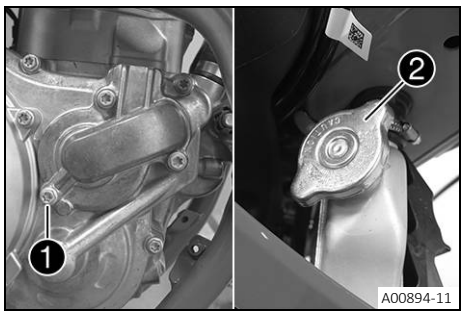

- Position the motorcycle upright.
- Place an appropriate container under the water pump cover.
- Remove screw 1. Take off radiator cap 2.
- Completely drain the coolant.
- Mount and tighten screw 1 with a new seal ring.

  Guideline

Screw, water pump cover	M6	10 Nm (7.4 lbf ft)

15.5 Refilling with coolant

Warning

Danger of poisoning Coolant is toxic and a health hazard.

- Keep coolant out of the reach of children.
- Do not allow coolant to come into contact with the skin, the eyes and clothing.
- Consult a doctor immediately if coolant is swallowed.
- Rinse the affected area immediately with plenty of water in the event of contact with the skin.
- Rinse eyes thoroughly with water and consult a doctor immediately if coolant gets into the eyes.
- Change clothing if coolant spills onto your clothing.

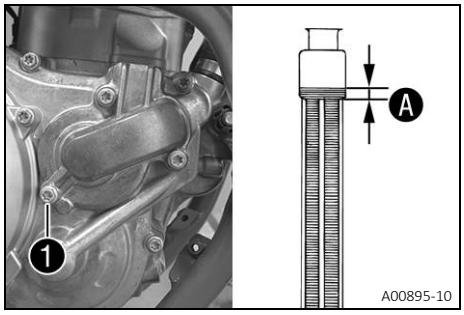

- Make sure that screw 1 is tightened.
- Position the motorcycle upright.
- Pour coolant in up to measurement A above the radiator fins.

  Guideline

Distance A above the radiator fins	10 mm (0.39 in)	
Coolant	0.95 l (1 qt.)	Coolant (p. 129)

- Mount the radiator cap.
- Go for a short test ride.
- Check the coolant level. (p. 98)

15.6 Changing the coolant

Warning

Danger of scalding During motorcycle operation, the coolant gets very hot and is under pressure.

- Do not open the radiator, the radiator hoses or other cooling system components if the engine or the cooling system are at operating temperature.
- Allow the cooling system and the engine to cool down before you open the radiator, the radiator hoses or other components of the cooling system.
- In the event of scalding, rinse the area affected immediately with lukewarm water.

Warning

Danger of poisoning Coolant is toxic and a health hazard.

- Keep coolant out of the reach of children.
- Do not allow coolant to come into contact with the skin, the eyes and clothing.
- Consult a doctor immediately if coolant is swallowed.
- Rinse the affected area immediately with plenty of water in the event of contact with the skin.
- Rinse eyes thoroughly with water and consult a doctor immediately if coolant gets into the eyes.
- Change clothing if coolant spills onto your clothing.

Condition

The engine is cold.

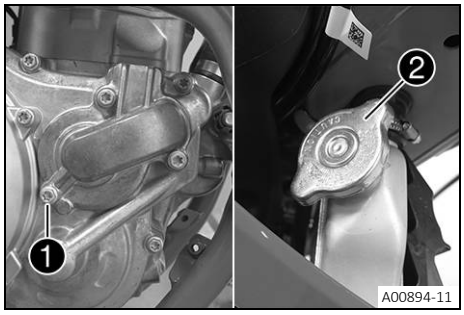

- Position the motorcycle upright.
- Place an appropriate container under the water pump cover.
- Remove screw 1. Take off radiator cap 2.
- Completely drain the coolant.

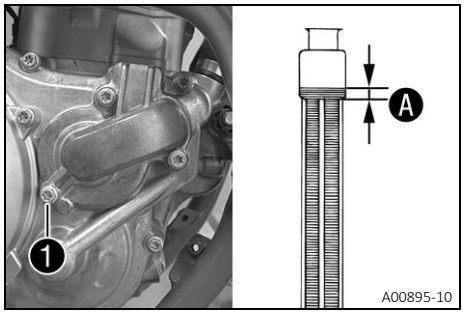

- Mount and tighten screw 1 with a new seal ring.

  Guideline

Screw, water pump cover	M6	10 Nm (7.4 lbf ft)

- Pour coolant in up to level A above the radiator fins.

  Guideline

Distance A above the radiator fins	10 mm (0.39 in)

Coolant	0.95 l (1 qt.)	Coolant (📖 p. 129)

- Mount the radiator cap.
- Go for a short test ride.
- Check the coolant level. (📖 p. 98)

16.1 Checking the play in the throttle cable

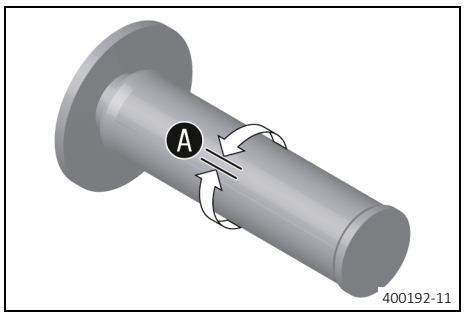

– Check the throttle grip for smooth operation.
– Move the handlebar to the straight-ahead position. Turn the throttle grip back and forth slightly and determine the play in throttle cable Ⓐ.

Play in throttle cable	3 … 5 mm (0.12 … 0.2 in)

» If the throttle cable play does not meet the specified value:
– Adjust the play in the throttle cable. 🔧 (📖 p. 101)

– Push the cold start button in all the way.

When the throttle grip is turned forward, the cold start button returns to its original position.

» If the cold start button does not return to its original position:
– Adjust the play in the throttle cable. 🔧 (📖 p. 101)

Danger

Danger of poisoning Exhaust gases are toxic and inhaling them may result in unconsciousness and death.

– Always make sure there is sufficient ventilation when running the engine.
– Use effective exhaust extraction when starting or running the engine in an enclosed space.

– Start the engine and let it run at idle speed. Move the handlebar to and fro over the entire steering range.

The idle speed must not change.

» If the idle speed changes:
– Adjust the play in the throttle cable. 🔧 (📖 p. 101)

16.2 Adjusting the play in the throttle cable 🔧

Info

If the correct routing of the throttle cables has already been secured, the fuel tank does not need to be removed.

Preparatory work

– Remove the seat. (📖 p. 56)
– Remove the fuel tank. 🔧 (📖 p. 62)
– Check the throttle cable routing. (📖 p. 71)

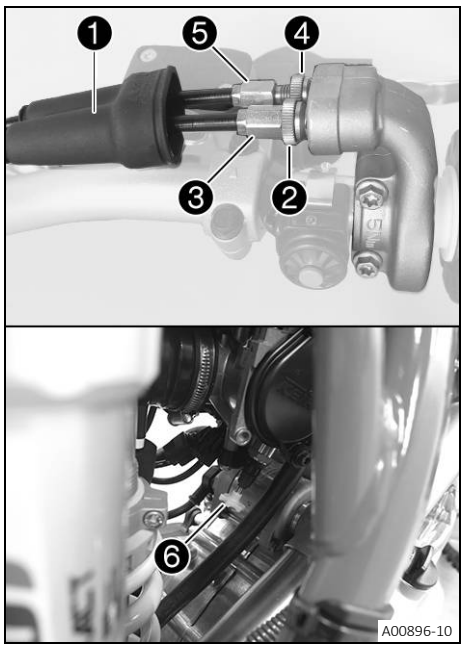

Main work

- Move the handlebar to the straight-ahead position.
- Push back sleeve ❶.
- Loosen nut ❷.
- Turn adjusting screw ❸ in as far as possible.
- Loosen nut ❹.
- Push cold start button ❻ all the way to the stop.
- Turn adjusting screw ❺ so that the cold start button moves to the basic position when the throttle grip is turned to the front.
- Tighten nut ❹.
- Turn adjusting screw ❸ so that there is play in the throttle cable at the throttle grip.

  Guideline

Play in throttle cable	3 … 5 mm (0.12 … 0.2 in)

- Tighten nut ❷.
- Slide on sleeve ❶.
- Check the throttle grip for smooth operation.

Finishing work

- Check the play in the throttle cable. (📖 p. 101)

16.3 Adjusting the characteristic map of the throttle response

Info

On the throttle grip, the characteristic map of the throttle response is changed by changing the guide plate.
A guide plate with a different characteristic map is supplied.

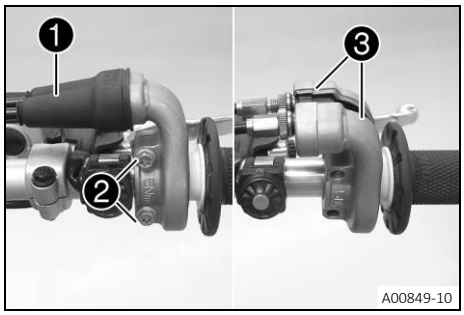

Main work

- Push back sleeve ❶.
- Remove screws ❷ and half-shells ❸.
- Detach the throttle cables and take off the grip tube.

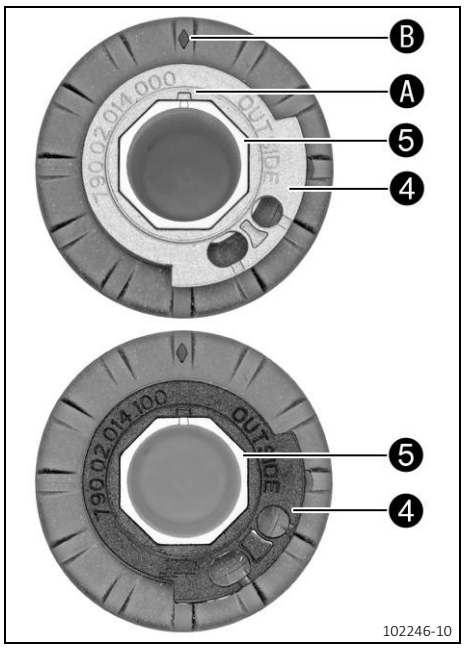

– Remove guide plate ❹ from handle tube ❺.
– Position the required guide plate on the grip tube.

Guideline

The label **OUTSIDE** must be visible. Marking Ⓐ must be positioned at marking Ⓑ.

Black guide plate (79002014100)

Alternative 1

Grey guide plate (79002014000)

Info

The gray guide plate opens the throttle valve more slowly. The black guide plate opens the throttle valve more quickly. The black guide plate is already mounted when the vehicle is delivered.

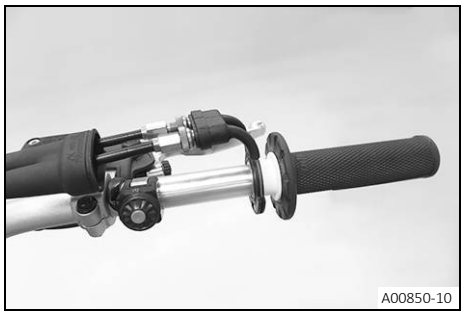

– Clean the outside of the handlebar and the inside of the grip tube. Mount the grip tube on the handlebar.
– Attach the throttle cables to the guide plate and route correctly.
– Position half-shells ❸, mount and tighten screws ❷.

Guideline

Screw, throttle grip	M6	5 Nm (3.7 lbf ft)

– Slide on sleeve ❶ and check the throttle grip for ease of movement.

Finishing work

– Check the play in the throttle cable. (📖 p. 101)

16.4 Adjusting the idle speed

Warning

Danger of accidents The engine may go out spontaneously if the idle speed is set too low.

– Set the idle speed to the specified value. (Your authorized GASGAS Motorcycles workshop will be glad to help.)

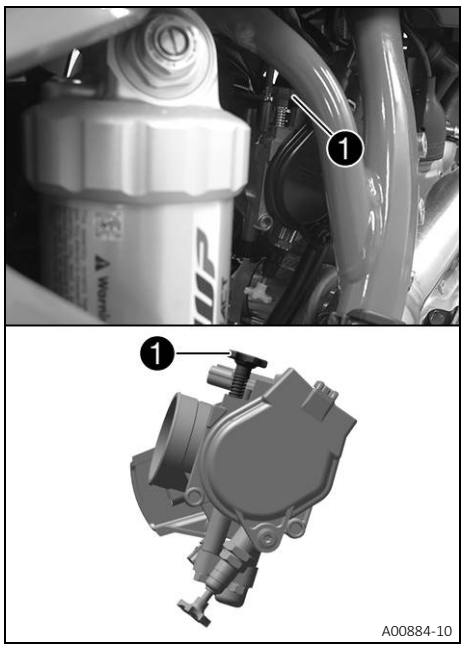

– Run the engine until warm.

✔ The cold start button is deactivated – The cold start button is in its basic position. (📖 p. 17)

Danger

Danger of poisoning Exhaust gases are toxic and inhaling them may result in unconsciousness and death.

– Always make sure there is sufficient ventilation when running the engine.
– Use effective exhaust extraction when starting or running the engine in an enclosed space.

– Set the idle speed by turning idle speed adjusting screw ❶.

Guideline

Idle speed	2,250 … 2,350 rpm

Tachometer (45129075000)

Info

Turning counterclockwise lowers the idle speed.
Turning clockwise raises the idle speed.

16.5 Programming the throttle valve position

Info

If the control unit detects that the throttle valve position at idle speed needs to be reprogrammed, then the malfunction indicator lamp flashes 2x per second.

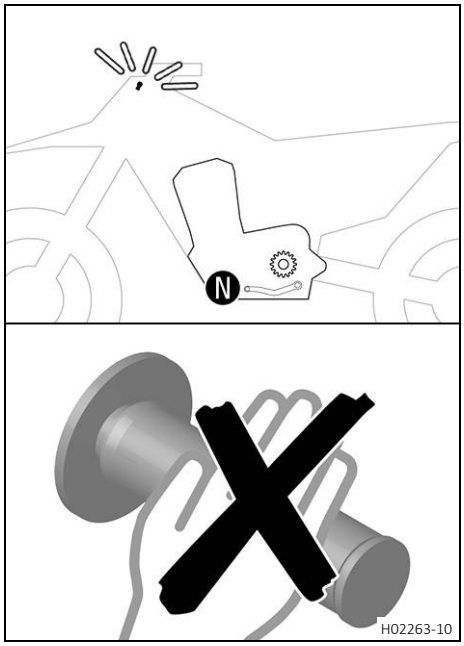

Danger

Danger of poisoning Exhaust gases are toxic and inhaling them may result in unconsciousness and death.

– Always make sure there is sufficient ventilation when running the engine.
– Use effective exhaust extraction when starting or running the engine in an enclosed space.

– Allow the vehicle to run at idle speed.

✔ The malfunction indicator lamp stops flashing once programming is completed.

Info

If the engine becomes too warm, perform a cool-down ride at medium speed.
After this, do not switch off the engine, but leave it running at idle speed until the programming is finished.

16.6 Checking the basic position of the shift lever

Info
When driving, the shift lever must not touch the rider's boot when in the basic position.
When the shift lever keeps touching the boot, the transmission will be subject to an excessive load.

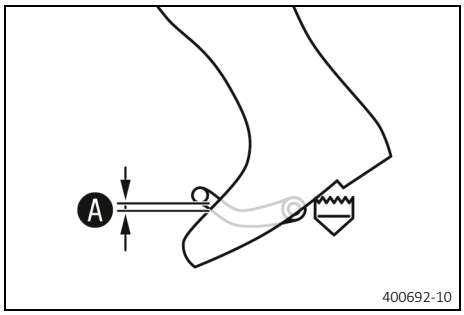

– Sit on the vehicle in the riding position and determine distance Ⓐ between the upper edge of your boot and the shift lever.

Distance between shift lever and upper edge of boot	10 … 20 mm (0.39 … 0.79 in)

» If the distance does not meet specifications:
– Adjust the basic position of the shift lever. (📖 p. 105)

16.7 Adjusting the basic position of the shift lever

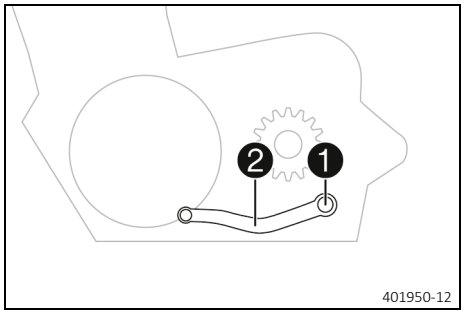

– Remove screw ❶ with the washers and take off shift lever ❷.

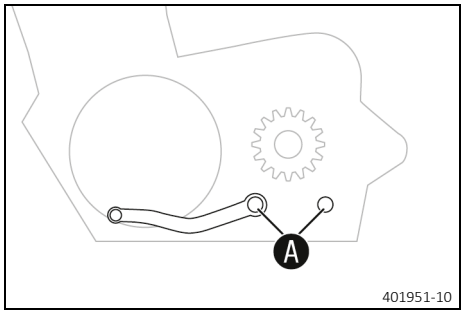

– Clean gear teeth Ⓐ of the shift lever and shift shaft.
– Mount the shift lever on the shift shaft in the required position and engage gearing.

Info
The range of adjustment is limited.
The shift lever must not come into contact with any other vehicle components during the shift procedure.

– Mount and tighten screw ❶ with the washers.

Guideline

Screw, shift lever	M6	14 Nm (10.3 lbf ft) **Loctite®243™**

17.1 Changing the fuel screen

Danger

Fire hazard Fuel is highly flammable.

The fuel in the fuel tank expands when warm and can escape if overfilled.

- Do not fuel the vehicle in the vicinity of open flames or lit cigarettes.
- Switch off the engine for refueling.
- Make sure that no fuel is spilled; particularly not on hot parts of the vehicle.
- If any fuel is spilled, wipe it off immediately.
- Observe the specifications for refueling.

Warning

Danger of poisoning Fuel is poisonous and a health hazard.

- Avoid skin, eye and clothing contact with fuel.
- Immediately consult a doctor if you swallow fuel.
- Do not inhale fuel vapors.
- In case of skin contact, rinse the affected area with plenty of water.
- Rinse the eyes thoroughly with water, and consult a doctor in case of fuel contact with the eyes.
- Change your clothing in case of fuel spills on them.

Note

Environmental hazard Improper handling of fuel is a danger to the environment.

- Do not allow fuel to enter the groundwater, the soil, or the sewage system.

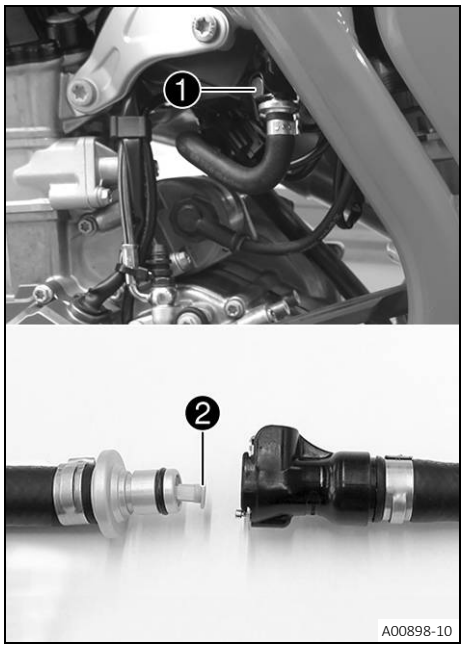

(MC)

- Clean quick release coupling ❶ thoroughly with compressed air.

Info

Under no circumstances should dirt enter into the fuel line. Dirt in the fuel line clogs the injection valve!

- Disconnect the quick release coupling.

Info

Remaining fuel may flow out of the fuel hose.

- Pull fuel screen ❷ out of the connecting piece.
- Insert the new fuel screen all the way into the connecting piece.
- Spray silicone spray onto a lint-free cleaning cloth and lightly lubricate the O-ring of the quick-release coupling.

Silicone spray (p. 131)

- Join quick release coupling ❶.

Danger
Danger of poisoning Exhaust gases are toxic and inhaling them may result in unconsciousness and death.
– Always make sure there is sufficient ventilation when running the engine.
– Use effective exhaust extraction when starting or running the engine in an enclosed space.

– Start the engine and check the response.

(EX)

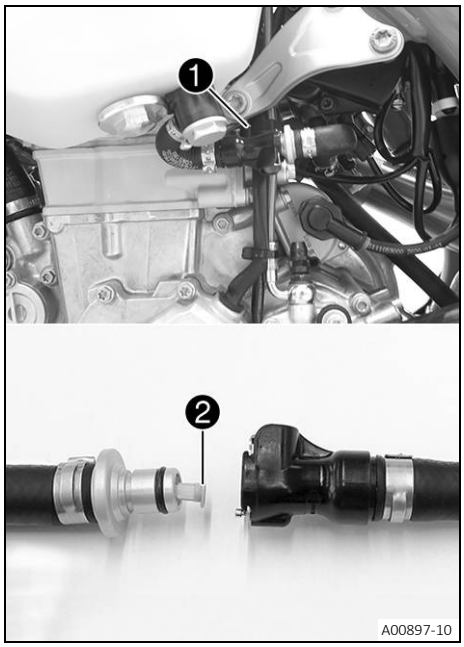

– Clean quick release coupling ❶ thoroughly with compressed air.

Info
Under no circumstances should dirt enter into the fuel line. Dirt in the fuel line clogs the injection valve!

– Disconnect the quick release coupling.

Info
Remaining fuel may flow out of the fuel hose.

– Pull fuel screen ❷ out of the connecting piece.
– Insert the new fuel screen all the way into the connecting piece.
– Spray silicone spray onto a lint-free cleaning cloth and lightly lubricate the O-ring of the quick-release coupling.

Silicone spray (📖 p. 131)

– Join quick release coupling ❶.

Danger
Danger of poisoning Exhaust gases are toxic and inhaling them may result in unconsciousness and death.
– Always make sure there is sufficient ventilation when running the engine.
– Use effective exhaust extraction when starting or running the engine in an enclosed space.

– Start the engine and check the response.

17.2 Checking the engine oil level

Info
The engine oil level can be checked when the engine is cold or warm.

Preparatory work
– Stand the motorcycle upright on a horizontal surface.

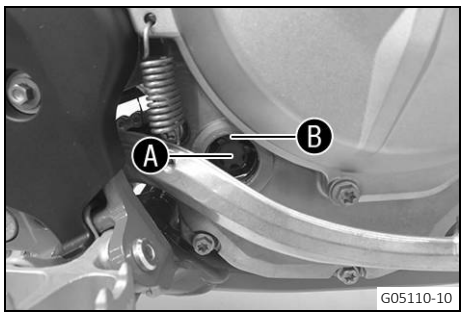

Condition

The engine is cold.

– Check the engine oil level.

The engine oil reaches the middle of level viewer Ⓐ.

» If the engine oil does not reach the middle of the level viewer:

– Add engine oil. (📖 p. 111)

Condition

The engine is at operating temperature.

– Check the engine oil level.

Info

After switching off the engine, wait one minute before checking the level.

The engine oil level is between the middle of the level viewer Ⓐ and the upper edge of the level viewer Ⓑ.

» If the engine oil does not reach the middle of level viewer Ⓐ:

– Add engine oil. (📖 p. 111)

17.3 Changing the engine oil and oil filter, cleaning the oil screens

Warning

Danger of scalding Engine and gear oil get very hot when the motorcycle is ridden.

– Wear suitable protective clothing and safety gloves.

– In the event of scalding, rinse the area affected immediately with lukewarm water.

Note

Environmental hazard Hazardous substances cause environmental damage.

– Dispose of oils, grease, filters, fuel, cleaning agents, brake fluid, etc., correctly and in compliance with the applicable regulations.

Info

Drain the engine oil while the engine is at operating temperature.

Preparatory work

– Park the motorcycle on a level surface.

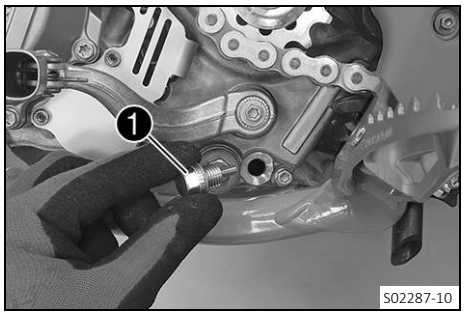

Main work

– Position an appropriate container under the engine.

– Remove oil drain plug Ⓘ with the magnet and seal ring.

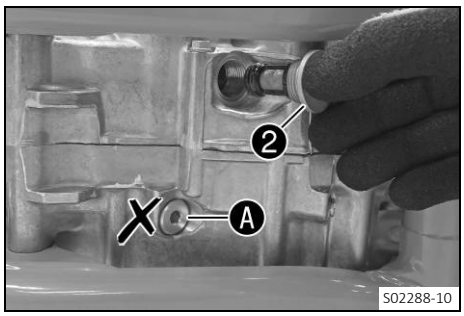

– Remove screw plug ❷ with the short oil screen and the O-rings.

Info
Do not remove screw Ⓐ.

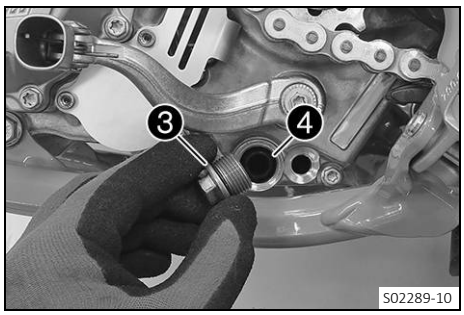

– Remove screw plug ❸ with long oil screen ❹ and the O-rings.
– Allow the engine oil to drain completely.
– Thoroughly clean the parts and the sealing surfaces.

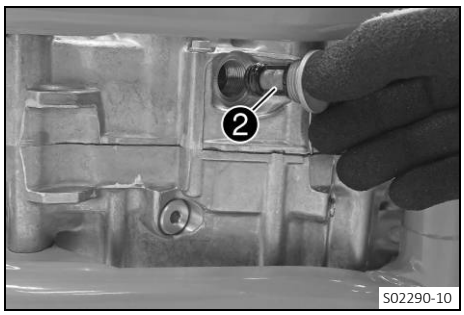

– Mount and tighten screw plug ❷ with the short oil screen and the O-rings.

Guideline

Screw plug, oil screen	M20x1.5	15 Nm (11.1 lbf ft)

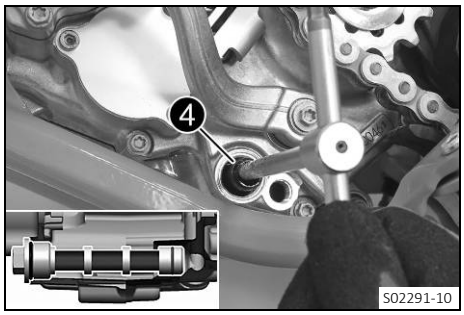

– Position long oil screen ❹ with the O-rings on a pin wrench.
– Position the pin wrench through the drill hole of the screw plug in the opposite section of the engine case.
– Push the oil screen all the way into the engine case.

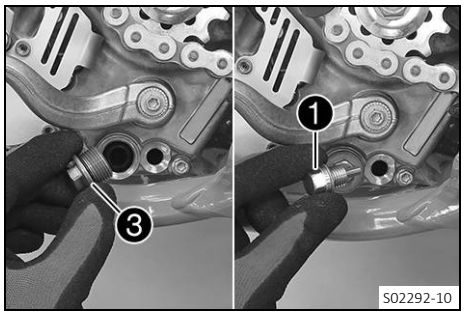

– Mount and tighten screw plug ❸ with the O-ring.

Guideline

Screw plug, oil screen	M20x1.5	15 Nm (11.1 lbf ft)

– Mount and tighten oil drain plug ❶ with the magnet and a new seal ring.

Guideline

Oil drain plug with magnet	M12x1.5	20 Nm (14.8 lbf ft)

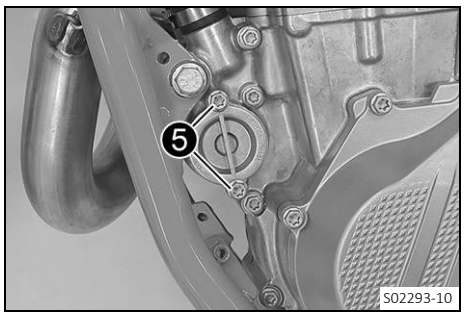

– Remove screws ❺. Remove the oil filter cover with the O-ring.

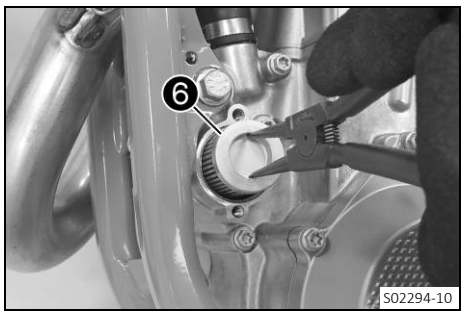

– Pull oil filter ❻ out of the oil filter housing.

Lock ring plier (51012011000)

– Allow the engine oil to drain completely.
– Thoroughly clean the parts and the sealing surfaces.

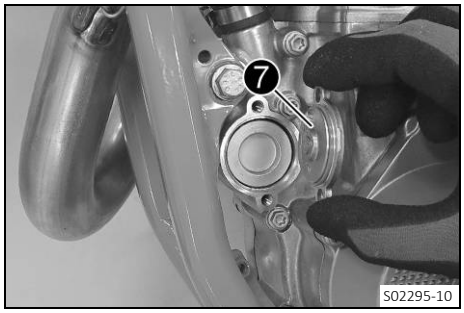

– Lay the motorcycle on its side and fill the oil filter housing to about ⅓ full with engine oil.
– Place the oil filter into the oil filter housing.
– Lubricate the O-ring of the oil filter cover and mount it with oil filter cover ❼.
– Mount and tighten the screws.

Guideline

Screw, oil filter cover	M6	10 Nm (7.4 lbf ft)

– Stand the motorcycle upright.

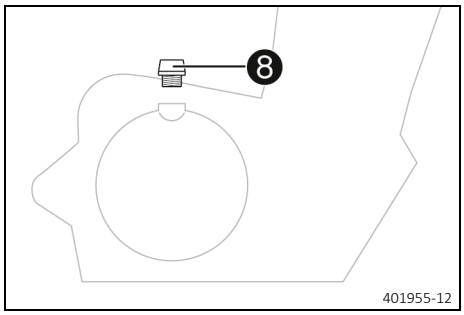

– Remove filler plug ❽ with the O-ring, and fill up with engine oil.

Engine oil	1.0 l (1.1 qt.)	Engine oil (SAE 10W/50) (📖 p. 129)

Info
Too little engine oil or poor-quality engine oil will result in premature wear of the engine.

– Mount and tighten the filler plug together with the O-ring.

Danger
Danger of poisoning Exhaust gases are toxic and inhaling them may result in unconsciousness and death.
– Always make sure there is sufficient ventilation when running the engine.
– Use effective exhaust extraction when starting or running the engine in an enclosed space.

– Start the engine and check for leaks.

Finishing work
– Check the engine oil level. (📖 p. 107)

17.4 Adding engine oil

Info
Too little engine oil or poor-quality engine oil will result in premature wear of the engine.

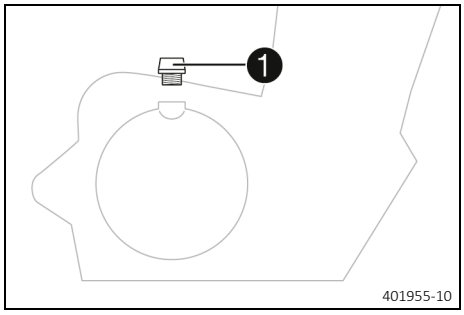

– Remove filler plug 1 with the O-ring.
– Add the same engine oil used when the last oil change was carried out.

Engine oil (SAE 10W/50) (📖 p. 129)

Info
In order to achieve optimal engine oil performance, it is not advisable to mix different engine oils.
GASGAS Motorcycles recommends changing the engine oil, if necessary.

– Mount and tighten the filler plug together with the O-ring.

Danger
Danger of poisoning Exhaust gases are toxic and inhaling them may result in unconsciousness and death.
– Always make sure there is sufficient ventilation when running the engine.
– Use effective exhaust extraction when starting or running the engine in an enclosed space.

– Start the engine and check for leaks.

18.1 Cleaning the motorcycle

Note

Material damage Components become damaged or destroyed if a pressure cleaner is used incorrectly.

The high pressure forces water into the electrical components, connectors, throttle cables, and bearings, etc. Pressure which is too high causes malfunctions and destroys components.

– Do not direct the water jet directly on to electrical components, connectors, throttle cables or bearings.
– Maintain a minimum distance between the nozzle of the pressure cleaner and the component.

Minimum clearance	60 cm (23.6 in)

Note

Environmental hazard Hazardous substances cause environmental damage.

– Dispose of oils, grease, filters, fuel, cleaning agents, brake fluid, etc., correctly and in compliance with the applicable regulations.

Info

To maintain the value and appearance of the motorcycle over a long period, clean it regularly.
Avoid direct sunshine when cleaning the motorcycle.

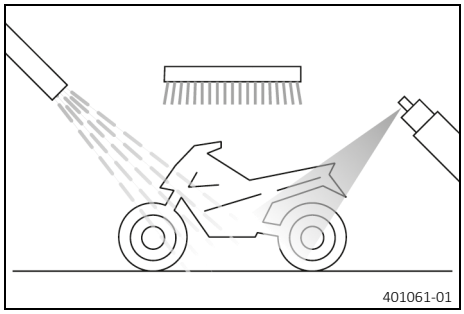

– Close off exhaust system to keep water from entering.
– Remove loose dirt first with a soft jet of water.
– Spray the heavily soiled parts with a normal commercial motorcycle cleaner and clean using a brush.

Motorcycle cleaner (📖 p. 131)

Info

Use warm water containing normal motorcycle cleaner and a soft sponge.
Never apply motorcycle cleaner to a dry vehicle; always rinse the vehicle with water first.

– After rinsing the motorcycle with a gentle spray of water, allow it to dry thoroughly.
– Remove the closure of the exhaust system.

Warning

Danger of accidents Moisture and dirt impair the brake system.

– Brake carefully several times to dry out and remove dirt from the brake linings and the brake discs.

– After cleaning, ride the vehicle a short distance until the engine warms up.

Info

The heat produced causes water at inaccessible locations in the engine and on the brake system to evaporate.

– Push back the protection caps of the handlebar controls to allow any water that has penetrated to evaporate.
– After the motorcycle has cooled down, lubricate all moving parts and pivot points.
– Clean the chain. (📖 p. 66)

– Treat bare metal (except for brake discs and the exhaust system) with a corrosion inhibitor.

Preserving materials for paints, metal and rubber (📖 p. 131)

– Treat all plastic parts and powder-coated parts with a mild cleaning and care product.

Special cleaner for glossy and matte paint finishes, metal and plastic surfaces (📖 p. 132)

19.1 Storage

Warning

Danger of poisoning Fuel is poisonous and a health hazard.

- Avoid skin, eye and clothing contact with fuel.
- Immediately consult a doctor if you swallow fuel.
- Do not inhale fuel vapors.
- In case of skin contact, rinse the affected area with plenty of water.
- Rinse the eyes thoroughly with water, and consult a doctor in case of fuel contact with the eyes.
- Change your clothing in case of fuel spills on them.
- Keep fuels correctly in a suitable canister, and out of the reach of children.

Info

If you plan to garage the motorcycle for a longer period, perform the following steps or have them performed. Before storing the motorcycle, check all parts for function and wear. If service, repairs, or replacements are necessary, you should do this during the storage period (less workshop overload). In this way, you can avoid long workshop waiting times at the start of the new season.

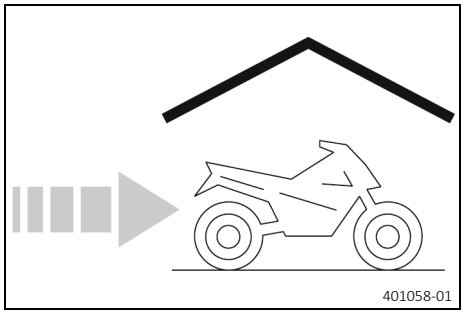
401058-01

- When refueling for the last time before taking the motorcycle out of service, add fuel additive.

Fuel additive (📖 p. 131)

- Refuel. (📖 p. 29)
- Clean the motorcycle. (📖 p. 112)
- Change the engine oil and the oil filter, clean the oil screens. 🔧 (📖 p. 108)
- Check the antifreeze and coolant level. (📖 p. 97)
- Check tire pressure. (📖 p. 91)
- Remove the 12-V battery. 🔧 (📖 p. 93)
- Charge the 12-V battery. 🔧 (📖 p. 94)

  Guideline

Ideal charging and storage temperature of the lithium-ion battery	10 … 20 °C (50 … 68 °F)

- Store the vehicle in a dry location that is not subject to large fluctuations in temperature.

Info

GASGAS Motorcycles recommends jacking up the motorcycle.

- Raise the motorcycle with a lift stand. (📖 p. 44)
- Cover the vehicle with a tarp or a similar cover that is permeable to air.

Info

Do not use non-porous materials since they prevent humidity from escaping, thus causing corrosion.
Avoid running the engine for a short time only. Since the engine cannot warm up properly, the water vapor produced during combustion condenses and causes valves and the exhaust system to rust.

19.2 Putting into operation after storage

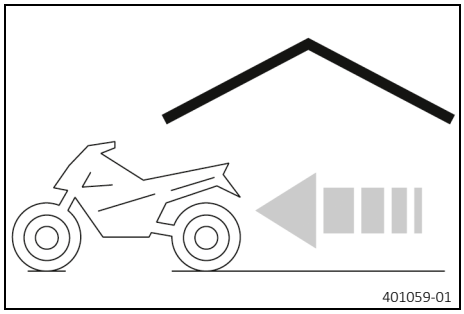

- Install the 12-V battery. (p. 93)
- Remove the motorcycle from the lift stand. (p. 44)
- Perform checks and maintenance measures when preparing for use. (p. 25)
- Take a test ride.

Faults	Possible cause	Action
The engine does not turn when the start button is pressed	Operating error	– Carry out start procedure. (📖 p. 25)
	12-V battery discharged	– Charge the 12-V battery. 🔧 (📖 p. 94) – Check the charging voltage. 🔧 – Check the open-circuit current. 🔧 – Check the stator winding of the alternator. 🔧
	Main fuse blown	– Change the main fuse. (📖 p. 95)
	Faulty starter relay	– Check the starter relay. 🔧
	Faulty starter motor	– Check the starter motor. 🔧
Engine turns but does not start	Quick release coupling not joined	– Join quick release coupling.
	Fuel screen in the quick release coupling is clogged	– Change the fuel screen. 🔧 (📖 p. 106)
	Idle speed is not set correctly	– Adjust the idle speed. 🔧 (📖 p. 103)
	Spark plug sooty or wet	– Clean and dry the spark plug and spark plug connector, or change if necessary.
	Plug gap of spark plug too wide	– Adjust plug gap. Guideline Spark plug electrode gap 0.8 mm (0.031 in)
	Short-circuit cable in wiring harness frayed, stop button faulty	– Check the wiring harness. (visual check) – Check the electrical system.
	Malfunction in the electronic fuel injection	– Read out the fault memory using the GAS-GAS Motorcycles diagnostics tool. 🔧
Engine does not speed up	Malfunction in the electronic fuel injection	– Read out the fault memory using the GAS-GAS Motorcycles diagnostics tool. 🔧
Engine has too little power	Air filter is very dirty	– Clean the air filter and air filter box. 🔧 (📖 p. 59)
	Fuel filter is very dirty	– Change the fuel filter. 🔧
	Malfunction in the electronic fuel injection	– Read out the fault memory using the GAS-GAS Motorcycles diagnostics tool. 🔧
	Exhaust system leaks, deformed or too little glass fiber yarn filling in main silencer	– Check exhaust system for damage. – Change the glass fiber yarn filling of the main silencer. 🔧 (📖 p. 61)
	Valve clearance too little	– Adjust the valve clearance. 🔧
Engine dies during the trip	Lack of fuel	– Refuel. (📖 p. 29)
Engine overheats	Too little coolant in cooling system	– Check the cooling system for leakage. – Check the coolant level. (📖 p. 98)
	Too little air stream	– Switch off the engine when standing.
	Radiator fins very dirty	– Clean the radiator fins.
	Foam formation in cooling system	– Drain the coolant. 🔧 (📖 p. 98) – Refill with coolant. 🔧 (📖 p. 99)
	Bent radiator hose	– Change the radiator hose. 🔧
Malfunction indicator lamp lights up or flashes	Malfunction in the electronic fuel injection	– Check the wiring for damage and the electrical plug-in connections for corrosion and damage. – Read out the fault memory using the GAS-GAS Motorcycles diagnostics tool. 🔧

Faults	Possible cause	Action
High oil consumption	Engine vent hose bent	– Route the vent hose without bends or change it if necessary.
	Engine oil level too high	– Check the engine oil level. (📖 p. 107)
	Engine oil too thin (low viscosity)	– Change the engine oil and the oil filter, clean the oil screens. 🔧 (📖 p. 108)
	Piston or cylinder worn	– Measure the piston/cylinder mounting clearance.
12-V battery discharged	12 V battery is not charging	– Check the charging voltage. 🔧 – Check the stator winding of the alternator. 🔧
	Unwanted electrical power consumer	– Check the open-circuit current. 🔧

Blink code for malfunction indicator lamp	 02a Malfunction indicator lamp flashes 2x per second
Error level condition	Throttle valve position programming necessary

Blink code for malfunction indicator lamp	 02 Malfunction indicator lamp flashes 2x short
Error level condition	Crankshaft speed sensor – circuit fault

Blink code for malfunction indicator lamp	 06 Malfunction indicator lamp flashes 6x short
Error level condition	Throttle valve position sensor circuit A – circuit fault
	Throttle valve position sensor circuit A – input signal too high

Blink code for malfunction indicator lamp	 09 Malfunction indicator lamp flashes 9x short
Error level condition	Induction manifold pressure sensor – circuit fault
	Induction manifold pressure sensor – input signal too low

Blink code for malfunction indicator lamp	 12 Malfunction indicator lamp flashes 1x long, 2x short
Error level condition	Coolant temperature sensor – circuit fault
	Coolant temperature sensor – input signal too low

Blink code for malfunction indicator lamp	 13 Malfunction indicator lamp flashes 1x long, 3x short
Error level condition	Intake air temperature sensor – circuit fault
	Intake air temperature sensor – input signal too low

Blink code for malfunction indicator lamp	 15 Malfunction indicator lamp flashes 1x long, 5x short
Error level condition	Tilt sensor – input signal too low
	Tilt sensor – input signal too high

Blink code for malfunction indicator lamp	 21 Malfunction indicator lamp flashes 2x long, 1x short
Error level condition	Battery voltage – input voltage too high

Blink code for malfunction indicator lamp	 22 Malfunction indicator lamp flashes 2x long, 2x short
Error level condition	Gear position sensor – circuit fault
	Gear position sensor – input signal too high
	Gear position sensor – malfunction

Blink code for malfunction indicator lamp	 33 Malfunction indicator lamp flashes 3x long, 3x short
Error level condition	Injection valve cylinder 1 – circuit fault

Blink code for malfunction indicator lamp	 37 Malfunction indicator lamp flashes 3x long, 7x short
Error level condition	Ignition coil – circuit fault

Blink code for malfunction indicator lamp	 41 Malfunction indicator lamp flashes 4x long, 1x short
Error level condition	Fuel pump controller – short circuit to ground/open circuit
	Fuel pump controller – open circuit/short circuit to plus

Blink code for malfunction indicator lamp	 65 Malfunction indicator lamp flashes 6x long, 5x short
Error level condition	EEPROM – malfunction

Blink code for malfunction indicator lamp	 Malfunction indicator lamp flashes continuously
Error level condition	THREF – malfunction

22 TECHNICAL DATA

22.1 Engine

Design	1-cylinder 4-stroke engine, water-cooled
Displacement	449.9 cm³ (27.455 cu in)
Stroke	63.4 mm (2.496 in)
Bore	95 mm (3.74 in)
Compression ratio	12.75:1
Idle speed	2,250 … 2,350 rpm
Control	OHC, 4 valves controlled via rocker arm
Valve diameter, intake	40 mm (1.57 in)
Valve diameter, exhaust	33 mm (1.3 in)
Valve clearance	
Intake at: 20 °C (68 °F)	0.10 … 0.15 mm (0.0039 … 0.0059 in)
Exhaust at: 20 °C (68 °F)	0.12 … 0.17 mm (0.0047 … 0.0067 in)
Crankshaft bearing	2 cylinder roller bearing
Conrod bearing	Slide bearing
Piston pin bearing (MC)	No bearing bush – DLC coated piston pin
Pistons	Forged light alloy
Piston rings	1 compression ring, 1 oil scraper ring
Engine lubrication	Pressure circulation lubrication with 2 trochoidal pumps
Primary transmission	31:76
Clutch	Multidisc clutch in oil bath, hydraulically activated
Gearbox	
Transmission ratio	
Alternator	12 V, 70 W
Ignition	Contactless controlled fully electronic ignition with digital ignition adjustment
Spark plug	NGK LMAR9AI-8
Spark plug electrode gap	0.8 mm (0.031 in)
Cooling	Water cooling, permanent circulation of coolant by water pump
Starting aid	Starter motor

22.2 Engine tightening torques

Screw, oil jet for piston cooling	M4	2 Nm (1.5 lbf ft) **Loctite®243™**
Crankshaft speed sensor screw and cable retainer	M5	6 Nm (4.4 lbf ft) **Loctite®243™**
Oil nozzle for clutch lubrication	M5	2 Nm (1.5 lbf ft) **Loctite®243™**
Oil nozzle for timing chain lubrication	M5	2 Nm (1.5 lbf ft) **Loctite®243™**
Oil nozzle, piston cooling	M5	2 Nm (1.5 lbf ft) **Loctite®243™**
Oil nozzle, rocker arm lubrication	M5	2 Nm (1.5 lbf ft) **Loctite®243™**
Screw, bearing retainer	M5	6 Nm (4.4 lbf ft) **Loctite®243™**

Screw, clutch spring retainer	M5	6 Nm (4.4 lbf ft)
Screw, gear position sensor	M5	5 Nm (3.7 lbf ft) **Loctite®243™**
Screw, locking lever	M5	6 Nm (4.4 lbf ft) **Loctite®243™**
Screw, stator	M5	6 Nm (4.4 lbf ft) **Loctite®243™**
Screw, suction pump cover	M5	6 Nm (4.4 lbf ft) **Loctite®243™**
Nut, water pump impeller	M6	6 Nm (4.4 lbf ft) **Loctite®243™**
Screw, alternator cover	M6	10 Nm (7.4 lbf ft)
Screw, clutch cover	M6	10 Nm (7.4 lbf ft)
Screw, clutch slave cylinder	M6	10 Nm (7.4 lbf ft)
Screw, cylinder head	M6	10 Nm (7.4 lbf ft)
Screw, engine case	M6	10 Nm (7.4 lbf ft)
Screw, exhaust flange	M6	10 Nm (7.4 lbf ft) **Loctite®243™**
Screw, oil filter cover	M6	10 Nm (7.4 lbf ft)
Screw, pressure pump cover	M6	10 Nm (7.4 lbf ft) **Loctite®243™**
Screw, shift drum locating	M6	10 Nm (7.4 lbf ft) **Loctite®243™**
Screw, shift lever	M6	14 Nm (10.3 lbf ft) **Loctite®243™**
Screw, starter motor	M6	10 Nm (7.4 lbf ft)
Screw, tensioning rail	M6	10 Nm (7.4 lbf ft) **Loctite®243™**
Screw, timing chain failure protection	M6	10 Nm (7.4 lbf ft) **Loctite®243™**
Screw, timing chain tensioner	M6	10 Nm (7.4 lbf ft)
Screw, torque governor	M6	10 Nm (7.4 lbf ft) **Loctite®243™**
Screw, valve cover	M6	10 Nm (7.4 lbf ft)
Screw, water pump cover	M6	10 Nm (7.4 lbf ft)
Oil nozzle for conrod bearing lubrication	M6x0.75	2 Nm (1.5 lbf ft)
Plug, oil channel	M7	9 Nm (6.6 lbf ft) **Loctite®243™**
Screw, rocker arm bearing	M7x1	15 Nm (11.1 lbf ft)
Crankshaft clamp screw plug	M8	10 Nm (7.4 lbf ft)
Plug, timing chain tensioner	M8	8 Nm (5.9 lbf ft)
Plug, oil channel	M10	15 Nm (11.1 lbf ft) **Loctite®243™**
Screw, engine sprocket	M10	60 Nm (44.3 lbf ft) **Loctite®2701™**
Spark plug	M10x1	10 … 12 Nm (7.4 … 8.9 lbf ft)
Engine coolant temperature sensor	M10x1.25	12 Nm (8.9 lbf ft)

Screw, cylinder head	M10x1.25	1st stage 10 Nm (7.4 lbf ft) 2nd stage 30 Nm (22.1 lbf ft) 3rd stage 50 Nm (36.9 lbf ft) Collar and thread oiled
Nut, rotor	M12x1	60 Nm (44.3 lbf ft) Thread, oiled with engine oil/cone degreased
Oil drain plug with magnet	M12x1.5	20 Nm (14.8 lbf ft)
Screw plug, oil pressure control valve	M12x1.5	20 Nm (14.8 lbf ft)
Nut, inner clutch hub	M18x1.5	80 Nm (59 lbf ft)
Nut, primary gear wheel	M20LHx1.5	100 Nm (73.8 lbf ft) **Loctite®243™**
Screw plug, oil screen	M20x1.5	15 Nm (11.1 lbf ft)

22.3 Capacities

22.3.1 Engine oil

Engine oil	1.0 l (1.1 qt.)	Engine oil (SAE 10W/50) (📖 p. 129)

22.3.2 Coolant

Coolant	0.95 l (1 qt.)	Coolant (📖 p. 129)

22.3.3 Fuel

Total fuel tank capacity, approx. (MC)	
Super unleaded (ROZ 95) (📖 p. 130)	7 l (1.8 US gal)
Total fuel tank capacity, approx. (EX)	
Super unleaded (ROZ 95) (📖 p. 130)	8.5 l (2.25 US gal)

Fuel reserve, approx. (EX)	1.5 l (1.6 qt.)

22.4 Chassis

Frame	Central tube frame made of chrome molybdenum steel tubing
Fork	**WP XACT AER**
Suspension travel	
front	310 mm (12.2 in)
rear	300 mm (11.81 in)
Fork offset	22 mm (0.87 in)
Shock absorber	**WP XACT 5750**
Brake system	Disc brakes, floating brake calipers
Brake discs - diameter	
front	260 mm (10.24 in)
rear	220 mm (8.66 in)
Brake discs - wear limit	
front	2.5 mm (0.098 in)
rear	3.5 mm (0.138 in)

Offroad tire pressure	
front	1.0 bar (15 psi)
rear	1.0 bar (15 psi)
Secondary ratio (MC)	14:51
Secondary ratio (EX)	13:51
Chain	5/8 x 1/4"
Available rear sprockets	48, 50, 51, 52
Steering head angle	63.9°
Wheelbase	1,485 ± 10 mm (58.46 ± 0.39 in)
Seat height, unloaded	950 mm (37.4 in)
Ground clearance, unloaded	370 mm (14.57 in)
Weight without fuel, approx. (MC)	99 kg (218 lb.)
Weight without fuel, approx. (EX)	100 kg (220 lb.)
Maximum permissible front axle load	145 kg (320 lb.)
Maximum permissible rear axle load	190 kg (419 lb.)
Maximum permissible overall weight	335 kg (739 lb.)

22.5 Electrical system

12-V battery	HJTZ5S-FP-C	Lithium-ion battery Battery voltage: 12 V Nominal capacity: 2.0 Ah Maintenance-free
Fuse	58011109110	10 A

Malfunction indicator lamp	LED

22.6 Tires

Validity	**Front tire**	**Rear tire**
(MC)	**80/100 - 21 51M TT** MAXXIS MAXXCROSS MX-ST+	**100/90 - 19 57M TT** MAXXIS MAXXCROSS MX-ST+
The tires specified represent one of the possible series production tires. Additional information is available in the Service section under: http://www.gasgas.com		

Validity	**Front tire**	**Rear tire**
(EX)	**80/100 - 21 51M TT** Dunlop GEOMAX AT81F	**110/100 - 18 64M TT** Dunlop GEOMAX AT81
The tires specified represent one of the possible series production tires. Additional information is available in the Service section under: http://www.gasgas.com		

22.7 Fork

22.7.1 MC

Fork article number	A540C109U406000
Fork	**WP XACT AER**
Compression damping	
Comfort	17 clicks
Standard	12 clicks
Sport	7 clicks
Rebound damping	
Comfort	17 clicks
Standard	12 clicks
Sport	7 clicks
Air pressure	10.7 bar (155 psi)
Fork length	950 mm (37.4 in)

Oil capacity external mechanism right	230 $^{+10}_{-50}$ ml (7.78 $^{+0.34}_{-1.69}$ fl. oz.)	Fork oil (SAE 4) (48601166S1) (p. 129)
Oil capacity external mechanism left	230 $^{+10}_{-50}$ ml (7.78 $^{+0.34}_{-1.69}$ fl. oz.)	Fork oil (SAE 4) (48601166S1) (p. 129)
Oil capacity, right cartridge	380 ml (12.85 fl. oz.)	Fork oil (SAE 4) (48601166S1) (p. 129)
Grease capacity, left cartridge	5 g (0.18 oz)	Special grease (00062010053) (p. 132)

22.7.2 EX

Fork article number	A540C179U406000
Fork	**WP XACT AER**
Compression damping	
Comfort	17 clicks
Standard	12 clicks
Sport	7 clicks
Rebound damping	
Comfort	23 clicks
Standard	18 clicks
Sport	13 clicks
Air pressure	10.0 bar (145 psi)
Fork length	950 mm (37.4 in)

Oil capacity external mechanism right	230 $^{+10}_{-50}$ ml (7.78 $^{+0.34}_{-1.69}$ fl. oz.)	Fork oil (SAE 4) (48601166S1) (p. 129)
Oil capacity external mechanism left	230 $^{+10}_{-50}$ ml (7.78 $^{+0.34}_{-1.69}$ fl. oz.)	Fork oil (SAE 4) (48601166S1) (p. 129)
Oil capacity, right cartridge	380 ml (12.85 fl. oz.)	Fork oil (SAE 4) (48601166S1) (p. 129)
Grease capacity, left cartridge	5 g (0.18 oz)	Special grease (00062010053) (p. 132)

22.8 Shock absorber

22.8.1 MC

Shock absorber article number	18.18.7U.09
Shock absorber	**WP XACT 5750**
Lowspeed compression damping	
Comfort	17 clicks
Standard	15 clicks
Sport	13 clicks
Highspeed compression damping	
Comfort	2 turns
Standard	1.5 turns
Sport	1 turn
Rebound damping	
Comfort	17 clicks
Standard	15 clicks
Sport	13 clicks
Spring preload	8 mm (0.31 in)
Spring rate	
Weight of rider: 65 … 75 kg (143 … 165 lb.)	39 N/mm (223 lb/in)
Weight of rider: 75 … 85 kg (165 … 187 lb.)	42 N/mm (240 lb/in)
Weight of rider: 85 … 95 kg (187 … 209 lb.)	45 N/mm (257 lb/in)
Spring length	260 mm (10.24 in)
Gas pressure	10 bar (145 psi)
Static sag	35 mm (1.38 in)
Riding sag	105 mm (4.13 in)
Fitted length	477 mm (18.78 in)

Shock absorber oil	Shock absorber fluid (SAE 2.5) (50180751S1) (p. 130)

22.8.2 EX

Shock absorber article number	18.18.7U.79
Shock absorber	**WP XACT 5750**
Lowspeed compression damping	
Comfort	17 clicks
Standard	15 clicks
Sport	13 clicks
Highspeed compression damping	
Comfort	2.5 turns
Standard	2 turns
Sport	1.5 turns
Rebound damping	
Comfort	17 clicks
Standard	15 clicks
Sport	13 clicks
Spring preload	7 mm (0.28 in)

Spring rate	
Weight of rider: 65 … 75 kg (143 … 165 lb.)	42 N/mm (240 lb/in)
Weight of rider: 75 … 85 kg (165 … 187 lb.)	45 N/mm (257 lb/in)
Weight of rider: 85 … 95 kg (187 … 209 lb.)	48 N/mm (274 lb/in)
Spring length	260 mm (10.24 in)
Gas pressure	10 bar (145 psi)
Static sag	35 mm (1.38 in)
Riding sag	105 mm (4.13 in)
Fitted length	477 mm (18.78 in)

Shock absorber oil	Shock absorber fluid (SAE 2.5) (50180751S1) (📖 p. 130)

22.9 Chassis tightening torques

Screw, air filter box cover	**EJOT PT®** K60x20-Z	3 Nm (2.2 lbf ft)
Screw, combination switch	**EJOT PT®** K50x18 T20	2 Nm (1.5 lbf ft)
Screw, intake air temperature sensor	**EJOT DELTA PT®** 45x12-Z	0.7 Nm (0.52 lbf ft)
Screw, radiator hoses clip		2.4 Nm (1.77 lbf ft)
Fitting, start button	M3	0.4 Nm (0.3 lbf ft)
Fitting, stop button	M3	0.4 Nm (0.3 lbf ft)
Fitting, inlet sleeve to throttle valve body	M4	2.8 Nm (2.07 lbf ft)
Screw, fixed grip	M4	5 Nm (3.7 lbf ft) **Loctite®243™**
Screw, service hour counter	M4	0.8 Nm (0.59 lbf ft)
Spoke nipple, front wheel	M4.5	6 Nm (4.4 lbf ft)
Spoke nipple, rear wheel	M4.5	6 Nm (4.4 lbf ft)
Remaining nuts, chassis	M5	5 Nm (3.7 lbf ft)
Remaining screws, chassis	M5	5 Nm (3.7 lbf ft)
Screw, battery terminal	M5	2.5 Nm (1.84 lbf ft)
Screw, brake line guide on link fork	M5	5 Nm (3.7 lbf ft)
Screw, frame protector	M5	3 Nm (2.2 lbf ft)
Screw, shock absorber adjusting ring	M5	5 Nm (3.7 lbf ft)
Screw, throttle valve body cover	M5	2.6 Nm (1.92 lbf ft)
Nut, cable on starter motor	M6	4 Nm (3 lbf ft)
Nut, throttle cable on throttle valve body	M6	3 Nm (2.2 lbf ft)
Remaining nuts, chassis	M6	10 Nm (7.4 lbf ft)
Remaining screws, chassis	M6	10 Nm (7.4 lbf ft)
Screw, ball joint of push rod on foot brake cylinder	M6	10 Nm (7.4 lbf ft) **Loctite®243™**
Screw, battery support bracket	M6	6 Nm (4.4 lbf ft)
Screw, cable on starter relay	M6	6 Nm (4.4 lbf ft)
Screw, chain guide on link fork	M6	10 Nm (7.4 lbf ft) **Loctite®243™**
Screw, chain sliding guard	M6	6 Nm (4.4 lbf ft) **Loctite®243™**

Screw, front brake disc	M6	14 Nm (10.3 lbf ft) **Loctite®243™**
Screw, fuel tank spoiler on radiator	M6	6 Nm (4.4 lbf ft)
Screw, hand lever	M6	5 Nm (3.7 lbf ft)
Screw, indicator lamp bracket	M6	5 Nm (3.7 lbf ft)
Screw, rear brake disc	M6	14 Nm (10.3 lbf ft) **Loctite®243™**
Screw, throttle grip	M6	5 Nm (3.7 lbf ft)
Fuel connection on fuel tank	M8	15 Nm (11.1 lbf ft)
Nut, foot brake lever stop	M8	20 Nm (14.8 lbf ft)
Nut, rear sprocket screw	M8	35 Nm (25.8 lbf ft) **Loctite®2701™**
Nut, rim lock	M8	12 Nm (8.9 lbf ft)
Remaining nuts, chassis	M8	25 Nm (18.4 lbf ft)
Remaining screws, chassis	M8	25 Nm (18.4 lbf ft)
Screw, bottom triple clamp	M8	15 Nm (11.1 lbf ft)
Screw, chain sliding piece	M8	15 Nm (11.1 lbf ft)
Screw, engine brace on engine	M8x20	25 Nm (18.4 lbf ft) **Loctite®243™**
Screw, engine brace on frame	M8x15	25 Nm (18.4 lbf ft) **Loctite®2701™**
Screw, engine sprocket cover	M8	15 Nm (11.1 lbf ft)
Screw, fork stub	M8	15 Nm (11.1 lbf ft)
Screw, front brake caliper	M8	25 Nm (18.4 lbf ft) **Loctite®243™**
Screw, handlebar clamp	M8	20 Nm (14.8 lbf ft)
Screw, manifold on cylinder head brace	M8	15 Nm (11.1 lbf ft)
Screw, side stand attachment (EX)	M8	33 Nm (24.3 lbf ft) **Loctite®2701™**
Screw, subframe bottom	M8	30 Nm (22.1 lbf ft) **Loctite®2701™**
Screw, subframe top	M8	35 Nm (25.8 lbf ft) **Loctite®2701™**
Screw, top steering stem	M8	20 Nm (14.8 lbf ft) **Loctite®243™**
Screw, top triple clamp	M8	20 Nm (14.8 lbf ft)
Engine carrying screw	M10	60 Nm (44.3 lbf ft)
Remaining nuts, chassis	M10	45 Nm (33.2 lbf ft)
Remaining screws, chassis	M10	45 Nm (33.2 lbf ft)
Screw, bottom shock absorber	M10	60 Nm (44.3 lbf ft) **Loctite®2701™**
Screw, handlebar support	M10	40 Nm (29.5 lbf ft) **Loctite®243™**
Screw, top shock absorber	M10	60 Nm (44.3 lbf ft) **Loctite®2701™**
Nut, fuel pump	M12	15 Nm (11.1 lbf ft)
Nut, angle lever to link fork	M14x1.5	60 Nm (44.3 lbf ft)
Nut, frame on linkage lever	M14x1.5	60 Nm (44.3 lbf ft)
Nut, linkage lever on angle lever	M14x1.5	60 Nm (44.3 lbf ft)

Nut, fork pivot	M16x1.5	100 Nm (73.8 lbf ft)
Screw, front wheel spindle	M20x1.5	35 Nm (25.8 lbf ft)
Screw, top steering head	M20x1.5	12 Nm (8.9 lbf ft)
Screw-in fitting, cooling system	M24x1.5	18 Nm (13.3 lbf ft) **Loctite®243™**
Nut, rear wheel spindle	M25x1.5	80 Nm (59 lbf ft)

Brake fluid DOT 4 / DOT 5.1

Standard/classification
– DOT

Guideline
– Use only brake fluid that complies with the specified standard (see specifications on the container) and that exhibits the corresponding properties.

Recommended supplier
Castrol
– **REACT PERFORMANCE DOT 4**

MOTOREX®
– **Brake Fluid DOT 5.1**

Coolant

Guideline
– Only use high-grade, silicate-free coolant with corrosion inhibitor additive for aluminum motors. Low grade and unsuitable antifreeze causes corrosion, deposits and frothing.
– Do not use pure water as only coolant is able to meet the requirements needed in terms of corrosion protection and lubrication properties.
– Only use coolant that complies with the requirements stated (see specifications on the container) and that has the relevant properties.

Antifreeze protection to at least	−25 °C (−13 °F)

The mixture ratio must be adjusted to the necessary antifreeze protection. Use distilled water if the coolant needs to be diluted.

The use of premixed coolant is recommended.

Observe the coolant manufacturer specifications for antifreeze protection, dilution and miscibility (compatibility) with other coolants.

Recommended supplier
MOTOREX®
– **COOLANT M3.0**

Engine oil (SAE 10W/50)

Standard/classification
– JASO T903 MA2 (📖 p. 133)
– SAE (📖 p. 133) (SAE 10W/50)

Guideline
– Use only engine oils that comply with the specified standards (see specifications on the container) and that possess the corresponding properties.

Fully synthetic engine oil

Recommended supplier
MOTOREX®
– **Cross Power 4T**

Fork oil (SAE 4) (48601166S1)

Standard/classification
– SAE (📖 p. 133) (SAE 4)

Guideline
– Use only oils that comply with the specified standards (see specifications on the container) and that exhibit the corresponding properties.

Shock absorber fluid (SAE 2.5) (50180751S1)

Standard/classification

– SAE (📖 p. 133) (SAE 2.5)

Guideline

– Use only oils that comply with the specified standards (see specifications on the container) and that exhibit the corresponding properties.

Super unleaded (ROZ 95)

Standard/classification

– DIN EN 228 (ROZ 95)

Guideline

– Only use super unleaded fuel that matches or is equivalent to the specified standard.

– Fuel with an ethanol content of up to 10% (E10 fuel) is safe to use.

Info

Do **not** use fuel containing methanol (e.g., M15, M85, M100) or more than 10% ethanol (e.g., E15, E25, E85, E100).

Air filter cleaner

Recommended supplier
MOTOREX®
– **Racing Bio Dirt Remover**

Chain cleaner

Recommended supplier
MOTOREX®
– **Chain Clean**

Fuel additive

Recommended supplier
MOTOREX®
– **Fuel Stabilizer**

High viscosity grease

Recommended supplier
SKF®
– **LGHB 2**

Long-life grease

Recommended supplier
MOTOREX®
– **Bike Grease 2000**

Motorcycle cleaner

Recommended supplier
MOTOREX®
– **Moto Clean**

Off-road chain spray

Recommended supplier
MOTOREX®
– **Chainlube Offroad**

Oil for foam air filter

Recommended supplier
MOTOREX®
– **Racing Bio Liquid Power**

Preserving materials for paints, metal and rubber

Recommended supplier
MOTOREX®
– **Moto Protect**

Silicone spray

Recommended supplier
MOTOREX®
– **Silicone Spray**

Special cleaner for glossy and matte paint finishes, metal and plastic surfaces

Recommended supplier
MOTOREX®
– **Quick Cleaner**

Special grease (00062010053)

Recommended supplier
Klüber Lubrication®
– **KLÜBERFOOD NH1 34-401**

Universal oil spray

Recommended supplier
MOTOREX®
– **Joker 440 Synthetic**

JASO T903 MA2

Different technical development directions required a separate specification for motorcycles – the **JASO T903 MA2** standard.
Earlier, engine oils from the automobile industry were used for motorcycles because there was no separate motorcycle specification.
Whereas long service intervals are demanded for automobile engines, the focus for motorcycle engines is on high performance at high engine speeds.
In most motorcycle engines, the transmission and clutch are lubricated with the same oil.
The **JASO T903 MA2** standard meets these special requirements.

SAE

The SAE viscosity classes were defined by the Society of Automotive Engineers and are used for classifying oils according to their viscosity. The viscosity describes only one property of oil and says nothing about quality.

OBD	On-board diagnosis	Vehicle system, which monitors the specified parameters of the vehicle electronics

Art. no.	Article number
ca.	circa
cf.	compare
e.g.	for example
etc.	et cetera
i.a.	inter alia
no.	number
poss.	possibly

28 LIST OF SYMBOLS

28.1 Yellow and orange symbols

Yellow and orange symbols indicate an error condition that requires prompt intervention. Active driving aids are also represented by yellow or orange symbols.

	Malfunction indicator lamp lights up/flashes orange – The OBD has detected a malfunction in the vehicle electronics.
	Fuel level warning lamp lights up orange – The fuel level has reached the reserve mark.

1

12-V battery
- charging . . . 94
- installing . . . 93
- removing . . . 93
- starting power . . . 22

A

Accessories . . . 9

Air filter
- cleaning . . . 59
- installing . . . 60
- removing . . . 59

Air filter box
- cleaning . . . 59

Air filter box cover
- installing . . . 58
- preparing for securing . . . 60
- removing . . . 57

Air suspension XACT 5548 . . . 33

Antifreeze
- checking . . . 97

Auxiliary substances . . . 9

B

Basic chassis setting
- rider's weight, checking with . . . 33

Blink code . . . 118-119

Brake discs
- checking . . . 76

Brake fluid
- front brake, adding . . . 77
- rear brake, adding . . . 83

Brake fluid level
- front brake, checking . . . 77
- rear brake, checking . . . 82

Brake linings
- front brake, checking . . . 79
- of the front brake, changing . . . 79
- of the rear brake, changing . . . 84
- rear brake, checking . . . 84

C

Capacity
- coolant . . . 99-100, 122
- engine oil . . . 110, 122
- fuel . . . 29, 122

Chain
- checking . . . 69
- cleaning . . . 66

Chain guide
- checking . . . 69

Chain tension
- adjusting . . . 68
- checking . . . 67

Characteristic map of the throttle response
- adjusting . . . 102

Clutch
- fluid level, checking/correcting . . . 73
- fluid, changing . . . 74

Clutch lever . . . 14
- basic position, adjusting . . . 73

Cold start button . . . 17

Compression damping
- fork, adjusting . . . 41

Coolant
- antifreeze and coolant level, checking . . . 97
- draining . . . 98
- level, checking . . . 98
- refilling . . . 99

Cooling system . . . 97

Customer service . . . 9

D

Defined use . . . 6

Diagnostics connector . . . 96

Difficult operating conditions . . . 22
- dry sand . . . 22
- high temperatures . . . 24
- low temperature . . . 24
- muddy surfaces . . . 24
- slow speed . . . 24
- snow . . . 24
- wet sand . . . 23
- wet surfaces . . . 24

E

Engine
- running in . . . 21

Engine number . . . 12

Engine oil
- adding . . . 111
- changing . . . 108

Engine oil level
- checking . . . 107

Engine sprocket
- checking . . . 69

Environment . . . 8

F

Figures . . . 9

Foot brake lever . . . 19
- basic position, adjusting . . . 82
- free travel, checking . . . 81

Fork article number . . . 12

Fork legs
air pressure, adjusting . . . 40
basic setting, checking . . . 39
bleeding . . . 45
compression damping, adjusting . . . 41
dust boots, cleaning . . . 45
installing . . . 47
rebound damping, adjusting . . . 41
removing . . . 46
Fork protector
installing . . . 46
removing . . . 46
Frame
checking . . . 71
Front fender
installing . . . 53
removing . . . 53
Front wheel
installing . . . 88
removing . . . 87
Fuel screen
changing . . . 106
Fuel tank
installing . . . 64
removing . . . 62
Fuel tank filler cap
closing . . . 16
opening . . . 15
Fuel, oils, etc. . . . 9
Fuse
main fuse, changing . . . 95

H

Hand brake lever . . . 14
basic position, adjusting . . . 76
free travel, checking . . . 76
Handlebar position . . . 42
adjusting . . . 43
High-speed compression damping
shock absorber, adjusting . . . 35

I

Idle speed
adjusting . . . 103
Idle speed adjusting screw . . . 18
Implied warranty . . . 9
Indicator lamps
overview . . . 15
Intended use . . . 6

L

Link fork
checking . . . 71
Lower triple clamp
installing . . . 49
removing . . . 48
Low-speed compression damping
shock absorber, adjusting . . . 34

M

Main fuse
changing . . . 95
Main silencer
glass fiber yarn filling, changing . . . 61
installing . . . 61
removing . . . 61
Manufacturer warranty . . . 9
Misuse . . . 6
Motorcycle
cleaning . . . 112
from lift stand, removing . . . 44
with lift stand, raising . . . 44

O

Oil filter
changing . . . 108
Oil screens
cleaning . . . 108
Owner's Manual . . . 8

P

Play in throttle cable
adjusting . . . 101
checking . . . 101
Plug-in stand . . . 19
Preparing for use
advice on preparing for first use . . . 20
checks and maintenance measures when preparing for use . . . 25
Protective clothing . . . 7
Putting into operation
after storage . . . 115

R

Rear sprocket
checking . . . 69
Rear wheel
installing . . . 89
removing . . . 88
Rebound damping
fork, adjusting . . . 41
shock absorber, adjusting . . . 35
Refueling
fuel . . . 29
Riding sag
adjusting . . . 39

Rubber grips
checking 72

S

Safe operation 7
Seat
mounting 57
removing 56
Service 9
Service schedule 30-32
Shift lever 18
basic position, adjusting 105
basic position, checking 105
Shock absorber
compression damping, general 34
high-speed compression damping, adjusting 35
installing 55
low-speed compression damping, adjusting 34
rebound damping, adjusting 35
removing 54
riding sag, checking 37
spring preload, adjusting 38
static sag, checking 37
Shock absorber article number 13
Side stand 19
Spare parts 9
Spoke tension
checking 92
Start button 15
Start number plate
installing 52
removing 52
Starting 25
Starting power of lithium-ion batteries at low temperatures 22
Steering head bearing
lubricating 52
Steering head bearing play
adjusting 51
checking 51
Stop button 14
Storage 114

T

Technical data
capacities 122
chassis 122
chassis tightening torques 126
electrical system 123
engine 120
engine tightening torques 120
fork 124
shock absorber 125
tires 123
Throttle cable routing
checking 71
Throttle grip 14
Throttle valve position
programming 104
Tire condition
checking 91
Tire pressure
checking 91
Transporting 28
Troubleshooting 116-117
Type label 12

V

Vehicle identification number 12
View of vehicle
front left 10
rear right 11

W

Work rules 8

3215010en

10/2020



GASGAS

Stallhofnerstraße 3 / 5230 Mattighofen / Austria / **http://www.gasgas.com**